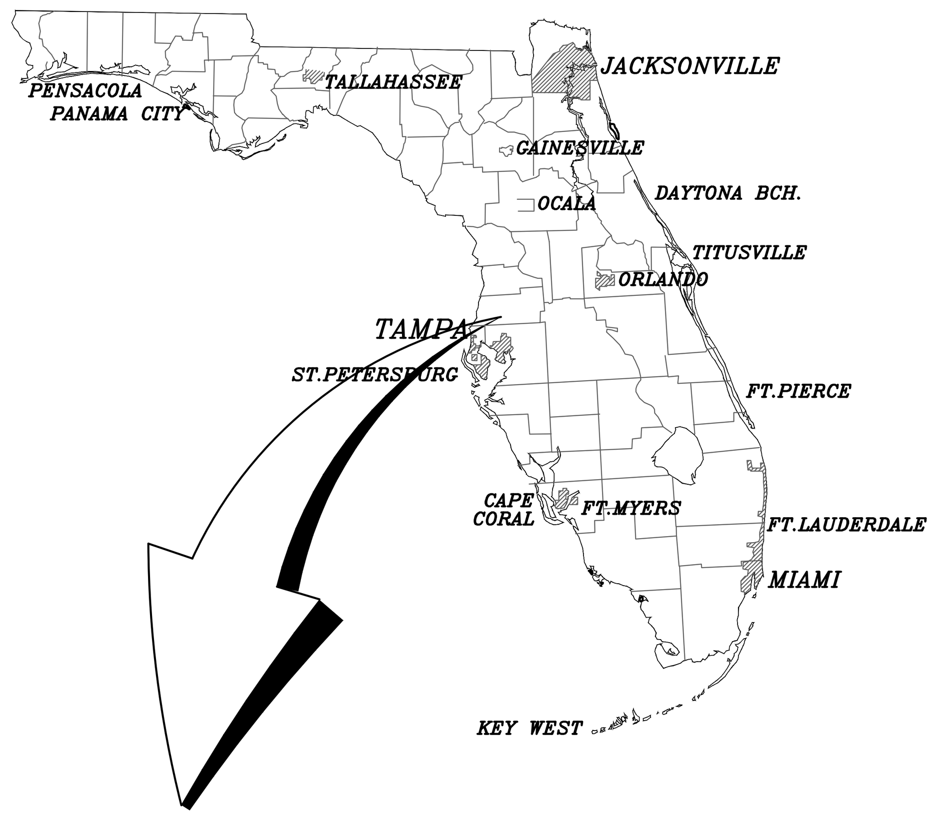

Simultaneous Submittal of Preliminary, Stormwater, Construction & Mass Grading for Future Commercial Plans

FOR

The Villages of Trinity Lakes Subdivision

Pasco County, Florida

PDD APPROVED
6/20/13 A. BOONE
PDD13-844
PP/CP/SW
RSD12-001

PREPARED FOR

Adam Smith Enterprises, Inc.

P.O. BOX 1608
Tarpon Springs, FL 34688-1608

LINCKS & ASSOCIATES, INC.
ENGINEERS PLANNERS
5023 WEST LAUREL STREET
TAMPA, FLORIDA 33607
PH. (813) 289-0039
LIC. No. EB0004638

OWNER :
DANIEL E. ALDRIDGE, VP
ADAM SMITH ENTERPRISES INC
P.O BOX 1608
TARPON SPRINGS, FL 34688
EMAIL: [illegible]

ENGINEER :
DAVID W. DESILET, PE
LINCKS & ASSOCIATES, INC.
5023 W. LAUREL ST.
TAMPA, FLORIDA 33607
PH : (813) 289-0039
EMAIL: DDESILET@LINCKS.COM

SURVEYOR :
DLB SURVEYING, INC.
36420 TERRIER COURT
ZEPHYRHILLS, FLORIDA 33541
PH [illegible]
FAX [illegible]
EMAIL: [illegible]
OWNER/PRESIDENT: DAVID L. BERRY

ZONING:
MPUD NO. #157
MPUD NAME: TRINITY
ORIGINAL MPUD APPROVAL
DATE: 12-28-89

UTILITY CONTACTS

CLEARWATER GAS SYSTEMS
400 N MYRTLE AVE
CLEARWATER, FL 33755

VERIZON FLORIDA INC
PO BOX 110
TAMPA, FL 33601

LEVEL 3 COMMUNICATIONS LLC
1025 ELDORADO BLVD, BLDG 13C04
BROOMFIELD, CO 80021

PASCO COUNTY UTILITIES
7530 LITTLE RD, ROOM 205
NEW PORT RICHEY, FL 34654
727-847-8145 Ext: 8621

TAMPA BAY WATER
2535 LANDMARK DR--SUITE 211
CLEARWATER, FL 33761-3930

PROGRESS ENERGY
JASON MEDLER
1-800-700-8744

BRIGHT HOUSE NETWORKS, LLC
30432 SR 54
WESLEY CHAPEL, FLORIDA 33543
KATHY MCDONALD (727)856-5129 EXT. 84402

PASCO COUNTY UTILITIES CONSTRUCTION AND
CONTRACT MANAGEMENT DEPT.
PUBLIC WORKS/UTILITY BLDG.
7530 LITTLE ROAD, SUITE 205
NEW PORT RICHY, FL 34653
(727) 847-8040

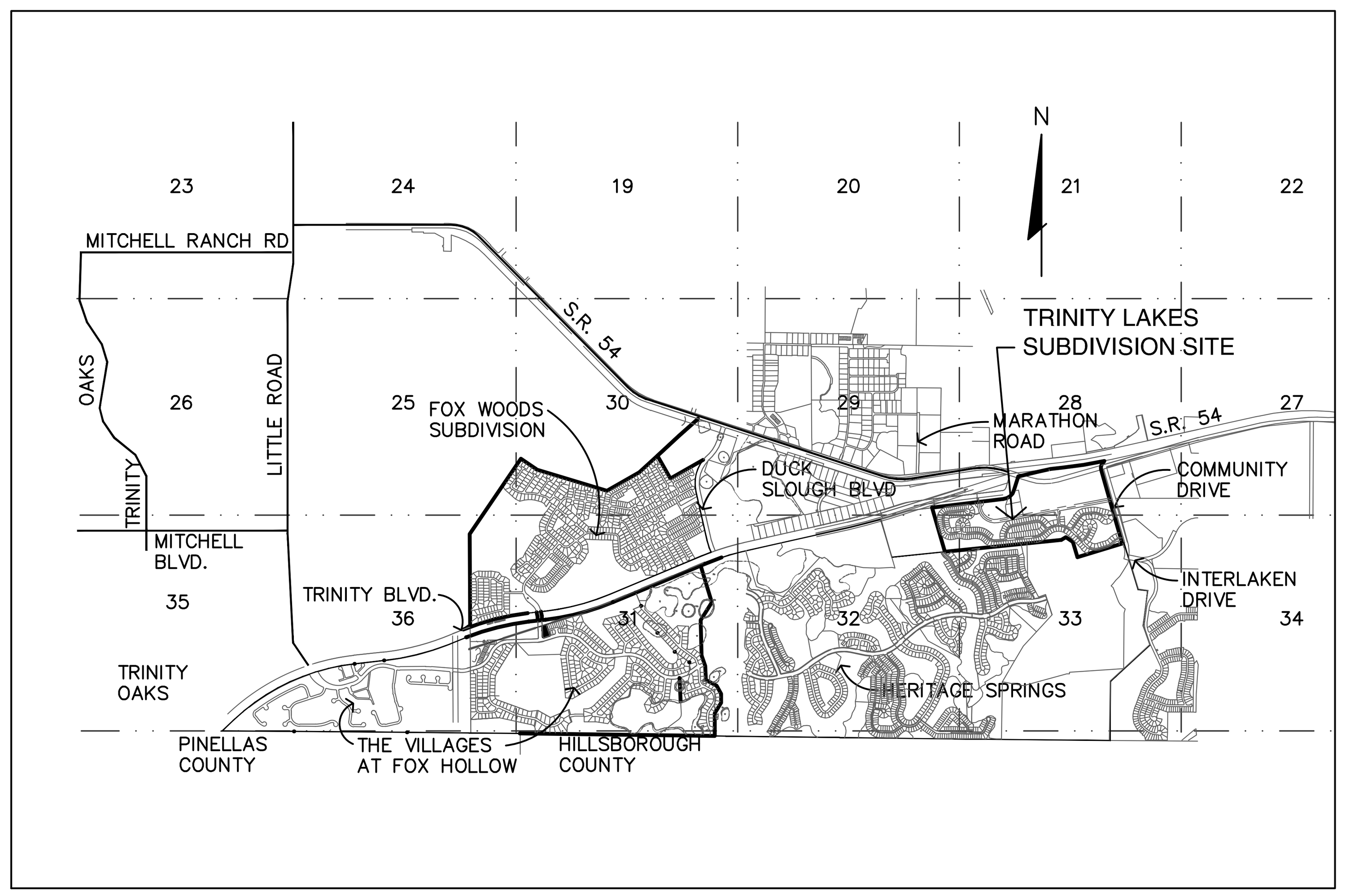

LOCATION MAP

VICINITY MAP

SECTION 28, 29, 32, & 33, TOWNSHIP 26 SOUTH, RANGE 17 EAST

PASCO COUNTY, FLORIDA

LEGAL DESCRIPTION (ENTIRE PARCEL)

A PORTION OF SECTIONS 28, 29, 32, AND 33, TOWNSHIP 26 SOUTH, RANGE 17 EAST, OF PASCO COUNTY, FLORIDA BEING MORE PARTICULARLY DESCRIBED AS FOLLOWS:
COMMENCE AT THE SOUTHWEST CORNER OF SAID SECTION 28, ALSO BEING THE COMMON CORNER WITH SAID SECTIONS 29, 32, AND 33, AND RUN ALONG THE WEST LINE OF SAID SECTION 28, NORTH 00°14'40" EAST, A DISTANCE OF 286.02 FEET TO A POINT ON THE SOUTHERLY RIGHT-OF-WAY LINE OF TRINITY BOULEVARD AS RECORDED IN OFFICIAL RECORD BOOK 5522, PAGE 1932 OF THE PUBLIC RECORDS OF PASCO COUNTY, FLORIDA, SAID POINT ALSO BEING THE POINT OF BEGINNING: THENCE RUN ALONG THE SOUTHERLY RIGHT-OF-WAY LINE OF SAID TRINITY BOULEVARD THE FOLLOWING 3 COURSES: RUN NORTH 83°06'34" EAST, A DISTANCE OF 739.74 FEET TO A POINT OF CURVATURE OF A CURVE TO THE LEFT; THENCE RUN 345.58 FEET ALONG THE ARC OF SAID CURVE TO THE LEFT, HAVING A RADIUS OF 300.00 FEET, A CENTRAL ANGLE OF 66°00'00", AND A CHORD OF 326.78 FEET WHICH BEARS NORTH 50°06'34" EAST; THENCE RUN NORTH 17°06'34" EAST, A DISTANCE OF 333.61 FEET TO A POINT ON THE SOUTHERLY LINE OF A 120 FEET WIDE FORMER ATLANTIC COASTLINE RAILROAD RIGHT-OF-WAY, ALSO BEING THE NEW SOUTHERLY RIGHT-OF-WAY LINE OF STATE ROAD 54 AS RECORDED IN OFFICIAL RECORD BOOK 5919, PAGE 1336 OF THE PUBLIC RECORDS OF PASCO COUNTY, FLORIDA; THENCE RUN ALONG THE SOUTHERLY LINE OF SAID 120 FEET WIDE FORMER ATLANTIC COASTLINE RAILROAD RIGHT-OF-WAY, ALSO BEING THE NEW SOUTHERLY RIGHT-OF-WAY LINE OF SAID STATE ROAD 54 THE FOLLOWING 2 COURSES: RUN 480.55 FEET ALONG THE ARC OF A CURVE TO THE RIGHT, SAID CURVE BEING NON-TANGENT WITH THE LAST DESCRIBED COURSE, HAVING A RADIUS OF 11399.16 FEET, A CENTRAL ANGLE OF 02°24'56", AND A CHORD OF 480.52 FEET WHICH BEARS NORTH 76°28'08" EAST; THENCE RUN NORTH 77°40'36" EAST, A DISTANCE OF 299.61 FEET; THENCE LEAVING THE SOUTHERLY LINE OF SAID 120 FEET WIDE FORMER ATLANTIC COASTLINE RAILROAD RIGHT-OF-WAY CONTINUE ALONG THE NEW SOUTHERLY RIGHT-OF-WAY LINE OF SAID STATE ROAD 54 THE FOLLOWING 2 COURSES: RUN NORTH 83°25'13" EAST, A DISTANCE OF 282.78 FEET TO A POINT OF CURVATURE OF A CURVE TO THE LEFT; THENCE RUN 986.06 FEET ALONG THE ARC OF SAID CURVE TO THE LEFT, HAVING A RADIUS OF 11583.83 FEET, A CENTRAL ANGLE OF 04°52'38", AND A CHORD OF 985.77 FEET WHICH BEARS NORTH 80°58'54" EAST TO A POINT ON THE WESTERLY RIGHT-OF-WAY LINE OF EAST COMMUNITY DRIVE AS RECORDED IN OFFICIAL RECORD BOOK 5891, PAGE 975 AND OFFICIAL RECORD BOOK 4250, PAGE 973 OF THE PUBLIC RECORDS OF PASCO COUNTY, FLORIDA, ALSO BEING A POINT OF CURVATURE OF A CURVE TO THE RIGHT; THENCE RUN ALONG THE WESTERLY RIGHT-OF-WAY LINE OF SAID EAST COMMUNITY DRIVE THE FOLLOWING 4 COURSES: RUN 29.32 FEET ALONG THE ARC OF SAID CURVE TO THE RIGHT, BEING NON-TANGENT WITH THE LAST DESCRIBED COURSE, HAVING A RADIUS OF 120.45 FEET, A CENTRAL ANGLE OF 13°56'53", AND A CHORD OF 29.25 FEET WHICH BEARS SOUTH 32°44'17" WEST; THENCE RUN SOUTH 39°42'44" WEST, A DISTANCE OF 38.76 FEET TO A POINT OF CURVATURE OF A CURVE TO THE LEFT; THENCE RUN 156.92 FEET ALONG THE ARC OF SAID CURVE TO THE LEFT, HAVING A RADIUS OF 161.65 FEET, A CENTRAL ANGLE OF 55°37'08", AND A CHORD OF 150.83 FEET WHICH BEARS SOUTH 11°54'10" WEST; THENCE RUN SOUTH 15°54'24" EAST, A DISTANCE OF 973.94 FEET TO THE NORTHWEST CORNER OF TRINITY EAST REPLAT, AS RECORDED IN PLAT BOOK 56, PAGES 2 THROUGH 15, OF THE PUBLIC RECORDS OF PASCO COUNTY, FLORIDA; THENCE RUN ALONG THE WESTERLY BOUNDARY LINE OF SAID TRINITY EAST REPLAT, ALSO BEING THE WESTERLY RIGHT-OF-WAY LINE OF SAID EAST COMMUNITY DRIVE, SOUTH 15°54'24" EAST, A DISTANCE OF 827.94 FEET TO A POINT ON THE NORTHERLY BOUNDARY LINE OF HERITAGE SPRINGS; THENCE LEAVING THE WESTERLY RIGHT-OF-WAY LINE OF SAID EAST COMMUNITY DRIVE RUN ALONG THE NORTHERLY BOUNDARY LINE OF SAID HERITAGE SPRINGS AS RECORDED IN OFFICIAL RECORD BOOK 6225, PAGE 99 OF THE PUBLIC RECORDS OF PASCO COUNTY, FLORIDA THE FOLLOWING 4 COURSES: RUN SOUTH 73°04'09" WEST, A DISTANCE OF 1095.00 FEET; THENCE RUN NORTH 16°54'16" WEST, DISTANCE OF 372.40 FEET; THENCE RUN NORTH 55°49'00" WEST, A DISTANCE OF 200.34 FEET; THENCE RUN SOUTH 59°15'43" WEST, A DISTANCE OF 124.87 FEET; THENCE CONTINUE TO RUN ALONG THE NORTHERLY BOUNDARY LINE OF SAID HERITAGE SPRINGS, ALSO BEING THE NORTHERLY BOUNDARY LINE OF HERITAGE SPRINGS VILLAGE 23 UNIT 2, AS RECORDED IN PLAT BOOK 50, PAGES 17 THROUGH 23, AND HERITAGE SPRINGS VILLAGE 22, AS RECORDED IN PLAT BOOK 47, PAGES 137 THROUGH 140, OF THE PUBLIC RECORDS OF PASCO COUNTY, FLORIDA, SOUTH 84°11'20" WEST, A DISTANCE OF 2737.29 FEET TO A POINT ON THE EASTERLY RIGHT-OF-WAY LINE OF THE EXTENSION OF LAKESTONE DRIVE, AN 80.00 FEET WIDE ROAD RIGHT-OF-WAY; THENCE RUN ALONG THE EASTERLY RIGHT-OF-WAY LINE OF SAID EXTENSION OF LAKESTONE DRIVE THE FOLLOWING 2 COURSES: RUN 44.55 FEET ALONG THE ARC OF A CURVE TO THE RIGHT, SAID CURVE BEING NON-TANGENT WITH THE LAST DESCRIBED COURSE, HAVING A RADIUS OF 260.00 FEET, A CENTRAL ANGLE OF 09°49'06", AND A CHORD OF 44.50 FEET WHICH BEARS NORTH 21°10'51" WEST; THENCE RUN NORTH 16°16'18" WEST, A DISTANCE OF 1031.96 FEET TO A POINT ON THE SOUTHERLY RIGHT-OF WAY LINE OF SAID TRINITY BOULEVARD; THENCE RUN ALONG THE SOUTHERLY RIGHT-OF-WAY LINE OF SAID TRINITY BOULEVARD, NORTH 83°06'34" EAST, A DISTANCE OF 944.35 FEET TO THE POINT OF BEGINNING. CONTAINING 138.745 ACRES MORE OR LESS.

LEGAL DESCRIPTION: PARCEL "A" (PLAT BOUNDARY)

A PORTION OF SECTIONS 28, 29, 32, AND 33, TOWNSHIP 26 SOUTH, RANGE 17 EAST, OF PASCO COUNTY, FLORIDA BEING MORE PARTICULARLY DESCRIBED AS FOLLOWS:
COMMENCE AT THE SOUTHWEST CORNER OF SAID SECTION 28, ALSO BEING THE COMMON CORNER WITH SAID SECTIONS 29, 32, AND 33, AND RUN ALONG THE WEST LINE OF SAID SECTION 28, NORTH 00°14'40" EAST, A DISTANCE OF 286.02 FEET TO A POINT ON THE SOUTHERLY RIGHT-OF-WAY LINE OF TRINITY BOULEVARD AS RECORDED IN OFFICIAL RECORD BOOK 5522, PAGE 1932 OF THE PUBLIC RECORDS OF PASCO COUNTY, FLORIDA, SAID POINT ALSO BEING THE POINT OF BEGINNING: THENCE RUN ALONG THE SOUTHERLY RIGHT-OF-WAY LINE OF SAID TRINITY BOULEVARD THE FOLLOWING 2 COURSES: RUN NORTH 83°06'34" EAST, A DISTANCE OF 739.74 FEET TO A POINT OF CURVATURE OF A CURVE TO THE LEFT; THENCE RUN 326.64 FEET ALONG THE ARC OF SAID CURVE TO THE LEFT, HAVING A RADIUS OF 300.00 FEET, A CENTRAL ANGLE OF 62°23'03", AND A CHORD OF 310.75 FEET WHICH BEARS NORTH 51°55'02" EAST; THENCE LEAVING THE SOUTHERLY RIGHT-OF-WAY LINE OF SAID TRINITY BOULEVARD, RUN NORTH 79°17'50" EAST, A DISTANCE OF 334.39 FEET; THENCE RUN SOUTH 10°42'10" EAST, A DISTANCE OF 580.49 FEET; THENCE RUN NORTH 79°17'50" EAST, A DISTANCE OF 1832.28 FEET TO A POINT ON THE WESTERLY RIGHT-OF-WAY LINE OF COMMUNITY DRIVE AS RECORDED IN OFFICIAL RECORD BOOK 5891, PAGE 975 AND OFFICIAL RECORD BOOK 4250, PAGE 973 OF THE PUBLIC RECORDS OF PASCO COUNTY, FLORIDA; THENCE RUN ALONG THE WESTERLY RIGHT-OF-WAY LINE OF SAID COMMUNITY DRIVE, SOUTH 15°54'24" EAST, A DISTANCE OF 281.37 FEET TO THE NORTHWEST CORNER OF TRINITY EAST REPLAT, AS RECORDED IN PLAT BOOK 56, PAGES 2 THROUGH 15, OF THE PUBLIC RECORDS OF PASCO COUNTY, FLORIDA; THENCE RUN ALONG THE WESTERLY BOUNDARY LINE OF SAID TRINITY EAST REPLAT, ALSO BEING THE WESTERLY RIGHT-OF-WAY LINE OF SAID COMMUNITY DRIVE, SOUTH 15°54'24" EAST, A DISTANCE OF 827.94 FEET TO A POINT ON THE NORTHERLY BOUNDARY LINE OF TRINITY PRESERVE PHASE 1; THENCE LEAVING THE WESTERLY RIGHT-OF-WAY LINE OF SAID COMMUNITY DRIVE RUN ALONG THE NORTHERLY BOUNDARY LINE OF SAID TRINITY PRESERVE PHASE 1 AS RECORDED IN PLAT BOOK 67, PAGES 101 THROUGH 119 OF THE PUBLIC RECORDS OF PASCO COUNTY, FLORIDA THE FOLLOWING 4 COURSES: RUN SOUTH 73°04'09" WEST, A DISTANCE OF 1095.00 FEET; THENCE RUN NORTH 16°54'16" WEST, A DISTANCE OF 372.40 FEET; THENCE RUN NORTH 55°49'00" WEST, A DISTANCE OF 200.34 FEET; THENCE RUN SOUTH 59°15'43" WEST, A DISTANCE OF 124.87 FEET; THENCE CONTINUE TO RUN ALONG THE NORTHERLY BOUNDARY LINE OF SAID TRINITY PRESERVE PHASE 1, ALSO BEING THE NORTHERLY BOUNDARY LINE OF HERITAGE SPRINGS VILLAGE 23

LEGAL DESCRIPTION: (PLAT BOUNDARY)

UNIT 2, AS RECORDED IN PLAT BOOK 50, PAGES 17 THROUGH 23, AND HERITAGE SPRINGS VILLAGE 22, AS RECORDED IN PLAT BOOK 47, PAGES 137 THROUGH 140, OF THE PUBLIC RECORDS OF PASCO COUNTY, FLORIDA, SOUTH 84°11'20" WEST, A DISTANCE OF 2737.29 FEET; THENCE LEAVING SAID NORTHERLY BOUNDARY LINE, RUN 44.55 FEET ALONG THE ARC OF A CURVE TO THE RIGHT, SAID CURVE BEING NON-TANGENT WITH THE LAST DESCRIBED COURSE, HAVING A RADIUS OF 260.00 FEET, A CENTRAL ANGLE OF 09°49'06", AND A CHORD OF 44.50 FEET WHICH BEARS NORTH 21°10'51" WEST; THENCE RUN NORTH 16°16'18" WEST, A DISTANCE OF 1031.96 FEET TO A POINT ON THE SOUTHERLY RIGHT-OF WAY LINE OF SAID TRINITY BOULEVARD; THENCE RUN ALONG THE SOUTHERLY RIGHT-OF-WAY LINE OF SAID TRINITY BOULEVARD, NORTH 83°06'34" EAST, A DISTANCE OF 944.35 FEET TO THE POINT OF BEGINNING. CONTAINING 99.767 ACRES MORE OR LESS.

TOGETHER WITH

PARCEL "B"

A PORTION OF SECTIONS 28, 29, 32, AND 33, TOWNSHIP 26 SOUTH, RANGE 17 EAST, OF PASCO COUNTY, FLORIDA BEING MORE PARTICULARLY DESCRIBED AS FOLLOWS:
COMMENCE AT THE SOUTHWEST CORNER OF SAID SECTION 28, ALSO BEING THE COMMON CORNER WITH SAID SECTIONS 29, 32, AND 33, AND RUN ALONG THE WEST LINE OF SAID SECTION 28, NORTH 00°14'40" EAST, A DISTANCE OF 286.02 FEET TO A POINT ON THE SOUTHERLY RIGHT-OF-WAY LINE OF TRINITY BOULEVARD AS RECORDED IN OFFICIAL RECORD BOOK 5522, PAGE 1932 OF THE PUBLIC RECORDS OF PASCO COUNTY, FLORIDA; THENCE RUN ALONG THE SOUTHERLY RIGHT-OF-WAY LINE OF SAID TRINITY BOULEVARD THE FOLLOWING 2 COURSES: RUN NORTH 83°06'34" EAST, A DISTANCE OF 739.74 FEET TO A POINT OF CURVATURE OF A CURVE TO THE LEFT; THENCE RUN 326.64 FEET ALONG THE ARC OF SAID CURVE TO THE LEFT, HAVING A RADIUS OF 300.00 FEET, A CENTRAL ANGLE OF 62°23'03", AND A CHORD OF 310.75 FEET WHICH BEARS NORTH 51°55'02" EAST; THENCE LEAVING THE SOUTHERLY RIGHT-OF-WAY LINE OF SAID TRINITY BOULEVARD, RUN NORTH 79°17'50" EAST, A DISTANCE OF 334.39 FEET; THENCE RUN SOUTH 10°42'10" EAST, A DISTANCE OF 580.49 FEET; THENCE RUN NORTH 79°17'50" EAST, A DISTANCE OF 1832.28 FEET TO A POINT ON THE WESTERLY RIGHT-OF-WAY LINE OF COMMUNITY DRIVE AS RECORDED IN OFFICIAL RECORD BOOK 5891, PAGE 975 AND OFFICIAL RECORD BOOK 4250, PAGE 973 OF THE PUBLIC RECORDS OF PASCO COUNTY, FLORIDA; THENCE RUN ALONG THE WESTERLY RIGHT-OF-WAY LINE OF SAID COMMUNITY DRIVE, NORTH 15°54'24" WEST, A DISTANCE OF 692.57 FEET TO THE POINT OF BEGINNING; THENCE LEAVING THE WESTERLY RIGHT-OF-WAY LINE OF SAID COMMUNITY DRIVE, RUN NORTH 15°54'24" WEST, A DISTANCE OF 184.97 FEET TO THE NEW SOUTHERLY RIGHT-OF-WAY LINE OF STATE ROAD 54 AS RECORDED IN OFFICIAL RECORD BOOK 5919, PAGE 1336 OF THE PUBLIC RECORDS OF PASCO COUNTY, FLORIDA, SAID POINT ALSO BEING A POINT OF CURVATURE OF A CURVE TO THE LEFT; THENCE RUN ALONG THE SOUTHERLY RIGHT-OF-WAY LINE OF SAID NEW STATE ROAD 54, 124.74 FEET ALONG THE ARC OF SAID CURVE TO THE LEFT, BEING NON-TANGENT WITH THE LAST DESCRIBED COURSE, HAVING A RADIUS OF 11583.83 FEET, A CENTRAL ANGLE OF 00°37'01", AND A CHORD OF 124.74 FEET WHICH BEARS NORTH 78°51'06" EAST TO A POINT ON THE WESTERLY RIGHT-OF-WAY LINE OF SAID COMMUNITY DRIVE ALSO BEING A POINT OF CURVATURE OF A CURVE TO THE RIGHT; THENCE RUN ALONG THE WESTERLY RIGHT-OF-WAY LINE OF SAID COMMUNITY DRIVE THE FOLLOWING 3 COURSES; RUN 29.32 FEET ALONG THE ARC OF SAID CURVE TO THE RIGHT, BEING NON-TANGENT WITH THE LAST DESCRIBED COURSE, HAVING A RADIUS OF 120.45 FEET, A CENTRAL ANGLE OF 13°56'53", AND A CHORD OF 29.25 FEET WHICH BEARS SOUTH 32°44"17" WEST; THENCE RUN SOUTH 39°42'44" WEST, A DISTANCE OF 38.76 FEET TO A POINT OF CURVATURE OF A CURVE TO THE LEFT; THENCE RUN 156.92 FEET ALONG THE ARC OF SAID CURVE TO THE LEFT, HAVING A RADIUS OF 161.65 FEET, A CENTRAL ANGLE OF 55°37'08", AND A CHORD OF 150.83 FEET WHICH BEARS SOUTH 11°54'10" WEST TO THE POINT OF BEGINNING. CONTAINING 0.173 ACRE MORE OR LESS.

MUMS STATEMENT

THESE PLANS HAVE BEEN PREPARED IN ACCORDANCE WITH THE CURRENT VERSION OF THE MANUAL OF UNIFORM MINIMUM STANDARDS FOR DESIGN, CONSTRUCTION AND MAINTENANCE FOR STREETS AND HIGHWAYS, STATE OF FLORIDA AND ARE IN COMPLIANCE WITH THE STANDARDS. ANY DEVIATIONS NOTED IN THE PLANS SUBSTANTIALLY COMPLY WITH THE INTENT OF THE STANDARDS.

Signature of Engineer
(SEAL) FLORIDA P.E. NO.:
DATE:

INDEX

C1	Cover Sheet	C41-42	Pond & Control Structure Details
C2	General Notes	C43	Commercial Mass Grading Plan
C2B	Utility Notes	C44	SWPPP
C3	Preliminary Plan	C45	SWPPP Notes
C4	Key Map & Boring Location Map		
C5	Stormwater Basin Map	L1-L5	Landscape Plans
C6-9	Signing, Marking & Geometry Plan		
C10-13	Grading Plan		
C14-17	Drainage Plan		
C18	Master Utility Plan		
C19-23	Utility Plan		
C24-25	Offsite Roadway Improvement Plan		
C26-27	Offsite Signing & Marking Plan		
C28-31	Roadway Profiles		
C32-33	Drainage / Roadway Details		
C34	SWPPP Details		
C35-40	Utility (Water & Sewer) Details		

DATE: 01/26/2012
REVISION
08/01/2012
11/20/2012
12/12/2012
01/08/2013
01/29/2013
03/04/2013
06/12/2013

SIGNED:
DAVID W. DESILET
FLA P.E. No.
24760

JOB NO: 10087
SHEET
C1

D:\Work\10087_Trinity_Lakes\10087_CV.dwg, Layout C1
Date: 06/14/13 Drawing: 10087_CV.dwg

GENERAL NOTES:

1. THE CONTRACTOR SHALL VERIFY CONTROL POINTS FOR LINE AND GRADE PRIOR TO CONSTRUCTION.
2. LOCATION, ELEVATION, AND DIMENSIONS OF EXISTING UTILITIES, STRUCTURES, AND OTHER FEATURES ARE SHOWN IN ACCORDANCE WITH THE BEST INFORMATION AVAILABLE AT TIME OF THE PREPARATION OF THESE PLANS BUT DO NOT PURPORT TO BE ABSOLUTELY CORRECT.
3. THE CONTRACTOR SHALL VERIFY THE LOCATION, ELEVATION, AND DIMENSIONS OF ALL EXISTING UTILITIES, STRUCTURES, AND OTHER FEATURES AFFECTING HIS WORK AND SHALL COMPLY WITH ALL STATE, COUNTY, AND LOCAL ORDINANCES AND OBTAIN ANY NECESSARY WORK PERMITS THAT MAY BE REQUIRED PRIOR TO CONSTRUCTION.
4. THE CONTRACTOR SHALL BE RESPONSIBLE FOR THE COMPLETE COORDINATION OF CONSTRUCTION SCHEDULING BETWEEN THE CONTRACTOR AND ALL UTILITY AGENCIES. THE CONTRACTOR SHALL ADJUST HIS SCHEDULE TO COINCIDE WITH OTHER REQUIRED UTILITIES.
5. THE ENGINEER RESERVES THE RIGHT TO PERFORM QUALITY ASSURANCE TESTING ON ALL MATERIALS DELIVERED TO PROJECT.
6. IN THE EVENT UNSUITABLE MATERIAL IS ENCOUNTERED DURING EXCAVATION IT IS TO BE REMOVED FROM THE SITE EXCEPT THAT IT MAY BE USED TO FLATTEN SLOPES IN AREAS APPROVED BY THE ENGINEERS.
7. OVERALL CLEANUP SHALL BE ACCOMPLISHED BY THE CONTRACTOR IN ACCORDANCE WITH COUNTY, CITY AND/OR FDOT STANDARDS OR AS DIRECTED BY THE ENGINEER. ANY AND ALL EXPENSES INCURRED FOR THIS WORK SHALL BE INCLUDED IN THE UNIT PRICE BID FOR OTHER ITEMS.
8. THE CONTRACTOR SHALL ENDEAVOR TO PROTECT PRIVATE PROPERTY. ANY DAMAGE CAUSED BY THE CONTRACTOR IN THE PERFORMANCE OF HIS WORK SHALL BE CORRECTED TO THE SATISFACTION OF THE ENGINEER AT THE CONTRACTOR'S EXPENSE. PAYMENT SHALL NOT BE MADE FOR THIS WORK.
9. ANY DAMAGE TO STATE, COUNTY, OR LOCAL ROADS CAUSED BY THE CONTRACTOR'S EQUIPMENT AND OPERATORS SHALL BE REPAIRED BY THE CONTRACTOR TO THE SATISFACTION OF THE ENGINEER. PAYMENT SHALL NOT BE MADE FOR THIS WORK.
10. ANY U.S.C. AND G.S. MONUMENT WITHIN LIMITS OF CONSTRUCTION SHALL BE PROTECTED BY THE CONTRACTOR. IF IN DANGER OF DAMAGE, THE CONTRACTOR SHALL NOTIFY:

    FLORIDA'S STATE GEODETIC ADVISOR
    RONNIE L. TAYLOR AND RANDY MEGNER
    C/O FLDEP, BUREAU OF SURVEY AND MAPPING, MS 105
    3900 COMMONWEALTH BLVD.
    TALLAHASSEE, FL 32399
    TELEPHONE: (850) 245-2606
    FAX: (850) 245-2645
    (HTTP://WWW.NGS.NOAA.GOV/ADVISORS/FLORIDA.SHTML)

11. CONSTRUCTION OF POTABLE WATER AND SANITARY SEWAGE SYSTEMS ARE TO INCLUDE CONNECTION TO EXISTING FACILITIES AS SHOWN.
12. SIDEWALKS ARE TO BE CONSTRUCTED IN ACCORDANCE WITH THE PASCO CO. AND/OR FDOT REQUIREMENTS.
13. WHEREVER MATERIAL OR CONSTRUCTION ITEM SPECIFICATIONS ARE NOT SPECIFICALLY COVERED BY THESE PLANS, PASCO COUNTY, FLORIDA, OR DIRECTED BY THE ENGINEER, "THE FLORIDA DEPARTMENT OF TRANSPORTATION STANDARD SPECIFICATIONS FOR ROAD AND BRIDGE CONSTRUCTION" LATEST EDITION, SHALL APPLY.
14. COMPACTION FOR PIPE BACKFILL SHALL COMPLY WITH AASHTO AND PASCO COUNTY.
15. ALL STREET AND STORM SEWER CONSTRUCTION TO BE IN ACCORDANCE WITH THE CURRENT PASCO CO. STANDARDS AND SPECIFICATIONS. ALL WATER, SANITARY SEWER AND WASTEWATER FACILITIES CONSTRUCTION SHALL BE IN ACCORDANCE WITH ALOHA UTILITIES/FGUA STANDARDS AND SPECIFICATIONS.
16. FLORIDA STATUTE REQUIRES A MINIMUM OF 2 DAYS AND A MAXIMUM OF 5 DAYS NOTICE BEFORE A CONTRACTOR MAY EXCAVATE. THE CONTRACTOR SHALL CALL SUNSHINE 1-800 432-4770 BEFORE EXCAVATION SHALL COMMENCE.
17. ALL FILL UP TO THE SPRING LINE OF THE PIPE MUST BE HAND TAMPED.
18. CONTRACTOR SHALL SUBMIT TO THE ENGINEER AND/OR ARCHITECT FOR REVIEW, 5 COPIES OF SHOP DRAWINGS ON BID ITEMS (FIRE HYDRANTS, VALVES, PIPES, INLETS, MANHOLES, PUMPS, CONTROL PANELS, LIGHT FIXTURES, PLUMBING FIXTURES, ETC.). THE CONTRACTOR SHALL ALLOW A MINIMUM OF 5 DAYS FOR REVIEW OF SHOP DRAWINGS. APPROVAL OF SHOP DRAWINGS IS REQUIRED PRIOR TO INSTALLATION OR CONSTRUCTION. SUBSTITUTION OF SPECIFIED ITEMS, IF REQUESTED, WILL BE EVALUATED BY THE PROJECT ENGINEER.
19. THE CONTRACTOR SHALL SELECT A LOCAL TESTING LABORATORY FOR ON SITE TESTS, SUCH AS: CONCRETE STRENGTH, SLUMP, DENSITIES OR LBR OF ROADBEDS, ETC... COPIES OF ALL TESTS SHALL BE SENT TO THE ENGINEER AND/OR ARCHITECT WITHIN 10 DAYS OF THE TESTS. ALL TESTS WILL BE AT THE EXPENSE OF THE CONTRACTOR. THE CONTRACTOR SHALL PERFORM TESTING ON ALL DRIVEWAYS IN ACCORDANCE WITH PASCO COUNTY AND F.D.O.T., TESTING REQUIREMENTS.
20. THE CONTRACTOR SHALL CONTACT THE ENGINEER'S OFFICE IMMEDIATELY ON ANY CONFLICTS BETWEEN WHAT IS SHOWN HEREIN AND ACTUAL CONDITION DISCOVERED DURING CONSTRUCTION OF ANY IMPROVEMENTS SHOWN ON THE DRAWINGS.
21. PRIOR TO BEGINNING WORK, THE CONTRACTOR SHALL EXPOSE ALL EXISTING UTILITIES TO BE EXTENDED OR CROSSED. ANY CONFLICTS AND THE CONTRACTOR'S PROPOSED RESOLUTIONS SHALL BE BROUGHT TO THE ENGINEER'S ATTENTION FOR APPROVAL.
22. ALL PRACTICABLE EFFORT SHALL BE TAKEN DURING CONSTRUCTION TO CONTROL AND PREVENT EROSION AND TRANSPORT OF SEDIMENT MATERIALS TO INLETS, SURFACE DRAINS, WETLANDS AND LAKE AREAS. THE CONTRACTOR SHALL BE RESPONSIBLE FOR ALL RESTORATION EFFORTS THAT MAY BE REQUIRED.
23. THE CONTRACTOR IS TO CONTROL ALL FUGITIVE DUST ORIGINATING ON THIS PROJECT BY WATERING OR OTHER METHODS AS REQUIRED.
24. THE CONTRACTOR SHALL NOT ENTER UPON OR IN ANY WAY ALTER THE WETLAND/CONSERVATION AREAS THAT MAY BE ON SITE. ALL WORK IN THE VICINITY OF OPEN WATER AND/OR WETLANDS IS TO BE PERFORMED IN COMPLIANCE WITH THE ENVIRONMENTAL REGULATIONS AND/OR PERMITS FOR THE SITE. THE CONTRACTOR WILL BE RESPONSIBLE FOR ANY FINE RESULTING FROM HIS VIOLATION OF ANY REGULATIONS OR PERMIT CONDITIONS.
25. ALL DISTURBED AREAS SHALL BE SODDED, UNLESS OTHERWISE NOTED, AFTER REGRADING.
26. IT IS THE RESPONSIBILITY OF THE CONTRACTOR TO ESTABLISH IN THE FIELD RIGHT OF WAY LINES, BASE LINES, BENCH MARKS (ELEV.), CENTER LINES, AND STATIONING AS REQUIRED TO CONSTRUCT THIS PROJECT.
27. CONTRACTOR SHALL COORDINATE AND REIMBURSE THE APPROPRIATE OVERHEAD UTILITY COMPANY FOR REQUIRED SUPPORT OF UTILITY POLES WHERE CONSTRUCTION MAY CAUSE THE POLE TO LOSE ITS SELF SUPPORTING ABILITY.
28. SPECIAL PIPE FOUNDATIONS, IF REQUIRED, SHALL BE DETERMINED IN THE FIELD AND THE TYPE REQUIRED WILL BE AS DIRECTED BY THE ENGINEER.
29. FINISHED GRADE FOR GROUND ELEVATIONS ON DRAWINGS REFER TO GRADE AFTER SODDING.
30. ALL ELEVATIONS ARE NGVD (1929).
31. ALL EXISTING DRAINAGE STRUCTURES WITHIN THE RIGHT-OF-WAY SHALL REMAIN UNLESS SHOWN ON THE PLANS TO BE REMOVED.
32. THE CONTRACTOR SHALL BE RESPONSIBLE FOR IMPLEMENTING AND MAINTAINING MEASURES TO MITIGATE ADVERSE IMPACT OFF-SITE. THE CONTRACTOR SHALL PROVIDE EROSION AND SEDIMENT CONTROL WHERE SHOWN ON THE PLANS AND WHERE NECESSARY. BALED HAY OR STRAW BARRIERS AND SILT FENCE SHALL BE PROVIDED PER FDOT INDEX NO. 102.
33. CONTRACTOR TO RAISE ALL VALVE BOXES AND MANHOLES AS NEEDED DUE TO CONSTRUCTION.
34. THE STORAGE OF MATERIALS, SOIL OR HEAVY EQUIPMENT SHALL NOT BE PERMITTED IN AREAS IN OR ADJACENT TO TREE BARRICADES. THE LANDSCAPE PLAN AND TREE PROTECTION PLAN FOR ADDITIONAL TREE PROTECTION DETAILS.
35. REFER TO LANDSCAPE PLAN FOR GUIDELINES AND RESTRICTIONS FOR WORK NEAR EXISTING TREES, AND FOR PRUNING TECHNIQUES AND EQUIPMENT.
36. EXISTING CONTOURS ARE BASED UPON THE DIGITAL COAST, 2004 SWFWMD LIDAR MAPS FOR PASCO COUNTY. BASED UPON NGVD 1929 DATUM.
37. THE ENTIRE SITE IS WITHIN ZONE "X" (NO ESTABLISHED FLOOD ELEVATION), PER THE FIRM COMMUNITY PANEL #120230 0360 D, DATED SEPT 30, 1992. ELEVATIONS ON THE FIRM PANEL ARE BASED UPON NGVD 1929 DATUM.
38. BENCHMARKS PROVIDED BY BERRY LAND SURVEYING:

    NGS Benchmark U-668
    Lat. N 28°11'25"
    Long. W 82°36'49"
    N 427446.920m E 139753.318m
    Elev. 40.67' in NAVD 88 Datum
    Elev. 41.51' Converted to NGVD 29 Datum

    NGS Benchmark V-668
    Lat. N 28°11'32"
    Long. W 82°36'05"
    N 427656.392m E 140954.436m
    Elev. 54.64' in NAVD 88 Datum
    Elev. 55.48' Converted to NGVD 29 Datum

RIGHT-OF-WAY NOTES
ALL WORK PERFORMED WITHIN THE PASCO COUNTY R/W SHALL CONFORM TO:

1. FDOT STANDARD SPECIFICATIONS FOR ROAD AND BRIDGE CONSTRUCTION (2006) (A.K.A. STANDARD SPECS)
2. FDOT DESIGN STANDARDS FOR DESIGN, CONSTRUCTION, MAINTENANCE AND OPERATIONS ON THE STATE HIGHWAY SYSTEM, JAN., 2006, (A.K.A. STANDARD INDEX). COMPLIANCE WITH ALL APPLICABLE INDICES IS REQUIRED.
3. FLORIDA DEPARTMENT OF TRANSPORTATION ROADWAY PLANNING PREPARATION MANUAL, VOLUME 1, CHAPTERS 2 AND 25. (REVISED 2007)
4. FLORIDA DEPARTMENT OF TRANSPORTATION FLEXIBLE PAVEMENT DESIGN MANUAL FOR NEW CONSTRUCTION AND PAVEMENT REHABILITATION, JANUARY 2005.
5. ALL TRAFFIC STRIPES AND MARKINGS ARE TO BE LEAD-FREE, NON-SOLVENT BASED THERMOPLASTIC. THE PERMITTEE SHALL FURNISH THE DEPARTMENT WITH THE MANUFACTURER'S CERTIFICATION THAT THE THERMOPLASTIC IS "LEAD FREE."
6. SIDEWALKS SHALL BE CONSTRUCTED PER FDOT INDEX 304 AND 310. DETECTABLE WARNING STRIPS, A.K.A. TRUNCATED DOMES, FOR DISTRICT SEVEN CONSTRUCTION AND MAINTENANCE SHOULD BE EITHER INSET CERAMIC TILES OR THERMOPLASTIC DETECTABLE WARNING STRIPS. THESE WARNING SURFACES SHALL ONLY BE PROVIDED BY THE FOLLOWING VENDORS/MANUFACTURERS OR AS APPROVED BY THE ENGINEER.
   1. INLINE TRUNCATED DOME EZ TILE SUPPLIED BY PROFESSIONAL PAVEMENT PRODUCTS
   2. TOPMARK SUPPLIED BY FLINT TRADING
   3. VANGUARD TRUNCATED DOME SUPPLIED BY VANGUARD

7. MAINTENANCE OF TRAFFIC SHALL CONFORM TO FDOT INDICES 600, 612, 613, 614, 616, 630, 660 AND 670.
ALL DISTURBED AREAS WITHIN THE PASCO COUNTY RIGHT-OF-WAY WILL BE SODDED OR SEEDED AND MULCHED (SEE TYPICAL CROSS-SECTIONS).

8. DETECTABLE WARNING SURFACES SHALL EXTEND THE FULL WIDTH OF THE RAMP AND IN THE DIRECTION OF TRAVEL 24" FROM THE BACK OF CURB (OR EDGE OF PAVEMENT). DETECTABLE WARNING SURFACES SHALL BE CONSTRUCTED IN ACCORDANCE WITH SPECIFICATION 527.

9. FOR DETECTABLE WARNING CRITERIA, REFER TO FDOT INDEX #304, SHEET 1, NOTES #5 & #9, AND SHEET 6 OF 6.

PASCO COUNTY SITE PLAN NOTES:

1. ALL UTILITY CONSTRUCTION SHALL COMPLY WITH PASCO COUNTY STANDARDS FOR DESIGN AND CONSTRUCTION OF WATER AND WASTEWATER FACILITES SPECIFICATIONS, LATEST EDITION.
2. INSTALLATION OF FUEL STORAGE TANKS REQUIRES REVIEW AND APPROVAL BY THE FIRE MARSHAL AND THE ISSUANCE OF A SEPARATE BUILDING PERMIT. APPROVAL OF THE SITE PLAN DOES NOT CONSTITUTE APPROVAL OF THE LOCATION OF THE FUEL TANKS.
3. ALL PROPOSED SIGNS MUST BE APPLIED FOR, APPROVED, AND PERMITTED ON AN INDIVIDUAL BASIS APART FROM ANY ULTIMATELY APPROVED SITE PLAN. APPROVAL OF THIS SITE PLAN DOES NOT CONSTITUE APPROVAL OF ANY SIGNAGE.
4. HANDICAP PARKING SPACES WILL BE PROPERLY SIGNED AND STRIPED IN ACCORDANCE WITH FLORIDA STATUTE 316, THE MANUAL ON UNIFORM TRAFFIC CONTROL DEVICES, OR OTHER APPLICABLE STANDARDS.
5. THE ARCHITECT/ENGINEER CERTIFIES THAT THE SITE HAS BEEN DESIGNED IN ACCORDANCE WITH THE AMERICANS WITH DISABILITIES ACT.
6. ALL ON-SITE PARKING SPACES WILL BE STRIPED AND SIGNED IN ACCORDANCE WITH THE MANUAL ON UNIFORM TRAFFIC CONTOL DEVICES, LATEST EDITION. PARKING SPACES, DIRCTIONAL ARROWS, AND STOP BARS SHALL BE STRIPED IN WHITE. IT SHALL BE THE OWNER/DEVELOPERS RESPONSIBILITY TO PROPERLY SIGN AND STRIPE THE SITE IN ACCORDANCE WITH APPLICABLE STANDARDS.
7. ALL RIGHT OF WAY WORK SHALL BE A FUNCTION OF AN APPROVED PASCO COUNTY RIGHT OF WAY USE PERMIT.
8. ALL CLEAR SITE AREAS SHALL BE KEPT FREE OF ANY SIGNAGE, PLANTINGS, TREES, ETC. IN EXCESS OF THREE AND A HALF FEET IN HEIGHT.
10. NO IRRIGATION SYSTEM OR LANDSCAPING SHALL BE INSTALLED IN ANY COUNTY OR STATE RIGHT-OF-WAY WITHOUT ISSUANCE OF APPROPRIATE RIGHT-OF-WAY USE PERMIT.
11. THE OWNER DEVELOPER ACKNOWLEDGES THAT THIS SITE AND ITS SUBSEQUENT BUILDING PERMITS SHALL COMPLY WITH ALL REZONING CONDITIONS.
12. ALL STRUCTURES, INCLUDING BUFFER WALLS, RETAINING WALLS, SIGNAGE, ETC. REQUIRE SEPARATE BUILDING PERMITS.
13. IF DURING CONSTRUCTION ACTIVITIES ANY EVIDENCE OF HISTORIC RESOURCES, INCLUDING BUT NOT LIMITED TO ABORIGINAL OR HISTORIC POTTERY, PREHISTORIC STONE TOOLS, BONE OR SHELL TOOLS, HISTORIC TRASH PITS, OR HISTORIC BUILDING FOUNDATION, ARE DISCOVERED, WORK SHALL COME TO AN IMMEDIATE STOP AND THE FLORIDA DEPARTMENT OF HISTORIC RESOURCES (STATE HISTORIC PRESERVATION OFFICER) AND PASCO COUNTY SHALL BE NOTIFIED WITHIN TWO WORKING DAYS OF THE RESOURCES BEING FOUND ON SITE.
14. SIDEWALKS SHALL BE PROVIDED AT THE TIME THE INDIVIDUAL LOTS ARE PROVIDED.
15. PRIOR TO THE START OF THE CLEARING AND GRUBBING, OR ANY SOIL DISTURBANCE CONTACT PC STORMWATER MGMT AT 727-834-3611 FOR A SOIL EROSION AND SEDIMENT CONTROL, PRE-INSPECTION MEETING.
16. SIDEWALK CLEAR ZONE SHALL BE FREE OF OBSTACLES, THIS INCLUDES SHRUBS, TREES, FENCES, ABOVE GROUND UTILITIES I.E. POWER POLES, STREET LIGHTS, GUY ANCHORS, FIRE HYDRANTS, MAIL BOXES, STREET SIGNS AND UTILITY MARKERS ETC.
17. UPON COMPLETION OF THE LAND DEVELOPMENT CONSTRUCTION, A PROFESSIONAL ENGINEER SHALL PROVIDE A CERTIFICATION TO PASCO COUNTY THAT THE PROJECT, INCLUDING EACH PAD AREA, COMPLIES WITH THE RECOMMENDATIONS OF THE GEOTECHNICAL/GEOLOGICAL ENGINEERING REPORT.
18. ALL RESIDENTIAL DRIVEWAY CUTS WILL BE TO LOCAL STREETS.
19. DETECTABLE WARNING STRIPS SHALL BE ALIGNED WITH THE DIRECTION OF TRAVEL.
20. SIDEWALK SHALL BE CONSTRUCTED OF NATURAL OR COLORED CONCRETE AT LEAST 3000 PSI IN STRENGTH, FIBER REINFORCED, ON A COMPACTED NON YIELDING SUBGRADE, A MINIMUM OF 5 FEET IN WIDTH ALONG TYPE 1, COLLECTOR OR ARTERIAL STREETS AND FOUR FEET IN WIDTH ALONG ALL OTHER STREETS AND MINIMUM 4" IN THICKNESS AND 6" IN THICKNESS WHERE SIDEWALK IS CROSSED BY A DRIVEWAY.

Geotechnical Notes:
Should any noticeable soil slumping or sinkhole formation become evident, the applicant/developer shall immediately notify the County, Tampa Bay Water (TBW), and SWFWMD, and adopt one or more of the following procedures as determined to be appropriate by the County and SWFWMD:

1. If the slumping or sinkhole formation becomes evident before or during construction activities, stop all work (except for mitigation activities) in the affected area and remain stopped until the County and SWFWMD approve resuming construction activities.
2. Take immediate measures to ensure no surface water drains into the affected areas.
3. Visually inspect the affected area.
4. Excavate and backfill or grout as required to fill the affected area and prevent further subsidence.
5. Use soil reinforcement materials in the backfilling operation, when appropriate.
6. If the affected area is in the vicinity of a water-retention area, maintain a minimum distance of two feet from the bottom of the retention pond to the surface of the lime-rock or karst connection.
7. If the affected area is in the vicinity of a water-retention area and the above methods do not Stabilize the collapse, relocate the retention area.
8. Discharge of storm-water into depressions with direct or demonstrated hydrologic connection to the Floridan Aquifer shall be prohibited
9. See Geological Report Dated May 16, 2012 by Driggers Engineers Additional Project Requirements.

OPERATION AND MAINTENANCE SCHEDULE
1. ANNUAL INSPECTION OF THE FOLLOWING ITEMS ARE RECOMMENDED:
   i. INLETS AND CONTROL STRUCTURES
   ii. POND EMBANKMENTS
   iii. BERMS
2. IF ACCUMULATION OF SEDIMENTS OR TRASH IS IMPEDING THE FLOW THROUGH PIPES, BAFFLES, WEIRS OR BLEED DOWN DEVICES, THEY WILL BE CLEANED.
3. IF POND EMBANKMENTS HAVE ERODED OR RUTTED WITH CREVICES GREATER THAN 3" IN DEPTH, THEY SHALL BE FILLED, COMPACTED AND RESODDED.

PASCO COUNTY
TRAFFIC CONTROL DEVICES NOTES FOR PRIVATE STREETS
Revised July 27, 2006
a. All traffic control devices shall be installed in conformance with the Manual on Uniform Traffic Control Devices and the Florida Department of Transportation standards.
b. All street name signs on private roads shall be D3 street name signs with the colors Reversed, white background with green letters and border. At intersections with County, State or City maintained roads; the county or state maintained road shall be green background with white letters and border. The City maintained road shall be green background with white letters and border unless the city has adopted other colors.
c. Any traffic control device for a private roadway placed in a county or state Right-of-Way shall be installed on the appropriate breakaway post assembly.

PASCO COUNTY FLORIDA
TRAFFIC OPERATIONS DIVISION
ENGINEERING SERVICES DEPARTMENT
DEVELOPMENT SERVICES BRANCH

SPECIFICATIONS FOR DESIGN AND INSTALLATION
OF TRAFFIC CONTROL DEVICES ON COUNTY ROADS
1) Purpose:
These specifications have been developed to provide developers with a uniform system for installation of traffic control devices on the County road system. A uniform system provides for reduced maintenance costs and a high standard of visibility for drivers. All required traffic control devices shall be installed by the developer of the project.
2) Florida State Statue 316.0745:
2.1) Any and all traffic control devices installed on the County road system shall conform to Florida State Statute 316.0745, Uniform signals and devices.
2.2) This statute requires that all devices conform to Florida Department of Transportation (FDOT) Specifications. The FDOT has adopted the Federal Manual on Uniform Traffic Control Devices as the standards to be used in the State of Florida.
4) Traffic Control Signs:
4.1) All sign blanks shall be of a type currently certified by the FDOT for use in the State of Florida.
4.2) All sign faces shall be High Intensity grade and of a type currently certified by the FDOT for use in the State of Florida.
4.3) All signs shall be no less than the standard size as specified by the Federal Manual on Uniform Traffic Control Devices. No minimum size signing shall be accepted. Larger signs shall be used when required by design speed etc.
4.4) All street name signs on private roads shall be D3 street name signs with the colors Reversed, white background with green letters and border. At intersections with County, State or City maintained roads; the county or state maintained road shall be green background with white letters and border. The City maintained road shall be green background with white letters and border unless the city has adopted other colors. Street name signs shall be 6" on local roads and 9" on collector and arterial roads. Six inch signs shall have 4" series C letters and 9" signs shall have 6" series B letters. Street name sign brackets for 6" signs 30" long or less, or 9" signs 24" long or less, shall have a 5 inch blade or cross. All other street name signs shall be mounted with brackets with a 12 inch blade or 8 inch cross. All street name sign brackets shall be supplied with bolts, set screws will not be accepted.
4.5) On roads to be maintained by Pasco County, all signs other than street names shall be date coded with a yellow reflective label affixed to the back of the sign. It will be punched to show month, day, and year of installation (See Sample Label). Alternate label designs providing the date code information may be used if a sample is submitted and approved by Pasco County prior to installation.
4.6) All post systems, mounting brackets and hardware shall be of a type currently in use by the Pasco County Public Works Department and currently certified by the Florida Department of Transportation for use in the State of Florida. Alternative systems etc. shall only be used if approved by the County Engineer.
5) Certification of materials:
5.1) All traffic control devices and materials shall be on the current F.D.O.T. APPROVED PRODUCTS LIST. Proof of certification is required for all traffic control devices.
5.2) A Traffic Control Devices Submittal Data Form shall be submitted for approval prior to installation of any traffic control devices. No traffic control device shall be installed until the certification submittal has been approved by the Traffic Operations Division. These forms are available from the Traffic Operations Division. Copies of the approved Traffic Control Devices Submittal Data Form shall be sent to the contractor and the Engineering Inspections Division.
6) Traffic Control Devices Plan:
6.1) A detailed set of plans for required traffic control devices shall be submitted for all road construction site development, subdivision, and Right-of-Way Use Permits. These plans shall be in conformance with FDOT design standards. All plans shall be signed and sealed by a registered professional engineer in the State of Florida.
6.2 With the submittal of final plans to the Development Review Division, two additional sets of the traffic control plan portion of the entire plan shall be submitted. These two sets will be forwarded to the Traffic Operations Division.
7) Cost Estimate
An engineer's cost estimate shall be required for all proposed traffic control devices. The estimate shall be provided in conjunction with the Traffic control Devices Submittal Data Form. see Section 5.2).
8) Inspection and acceptance:
8.1) Upon completion of the installation of the traffic control devices, the contractor shall call the Engineering Inspections Division for an inspection at (727) 847-8154.
8.2) The inspection shall be made by the Engineering Inspections Division with 48 hours (two working days) of the request.
8.3) An inspection report shall be made by the Engineering Inspections Division. Copies of the report shall be sent to the Engineer and the Developer.
8.4) No roadway shall be open to the Public until all traffic control devices have been inspected and accepted by Pasco County.
Revision 2, 11/06/01 Warning label
Revision 1, 3/13/98, Street sign brackets

PASCO COUNTY FIRE NOTES:
1. ALL PROJECTS MUST COMPLY WITH PASCO COUNTY FIRE HYDRANT ORDINANCE 46-51.
2. FIRE HYDRANTS SHALL BE INSTALLED AND IN SERVICE PRIOR TO THE ACCUMULATION OF COMBUSTIBLES.
3. PER THE NATIONAL FIRE PROTECTION ASSOCIATION, NFPA-1, 16.4.3.1.3: WHERE UNDERGROUND WATER MAINS AND HYDRANTS ARE TO BE PROVIDED, THEY SHALL BE INSTALLED, COMPLETED, AND IN SERVICE PRIOR TO CONSTRUCTION WORK.
4. PER NFPA-1, 18.3.4.1: CLEARANCES OF SEVEN AND ONE-HALF FEET IN FRONT OF AND TO THE SIDES OF THE FIRE HYDRANT WITH A FOUR-FOOT CLEARANCE TO THE REAR MUST BE MAINTAINED AT ALL TIMES.
5. GATED ENTRIES REQUIRE A SIREN OPERATING SYSTEM OR A 3M OPTICOM SYSTEM FOR EMERGENCY ACCESS.

UTILITY CONTACTS

CLEARWATER GAS SYSTEMS
400 N MYRTLE AVE
CLEARWATER, FL 33755

VERIZON FLORIDA INC
PO BOX 110
TAMPA, FL 33601

LEVEL 3 COMMUNICATIONS LLC
1025 ELDORADO BLVD, BLDG 13C04
BROOMFIELD, CO 80021

PASCO COUNTY UTILITIES
7530 LITTLE RD, ROOM 205
NEW PORT RICHEY, FL 34654
727-847-8145 Ext: 8621

TAMPA BAY WATER
2535 LANDMARK DR--SUITE 211
CLEARWATER, FL 33761-3930

PROGRESS ENERGY
JASON MEDLER
1-800-700-8744

BRIGHT HOUSE NETWORKS, LLC
30432 SR 54
WESLEY CHAPEL, FLORIDA 33543
KATHY MCDONALD (727)856-5129 EXT. 84402

PASCO COUNTY UTILITIES CONSTRUCTION AND CONTRACT MANAGEMENT DEPT.
PUBLIC WORKS/UTILITY BLDG.
7530 LITTLE ROAD, SUITE 205
NEW PORT RICHY, FL 34653
(727) 847-8040

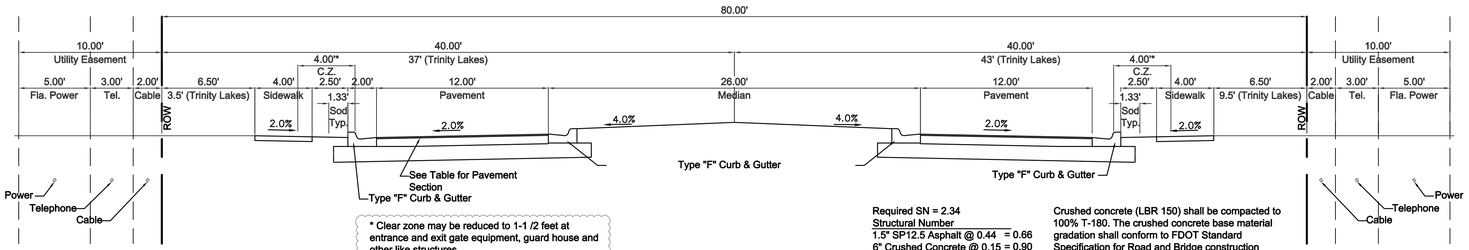

Hidden Springs Dr. (Type 3)
Trinity Lakes Dr. (Type 2)
Roadway Section

Required SN = 2.34
Structural Number
1.5" SP12.5 Asphalt @ 0.44 = 0.66
6" Crushed Concrete @ 0.15 = 0.90
12" Sub Base @ 0.08 = 0.96
Total Provided = 2.52

Crushed concrete (LBR 150) shall be compacted to 100% T-180. The crushed concrete base material gradation shall conform to FDOT Standard Specification for Road and Bridge construction sections 204 and 901. The crushed concrete shall also conform to the crushed concrete specifications contained in the Hillsborough County Transportation Technical Manual

OWNER :
DANIEL E. ALDRIDGE, VP
ADAM SMITH ENTERPRISES INC
PO BOX 1608
TARPON SPRINGS, FL 34688

ENGINEER :
DAVID W. DESILET, PE
LINCKS & ASSOCIATES, INC.
5023 W. LAUREL ST.
TAMPA, FLORIDA 33607
PH : (813) 289-0039

SURVEYOR :
DLB SURVEYING, INC.
36420 Terrier Court
Zephyrhills, Florida 33541
Phone: 813-783-1111 Fax: 813-782-7055
Email: dlbsinc@yahoo.com
Owner/President: David L. Berry

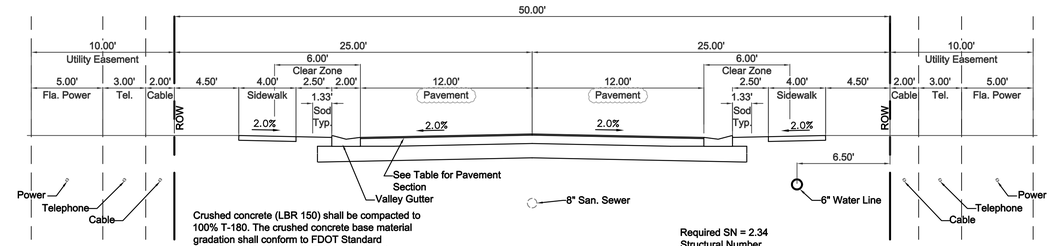

Crushed concrete (LBR 150) shall be compacted to 100% T-180. The crushed concrete base material gradation shall conform to FDOT Standard Specification for Road and Bridge construction sections 204 and 901. The crushed concrete shall also conform to the crushed concrete specifications contained in the Hillsborough County Transportation Technical Manual

Road Section
Type 3 & 4 Roadway

Required SN = 2.34
Structural Number
1.5" SP12.5 Asphalt @ 0.44 = 0.66
6" Crushed Concrete @ 0.15 = 0.90
12" Sub Base @ 0.08 = 0.96
Total Provided = 2.52

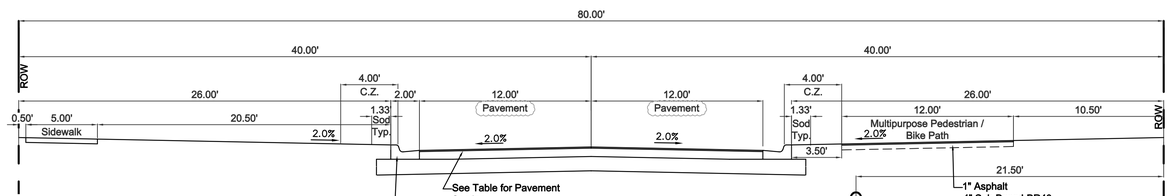

Cool Springs Parkway (Type 1B Roadway)
** Community Drive Improvements

See Sheet C24 For Trinity Blvd. Pavement Section

**
Required SN = 3.5
Structural Number
0.75" SP9.5 Asphalt @ 0.44 = 0.33
2.25" SP12.5 Asphalt @ 0.44 = 0.99
8.5" Crushed Concrete @ 0.15 = 1.28
12" Sub Base LBR40 @ 0.08 = 0.96
Total Provided = 3.56

Crushed concrete (LBR 150) shall be compacted to 100% T-180. The crushed concrete base material gradation shall conform to FDOT Standard Specification for Road and Bridge construction sections 204 and 901. The crushed concrete shall also conform to the crushed concrete specifications contained in the Hillsborough County Transportation Technical Manual

Pavement Section Notes:
1. For all roadway types, below the stabilized subgrade a minimum of two feet of select material, consisting of A-3 (SP) soil and/or A-2-4 with a maximum 15 percent passing number 200 sieve, shall be provided.

2. The engineer responsible for the project shall certify to the county engineering services director (thru PC Engineering Inspections) that the select material meets these standards prior to installation of the base. Certification shall strictly comply with the attached certification form available in "Engineering Services Department: A Procedural Guide for the Preparation of Assurances of Completion and Maintenance

LEGEND:

W	PROPOSED INCREMENT DESIGNATION
	PROPOSED INCREMENT LINE
MC	PROPOSED MODEL CENTER
	PROPOSED FIRE HYDRANT
	PROPOSED WATER MAINS
SS	PROPOSED SANITARY SEWER
	PROPOSED SANITARY SEWER MANHOLE
	PROPOSED WATER MAIN VALVE
	PROPOSED STORM SEWER
	PROPOSED FLOW ARROW
	OFFSITE FLOW ARROW
	CONSERVATION AREA (LIMITS OF WETLANDS)
	FLOOD ZONE BOUNDARY
F-69	FLUME 69, SEE DETAILS C-6
TYPE "A" 37.10	PROPOSED PAD ELEVATION (FIN. FLOOR TO BE 6" ABOVE PAD ELEVATION)
PREVIOUS 34.62	PROPOSED ELEVATION
	PROPOSED SILT FENCE

ASPHALT PAVING NOTES
CONSTRUCTION OF ASPHALT PAVING SHALL BE PERFORMED AS FOLLOWS:

1. THE AREAS TO BE PAVED SHALL BE GRADED TO PROVIDE NECESSARY DRAINAGE.
2. THE SURFACE SHALL BE CLEAN AND DRY. PRIME COAT SHALL BE APPROVED CUTBACK ASPHALT (RC-70 OR RC-90) AND PROPER TEMPERATURE WHEN APPLIED BY MEANS OF A PRESSURE DISTRIBUTOR AT THE RATE OF APPROXIMATELY 0.1 TO 0.25 GALLONS PER SQUARE YARD.
3. AN ASPHALT CONCRETE ANALYSIS TO GUARANTEE COMPLIANCE WITH FDOT SPECIFICATIONS SHALL BE CONDUCTED BY AN INDEPENDANT LABORATORY AND THE FINAL REPORT SUBMITTED TO ENGINEER AND OWNER PRIOR TO FINAL ACCEPTANCE.
4. ALL ASPHALT AND RELATED ASPHALT WORK SHALL CONFORM TO PASCO COUNTY AND FDOT CURRENT STANDARDS.

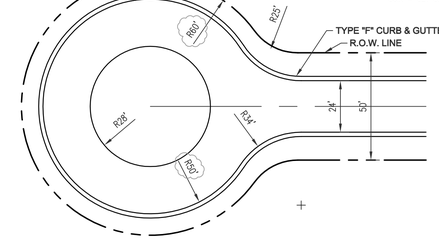
R/25'
R/50'
TYPE "F" CURB & GUTTER

WASTEWATER SYSTEMS GENERAL REQUIREMENTS

1) Contractor shall take measures to prevent introduction into the sanitary sewer system of storm water, surface water, groundwater, roof runoff, subsurface drainage, swimming pool drainage, air conditioning system condensate water, non–contact cooling water except as provided by FDEP Rule 62–610.668(1), F.A.C..

2) All new or relocated, buried sewers and force mains, shall be located in accordance with the separation requirements from water mains and reclaimed water lines of FDEP Rules 62–604.400(2)(g)(h) and (i) and (3), FAC. Note, if the criteria of Rules 62–604.400(2)(g) 4. or (2)(i) 3., FAC., are used alternative construction features will need be provided to afford a similar level of reliability and public health protection. [62– 604.400(2)(g), (h), and (i) and (3), FAC.]

GRAVITY SEWERS

3) No gravity sanitary sewer (except laterals) shall be less than 8 inches in diameter.

4) Contractor shall take precautions as necessary to prevent buoyancy of sewers, and appropriate construction techniques are to be used to prevent flotation of the pipe where high groundwater conditions are anticipated.

5) Sewers shall be constructed with uniform slope between manholes.

6) Where pipe velocities are greater than 15 fps, Contractor shall use measures to protect the gravity sewer against displacement by erosion and impact.

7) Sewers on 20% slopes or greater shall be anchored securely with concrete, or equal, anchors spaced as follows: not over 36 feet center to center on grades 20% and up to 35%; not over 24 feet center to center on grades 35% and up to 50%; and not over 16 feet center to center on grades 50% and over.

8) Sewers 24 inches or less shall be constructed with straight alignment between manholes.

9) Suitable couplings complying with ASTM specifications are required for joining dissimilar materials.

10) Sewers are designed to prevent damage from superimposed loads and Contractor shall not subject sewers to superimposed loads exceeding the design limits.

11) Contractor shall perform deflection tests on all flexible pipe. Testing is required after the final backfill has been in place at least 30 days to permit stabilization of the soil–pipe system. Testing requirements: 1) no pipe shall exceed a deflection of 5%; 2) using a rigid ball or mandrel for the deflection test with a diameter not less than 95% of the base inside diameter or average inside diameter of the pipe, depending on which is specified in the ASTM specification, including the appendix, to which the pipe is manufactured; and 3) performing the test without mechanical pulling devices.

12) Contractor shall perform leakage tests on all gravity pipes: 1) the leakage exfiltration or infiltration shall not exceed 200 gallons per inch of pipe diameter per mile per day for any section of the system; 2) exfiltration or infiltration tests shall be performed with a minimum positive head of 2 feet; and 3) air tests, as a minimum, shall conform to the test procedure described in ASTM C–828 for clay pipe, ASTM C 924 for concrete pipe, ASTM F –1417 for plastic pipe, and for other materials appropriate test procedures.

MANHOLES

13) Drop pipes shall be provided for sewers entering manholes at elevations of 24 inches or more above the manhole invert. Where the difference in elevation between the incoming sewer and the manhole invert is less than 24 inches, the invert shall be constructed with a fillet to prevent solids deposition. Inside drop connections (when necessary) shall be secured to the interior wall of the manhole and provide access for cleaning. Outside drop connection shall be encased in concrete.

14) Manholes shall have a minimum inside diameter of 48 inches and a minimum access diameter of 22 inches.

15) A bench shall be provided on each side of any manhole channel when the pipe diameter(s) are less than the manhole diameter. No lateral sewer, service connection, or drop manhole pipe shall discharge onto the surface of the bench.

16) Contractor shall construct: 1) manhole lift holes and grade adjustment rings shall be sealed with non–shrinking mortar or other appropriate material; 2) inlet and outlet pipes shall be joined to the manhole with a gasketed flexible watertight connection or another watertight connection arrangement that allows differential settlement of the pipe and manhole wall; and 3) watertight manhole covers shall be used wherever the manhole tops may be flooded by street runoff or high water.

17) Contractor shall perform manhole inspection and testing for water tightness or damage prior to placing into service. Air testing, if specified for concrete sewer manholes, shall conform to the test procedures described in ASTM C–1244.

18) Electrical equipment specified for use in manholes shall comply with the National Electrical Code requirements for Class I Group D, Division 1 locations; be suitable for use under corrosive conditions; flexible cables shall be provided with a watertight seal and separate strain relief; a fused disconnect switch located above ground shall be provided for the main power feed; electrical equipment exposed to weather shall meet the requirements of weatherproof equipment NEMA 3R or 4; a 110 volt power receptacle to facilitate maintenance shall be provided ; and ground fault interruption protection be provided for all outdoor outlets.

PUMP STATIONS

19) Pump station structures and electrical and mechanical equipment shall be constructed to be protected from physical damage by the 100–year flood.

20) Pump stations shall be constructed to be readily accessible by maintenance vehicles during all weather conditions.

21) Contractor shall install equipment and devices that facilitates removing pumps, motors, and other mechanical and electrical equipment.

22) Contractor shall only use construction materials that are appropriate under conditions of exposure to hydrogen sulfide and other corrosive gases, greases, oils, and other constituents frequently present in wastewater.

23) Except for grinder pumps, pumps handling raw wastewater shall pass spheres of at least 3 inches in diameter. Pump suction and discharge openings shall be at least 4 inches in diameter.

24) Contractor shall provide and construct: 1) pump stations be protected from lightning and transient voltage surges; and 2) pump stations be equipped with lighting arrestors, surge capacitors, or other similar protection devices and phase protection.

25) Contractor shall adhere to, provide and construct: 1) electrical systems and components (e.g., motors, lights, cables, conduits, switch boxes, control circuits, etc.) in raw wastewater wet wells, or in enclosed or partially enclosed spaces where hazardous concentrations of flammable gases or vapors may be present, comply with the National Electrical Code requirements for Class I Group D, Division 1 locations; 2) electrical equipment located in wet wells be suitable for use under corrosive conditions; 3) each flexible cable be provided with a watertight seal and separate strain relief; 4) a fused disconnect switch located above ground be provided for the main power feed for all pump stations; 5) electrical equipment exposed to weather to meet the requirements of weatherproof equipment NEMA 3R or 4; 6) a 110 volt power receptacle to facilitate maintenance be provided inside the control panel for pump stations that have control panels outdoors; and 7) ground fault interruption protection be provided for all outdoor outlets.

26) Contractor shall install suitable shutoff and check valves on the discharge line of each pump (except on screw pumps); 3) a check valve be located between the shutoff valve and the pump; 4) check valves be suitable for the material being handled; 5) check valves be placed on the horizontal portion of discharge piping (except for ball checks, which may be placed in the vertical run); 6) all valves be capable of withstanding normal pressure and water hammer; and 7) all shutoff and check valves be operable from the floor level and accessible for maintenance.

27) Wet well floors shall have a minimum slope of 1 to 1 to the hopper bottom and the horizontal area of hopper bottoms be no greater than necessary for proper installation and function of the pump inlet.

28) For covered wet wells, Contractor shall provide for air displacement to the atmosphere, such as an inverted "J" tube or other means.

29) Contractor shall construct pump stations in a manner which minimizes adverse effects from odors, noise, and lighting.

30) Pump stations shall be constructed with lockable hatches and panels compatible with the authority responsible for operation and maintenance of the collection/transmission system. Contractor shall provide and install an unobstructed sign made of durable weather resistant material at a location visible to the public with a telephone number for a point of contact in case of emergency.

31) Reduced–pressure principle backflow–prevention assemblies shall be provided on all potable water supplies at the pump station.

ADDITIONAL ITEMS TO BE COMPLETED FOR SUBMERSIBLE PUMP STATIONS

32) Submersible pumps and motors shall be designed specifically for raw wastewater use, including totally submerged operation during a portion of each pump cycle and to meet the requirements of the National Electrical Code for such units. Provisions for detecting shaft seal failure or potential seal failure shall be included.

33) Submersible pumps shall be readily removable and replaceable without dewatering the wet well or disconnecting any piping in the wet well.

34) Electrical supply, control, and alarm circuits shall have strain relief; shall allow disconnection from outside the wet well; and shall protect terminals and connectors from corrosion by location outside the wet well or through use of watertight seals.

35) The motor control center shall be located outside the wet well, readily accessible, and protected by a conduit seal or other appropriate measures meeting the requirements of the National Electrical Code, to prevent the atmosphere of the wet well from gaining access to the control center. If a seal is installed, the motor shall be removable and electrically disconnected without disturbing the seal. Control equipment exposed to weather shall meet the requirements of weatherproof equipment NEMA 3R or 4.

36) Contractor to provide and install: 1) pump motor power cords shall be flexible and serviceable under conditions of extra hard usage and to meet the requirements of the National Electrical Code standards for flexible cords in wastewater pump stations; 2) ground fault interruption protection shall be used to de–energize the circuit in the event of any failure in the electrical integrity of the cable; and 3) power cord terminal fittings shall be corrosion–resistant and constructed in a manner to prevent the entry of moisture into the cable, provided with strain relief appurtenances, and designed to facilitate field connecting.

37) All shut –off and check valves shall be located in a separate valve pit. Contractor shall provide for drainage of accumulated water from the valve pit.

WATER SYSTEMS GENERAL REQUIREMENTS

1. Existing water mains and service lines shall be kept in operation during construction or with minimized interruption.

2. All pipe, pipe fittings, pipe joint packing and jointing materials, valves, fire hydrants, and meters will conform to applicable American Water Works Association (AWWA) standards.

3. All public water system components, excluding fire hydrants, that will come into contact with drinking water will conform to NSF International Standard 61.

4. All pipe and pipe fittings will contain no more than 8.0% lead, and any solder or flux will contain no more than 0.2% lead.

5. All pipe and pipe fittings will be color coded or marked in accordance with FDEP subparagraph 62–555.320(21)(b)3, F.A.C., using blue as a predominant color. (Underground plastic pipe will be solid–wall blue pipe, will have a co–extruded blue external skin, or will be white or black pipe with blue stripes incorporated into, or applied to, the pipe wall; and underground metal or concrete pipe will have blue stripes applied to the pipe wall. Pipe striped during manufacturing of the pipe will have continuous stripes that run parallel to the axis of the pipe, that are located at no greater than 90–degree intervals around the pipe, and that will remain intact during and after installation of the pipe. If tape or paint is used to stripe pipe during installation of the pipe, the tape or paint will be applied in a continuous line that runs parallel to the axis of the pipe and that is located along the top of the pipe; for pipe with an internal diameter of 24 inches or greater, tape or paint will be applied in continuous lines along each side of the pipe as well as along the top of the pipe. Aboveground pipe will be painted blue or will be color coded or marked like underground pipe.)

6. New or altered water mains providing fire protection and serving fire hydrants will be at least six inches.

7. New or altered water mains not carrying fire flows will not have fire hydrants connected to them.

8. New or altered dead–end water mains will be provided with a fire or flushing hydrant or blow–off for flushing purposes.

9. New or altered fire hydrant leads will have an inside diameter of at least six inches and will include an auxiliary valve.

10. All fire hydrants that will have unplugged, underground drains will be located at least three feet from any existing or proposed storm sewer, stormwater force main, pipeline conveying reclaimed water regulated under FDEP Part III of Chapter 62–610, F.A.C., or vacuum–type sanitary sewer; at least six feet from any existing or proposed gravity– or pressure–type sanitary sewer, wastewater force main, or pipeline conveying reclaimed water not regulated under FDEP Part III of Chapter 62–10, F.A.C.; and at least ten feet from any existing or proposed "on–site sewage treatment and disposal system."

11. At high points where air can accumulate in new or altered water mains, provisions will be made to remove the air by means of air relief valves, and automatic air relief valves will not be used in situations where flooding of the valve manhole or chamber may occur.

12. The open end of the air relief pipe from all automatic air relief valves will be extended to at least one foot above grade and will be provided with a screened, downward–facing elbow.

13. New or altered chambers, pits, or manholes that contain valves, blow–offs, meters, or other such water distribution system appurtenances will not be connected directly to any sanitary or storm sewer, and blow–offs or air relief valves will not be connected directly to any sanitary or storm sewer.

14. New or altered water mains will be installed in accordance with applicable AWWA standards or in accordance with manufacturers' recommended procedures.

15. A continuous and uniform bedding will be provided in trenches for underground pipe; backfill material will be tamped in layers around underground pipe to a sufficient height above the pipe to adequately support and protect the pipe; and unsuitably sized stones (as described in applicable AWWA standards or manufacturers' recommended installation procedures) found in trenches will be removed for a depth of at least six inches below the bottom of underground pipe.

16. All water main tees, bends, plugs, and hydrants will be provided with thrust blocks or restrained joints to prevent movement.

17. New or altered water mains that will be constructed of asbestos–cement or polyvinyl chloride pipe will be pressure and leakage tested in accordance with AWWA Standard C603 or C605, respectively, and all other new or altered water mains will be pressure and leakage tested in accordance with AWWA Standard C600 and any other applicable standard.

18. New or altered water mains, including fire hydrant leads and including service lines that will be under the control of a public water system and that have an inside diameter of three inches or greater, will be disinfected and bacteriologically evaluated in accordance with FDEP Rule 62–555.340, F.A.C.

19. New or altered water mains that will be installed in areas where there are known aggressive soil conditions will be protected through use of corrosion–resistant water main materials, through encasement of the water mains in polyethylene, or through provision of cathodic protection.

20. New or relocated, underground water mains will be laid to provide a horizontal distance of at least three feet between the outside of the water main and the outside of any existing or proposed vacuum–type sanitary sewer, storm sewer, stormwater force main, or pipeline conveying reclaimed water regulated under FDEP Part III of Chapter 62–610, F.A.C.; a horizontal distance of at least six feet between the outside of the water main and the outside of any existing or proposed gravity–type sanitary sewer (or a horizontal distance of at least three feet between the outside of the water main and the outside of any existing or proposed gravity–type sanitary sewer if the bottom of the water main will be laid at least six inches above the top of the sewer); a horizontal distance of at least six feet between the outside of the water main and the outside of any existing or proposed pressure–type sanitary sewer, wastewater force main, or pipeline conveying reclaimed water not regulated under FDEP Part III of Chapter 62–610, F.A.C.; and a horizontal distance of at least ten feet between the outside of the water main and all parts of any existing or proposed "on–site sewage treatment and disposal system."

21. New or relocated, underground water mains that will cross any existing or proposed gravity– or vacuum–type sanitary sewer or storm sewer will be laid so the outside of the water main is at least six inches above the other pipeline or at least 12 inches below the other pipeline; and new or relocated, underground water mains that are and that will cross any existing or proposed pressure–type sanitary sewer, wastewater or stormwater force main, or pipeline conveying reclaimed water will be laid so the outside of the water main is at least 12 inches above or below the other pipeline.

22. At the utility crossings described above, one full length of water main pipe will be centered above or below the other pipeline so the water main joints will be as far as possible from the other pipeline or the pipes will be arranged so that all water main joints are at least three feet from all joints in vacuum–type sanitary sewers, storm sewers, stormwater force mains, or pipelines conveying reclaimed water regulated under FDEP Part III of Chapter 62–610, F.A.C., and at least six feet from all joints in gravity– or pressure–type sanitary sewers, wastewater force mains, or pipelines conveying reclaimed water not regulated under FDEP Part III of Chapter 62–610, F.A.C.

23. Backflow protection will be provided at those new or altered service connections where backflow protection is required or recommended under FDEP Rule 62–555.360, F.A.C., or in Recommended Practice for Backflow Prevention and Cross–Connection Control, AWWA Manual M14; or the public water system that will own this project after it is placed into operation has a cross–connection control program requiring water customers to install proper backflow protection at those service connections where backflow protection is required or recommended.

24. Neither steam condensate, cooling water from engine jackets, nor water used in conjunction with heat exchangers will be returned to the new or altered water mains.

WASTEWATER SYSTEMS GENERAL REQUIREMENTS (CONTINUED)

EMERGENCY OPERATIONS FOR PUMP STATIONS

38) Pump stations shall include an alarm system which activates in cases of power failure, sump pump failure, pump failure, unauthorized entry, or any cause of pump station malfunction. According to the authority responsible for monitoring the pump station, pump station alarms shall be either telemetered and/or provided with an audio–visual alarm system with a self–contained power supply.

39) Emergency pumping connection shall be provided for all pump stations.

FORCE MAINS

40) The minimum force main diameter specified for raw wastewater shall be not less than 4 inches.

41) Intersecting force mains shall be provided with appropriate valves such that one branch may be shut down for maintenance and repair without interrupting the flow of other branches; and 2) stubouts on force mains, placed in anticipation of future connections, shall be equipped with a valve to allow such connection without interruption of service.

42) Air relief valves shall be placed at high points in the force main to prevent air locking.

43) Force main pipe and joints are equal to water main strength materials suitable for design conditions. The force main, reaction blocking, and station piping shall be constructed to withstand water hammer pressures and stresses associated with the cycling of wastewater pump stations.

44) Force mains shall be clearly identified as separate from water mains.

45) Contractor shall perform leakage tests of all force mains.

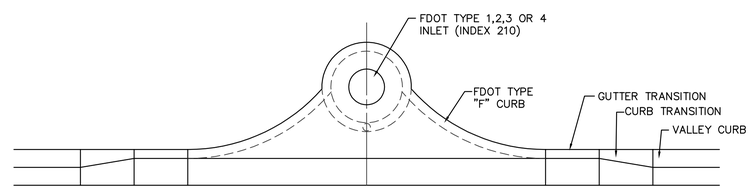

PLAN

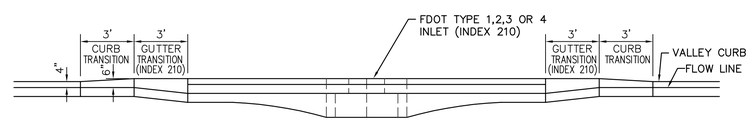

SECTION

TRANSITION DETAIL FOR
TYPE "F" TO VALLEY CURB

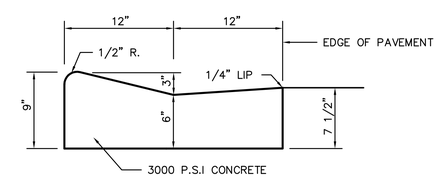

CONCRETE VALLEY CURB

LINCKS & ASSOCIATES, INC.
5023 West Laurel Street
Tampa, Florida 33607
Tel (813) 289-0039
Fax (813) 287-0674
Engineers
Planners

DATE	08/07/2012
DESIGNED	
DRAWN	DWM
CHECKED	DWD
JOB NO.	10087

The Villages of Trinity Lakes
General Notes And Details

REVISIONS

01/29/2013	Added Valley Curb Detail, Transition Detail for Type F to Valley Curb

David W. Desilet
24760

SHEET C2B OF

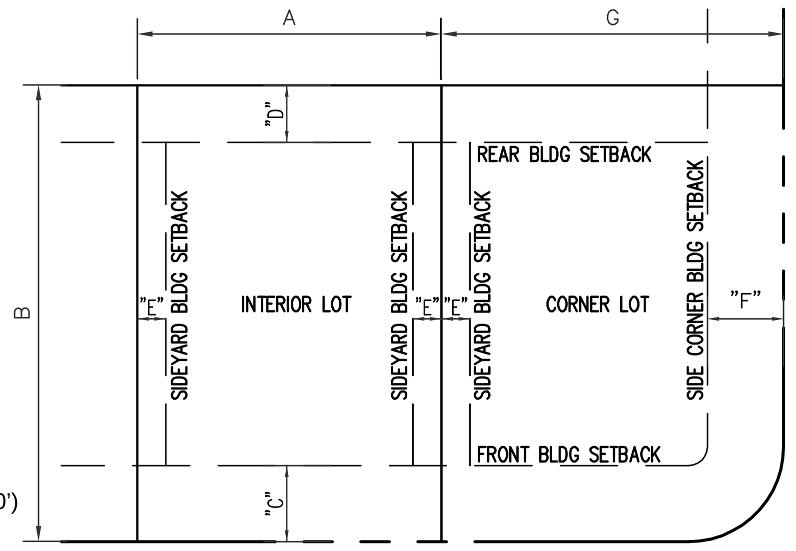

LOT DETAIL
NO SCALE

Parking Space Requirements:
Single-Family Detached/Attached and
Two-Family Dwellings:

- 1, 2 and 3 bedrooms: 2 spaces per unit
- 4 or more bedrooms: 3 spaces per unit
- Parking spaces must be full size (9' X 20')

Green Book 2007
Table 3-3

Low Speed Urban w/o Super	
MPH	Radius
15	50
20	95
25	180
30	300

Wetland / Fill Impacts

W/F	Area
Ep 17	1.42 Ac.
Ep 21	2.74 Ac.
Ep 22	6.81 Ac.
Ep 62	0.33 Ac.
Total	11.30 Ac.

Tract Designation	Use	Other Use Size / Width	Area Acres
1	Private Street ROW		6.873
2	Private Street ROW		4.059
A	Buffer, Landscape, Sign & Wall Easement		0.102
B	Buffer, Landscape, Sign & Wall Easement		0.087
C	Drainage Easement	15' & 20' Wide Buffer, Landscape, Sign & Wall Easement	5.393
D	Neighborhood Park (2.510 Ac. + Ease.)	20' Wide Buffer, Landscape, Sign & Wall Easement	2.652
E	Pump Station		0.059
F	Drainage Easement		0.372
G	Drainage & Utilities	15' & 20' Wide Buffer, Landscape, Sign & Wall Easement	6.475
H	Buffer, Landscape, Sign & Wall Easement		0.049
J	Buffer, Landscape, Sign & Wall Easement		0.048
K	Drainage Easement	20' Wide Buffer, Landscape, Sign & Wall Easement	1.619
L	Drainage Easement	20' Wide Buffer, Landscape, Sign & Wall Easement	9.807
M	Drainage Easement	15' & 20' Wide Buffer, Landscape, Sign & Wall Easement	1.883
N	Buffer, Landscape, Sign & Wall Easement		0.115
O	Buffer, Landscape, Sign & Wall Easement		0.138
P	Drainage Easement		0.976
Q	Emergency Access, Drainage Easement	20' Wide Emergency Access & Drainage Easement	0.028
R	Drainage Easement	20' Wide Buffer, Landscape, Sign & Wall Easement	4.828
S	Drainage Easement	15' Wide Buffer, Landscape, Sign & Wall Easement	6.222
T	Drainage Easement	20' Wide Buffer, Landscape, Sign & Wall Easement	1.470

Trinity Communities DRI - Single Family Entitlements

	Lots
Approved Phase 1	4,217
Approved Phase 1A	115
Approved Total	4,332
Developed / Platted (1)	3,758
Remainder	574
Proposed	251

(1) Includes Pinellas County and 400 Lots Assigned to Heritage Springs Option Parcel B

Model Center(s) will utilize up to 10% of Lots (25 Lots). (See Lots With "MC")

LOT DIMENSION TABLE

DESC	LOT TYPE	TYP. WIDTH A	TYP. DEPTH B	MIN. FRONT C	MIN. REAR D	MIN. SIDE E	MIN. BETWEEN BUILDINGS	TYP. BUILDING PAD	MIN. SIDE CORNER F	TYP. LOT WIDTH FOR STD. CORNER G	** MAX. COVERAGE	MAX. HEIGHT	MIN. LOT SIZE	MPUD
Willow Reed Village (W)	1	45'	110'	20'	10'	0'	10' *	35' x 75'	10'	55'	45%	35'	3,000 SF	SF 4UPA-8UPA
Wild Fern Village (S)	2	55'	110'	20'	15'	6.5'	12'	40' x 75'	10'	65'	45%	35'	4,800 SF	SF 4UPA-6UPA
Sago Village (E)	3	65'	110'	20'	15'	6.5'	15'	50' x 75'	15'	80'	45%	35'	6,500 SF	SF 2UPA-4UPA

* NOT REQUIRED BY CODE

** PLUS 20% FOR ACCESSORY STRUCTURES

LEGEND

(12) LAND USE PARCEL FROM MAP 'H'
LIMITS OF PLAT
LIMITS OF VILLAGE (APPROX)
[W] VILLAGE

TOTAL LOTS PER VILLAGE

Willow Reed Village (W)	95
Wild Fern Village (S)	89
Sago Village (E)	67
Total	251

SECS. 28,29,32,&33, TWP. 26S., RNG. 17E.

TRINITY COMMUNITIES - MASTER DEVELOPMENT PLAN MAP H DATED 06 / 23 / 09

9 =	COMMERCIAL
12 =	OFFICE / COMMERCE PARK
13 =	FLEX: COMMERCE PARK / COMMERCIAL / RESIDENTIAL
15 =	COMMERCIAL

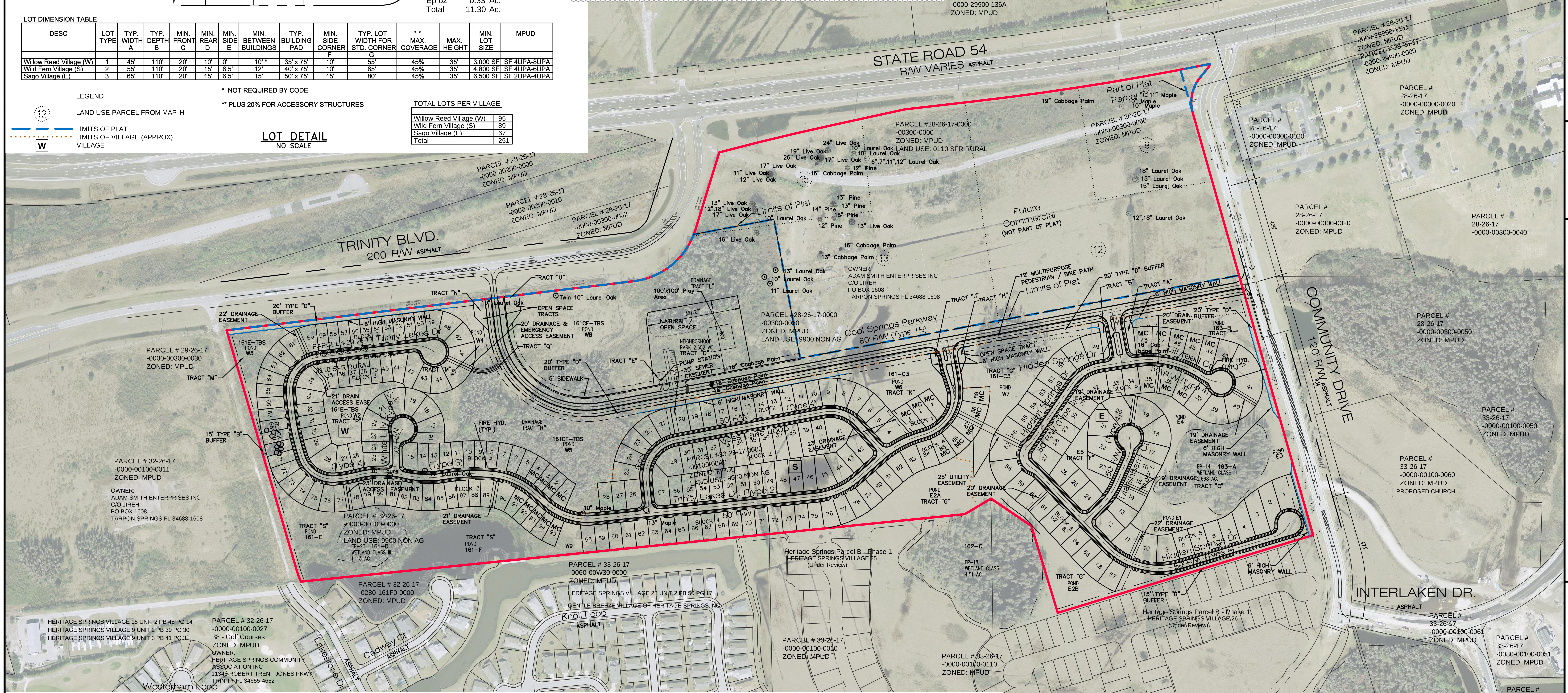

PRELIMINARY PLAN GENERAL NOTES

1. TRINITY COMMUNITIES IS A MPUD AND ITS CONDITIONS WERE APPROVED BY THE BOARD OF COUNTY COMMISSIONERS JANUARY 26, 1988.

2. ALL ROADS EXCEPT COOL SPRINGS PARKWAY WITHIN THE SUBDIVISION SITE ARE PRIVATE.

3. BACK TO BACK LOTS MAY BE PROVIDED WITH BUFFER WALLS IN A 5' EASEMENT, WITH 2-1/2' ON EACH LOT. DOUBLE FRONTAGE LOTS MAY BE PROVIDED WITH A WALL IN A 5' EASEMENT.

4. ALL ROAD RIGHT-OF-WAYS TO BE 50 FEET, EXCEPT AS NOTED OTHERWISE ON PLANS.

5. DRAINAGE WILL BE PER THE TRINITY COMMUNITY MASTER DRAINAGE PLAN LATEST REVISION APPROVED BY PASCO COUNTY .

6. THE LAND USE FOR TRINITY LAKES SHOWN ON THE PASCO COUNTY FUTURE LAND USE PLAN (2025) IS ROR. LAND IS CURRENTLY VACANT. THE MPUD PLAN MAP "H" DATED JUNE 23, 2009 SHOWS FLEX: COMMERCE PARK / COMMERCIAL / RESIDENTIAL, COMMERCIAL, & OFFICE/COMMERCE PARK PARCELS.

7. THE ENTIRE SITE IS WITHIN ZONE 'X' (NO ESTABLISHED FLOOD ELEVATION), PER THE FIRM COMMUNITY PANEL #120230 0360 D, DATED SEPT 30, 1992. ELEVATIONS ON THE FIRM PANEL ARE BASED UPON NGVD 1929 DATUM.

8. REVIEW OF THE PASCO COUNTY COMPREHENSIVE PLAN FOUND NO HISTORICAL RESOURCES LOCATED WITHIN THE PROJECT LIMITS.

9. THE PROJECT IMPACT ON CUMULATIVE DEMAND FOR SERVICES AND FACILITIES WAS ADDRESSED IN THE TRINITY COMMUNITY DRI APPROVED BY THE PASCO COUNTY BOARD OF COUNTY COMMISSIONERS IN DECEMBER OF 1989.

10. EXISTING CONTOURS ARE BASED UPON THE DIGITAL COAST, 2004 SWFWMD LIDAR MAPS FOR PASCO COUNTY. BASED UPON NGVD 1929 DATUM.

11. THE LIMITS OF THE WETLANDS SHOWN HEREON HAVE BEEN APPROVED BY SWFWMD.

12. FOR ROADWAY DESIGN, SEE TABLE 3-3 ABOVE FROM THE FDOT GREEN BOOK (2007).

13. ALL STORMWATER PIPES BETWEEN LOTS WILL BE IN MIN. 15' DRAINAGE EASEMENTS, AND WILL COMPLY WITH LDC 902.2.L.

14. ALL PUBLIC AND PRIVATE ROADWAYS SHALL COMPLY WITH THE PROVISIONS OF THE MANUAL OF MINIMUM UNIFORM STANDARDS, STATE OF FLORIDA, PURSUANT TO 336.045 F.S., IF APPLICABLE.

WHERE MEDIANS ARE PROPOSED, THE MINIMUM WIDTHS SHALL BE AS FOLLOWS:
1. TYPE 1 AND 2 STREETS
 a. TWENTY TWO (22) FEET WHERE MOUNTABLE CURBS ARE USED.
 b. FIFTEEN AND ONE-HALF (15 1/2) FEET WHERE BARRIER CURBS ARE USED.
2. TYPE 3 AND 4 STREETS
 THE MINIMUM MEDIAN WIDTH SHALL BE TWICE THE ROADSIDE CLEAR ZONE MINIMUM WIDTH PLUS THE WIDTH OF THE EXISTING OR PROPOSED OBSTRUCTION. THE PAVEMENT LANE WIDTH AROUND EACH SIDE OF THE MEDIAN SHALL BE THE TOTAL STREET WIDTH PRIOR TO ENCOUNTERING THE MEDIAN, DIVIDED BY TWO (2) PLUS TWO (2) FEET OF ADDITIONAL PAVEMENT.

15. WHERE DRAINAGE AREAS ABUT ROAD RIGHT-OF-WAYS, DRAINAGE AREAS SHALL BE PLANTED WITH ONE (1) TREE PER FIFTY (50) LINEAL FEET OF POND BANK. TREES SHALL BE PLANTED ON THE BANKS OF THE PONDS. ALL BANKS SHALL BE SODDED TO THE POND BOTTOM. REQUIRED BUFFERING SHALL MEET THE REQUIREMENTS OF SECTION 603 OF THE PASCO COUNTY LAND DEVELOPMENT CODE.

16. TEMPORARY "T" TYPE TURNAROUNDS WILL BE PROVIDED WHERE INCREMENTAL CONSTRUCTION WILL CREATE A DEAD END, UNLESS OTHERWISE APPROVED IN THE CONSTRUCTION PLANS.

17. THERE ARE NO KNOWN WELLHEAD PROTECTION AREAS (WPA) WITHIN 1,000 FEET OF THE PROJECT.

18. ENTIRE PARCEL CONTAINS 138.745 ACRES, MORE OR LESS.

19. POTABLE WATER BY PASCO COUNTY. SEWAGE DISPOSAL BY PASCO COUNTY. ELECTRIC SERVICE BY PROGRESS ENERGY.

20. THE PARK WILL BE MAINTAINED BY THE TRINITY LAKES HOMEOWNERS ASSOCIATION.

Site Data

Project Area:	6,043,730	SF /	138.745	Ac.
Plat Area:	4,353,386	SF /	99.940	Ac.
Commercial	1,697,884	SF /	38.978	Ac.
Residential	1,745,853	SF /	40.079	Ac.
Park	115,519	SF /	2.652	Ac.
Pump Station	2,589	SF /	0.059	Ac.
Pond Tracts	1,641,829	SF /	37.691	Ac.
Wetlands (Class III)	164,699	SF /	3.781	Ac.
Cool Springs Pkwy	271,460	SF /	6.232	Ac.
Other Road ROW's	473,551	SF /	10.871	Ac.
Open Space / Buffers	95,108	SF /	2.183	Ac.
Developable Acreage	5,879,031	SF /	134.964	Ac.

Note: Wetland Area is included within Pond Tracts.

Petition Numbers & Dates

1. Rezoning Petition No. 3759 (Approved January 26, 1988)
2. Rezoning Petition No. GM93-043 (Approved November 17, 1992)
3. Rezoning Petition ZCC93-38 (Approved November 17, 1992)
4. Rezoning Petition 93-22RZ (Approved February 28, 1994)
5. Rezoning Amendment No. ZCC 94-197 (Approved May 24, 1994)
6. Rezoning Amendment No. GM 95-371 (Approved May 25, 1995)
7. Rezoning amendment No. GM95-575 (Approved August 22, 1995)
8. Rezoning Amendment No. GM 97-295 (Approved May 25, 1997)
9. Rezoning Petition No. 5241 (Approved April 28, 1998)
10. Rezoning Petition No. GM06-07 (Approved October 25, 2005)
11. Rezoning Petition No. ZN09-310 (Non-Substantial) (Approved June 23, 2009)

Pasco County Utility Stipulation

In consideration of Pasco County's agreement to provide potable water and/or reclaimed water to the subject property, Developer/Owner, and its successors and assigns, agree to the following:

(a) In the event of Production Failure or Shortfall by Tampa Bay Water, as set forth in section 3.19 of the Interlocal Agreement creating Tampa Bay Water, Developer/Owner shall transfer to Pasco County any and all water use permits or water use rights the Developer/Owner may have to use or consume surface or ground water within Pasco County.

(b) Prior to Developer/Owner selling water or water use permits or water use rights, Developer/Owner shall notify Pasco County, and Pasco County shall have a right of first refusal to purchase such water or water use permits or water use rights."

0' 200' 400'
SCALE: 1" = 200'

LINCKS & ASSOCIATES, INC.
5023 West Laurel Street
Tampa, Florida 33607
Tel (813) 289-0039
Fax (813) 287-0674
Lic. No. EB0004638
Engineers
Planners

DATE	01/26/2012
DESIGNED	
DRAWN	DWM
CHECKED	DWD
JOB NO.	10087

The Villages of Trinity Lakes

Preliminary Plan

REVISIONS

05/18/12	Rev. Note 10, Added NGVD 1929 Datum, Various Layout Revisions
07/19/12	Added Tract Chart, Note 21 (Swale Easements)
11/14/12	Moved Note #21 to Sheet C41
12/12/2012	Revised Plat Area to 99.94 Ac.
03/04/2013	Corrected Areas in Area Table (Park, Added Pump Station)
03/25/2013	Added Utilities to Tract G Uses, Modified Note 6
04/16/2013	Revised Tract "O" to "U" to Match Plat

David W. Desilet
PE No. 24760

SHEET C3

CONSTRUCTION PLANS 08/08/2000
TITLE

DATE: 08/08/2000
TIME: 11:05am

XREF: NONE
SCALE N/A
LAYERS: LINCKS
SPACE: PSPACE

PLOT SCALE: 1
PLOT CONFIG: LINCKS.PCP
DIR: F:\Program Files\ACAD2000\
FILE: LINCKSPROTOTYPE.dwg.DWG

E:\Work\10087_Trinity_Lakes\10087_ALTD_Alternative.dwg, Layout C3_Preliminary

Date: 04/16/13 Drawing: 10087_ALTD_Alternative.dwg

SECS. 28,29,32,&33, TWP. 26S., RNG. 17E.

ESTIMATED EARTHWORK
FILL: 204,000 CY
CUT: 204.000 CY

LEGEND:
- PROPOSED DRAINAGE INLET
- PROPOSED DRAINAGE MANHOLE
- PROPOSED MITERED END SECTION
- PROPOSED STORM DRAIN
- PROPOSED DIRECTION OF FLOW
- PROPOSED CONTROLLED DISCHARGE
- PROPOSED BREACH
- PROPOSED .
- PROPOSED .

NGS Benchmark V-668
(Location NTS)
Lat. N 28Deg11'32"
Long. W 82Deg36'05"
N 427656.392m E 140954.436m
Elev. 54.64' in NAVD 88 Datum
Elev. 55.48 Converted to NGVD 29 Datum

NGS Benchmark U-668
Lat. N 28Deg11'25"
Long. W 82Deg36'49"
Converted to State Plane Coordinates in Meters:
N 427446.920 E 139753.318
Elev. 40.67' in NAVD 88 Datum
Elev. 41.51' Converted to NGVD 29 Datum

SEE SOILS REPORT EXHIBIT FOR MUCK PROBES WITHIN COMMERCIAL PARCEL (NOT A PART OF THIS PLAT)

STATE ROAD 54
R/W VARIES

Sheets C42

Sheets C9, C13, C17, & C22

TRINITY BLVD.
200' R/W

Cool Springs Parkway
80 R/W

COMMUNITY DRIVE
120 R/W

Trinity Lakes Dr.
50 R/W

Moss Lake Loop
50 R/W

Lilyfield Ct.
50 R/W

Marsberry Ct.

Hidden Springs Dr.
50 R/W

Mile Lane
50 R/W

Sheets C6, C10, C14, & C19

Sheets C7, C11, C15, & C20

Sheets C8, C12, C16, & C21

Mile to Park

NOTE: SEASONAL HIGH WATER ELEVATIONS TAKEN FROM TABLE 1 OF THE GEOTECH REPORT DATED MAY 16, 2012 BY DRIGGERS ENGINEERING SERVICES, INC.

N
0' 200' 400'
SCALE: 1" = 200'

LINCKS & ASSOCIATES, INC.
5023 West Laurel Street
Tampa, Florida 33607
Tel (813) 289-0039
Fax (813) 287-0674
Lic. No. EB0004638
Engineers
Planners

DATE	01/26/2012
DESIGNED	
DRAWN	DWM
CHECKED	DWD
JOB NO.	10087

The Villages of Trinity Lakes
Key Map & Boring Location Map

REVISIONS

08/02/2012	Added Benchmarks, Soil Report Note in Commercial Parcel
11/14/2012	Added SHW Elevations to Borings and Ponds

David W. Desilet
PE No. 24760

SHEET C4

PLOT SCALE: 1
PLOT CONFIG: LINCKS.PCP
PLOT STYLE: COLOR.CTB (AC2000)
FILE: LINCKSPROTOTYPE.dwg DWG

DATE: 09/08/2000
TIME: 11:05am

XREF: NONE
SCALE: N/A
PLOT: 11x17 BLACKS
SPACE: PSPACE

E:\Work\10087_Trinity_Lakes\10087_ALTD_Alternative.dwg, Layout C4_Topo

Date: 01/08/13 Drawing: 10087_ALTD_Alternative.dwg

N

0' 300' 600'

SCALE: 1" = 300'

LINCKS & ASSOCIATES, INC.
5023 West Laurel Street
Tampa, Florida 33607
Tel (813) 289-0039
Fax (813) 287-0674
Lic. No. EB0004638
Engineers
Planners

DATE	01/26/2012
DESIGNED	
DRAWN	DWM
CHECKED	DWD
JOB NO.	10087

The Villages of Trinity Lakes

Stormwater Basin Map

REVISIONS

08/03/2012	Added Stormwater Model Note Regarding Input of Turn Lanes in Stormwater Model
-	Basin Lines Reflect Latest Map from AECOM
11/14/2012	Basin Lines Reflect Latest Map from AECOM
01/08/2013	Corrected 161E-TBS-OS

David W. Desilet
PE No. 24760

SHEET C5

SECS. 28,29,32,&33, TWP. 26S., RNG. 17E.

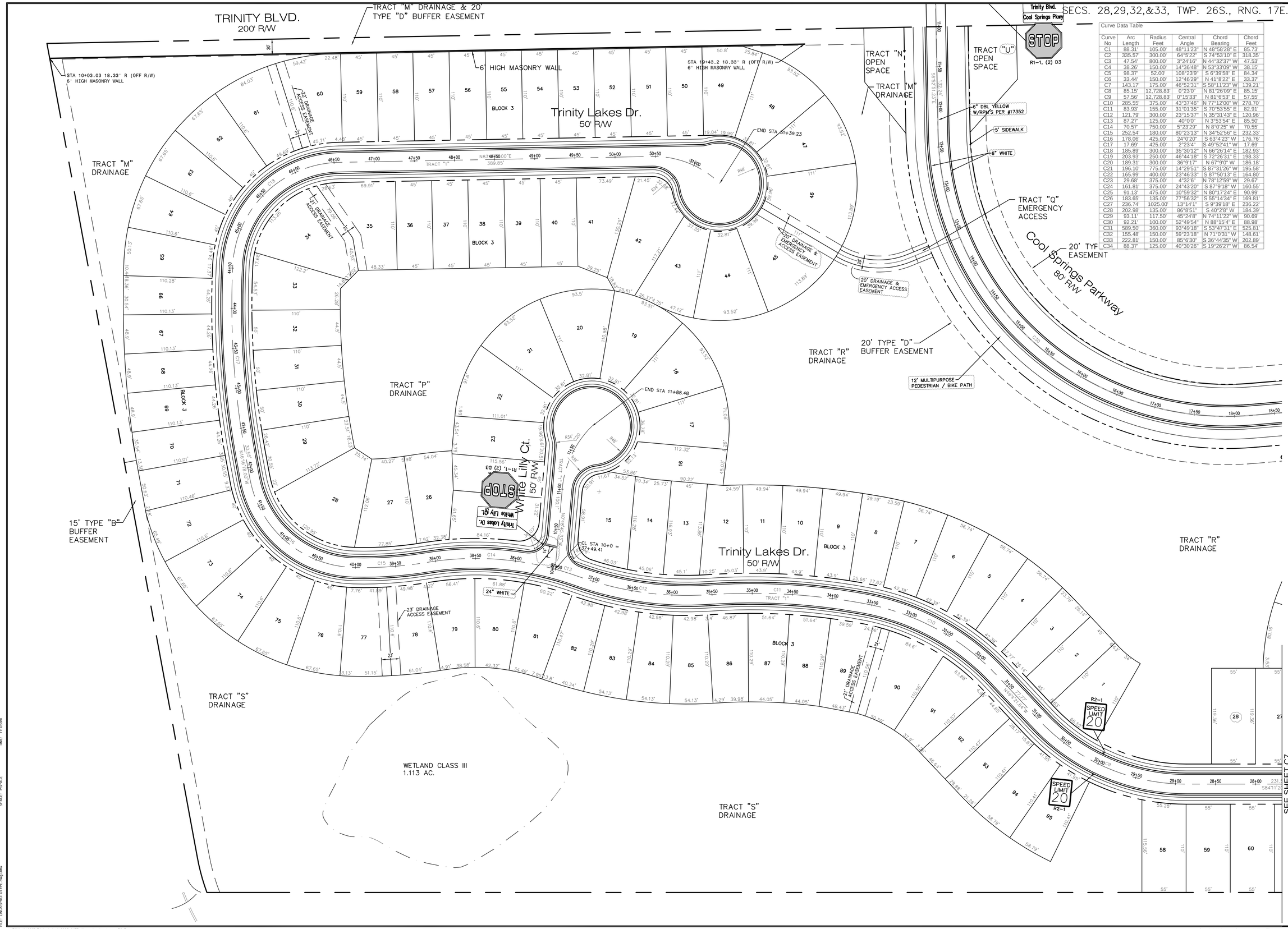

Curve Data Table

Curve No	Arc Length	Radius Feet	Central Angle	Chord Bearing	Chord Feet
C1	88.31'	105.00'	48°11'23"	N 48°58'28" E	85.73'
C2	335.57'	300.00'	64°5'22"	S 74°53'10" E	318.35'
C3	47.54'	800.00'	3°24'16"	N 44°32'37" W	47.53'
C4	38.26'	150.00'	14°36'48"	N 53°33'09" W	38.15'
C5	98.37'	52.00'	108°23'9"	S 6°39'58" E	84.34'
C6	33.44'	150.00'	12°46'29"	N 41°8'22" E	33.37'
C7	143.17'	175.00'	46°52'31"	S 58°11'23" W	139.21'
C8	85.15'	12,728.83'	0°23'0"	N 81°26'09" E	85.15'
C9	57.56'	12,728.83'	0°15'33"	N 81°6'53" E	57.55'
C10	285.55'	375.00'	43°37'46"	N 77°12'00" W	278.70'
C11	83.93'	155.00'	31°01'35"	S 70°53'55" E	82.91'
C12	121.79'	300.00'	23°15'37"	N 35°31'43" E	120.96'
C13	87.27'	125.00'	40°0'0"	N 3°53'54" E	85.50'
C14	70.57'	750.00'	5°23'29"	N 8°0'25" W	70.55'
C15	252.54'	180.00'	80°23'13"	N 34°52'56" E	232.33'
C16	178.06'	425.00'	24°0'20"	S 63°4'23" W	176.76'
C17	17.69'	425.00'	2°23'4"	S 49°52'41" W	17.69'
C18	185.89'	300.00'	35°30'12"	N 66°26'14" E	182.93'
C19	203.93'	250.00'	46°44'18"	S 72°26'31" E	198.33'
C20	189.31'	300.00'	36°9'17"	N 67°9'0" W	186.18'
C21	196.10'	775.00'	14°29'51"	S 87°31'26" W	195.58'
C22	165.99'	400.00'	23°46'33"	S 87°50'13" E	164.80'
C23	29.68'	375.00'	4°32'6"	N 78°12'59" W	29.67'
C24	161.81'	375.00'	24°43'20"	S 87°9'18" W	160.55'
C25	91.13'	475.00'	10°59'32"	N 80°17'24" E	90.99'
C26	183.65'	135.00'	77°56'32"	S 55°14'34" E	169.81'
C27	236.74'	1025.00'	13°14'1"	S 9°39'18" E	236.22'
C28	202.98'	135.00'	86°8'51"	S 40°2'8" W	184.39'
C29	93.11'	117.50'	45°24'8"	N 74°11'22" W	90.69'
C30	92.21'	100.00'	52°49'54"	N 88°15'4" E	88.98'
C31	589.50'	360.00'	93°49'18"	S 53°47'31" E	525.81'
C32	155.48'	150.00'	59°23'18"	N 71°0'31" W	148.61'
C33	222.81'	150.00'	85°6'30"	S 36°44'35" W	202.89'
C34	88.37'	125.00'	40°30'26"	S 19°26'27" W	86.54'

N

0' 50' 100'

SCALE: 1" = 50'

LINCKS & ASSOCIATES, INC.
5023 West Laurel Street
Tampa, Florida 33607
Tel (813) 289-0039
Fax (813) 287-0574
Lic. No. EB0004638
Engineers
Planners

DATE	01/26/2012		
DESIGNED		DRAWN	DWM
CHECKED	DWD	JOB NO.	10087

The Villages of Trinity Lakes

Signing, Marking & Geometry Plan

REVISIONS

06/18/2012	Rev. Per Pasco County Comments, Removed No Outlet Signs @ White Lily Ct.
11/14/2012	Corrected Tract Q (20' Drainage & Emergency Access Easement)
01/28/2013	Detectable Strips were Removed Sta 11+0, RPM's Added to Cool Springs & White on
	Cool Springs (EOP)
04/18/2013	Revised Tract "D" to 5' to Match Plat

David W. Desilet
PE No. 24760

SHEET
C6

DATE: 08/08/2000
TIME: 11:05am

XREF: NONE
SCALE: N/A
LAYERS: ALL LINCKS
SPACE: PSPACE

PLOT SCALE: 1
PLOT CONFIG: LINCKS.PCP
PLOT STYLE: Plot Style Table\LA020000\
FILE: LINCKSPROTOTYPE.dwg.DWG

E:\Work\10087_Trinity_Lakes\10087_ALTD_Alternative.dwg, Layout C6_Geom

Date: 04/19/13 Drawing: 10087_ALTD_Alternative.dwg

SECS. 28,29,32,&33, TWP. 26S., RNG. 17E.

Curve Data Table

Curve No	Arc Length	Radius Feet	Central Angle	Chord Bearing	Chord Feet
C1	88.31'	105.00'	48°11'23"	N 48°58'28" E	85.73'
C2	335.57'	300.00'	64°5'22"	S 74°53'10" E	318.35'
C3	47.54'	800.00'	3°24'16"	N 44°32'37" W	47.53'
C4	38.26'	150.00'	14°36'48"	N 53°33'09" W	38.15'
C5	98.37'	52.00'	108°23'9"	S 6°39'58" E	84.34'
C6	33.44'	150.00'	12°46'29"	N 41°8'22" E	33.37'
C7	143.17'	175.00'	46°52'31"	S 58°11'23" W	139.21'
C8	85.15'	12,728.83'	0°23'0"	N 81°26'09" E	85.15'
C9	57.56'	12,728.83'	0°15'33"	N 81°6'53" E	57.55'
C10	285.55'	375.00'	43°37'46"	N 77°12'00" W	278.70'
C11	83.93'	155.00'	31°01'35"	S 70°53'55" E	82.91'
C12	121.79'	300.00'	23°15'37"	N 35°31'43" E	120.96'
C13	87.27'	125.00'	40°0'0"	N 3°5'3'54" E	85.50'
C14	70.57'	750.00'	5°23'29"	N 8°0'25" W	70.55'
C15	252.54'	180.00'	80°23'13"	N 34°52'56" E	232.33'
C16	178.06'	425.00'	24°0'20"	S 63°4'23" W	176.76'
C17	17.69'	425.00'	2°23'4"	S 49°52'41" W	17.69'
C18	185.89'	300.00'	35°30'12"	N 66°26'14" E	182.93'
C19	203.93'	250.00'	46°44'18"	S 72°26'31" E	198.33'
C20	189.31'	300.00'	36°9'17"	N 67°9'0" W	186.18'
C21	196.10'	775.00'	14°29'51"	S 87°31'26" W	195.58'
C22	165.99'	400.00'	23°46'33"	S 87°50'13" E	164.80'
C23	29.68'	375.00'	4°32'6"	N 78°12'59" W	29.67'
C24	161.81'	375.00'	24°43'20"	S 87°9'18" W	160.55'
C25	91.13'	475.00'	10°59'32"	N 80°17'24" E	90.99'
C26	183.65'	135.00'	77°56'32"	S 55°14'34" E	169.81'
C27	236.74'	1025.00'	13°14'1"	S 9°39'18" E	236.22'
C28	202.98'	135.00'	86°8'51"	S 40°2'8" W	184.39'
C29	93.11'	117.50'	45°24'8"	N 74°11'22" W	90.69'
C30	92.21'	100.00'	52°49'54"	N 88°15'4" E	88.98'
C31	589.50'	360.00'	93°49'18"	S 53°47'31" E	525.81'
C32	155.48'	150.00'	59°23'18"	N 71°0'31" W	148.61'
C33	222.81'	150.00'	85°6'30"	S 36°44'35" W	202.89'
C34	88.37'	125.00'	40°30'26"	S 19°26'27" W	86.54'

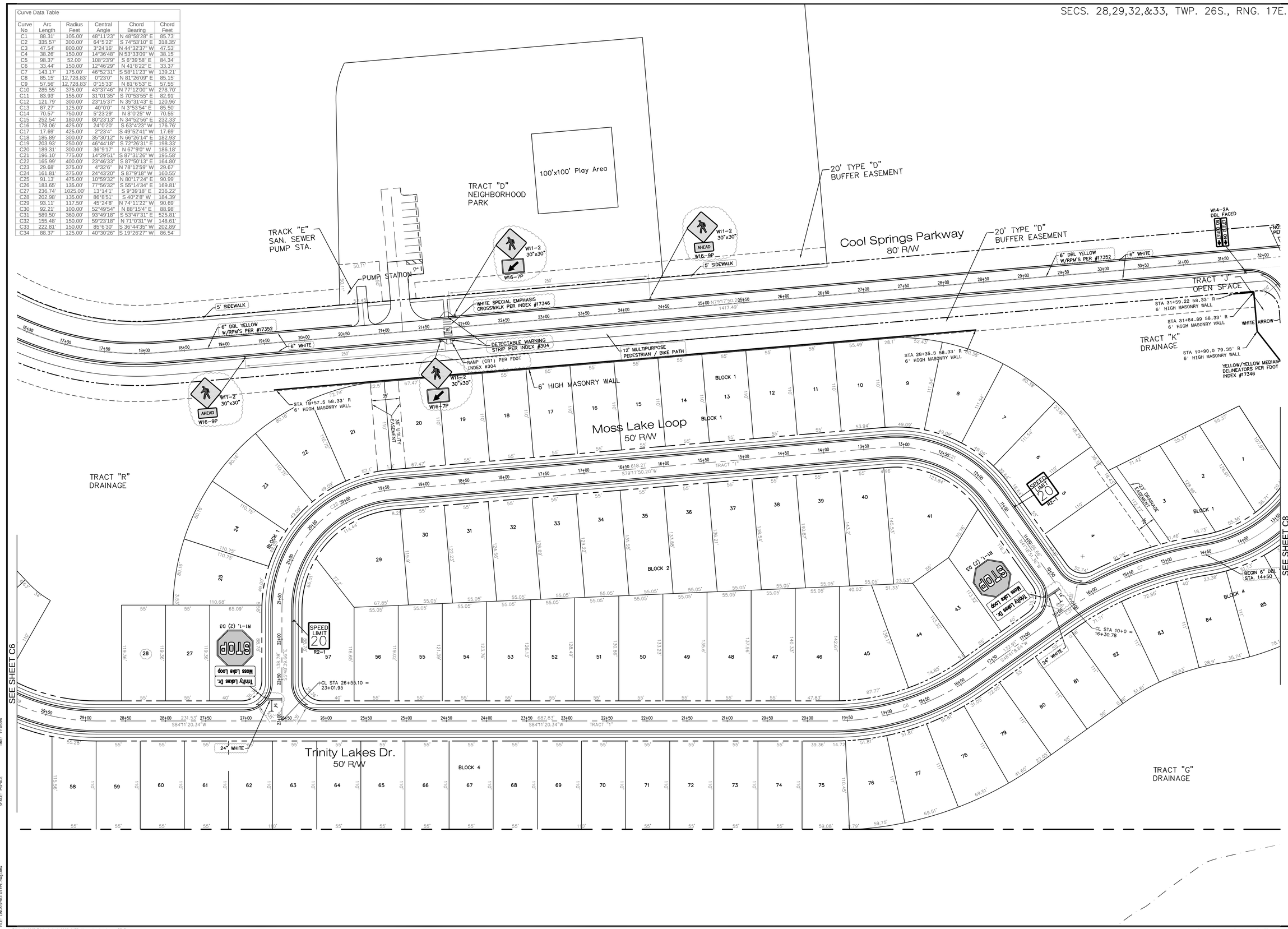

N

0' 50' 100'

SCALE: 1" = 50'

LINCKS & ASSOCIATES, INC.
5023 West Laurel Street
Tampa, Florida 33607
Tel (813) 289-0039
Fax (813) 287-0674
Lic. No. EB0004638
Engineers
Planners

DATE	01/26/2012		
DESIGNED		DRAWN	DWM
CHECKED	DWD	JOB NO.	10087

The Villages of Trinity Lakes

Signing, Marking & Geometry Plan

REVISIONS

06/18/2012	Rev. Per Pasco County Comments, Added Stop Bars, Station / Offset for Walls
09/06/2012	Removed Reference to Crosswalk @ Moss Lake Loop Int.
11/14/2012	Added Crosswalk & HC Ramps, Signs for Crossing to Park
01/29/2013	Detectable Strips were Removed Sta. 28+50, RPM's Added to Cool Springs, 6" White on Cool Springs (EOP)
-	-
-	-
-	-
-	-
-	-

David W. Desilet
PE No. 24760

SHEET C7

DATE: 08/08/2000
TIME: 11:05am

XREF: NONE
SCALE: N/A
LAYOUT: LINCKS
SPACE: PSPACE

PLOT SCALE: 1
PLOT CONFIG: LINCKS.PCP
PLOT STYLE: LINCKS.CTB
FILE: L:\PROJECTS\2000\10087\ALTD\10087 ALTD Alternative.dwg

E:\Work\10087_Trinity_Lakes\10087_ALTD_Alternative.dwg, Layout C7_Geom

Date: 01/29/13 Drawing: 10087_ALTD_Alternative.dwg

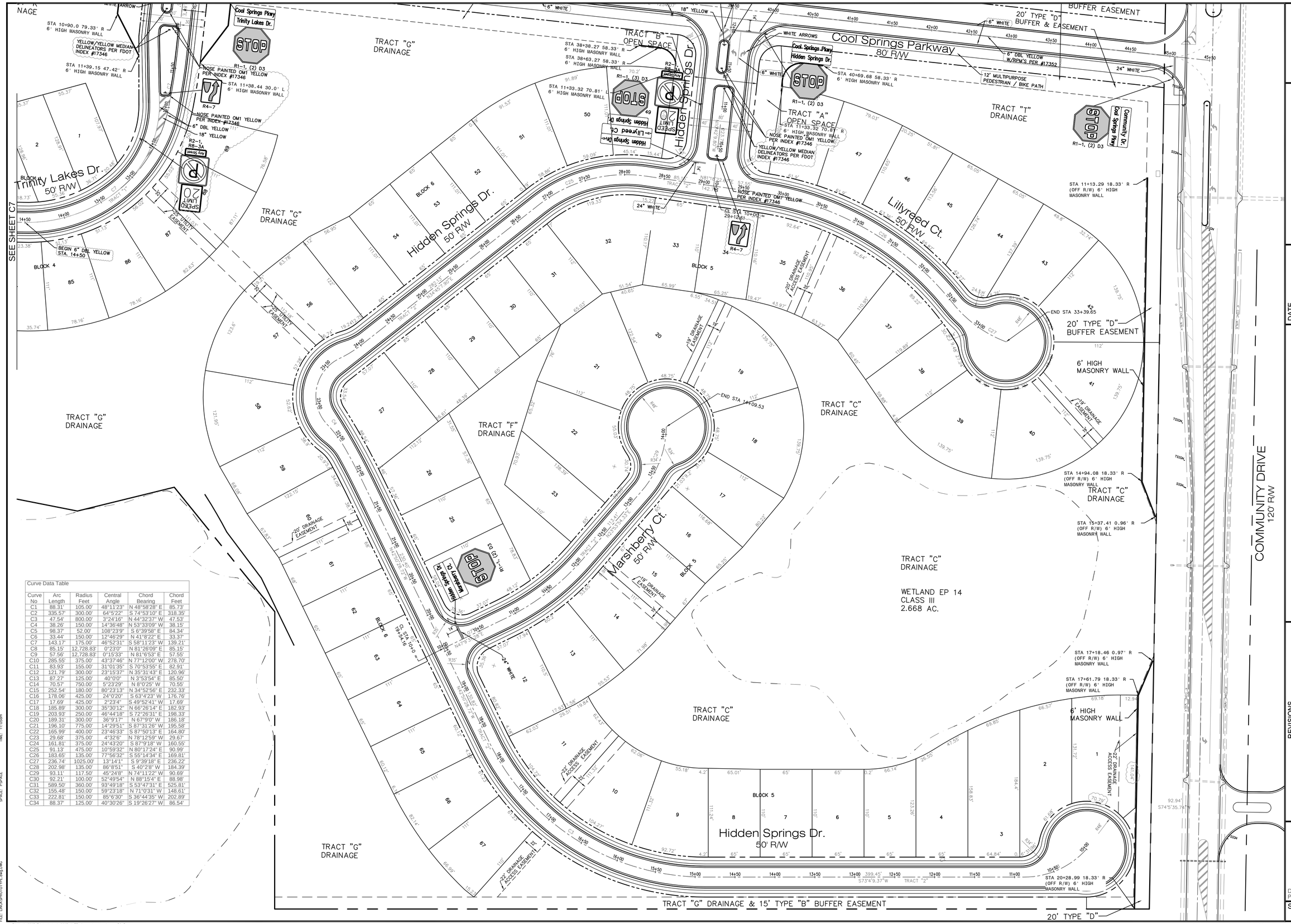

Curve Data Table

Curve No	Arc Length	Radius Feet	Central Angle	Chord Bearing	Chord Feet
C1	88.31'	105.00'	48°11'23"	N 48°58'28" E	85.73'
C2	335.57'	300.00'	64°5'22"	S 74°53'10" E	318.35'
C3	47.54'	800.00'	3°24'16"	N 44°32'37" W	47.53'
C4	38.26'	150.00'	14°36'48"	N 53°33'09" W	38.15'
C5	98.37'	52.00'	108°23'9"	S 6°39'58" E	84.34'
C6	33.44'	150.00'	12°46'29"	N 41°8'22" E	33.37'
C7	143.17'	175.00'	46°52'31"	S 58°11'23" W	139.21'
C8	85.15'	12,728.83'	0°23'0"	N 81°26'09" E	85.15'
C9	57.56'	12,728.83'	0°15'33"	N 81°6'53" E	57.55'
C10	285.55'	375.00'	43°37'46"	N 77°12'00" W	278.70'
C11	83.93'	155.00'	31°01'35"	S 70°53'55" E	82.91'
C12	121.79'	300.00'	23°15'37"	N 35°31'43" E	120.96'
C13	87.27'	125.00'	40°0'0"	N 3°53'54" E	85.50'
C14	70.57'	750.00'	5°23'29"	N 8°0'25" W	70.55'
C15	252.54'	180.00'	80°23'13"	N 34°52'56" E	232.33'
C16	178.06'	425.00'	24°0'20"	S 63°4'23" W	176.76'
C17	17.69'	425.00'	2°23'4"	S 49°52'41" W	17.69'
C18	185.89'	300.00'	35°30'12"	N 66°26'14" E	182.93'
C19	203.93'	250.00'	46°44'18"	S 72°26'31" E	198.33'
C20	189.31'	300.00'	36°9'17"	N 67°9'0" W	186.18'
C21	196.10'	775.00'	14°29'51"	S 87°31'26" W	195.58'
C22	165.99'	400.00'	23°46'33"	S 87°50'13" E	164.80'
C23	29.68'	375.00'	4°32'6"	N 78°12'59" W	29.67'
C24	161.81'	375.00'	24°43'20"	S 87°9'18" W	160.55'
C25	91.13'	475.00'	10°59'32"	N 80°17'24" E	90.99'
C26	183.65'	135.00'	77°56'32"	S 55°14'34" E	169.81'
C27	236.74'	1025.00'	13°14'1"	S 9°38'18" E	236.22'
C28	202.98'	135.00'	86°8'51"	S 40°2'8" W	184.39'
C29	93.11'	117.50'	45°24'8"	N 74°11'22" W	90.69'
C30	92.21'	100.00'	52°49'54"	N 88°15'4" E	88.98'
C31	589.50'	360.00'	93°49'18"	S 53°47'31" E	525.81'
C32	155.48'	150.00'	59°23'18"	N 71°0'31" W	148.61'
C33	222.81'	150.00'	85°6'30"	S 36°44'35" W	202.89'
C34	88.37'	125.00'	40°30'26"	S 19°26'27" W	86.54'

LINCKS & ASSOCIATES, INC.
5023 West Laurel Street
Tampa, Florida 33607
Tel (813) 289-0039
Fax (813) 287-0674
Lic. No. EB0004638
Engineers
Planners

DATE	01/26/2012
DESIGNED	
DRAWN	DWM
CHECKED	DWD
JOB NO.	10087

The Villages of Trinity Lakes

Signing, Marking & Geometry Plan

REVISIONS

06/18/2012	Rev. Per Pasco County Comments, Added Station / Offsets to Walls
11/14/2012	Corrected Signs, Sign Graphics & Markings per Pasco County Comments
01/28/2013	RPM's Added to Cool Springs, 6" White on Cool Springs (EOP)

David W. Desilet
PE No. 24760

SHEET C8

XREF: NONE
SCALE: N/A
PLOT STYLE: NONE
SPACE: PSPACE

DATE: 08/08/2000
TIME: 11:05am

PLOT SCALE: 1
PLOT CONFIG: LINCKS.PCP
DWG: E:\Work\10087_Trinity_Lakes\10087_ALTD_Alternative\2000\
FILE: LINCKSPROTOTYPE.dwg DWG

E:\Work\10087_Trinity_Lakes\10087_ALTD_Alternative.dwg, Layout C8_Geom

Date: 01/29/13 Drawing: 10087_ALTD_Alternative.dwg

SECS. 28,29,32,&33, TWP. 26S., RNG. 17E.

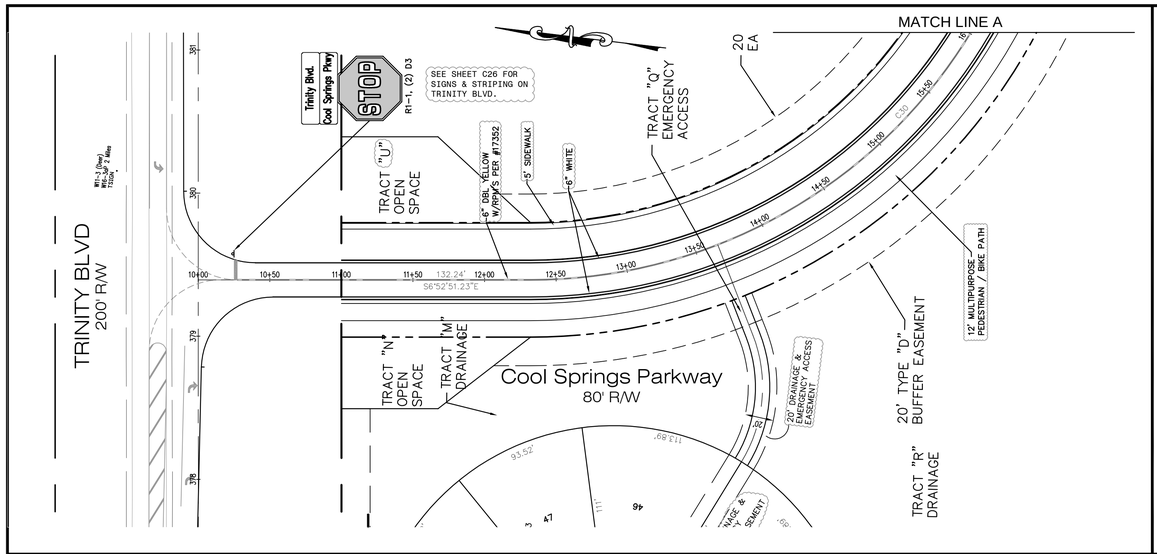

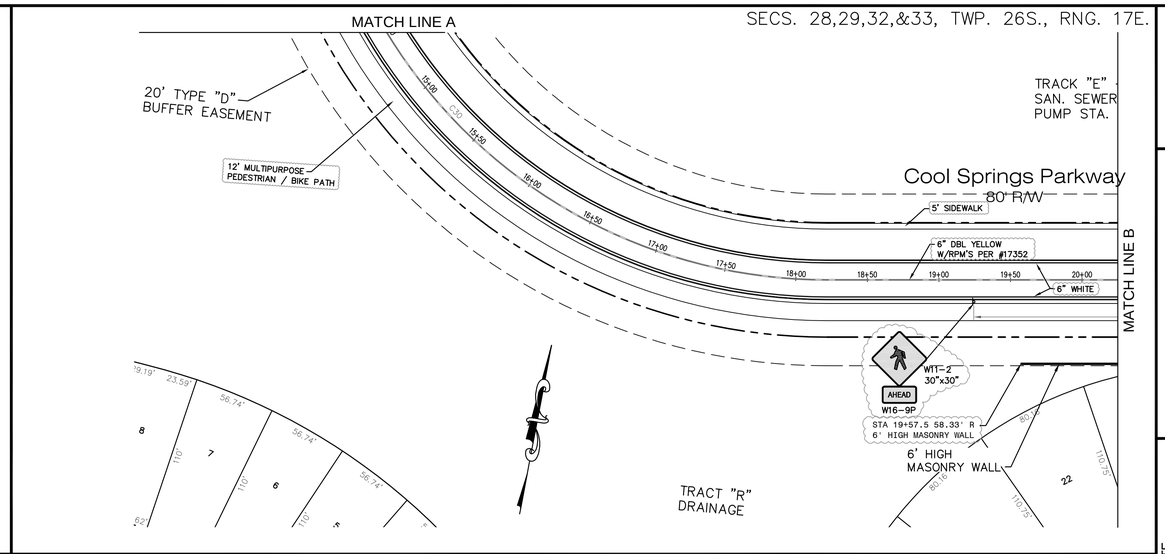

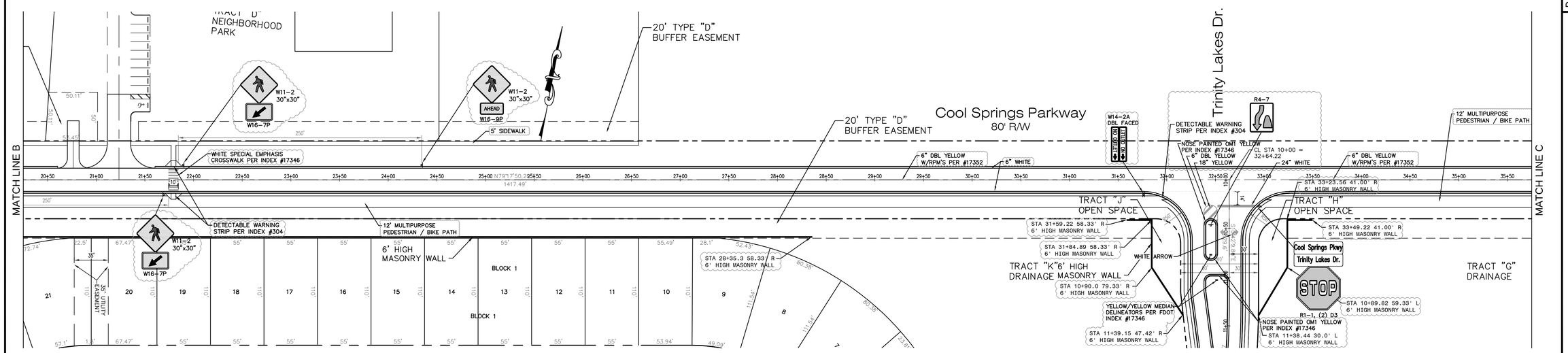

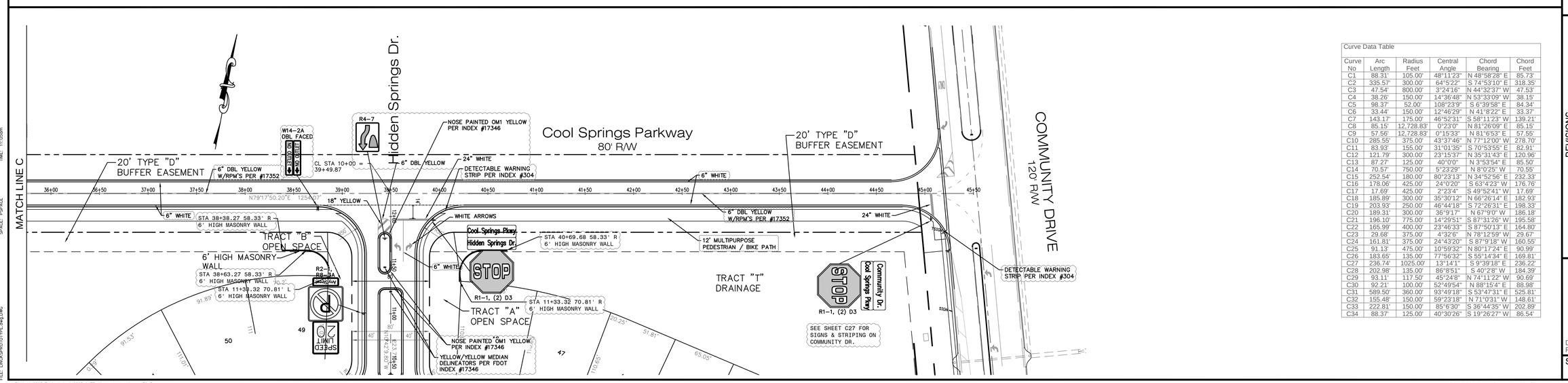

Curve Data Table

Curve No	Arc Length	Radius Feet	Central Angle	Chord Bearing	Chord Feet
C1	88.31'	105.00'	48°11'23"	N 48°58'28" E	85.73'
C2	335.57'	300.00'	64°5'22"	S 74°53'10" E	318.35'
C3	47.54'	800.00'	3°24'16"	N 44°32'37" W	47.53'
C4	38.26'	150.00'	14°36'48"	N 53°33'09" W	38.15'
C5	98.37'	52.00'	108°23'9"	S 6°39'58" E	84.34'
C6	33.44'	150.00'	12°46'29"	N 41°8'22" E	33.37'
C7	143.17'	175.00'	46°52'31"	S 58°11'23" W	139.21'
C8	85.15'	12,728.83'	0°23'0"	N 81°26'09" E	85.15'
C9	57.56'	12,728.83'	0°15'33"	N 81°6'53" E	57.55'
C10	285.55'	375.00'	43°37'46"	N 77°12'00" W	278.70'
C11	83.93'	155.00'	31°01'35"	S 70°53'55" E	82.91'
C12	121.79'	300.00'	23°15'37"	N 35°31'43" E	120.96'
C13	87.27'	125.00'	40°0'0"	N 3°53'54" E	85.50'
C14	70.57'	750.00'	5°23'29"	N 8°0'25" W	70.55'
C15	252.54'	180.00'	80°23'13"	N 34°52'56" E	232.33'
C16	178.06'	425.00'	24°0'20"	S 63°4'23" W	176.76'
C17	17.69'	425.00'	2°23'4"	S 49°52'41" W	17.69'
C18	185.89'	300.00'	35°30'12"	N 66°26'14" E	182.93'
C19	203.93'	250.00'	46°44'18"	S 72°26'31" E	198.33'
C20	189.31'	300.00'	36°9'17"	N 67°9'0" W	186.18'
C21	196.10'	775.00'	14°29'51"	S 87°31'26" W	195.58'
C22	165.99'	400.00'	23°46'33"	S 87°50'13" E	164.80'
C23	29.68'	375.00'	4°32'6"	N 78°12'59" W	29.67'
C24	161.81'	375.00'	24°43'20"	S 87°9'18" W	160.55'
C25	91.13'	475.00'	10°59'32"	N 80°17'24" E	90.99'
C26	183.65'	135.00'	77°56'32"	S 55°14'34" E	169.81'
C27	236.74'	1025.00'	13°14'1"	S 9°39'18" E	236.22'
C28	202.98'	135.00'	86°8'51"	S 40°28' W	184.39'
C29	93.11'	117.50'	45°24'8"	N 74°11'22" W	90.69'
C30	92.21'	100.00'	52°49'54"	N 88°15'4" E	88.98'
C31	589.50'	360.00'	93°49'18"	S 53°47'31" E	525.81'
C32	165.48'	150.00'	59°23'18"	N 71°0'31" W	148.61'
C33	222.81'	150.00'	85°6'30"	S 36°44'35" W	202.89'
C34	88.37'	125.00'	40°30'26"	S 19°26'27" W	86.54'

0' 50' 100'
SCALE: 1" = 50'

LINCKS & ASSOCIATES, INC.
5023 West Laurel Street
Tampa, Florida 33607
Tel (813) 289-0039
Fax (813) 287-0574
Lic. No. EB0004638
Engineers
Planners

DATE	01/26/2012
DESIGNED	
DRAWN	DWM
CHECKED	DWD
JOB NO.	10087

The Villages of Trinity Lakes

Signing, Marking & Geometry Plan

REVISIONS

06/18/2012	Revised Per Pasco County Comments, Added Station / Offsets to Walls
08/24/12	Added Dbl Faced 'No Outlet' signs along Cool Springs Pkwy, Rev. No Parking Sign Graphics
-	Added HP, Ramp & Crosswalk to Park, With Ped. Crossing Signs
11/14/2012	Corrected Titled CI 20' Drainage & Emergency Access Easement)
01/29/2013	Trinity Added to Cool Springs, (E' White on Cool Springs (EOP)
02/25/2013	Detectable Strips were Removed Sta 11+01.28-50
04/19/2013	Revised Tract "D" to "D" to Match Plat

David W. Desilet
PE No. 24760

SHEET C9

DATE: 08/08/2000
TIME: 11:05am
XREF: NONE
SCALE: N/A
LAYOUT: PLANS
SPACE: PSPACE
PLOT SCALE: 1
PLOT CONFIG: LINCKS.PCP
DWG: E:\Work\10087_Trinity_Lakes\ALTO2000\
FILE: LINCKSPHOTOTYPE.dwg DWG

E:\Work\10087_Trinity_Lakes\10087_ALTD_Alternative.dwg, Layout C9_Geom

Date: 04/19/13 Drawing: 10087_ALTD_Alternative.dwg

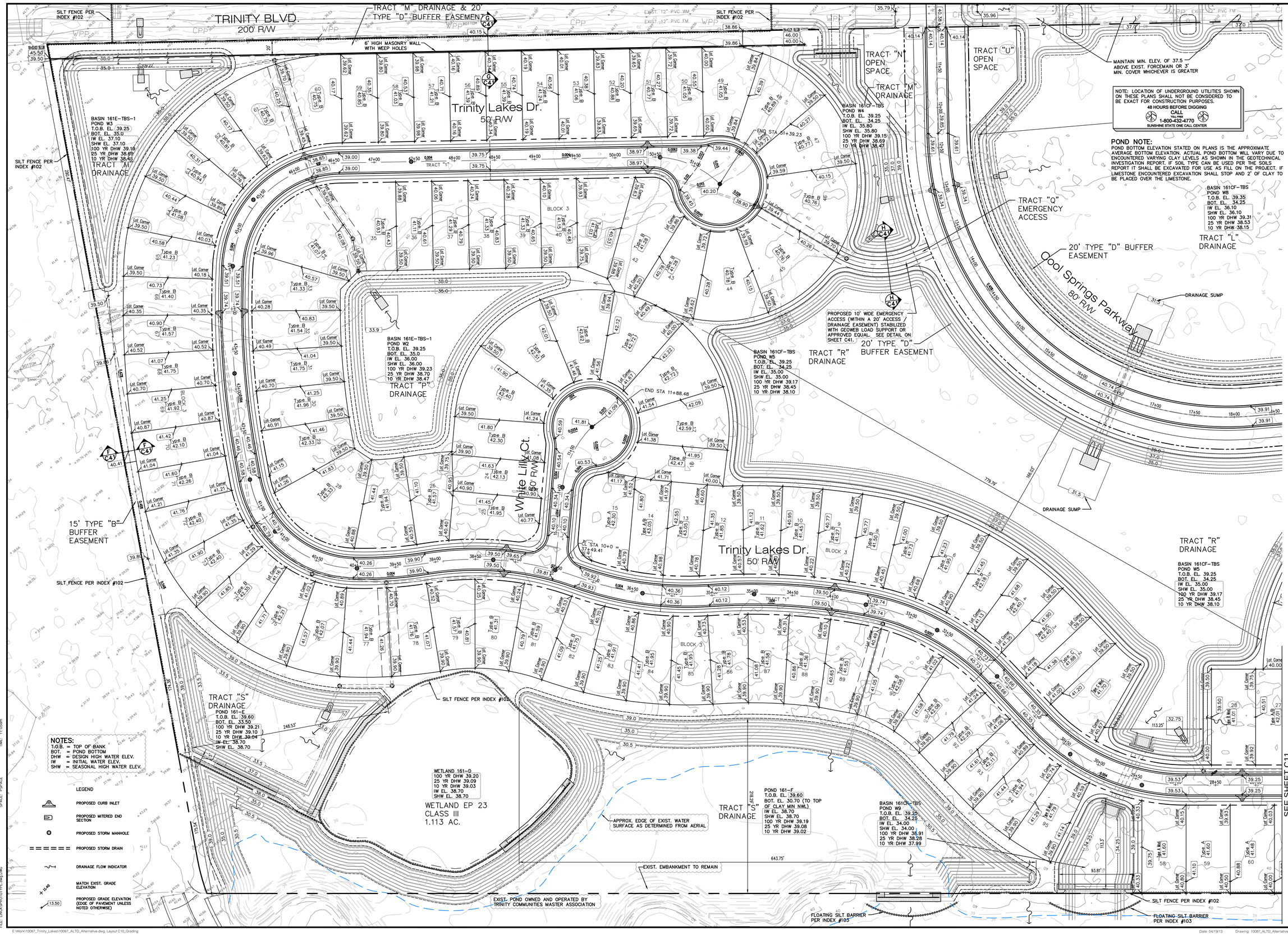

N

0' 50' 100'

SCALE: 1" = 50'

LINCKS & ASSOCIATES, INC.
5023 West Laurel Street
Tampa, Florida 33607
Tel (813) 289-0039
Fax (813) 287-0574
Lic. No. EB0004638
Engineers
Planners

DATE	01/26/2012
DESIGNED	
DRAWN	DWM
CHECKED	DWD
JOB NO.	10087

The Villages of Trinity Lakes

GRADING PLAN

REVISIONS

03/05/2012	Corrected Labels for Sections F & G
08/30/2012	Added Pond Dim's, Exist. Contours for Pond 161-F, Corrected Section Sheet.
- -	Added Exist. Notes on Pond 161-F, Additional Grades to Walls, Revised Pond Data
11/14/2012	Revised Reference to Tract "O" (20' Drainage & Emergency Access Easement)
04/19/2013	Revised Tract "O" to "U" to Match Plat

David W. Desilet
PE No. 24760

SHEET C10

DATE: 08/08/2000
TIME: 11:06am

XREF: NONE
SCALE: 1/A
LAYOUT: ANSI D
SPACE: PSPACE

PLOT SCALE: 1
PLOT CONFIG: LINCKS.PCP
PLOT STYLE: LINCKS-COLOR.CTB
FILE: LINCKSPROTOTYPE.dwg DWG

E:\Work\10087_Trinity_Lakes\10087_ALTD_Alternative.dwg, Layout C10_Grading

Date: 04/19/13 Drawing: 10087_ALTD_Alternative.dwg

MIN. COVER WHICHEVER IS GREATER

LEGEND

- PROPOSED CURB INLET
- PROPOSED MITERED END SECTION
- PROPOSED STORM MANHOLE
- PROPOSED STORM DRAIN
- DRAINAGE FLOW INDICATOR
- MATCH EXIST. GRADE ELEVATION
- PROPOSED GRADE ELEVATION (EDGE OF PAVEMENT UNLESS NOTED OTHERWISE)

NOTES:
T.O.B. = TOP OF BANK
BOT. = POND BOTTOM
DHW = DESIGN HIGH WATER ELEV.
IW = INITIAL WATER ELEV.
SHW = SEASONAL HIGH WATER ELEV.

NOTE: LOCATION OF UNDERGROUND UTILITIES SHOWN ON THESE PLANS SHALL NOT BE CONSIDERED TO BE EXACT FOR CONSTRUCTION PURPOSES.
48 HOURS BEFORE DIGGING
CALL
TOLL FREE
1-800-432-4770
SUNSHINE STATE ONE CALL CENTER

POND NOTE:
POND BOTTOM ELEVATION STATED ON PLANS IS THE APPROXIMATE AVERAGE BOTTOM ELEVATION. ACTUAL POND BOTTOM WILL VARY DUE TO ENCOUNTERED VARYING CLAY LEVELS AS SHOWN IN THE GEOTECHNICAL INVESTIGATION REPORT. IF SOIL TYPE CAN BE USED PER THE SOILS REPORT IT SHALL BE EXCAVATED FOR USE AS FILL ON THE PROJECT. IF LIMESTONE ENCOUNTERED EXCAVATION SHALL STOP AND 2' OF CLAY TO BE PLACED OVER THE LIMESTONE.

N
0' 50' 100'
SCALE: 1" = 50'

BASIN 161CF-TBS
POND W8
T.O.B. EL. 39.35
BOT. EL. 34.25
IW EL. 36.10
SHW EL. 36.10
100 YR DHW 39.31
25 YR DHW 38.53
10 YR DHW 38.15

TRACT "L" DRAINAGE

"D" BUFFER

TO BE LEFT NATURAL GRADE

TRACT "D" NEIGHBORHOOD PARK

100'x100' Play Area

TRACK "E" SAN. SEWER PUMP STA.

3" CRUSHED CONCRETE (COMPACTED) SEE LANDSCAPE SHEET L5 FOR PARKING LOT DETAILS

DRIVEWAYS TO BE CONSTRUCTED PER FDOT INDEX #515

Cool Springs Parkway
80' R/W

20' TYPE "D" BUFFER EASEMENT

TRACT "I" OPEN SPACE

6' HIGH MASONRY WALL WITH WEEP HOLES

TRACT "K" DRAINAGE

BASIN 161-C3
POND W6
T.O.B. EL. 39.35
BOT. EL. 34.5
IW EL. 36.30
SHW EL. 36.30
100 YR DHW 39.33
25 YR DHW 38.53
10 YR DHW 38.15

Moss Lake Loop
50' R/W

TRACT "R" DRAINAGE

BASIN 161CF-TBS
POND W5
T.O.B. EL. 39.25
BOT. EL. 34.25
IW EL. 35.00
SHW EL. 35.00
100 YR DHW 39.17
25 YR DHW 38.45
10 YR DHW 38.10

Trinity Lakes Dr.
50' R/W

CL STA 10+0 = 16+30.78

CL STA 28+35.10 = 23+01.95

POND E2A
T.O.B. EL. 42.60
BOT. EL. 34.50
IW EL. 37.20
SHW EL. 37.20
100 YR DHW 42.33
25 YR DHW 42.03
10 YR DHW 41.79

TRACT "G" DRAINAGE

SEE SHEET C10

SEE SHEET C12

SILT FENCE PER INDEX #102

APPROX. EDGE OF EXIST. WATER SURFACE AS DETERMINED FROM AERIAL

POND 161-C

Heritage Springs Parcel B - Phase 1
HERITAGE SPRINGS VILLAGE 25

HERITAGE SPRINGS POND
TOB EL. 41.30
100 YR DHW 41.38

WETLAND EP 18
CLASS III
4.316 AC.

LINCKS & ASSOCIATES, INC.
5023 West Laurel Street
Tampa, Florida 33607
Tel (813) 289-0039
Fax (813) 287-0574
Lic. No. EB0004638
Engineers
Planners

DATE	01/26/2012
DESIGNED	
DRAWN	DWM
CHECKED	DWD
JOB NO.	10087

The Villages of Trinity Lakes

GRADING PLAN

REVISIONS

08/08/2012	Added Additional Grades to Walls, Parking Lot Improvement Data, Revised Pond Data
11/14/2012	Rev. Lot 28 to Type A1 Per PC Comments
02/25/2013	Removed Evergreen ESB Pond Data

David W. Desilet
PE No. 24760

SHEET
C11

PLOT SCALE: 1
PLOT CONFIG: LINCKS.PCP
PLOT STYLE: COLOR.CTB (02/20/07)
FILE: LAOKSPROTOTYPE-Leg.DWG

DATE: 08/08/2000
TIME: 11:05am

XREF: NONE
SCALE: N/A
LAYERS: ALL PLOTS
SPACE: PSPACE

E:\Work\10087_Trinity_Lakes\10087_ALTD_Alternative.dwg, Layout C11_Grading

Date: 02/25/13 Drawing: 10087_ALTD_Alternative.dwg

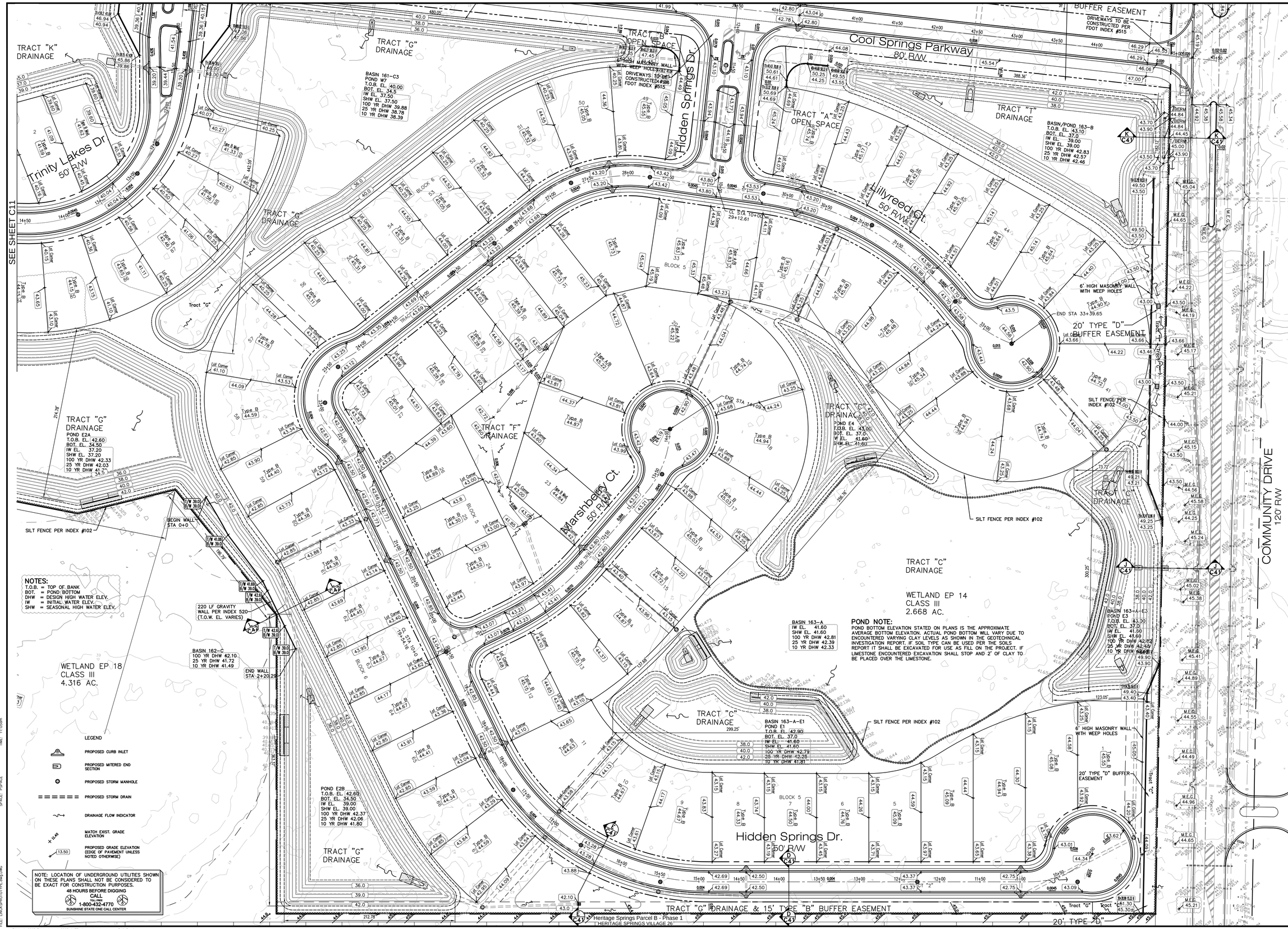

NOTES:

T.O.B. = TOP OF BANK
BOT. = POND BOTTOM
DHW = DESIGN HIGH WATER ELEV.
IW = INITIAL WATER ELEV.
SHW = SEASONAL HIGH WATER ELEV.

POND NOTE:

POND BOTTOM ELEVATION STATED ON PLANS IS THE APPROXIMATE AVERAGE BOTTOM ELEVATION. ACTUAL POND BOTTOM WILL VARY DUE TO ENCOUNTERED VARYING CLAY LEVELS AS SHOWN IN THE GEOTECHNICAL INVESTIGATION REPORT. IF SOIL TYPE CAN BE USED PER THE SOILS REPORT IT SHALL BE EXCAVATED FOR USE AS FILL ON THE PROJECT. IF LIMESTONE ENCOUNTERED EXCAVATION SHALL STOP AND 2' OF CLAY TO BE PLACED OVER THE LIMESTONE.

LEGEND

- PROPOSED CURB INLET
- PROPOSED MITERED END SECTION
- PROPOSED STORM MANHOLE
- PROPOSED STORM DRAIN
- DRAINAGE FLOW INDICATOR
- MATCH EXIST. GRADE ELEVATION
- PROPOSED GRADE ELEVATION (EDGE OF PAVEMENT UNLESS NOTED OTHERWISE)

NOTE: LOCATION OF UNDERGROUND UTILITIES SHOWN ON THESE PLANS SHALL NOT BE CONSIDERED TO BE EXACT FOR CONSTRUCTION PURPOSES.
48 HOURS BEFORE DIGGING CALL TOLL FREE 1-800-432-4770
SUNSHINE STATE ONE CALL CENTER

LINCKS & ASSOCIATES, INC.
5023 West Laurel Street
Tampa, Florida 33607
Tel (813) 289-0039
Fax (813) 287-0574
Lic. No. EB0004638
Engineers
Planners

DATE	01/26/2012
DESIGNED	
DRAWN	DWM
CHECKED	DWD
JOB NO.	10087

The Villages of Trinity Lakes

GRADING PLAN

REVISIONS

08/08/2012	Added Grades to Walls, Tract E & Tract D (South PL), Sections J & K, Revised Pond Data
12/18/2012	Added Gravity Wall & Grade Elevations, Section L-L
01/28/2013	Revised Wall Location Adjacent Lot 1

David W. Desilet
PE No. 24760

SHEET C12

E:\Work\10087_Trinity_Lakes\10087_ALTD_Alternative.dwg, Layout C12_Grading
Date: 01/30/13 Drawing: 10087_ALTD_Alternative.dwg
PLOT SCALE: 1
PLOT CONFIG: LINCKS.PCP
PLOT STYLE: LINCKS.CTB
FILE: LINCKS\PROTOTYPE.dwg DWG
DATE: 08/08/2000
TIME: 11:05am
XREF: NONE
SCALE: N/A
PLOT: LINCKS
SPACE: PSPACE

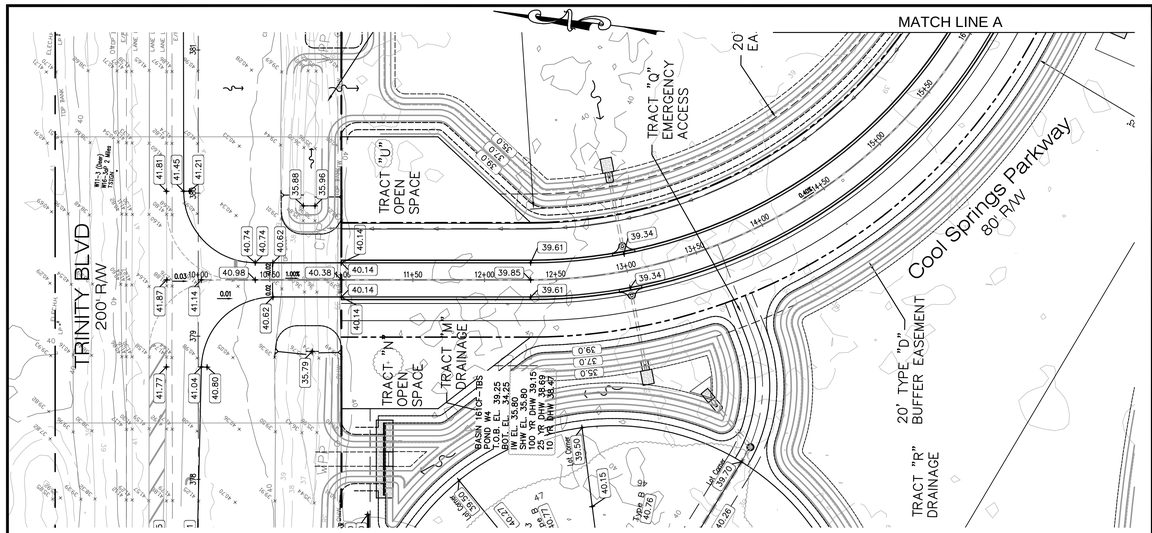

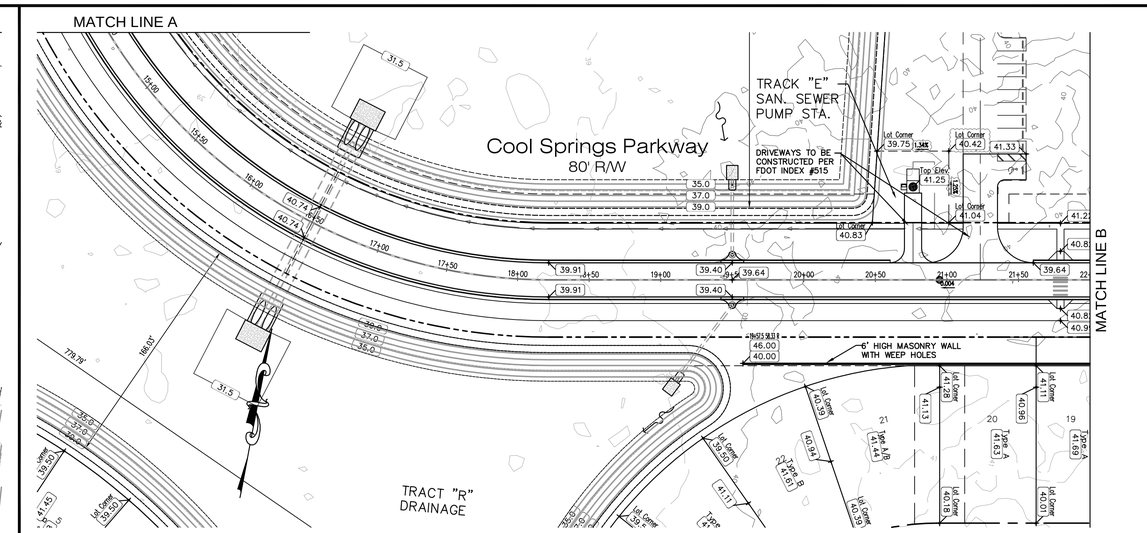

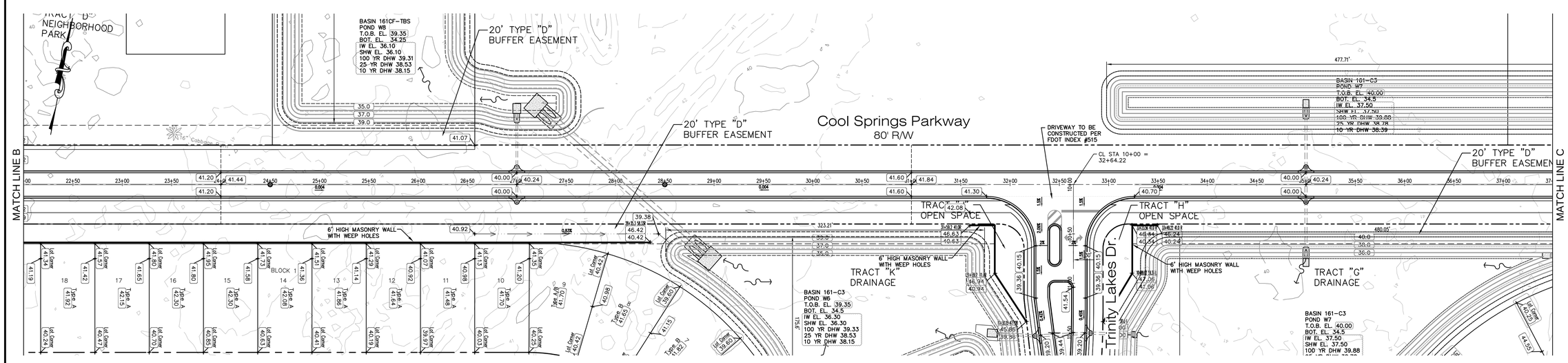

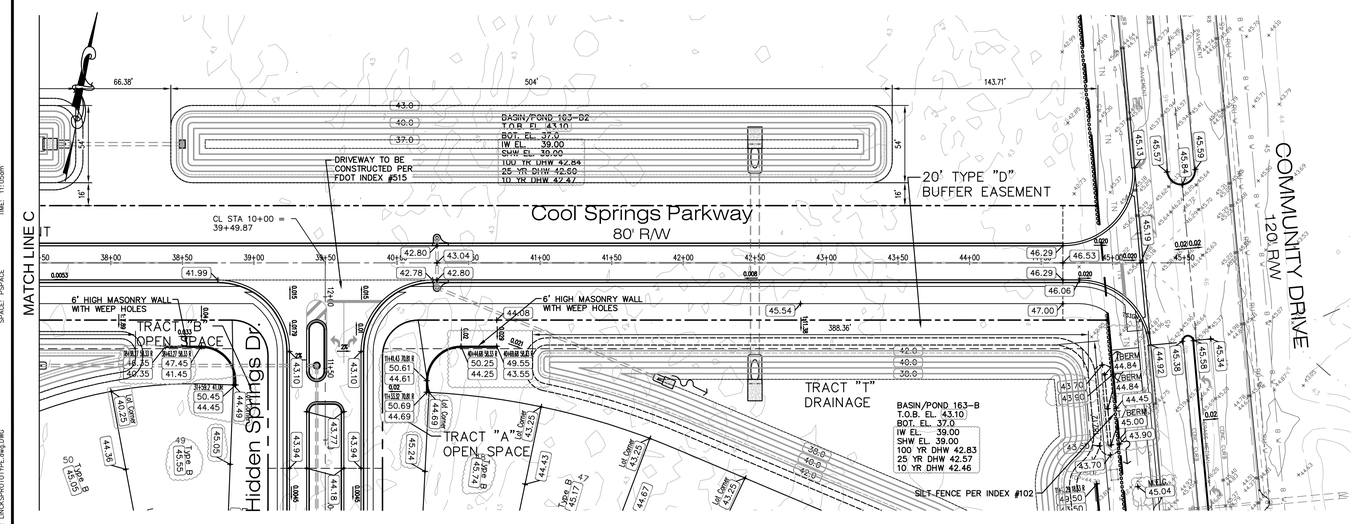

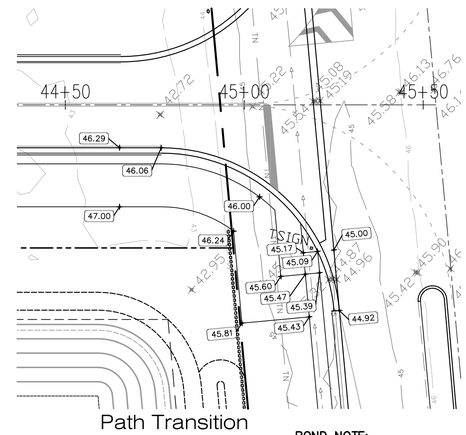

Path Transition
Grading Detail
1"=20'

NOTES:
T.O.B. = TOP OF BANK
BOT. = POND BOTTOM
DHW = DESIGN HIGH WATER ELEV.
IW = INITIAL WATER ELEV.
SHW = SEASONAL HIGH WATER ELEV.

LEGEND

- PROPOSED CURB INLET
- PROPOSED MITERED END SECTION
- PROPOSED STORM MANHOLE
- PROPOSED STORM DRAIN
- DRAINAGE FLOW INDICATOR
- MATCH EXIST. GRADE ELEVATION (+ 13.45)
- PROPOSED GRADE ELEVATION (EDGE OF PAVEMENT UNLESS NOTED OTHERWISE) (13.50)

POND NOTE:
POND BOTTOM ELEVATION STATED ON PLANS IS THE APPROXIMATE AVERAGE BOTTOM ELEVATION. ACTUAL POND BOTTOM WILL VARY DUE TO ENCOUNTERED VARYING CLAY LEVELS AS SHOWN IN THE GEOTECHNICAL INVESTIGATION REPORT. IF SOIL TYPE CAN BE USED PER THE SOILS REPORT IT SHALL BE EXCAVATED FOR USE AS FILL ON THE PROJECT. IF LIMESTONE ENCOUNTERED EXCAVATION SHALL STOP AND 2' OF CLAY TO BE PLACED OVER THE LIMESTONE.

NOTE: LOCATION OF UNDERGROUND UTILITIES SHOWN ON THESE PLANS SHALL NOT BE CONSIDERED TO BE EXACT FOR CONSTRUCTION PURPOSES.
48 HOURS BEFORE DIGGING
CALL
SUNSHINE
1-800-432-4770
SUNSHINE STATE ONE CALL CENTER

0' 50' 100'
SCALE: 1" = 50'

LINCKS & ASSOCIATES, INC.
5023 West Laurel Street
Tampa, Florida 33607
Tel (813) 289-0039
Fax (813) 287-0574
Lic. No. EB0004638
Engineers
Planners

DATE	01/26/2012
DESIGNED	
DRAWN	DWM
CHECKED	DWD
JOB NO.	10087

The Villages of Trinity Lakes

GRADING PLAN

REVISIONS

08/08/2012	Added Additional Grades to Walls, Revised Pond Data
04/19/2013	Revised Tract "D" to "D" to Match Plat

David W. Desilet
PE No. 24760

SHEET C13

DATE: 08/08/2000
TIME: 11:05am
XREF: NONE
SCALE: N/A
PLOT: 1=1 INCHES
SPACE: PSPACE
PLOT SCALE: 1
PLOT CONFIG: LINCKS.PCP
PLOT STYLE: LINCKS.CTB
FILE: LINCKSPROTOTYPE.dwg DWG

E:\Work\10087_Trinity_Lakes\10087_ALTD_Alternative.dwg, Layout C13_Grading

Date: 04/19/13 Drawing: 10087_ALTD_Alternative.dwg

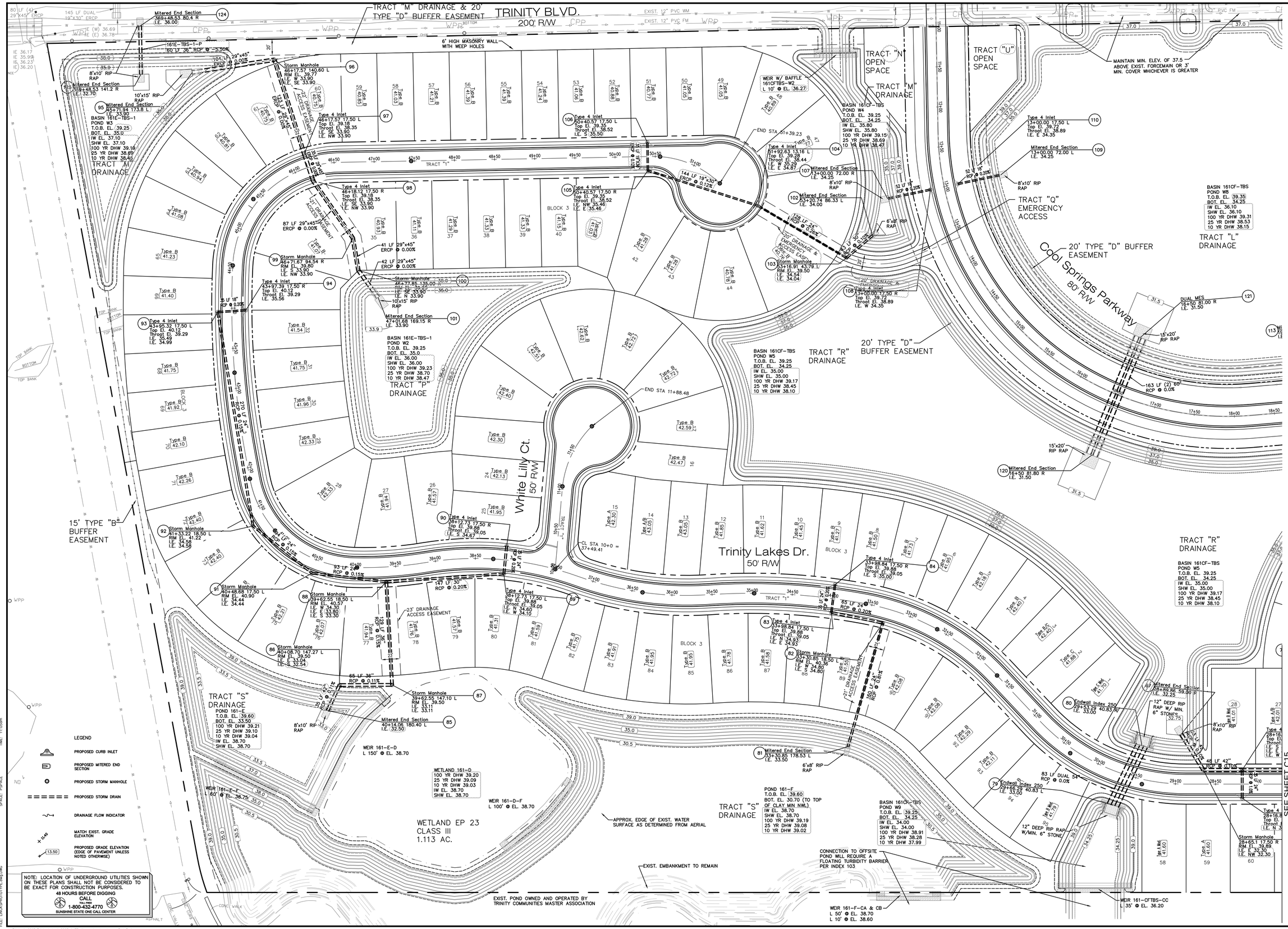

N

0' 50' 100'

SCALE: 1" = 50'

LINCKS & ASSOCIATES, INC.
5023 West Laurel Street
Tampa, Florida 33607
Tel (813) 289-0039
Fax (813) 287-0574
Lic. No. EB0004638
Engineers
Planners

DATE	01/26/2012
DESIGNED	
DRAWN	DWM
CHECKED	DWD
JOB NO.	10087

The Villages of Trinity Lakes

DRAINAGE PLAN

REVISIONS

08/08/2012	Corrected Structure Labels, Revised Pond Data, Pipe from Str 104 - 103
01/28/2013	Corrected Structures #90-#95, #106-#102 to Match Stormdb
02/25/2013	Corrected E Inv. for Str 58 (33.80)
04/19/2013	Revised Tract "D" to "D" to Match Plat

David W. Desilet
PE No. 24760

SHEET C14

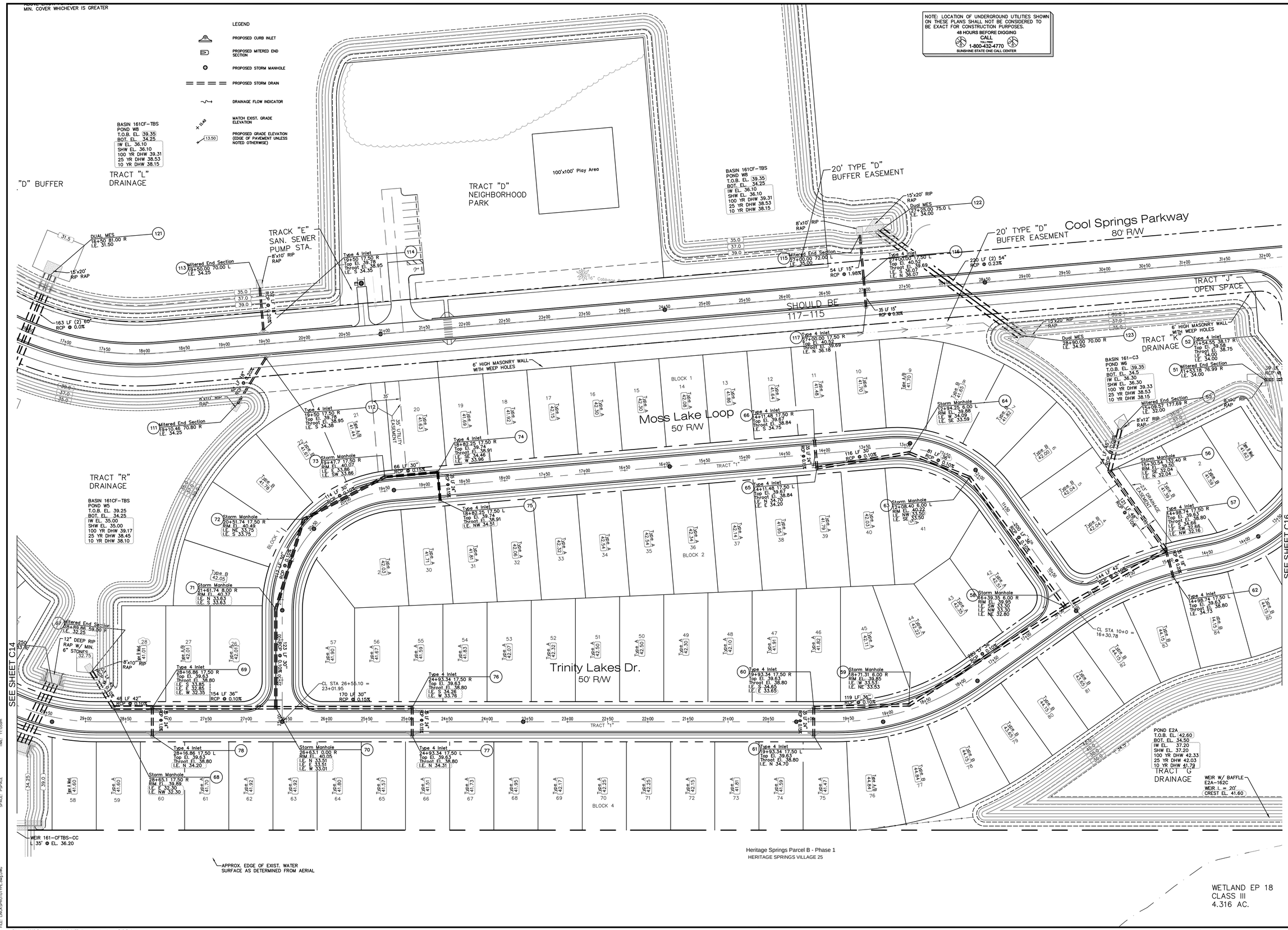

LINCKS & ASSOCIATES, INC.
5023 West Laurel Street
Tampa, Florida 33607
Tel (813) 289-0039
Fax (813) 287-0574
Lic. No. EB0004638
Engineers
Planners

DATE	01/26/2012
DESIGNED	
DRAWN	DWM
CHECKED	DWD
JOB NO.	10087

The Villages of Trinity Lakes

DRAINAGE PLAN

REVISIONS

08/08/2012	Corrected Structure Labels, Revised Pond Data
01/28/2013	Corrected Structures #61-65, #66-#69 to Match Stormtab
02/25/2013	Corrected Weir E2A-162C to Match Other Plans (Elev. 41.60)

David W. Desilet
PE No. 24760

SHEET C15

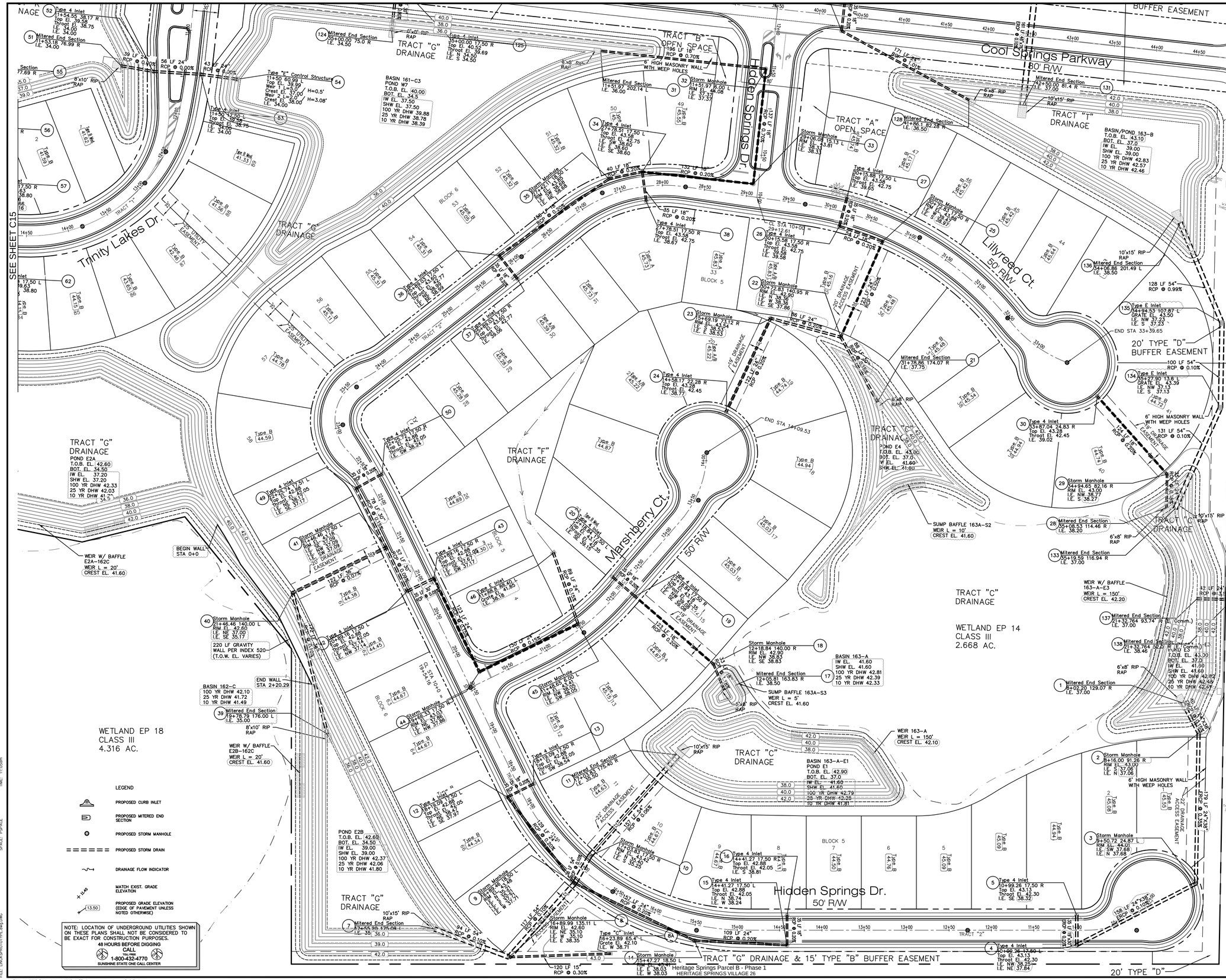

LEGEND

- PROPOSED CURB INLET
- PROPOSED MITERED END SECTION
- PROPOSED STORM MANHOLE
- PROPOSED STORM DRAIN
- DRAINAGE FLOW INDICATOR
- 11.40 MATCH EXIST. GRADE ELEVATION
- 13.50 PROPOSED GRADE ELEVATION (EDGE OF PAVEMENT UNLESS NOTED OTHERWISE)

NOTE: LOCATION OF UNDERGROUND UTILITIES SHOWN ON THESE PLANS SHALL NOT BE CONSIDERED TO BE EXACT FOR CONSTRUCTION PURPOSES.
48 HOURS BEFORE DIGGING CALL
TOLL FREE
1-800-432-4770
SUNSHINE STATE ONE CALL CENTER

PLOT SCALE: 1
PLOT CONFIG: LINCKS.PCP
PLOT STYLE: LINCKS.CTB
FILE: L:\NCS\PROTOTYPE.dwg DWG

DATE: 08/08/2000
TIME: 11:05am

XREF: NONE
SCALE: N/A
PLOT: LINCKS
SPACE: PSPACE

E:\Work\10087_Trinity_Lakes\10087_ALTD_Alternative.dwg, Layout C16_Drainage

Date: 01/30/13 Drawing: 10087_ALTD_Alternative.dwg

N

0' 50' 100'
SCALE: 1" = 50'

LINCKS & ASSOCIATES, INC.
5023 West Laurel Street
Tampa, Florida 33607
Tel (813) 289-0039
Fax (813) 287-0574
Lic. No. EB0004638
Engineers
Planners

DATE	01/26/2012
DESIGNED	
DRAWN	DWM
CHECKED	DWD
JOB NO.	10087

The Villages of Trinity Lakes

DRAINAGE PLAN

REVISIONS

08/08/2012	Corrected Str 46 & 48 to Type "E" Inlet, Structure Labels, Revised Pond Data, Pipe from 23-22
09/06/2012	Revised Weir Elev's for E2A-162C, E2B-162C, 163-A-E3, 163-A, 163A-S3, 163A-S2
12/18/2012	Corrected Weir Elev's for E2A-162C, E2B-162C, 163-A-E3, & 163A-S2 To Match Sheet C41
-	Added 220 LF Gravity Wall, Rev Inv's from #40 to #39, #11 to #10
-	
-	
-	

David W. Desilet
PE No. 24760

SHEET
C16

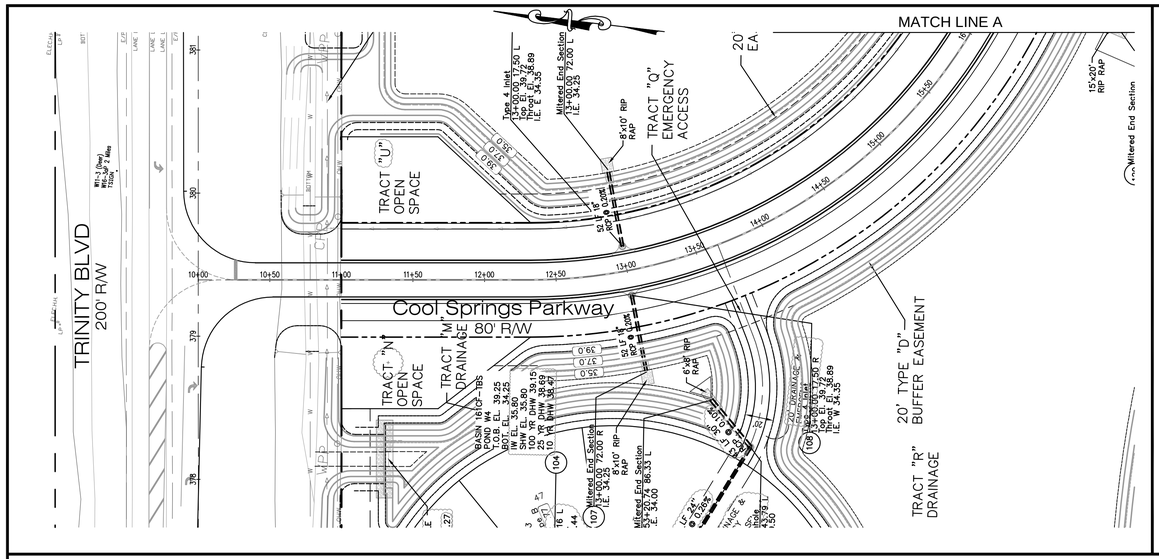

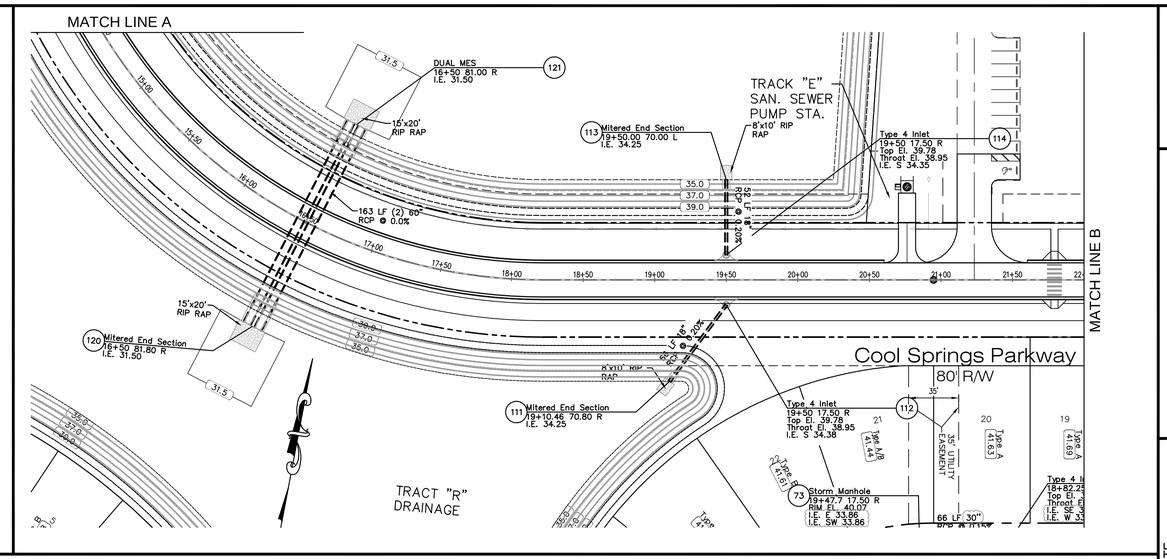

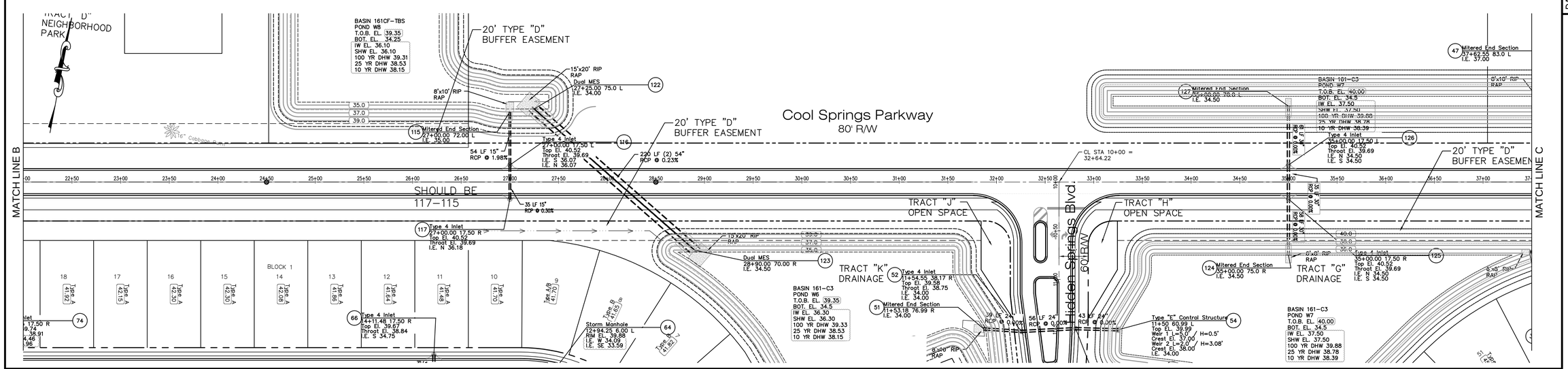

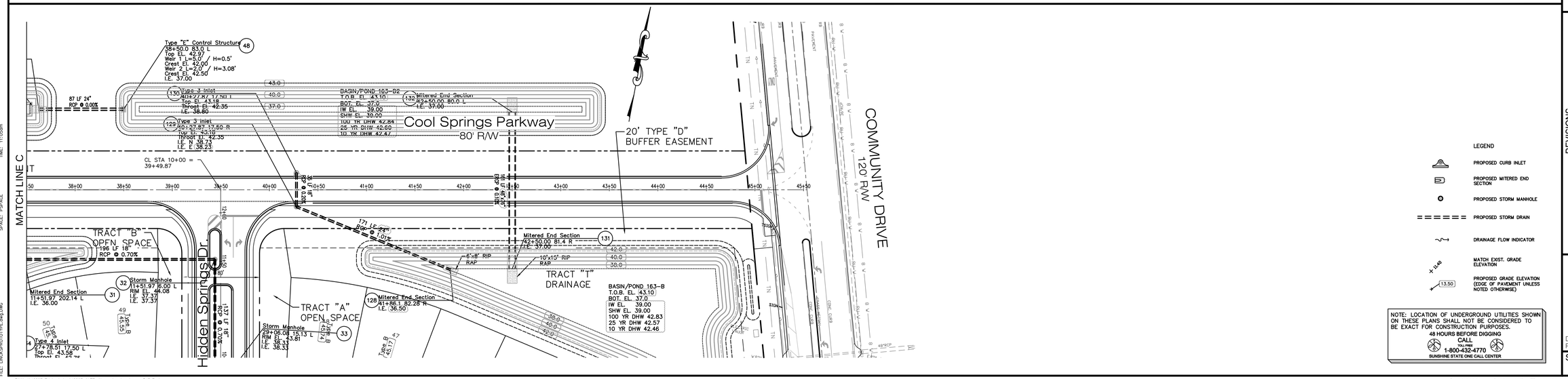

LEGEND

- PROPOSED CURB INLET
- PROPOSED MITERED END SECTION
- PROPOSED STORM MANHOLE
- PROPOSED STORM DRAIN
- DRAINAGE FLOW INDICATOR
- 11.48 — MATCH EXIST. GRADE ELEVATION
- 13.50 — PROPOSED GRADE ELEVATION (EDGE OF PAVEMENT UNLESS NOTED OTHERWISE)

NOTE: LOCATION OF UNDERGROUND UTILITIES SHOWN ON THESE PLANS SHALL NOT BE CONSIDERED TO BE EXACT FOR CONSTRUCTION PURPOSES.
48 HOURS BEFORE DIGGING
CALL
811
1-800-432-4770
SUNSHINE STATE ONE CALL CENTER

0' 50' 100'
SCALE: 1" = 50'

LINCKS & ASSOCIATES, INC.
5023 West Laurel Street
Tampa, Florida 33607
Tel (813) 289-0039
Fax (813) 287-0574
Lic. No. EB0004638
Engineers
Planners

DATE	01/26/2012
DESIGNED	
DRAWN	DWM
CHECKED	DWD
JOB NO.	10087

The Villages of Trinity Lakes

DRAINAGE PLAN

REVISIONS

08/08/2012	Corrected Structure Labels, Revised Pond Data
01/29/2013	Corrected Str #132-#131, #130-#128 to Match Stormtab
04/19/2013	Revised Tract "D" to "J" to Match Plat

David W. Desilet
PE No. 24760

SHEET
C17

SECS. 28,29,32,&33, TWP. 26S., RNG. 17E.

STATE ROAD 54
R/W VARIES

EXIST. 64" RCP TAMPA BAY WM
EXIST. 12" PVC FM
EXIST. 12" PVC WM
EXIST. 24" DIP WM
EXIST. 20" DIP REUSE WM
EXIST. 20" DIP REUSE WM (RECENTLY CONSTRUCTED)
EXIST. 12" PVC FM
EXIST. 8" PVC WM
CONNECT TO EXIST. REUSE WATERMAIN W/8"x20" REDUCER
ABANDONED 20" DIP REUSE WM
EXIST. PUMP STA.
EXIST. 8" PVC WM
EXIST. 4" PVC FM
PROP. 8" PVC REUSE WM
ABANDONED 8" PVC REUSE WM

TRINITY BLVD.
200' R/W

CONNECT TO EXIST. 12" PVC WM
CONNECT TO EXIST. 12" PVC FM
EXIST. 64" RCP TAMPA BAY WM
EXIST. 12" PVC WM
EXIST. 12" PVC FM
PROP. 6" FM (1,010 LF)
PROP. 6" WM
PROP. PUMP STA.
PROP. COMM. SEWER SERVICE
PROP. 4" REUSE WM

Future Commercial Tract
38.81 Ac.

Cool Springs Parkway
80' R/W

COMMUNITY DRIVE
120' R/W

Trinity Lakes Dr
BLOCK 3
PROP. 4" REUSE WM
PROP. 6" WM
PROP. 2" WM
PROP. 6" WM
White Lilly Ct.
50 R/W
West Village
PROP. 3" REUSE WM
ASSUMED 500 GPM FIRE DESIGN POINT (3,252 LF)
PROP. 6" WM
BLOCK 3
PROP. 4" REUSE WM (2,419 LF)
BEGIN PROP. 4" REUSE WM (WEST VILLAGE)
BLOCK 1
PROP. 6" WM
PROP. 4" REUSE WM (2,216 LF)
Moss Lake Loop
BLOCK 2
South Village
PROP. 6" WM
Trinity Lakes Dr.
BLOCK 4
PROP. 4" REUSE WM
BEGIN PROP. 4" REUSE WM
Lillyreed Ct.
BLOCK 5
East Village
PROP. 3" REUSE WM
PROP. 4" WM
PROP. 4" REUSE WM
Marsberry Ct.
BLOCK 6
PROP. 6" WM
PROP. 6" REUSE WM (1,525 LF)
Hidden Springs Dr.
BLOCK 5
CONNECT TO EXIST. 8" PVC WM
PROP. 6" WM
CONNECT TO PROP. 8" PVC REUSE WM
ABANDONED 8" PVC REUSE WM
PROP. 8" PVC REUSE WM
Interlaken Dr.

Knoll Loop
Cadway Ct.
Lakestone Dr.

NOTE: LOCATION OF UNDERGROUND UTILITIES SHOWN ON THESE PLANS SHALL NOT BE CONSIDERED TO BE EXACT FOR CONSTRUCTION PURPOSES.
48 HOURS BEFORE DIGGING
CALL
TOLL FREE
1-800-432-4770
SUNSHINE STATE ONE CALL CENTER

NOTE: FIREMAIN IS 6,504 LF TOTAL.
DESIGN POINT IS BASED UPON LENGTH OF 3,252 LF.

LEGEND

- PROPOSED SAN. MANHOLE
- PROPOSED SAN. SEWER
- PROPOSED WATER MAIN
- RU-V PROPOSED REUSE WATER
- PROPOSED FORCE MAIN
- GAS PROPOSED GAS LINE
- PROPOSED STORM DRAIN
- EXISTING UTILITIES TO BE REMOVED
- PROPOSED FIRE HYDRANT & GATE VALVE
- PROPOSED CHLORINE INJECTION/TESTING POINT

N
0' 150' 300'
SCALE: 1" = 150'

LINCKS & ASSOCIATES, INC.
5023 West Laurel Street
Tampa, Florida 33607
Tel (813) 289-0039
Fax (813) 287-0674
Lic. No. EB0004638
Engineers
Planners

DATE	09/13/2011
DESIGNED	
DRAWN	DWM
CHECKED	DWD
JOB NO.	10087

The Villages of Trinity Lakes

MASTER UTILITY PLAN

REVISIONS

06/12/2012	Revised Reuse Water Sizes
08/08/2012	Added 4" Reuse WM on Cool Springs Pkwy, ARV's On Trinity Lakes, Hidden Springs, Moss Lake Loop, & Cool Springs Pkwy (WM, Reuse & FM)
12/11/2012	Removed 2" WM Along Cool Springs, Added 1" WM Between Lots 20 & 21 to Pump Sta.

David W. Desilet
PE No. 24760

SHEET
C18

XREF: NONE
SCALE: N/A
PLOT STYLE: NONE
SPACE: PSPACE

DATE: 08/08/2000
TIME: 11:05am

PLOT SCALE: 1
PLOT CONFIG: LINCKS.PCP
PLOT STYLE: LINCKS.CTB
FILE: LINCKSPROTOTYPE-Leg.DWG

E:\Work\10087_Trinity_Lakes\10087_ALTD_Alternative.dwg, Layout:C18_Utility

Date: 01/15/13 Drawing: 10087_ALTD_Alternative.dwg

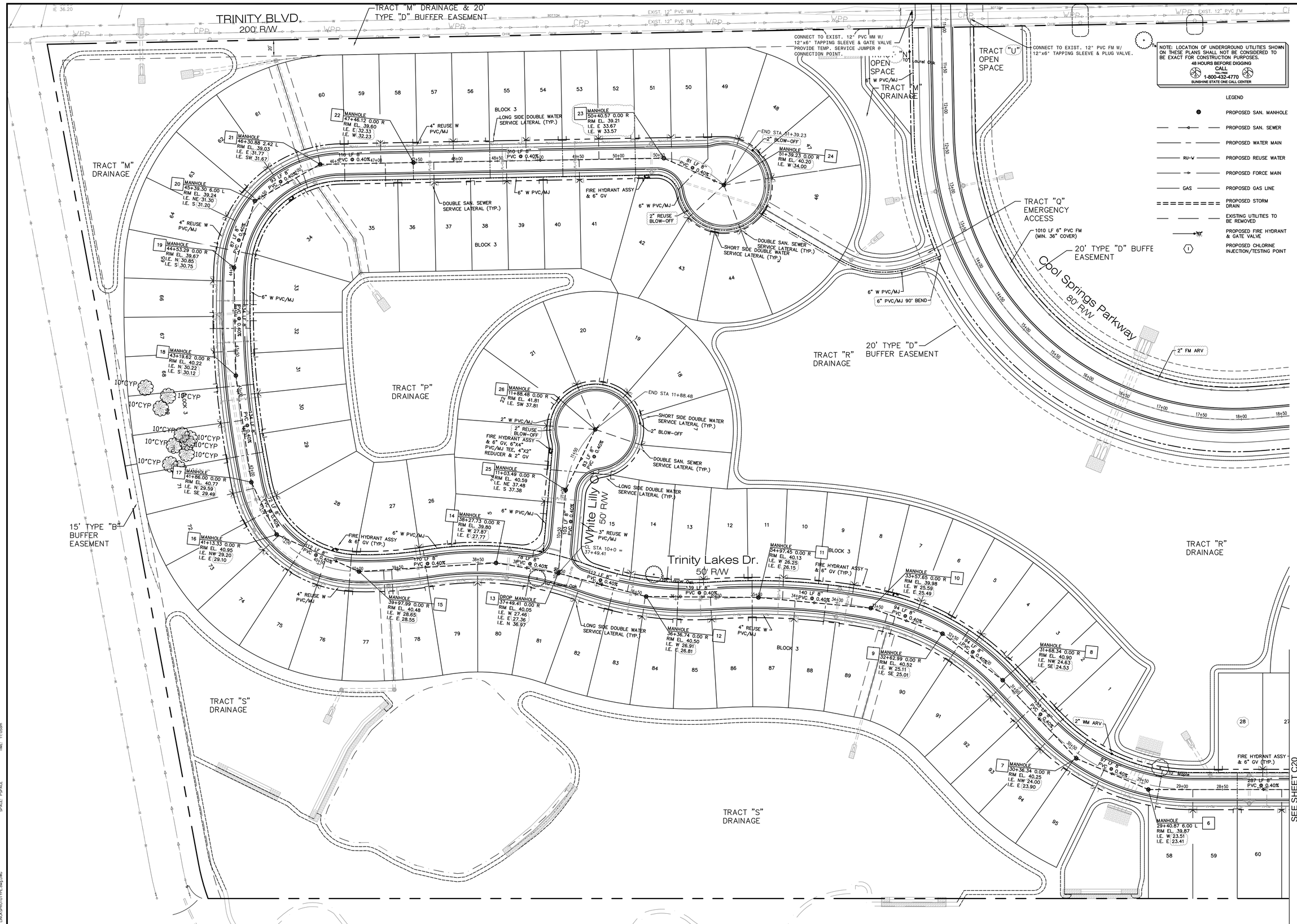

LINCKS & ASSOCIATES, INC.
Engineers
Planners
5023 West Laurel Street
Tampa, Florida 33607
Tel (813) 289-0039
Fax (813) 287-0574
Lic. No. EB0004638

DATE	01/26/2012
DESIGNED	
DRAWN	DWM
CHECKED	DWD
JOB NO.	10087

The Villages of Trinity Lakes

UTILITY PLAN

REVISIONS

02/29/2012	Revised 8" W to 6", 6" Reuse W & 4" W to Park
08/30/2012	Revised Reuse Water Sizes, Location of Reuse W (Trinity Lakes Cul-De-Sac &
-	White Lilly Ct., Added ARV @ 30+0, FM ARV @ 19+85
10/09/2012	Rev. San MH Inv's from #24 to Pump Sta. to Resolve Storm Drain Conflict
12/11/2012	Removed 2" Water Line within Cool Springs Pkwy
04/19/2013	Revised Tract "U" to "T" to Match Plat

David W. Desilet
PE No. 24760

SHEET C19

DATE: 09/28/2000
TIME: 11:05am

XREF: NONE
SCALE: N/A
LAYOUT: 24X36 BLACKS
SPACE: PSPACE

PLOT SCALE: 1
PLOT CONFIG: LINCKS.PCP
PLOT STYLE: COLOR.CTB (AC42000)
FILE: LINCKS\PROTOTYPE\dwg\.DWG

E:\Work\10087_Trinity_Lakes\10087_ALTD_Alternative.dwg, Layout C19_Utility

Date: 04/19/13 Drawing: 10087_ALTD_Alternative.dwg

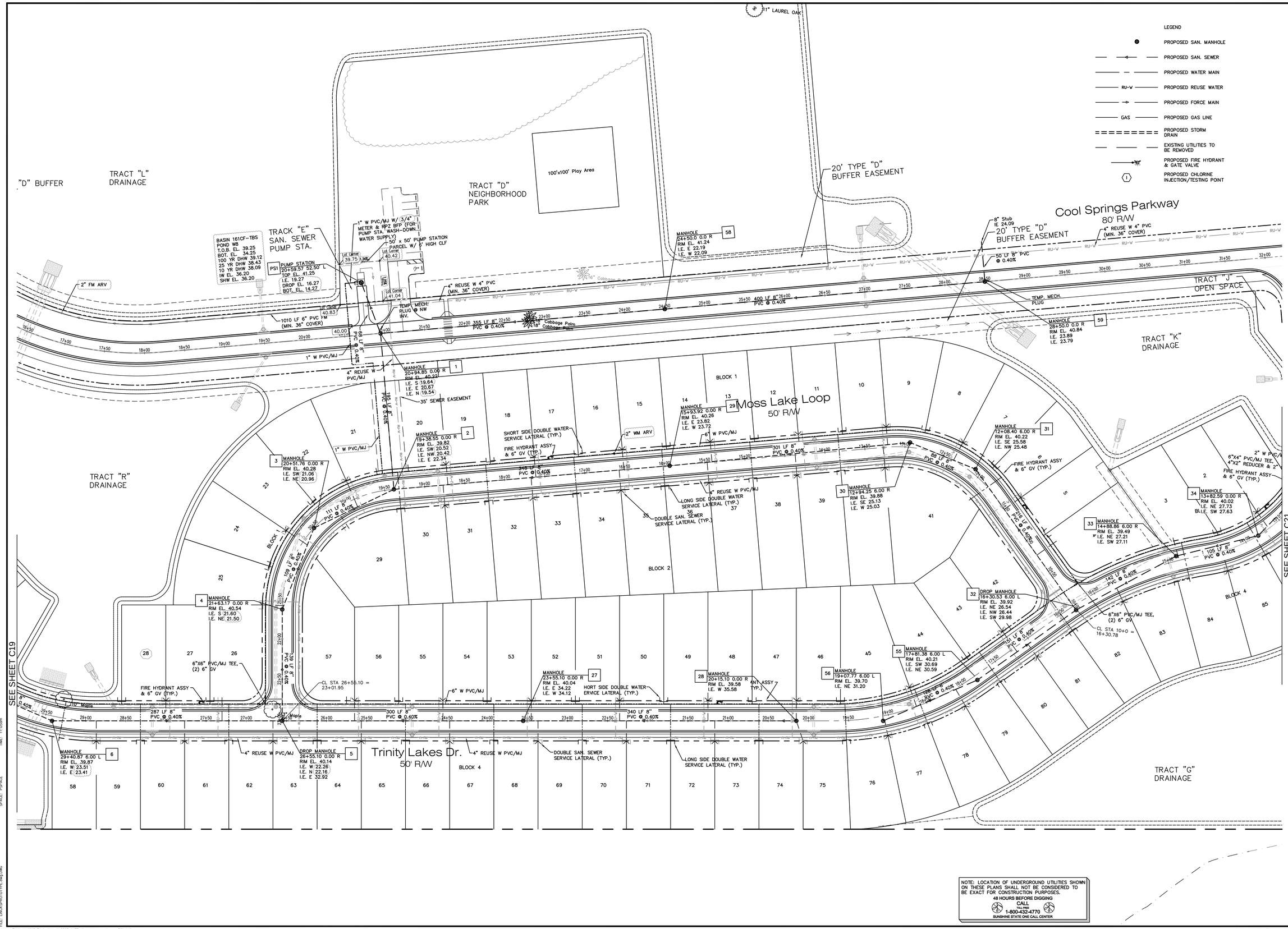

LINCKS & ASSOCIATES, INC.
Engineers
Planners
5023 West Laurel Street
Tampa, Florida 33607
Tel (813) 289-0039
Fax (813) 287-0674
Lic. No. EB0004638

DATE	01/26/2012
DESIGNED	
DRAWN	DWM
CHECKED	DWD
JOB NO.	10087

The Villages of Trinity Lakes

UTILITY PLAN

REVISIONS

02/29/2012	Revised 8" W to 6", 6" Reuse W to 4". Added 2" Reuse W. & 2" W to Park
08/09/2012	Revised Reuse Water Sizes, Added ARV @ 18+80 (Moss Lake Loop), TM ARV @ 16+85
-	Added 4" Reuse to Community Dr.
10/09/2012	Rev. Sta MH Inv's from #24 to Pump Sta. to Resolve Storm Drain Conflict
12/11/2012	Revised Water Line to Pump Station (1" W), Between Lots 20 & 21, Meter to 3/4"

David W. Desilet
PE No. 24760

SHEET C20

DATE: 08/08/2000
TIME: 11:05am

XREF: NONE
SCALE: 1/A
LAYOUT: 1-BLOCKS
SPACE: PSPACE

PLOT SCALE: 1
PLOT CONFIG: LINCKS.PCP
PLOT STYLE: COLOR.CTB (Plot As Displayed)
FILE: LINCSPROTOTYPE.dwg DWG

E:\Work\10087_Trinity_Lakes\10087_ALTD_Alternative.dwg, Layout C20_Utility

Date: 01/15/13 Drawing: 10087_ALTD_Alternative.dwg

LINCKS & ASSOCIATES, INC.
5023 West Laurel Street
Tampa, Florida 33607
Tel (813) 289-0039
Fax (813) 287-0574
Lic. No. EB0004638
Engineers
Planners

DATE	01/26/2012	
DESIGNED		
DRAWN	DWM	
CHECKED	DWD	
JOB NO.	10087	

The Villages of Trinity Lakes

UTILITY PLAN

REVISIONS

02/28/2012	Revised 8" W to 6", 6" Reuse W to 4", Added 2" Reuse W & 2" W to Park
08/30/2012	Revised Reuse Water Sizes, Added ARV, (8 Sh-Sts Hidden Springs Cul-De-Sac)
-	(2) GVS - 8" WM, (2) GVS - 4" Reuse @ Tract "G", Added 4" Reuse to Community Dr.
08/13/2012	Removed of Exist. Trees for Reuse WM Construction
08/29/2012	Added T/P Elev's To WM Connection & Min. Cover
10/15/2012	Rev. San. MH #'s 43 to 40 to Resolve Storm Drain Changes

David W. Desilet
PE No. 24760

SHEET C21

SCALE: 1" = 50'

DATE: 08/08/2000
TIME: 11:05am

XREF: NONE
SCALE: N/A
LAYOUT: ARCHITECH
SPACE: PSPACE

PLOT SCALE: 1
PLOT CONFIG: LINCKS.PCP
PLOT STYLE: LINCKS.CTB
FILE: LINCKSROTOTYPE.dwg

E:\Work\10087_Trinity_Lakes\10087_ALTD_Alternative.dwg, Layout C21_Utility

Date: 01/15/13 Drawing: 10087_ALTD_Alternative.dwg

LEGEND

- PROPOSED SAN. MANHOLE
- PROPOSED SAN. SEWER
- PROPOSED WATER MAIN
- RU-W PROPOSED REUSE WATER
- PROPOSED FORCE MAIN
- GAS PROPOSED GAS LINE
- PROPOSED STORM DRAIN
- EXISTING UTILITIES TO BE REMOVED
- PROPOSED FIRE HYDRANT & GATE VALVE
- PROPOSED CHLORINE INJECTION/TESTING POINT

NOTE: LOCATION OF UNDERGROUND UTILITIES SHOWN ON THESE PLANS SHALL NOT BE CONSIDERED TO BE EXACT FOR CONSTRUCTION PURPOSES.
48 HOURS BEFORE DIGGING CALL
TOLL FREE
1-800-432-4770
SUNSHINE STATE ONE CALL CENTER

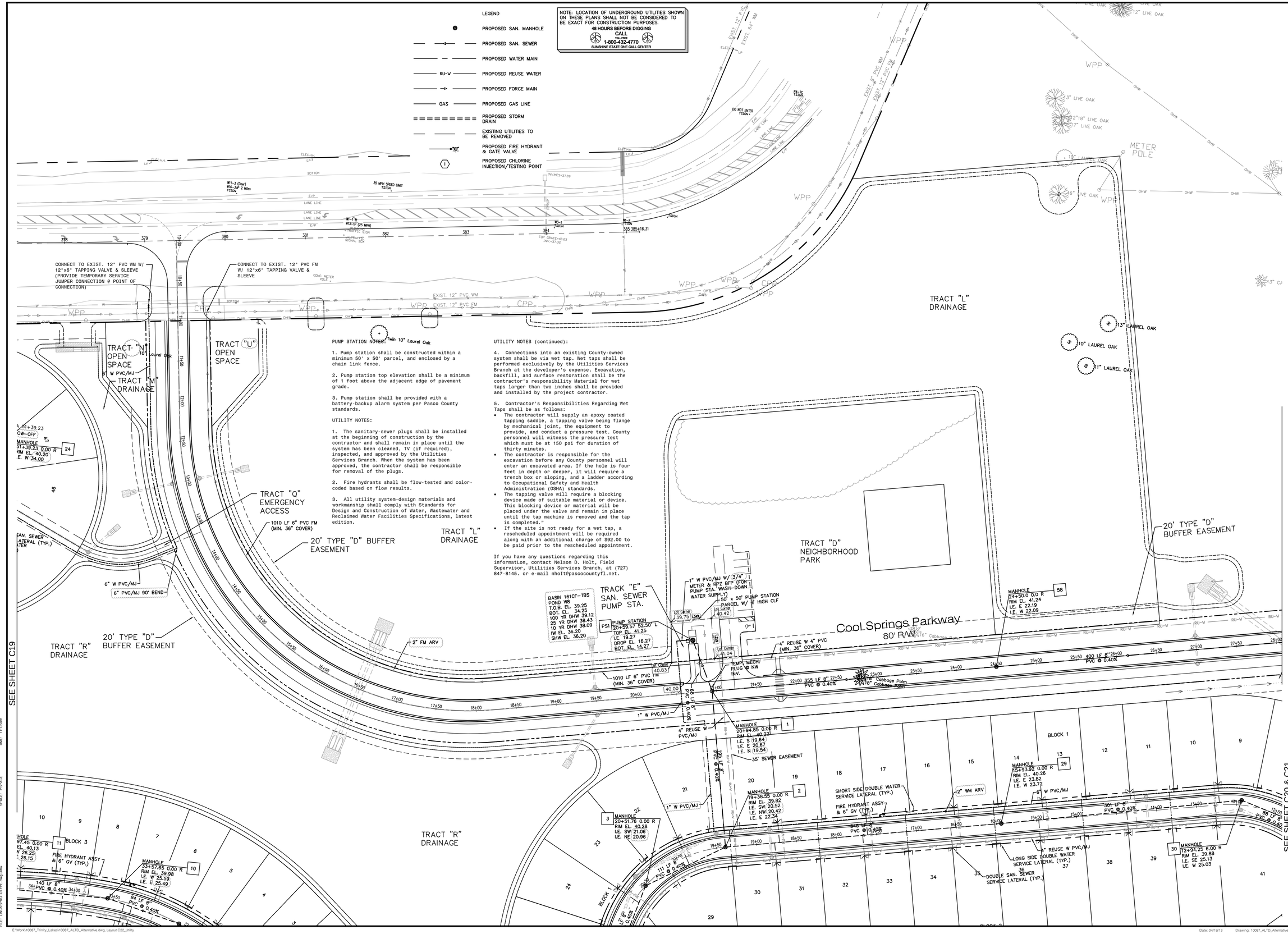

PUMP STATION NOTES:

1. Pump station shall be constructed within a minimum 50' x 50' parcel, and enclosed by a chain link fence.

2. Pump station top elevation shall be a minimum of 1 foot above the adjacent edge of pavement grade.

3. Pump station shall be provided with a battery-backup alarm system per Pasco County standards.

UTILITY NOTES:

1. The sanitary-sewer plugs shall be installed at the beginning of construction by the contractor and shall remain in place until the system has been cleaned, TV (if required), inspected, and approved by the Utilities Services Branch. When the system has been approved, the contractor shall be responsible for removal of the plugs.

2. Fire hydrants shall be flow-tested and color-coded based on flow results.

3. All utility system-design materials and workmanship shall comply with Standards for Design and Construction of Water, Wastewater and Reclaimed Water Facilities Specifications, latest edition.

UTILITY NOTES (continued):

4. Connections into an existing County-owned system shall be via wet tap. Wet taps shall be performed exclusively by the Utilities Services Branch at the developer's expense. Excavation, backfill, and surface restoration shall be the contractor's responsibility Material for wet taps larger than two inches shall be provided and installed by the project contractor.

5. Contractor's Responsibilities Regarding Wet Taps shall be as follows:

- The contractor will supply an epoxy coated tapping saddle, a tapping valve being flange by mechanical joint, the equipment to provide, and conduct a pressure test. County personnel will witness the pressure test which must be at 150 psi for duration of thirty minutes.
- The contractor is responsible for the excavation before any County personnel will enter an excavated area. If the hole is four feet in depth or deeper, it will require a trench box or sloping, and a ladder according to Occupational Safety and Health Administration (OSHA) standards.
- The tapping valve will require a blocking device made of suitable material or device. This blocking device or material will be placed under the valve and remain in place until the tap machine is removed and the tap is completed."
- If the site is not ready for a wet tap, a rescheduled appointment will be required along with an additional charge of $92.00 to be paid prior to the rescheduled appointment.

If you have any questions regarding this information, contact Nelson D. Holt, Field Supervisor, Utilities Services Branch, at (727) 847-8145. or e-mail nholt@pascocountyfl.net.

N

0' 50' 100'
SCALE: 1" = 50'

LINCKS & ASSOCIATES, INC.
5023 West Laurel Street
Tampa, Florida 33607
Tel (813) 289-0039
Fax (813) 287-0574
Lic. No. EB0004638
Engineers
Planners

DATE	01/26/2012
DESIGNED	
DRAWN	DWM
CHECKED	DWD
JOB NO.	10087

The Villages of Trinity Lakes

UTILITY PLAN

REVISIONS

02/28/2012	Revised 8" W to 6", 6" Reuse W to 4". Added 2" Reuse W, & 2" W to Park.
08/08/2012	Revised Reuse Water Sizes, Added ARV @ 15+40 (Moss Lake Loop), FM ARV @ 16+95
-	Added 4" Reuse to Community Dr.
10/08/2012	Rev. San Mh Inv's from 24" to Pump Sta., to Resolve Storm Drain Conflict
12/11/2012	Revised Water Line to Pump Station 1" W, Between Lots 20 & 21). Meter to 3/4"
04/19/2013	Revised Tract "D" to "L" to Match Plat

David W. Desilet
PE No. 24760

SHEET C22

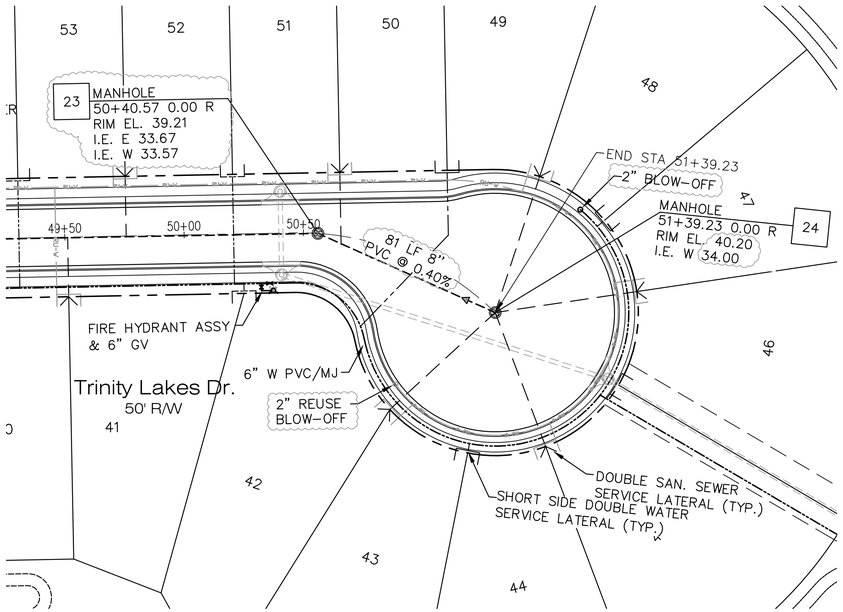

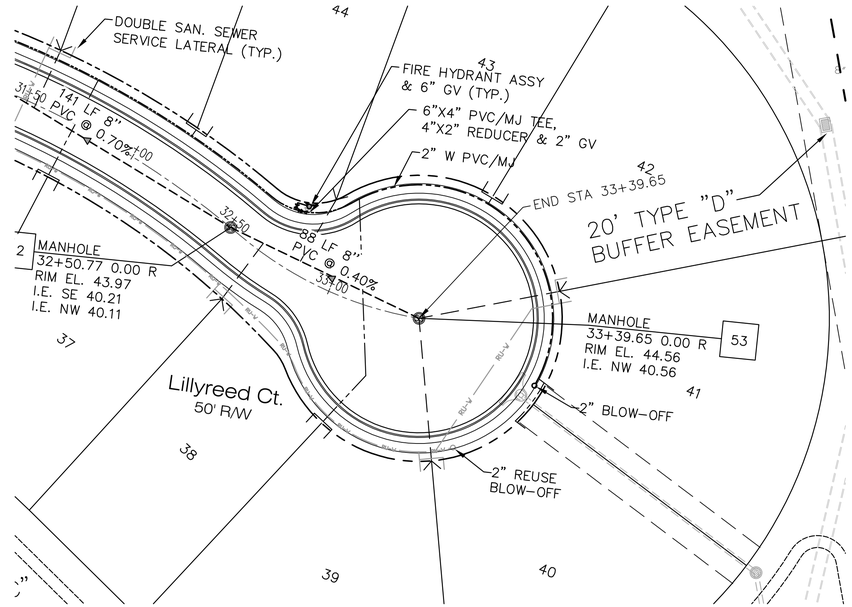

NOTE: LOCATION OF UNDERGROUND UTILITIES SHOWN ON THESE PLANS SHALL NOT BE CONSIDERED TO BE EXACT FOR CONSTRUCTION PURPOSES.
48 HOURS BEFORE DIGGING
CALL TOLL FREE 1-800-432-4770
SUNSHINE STATE ONE CALL CENTER

LEGEND

- PROPOSED SAN. MANHOLE
- PROPOSED SAN. SEWER
- PROPOSED WATER MAIN
- RU-V PROPOSED REUSE WATER
- PROPOSED FORCE MAIN
- GAS PROPOSED GAS LINE
- PROPOSED STORM DRAIN
- EXISTING UTILITIES TO BE REMOVED
- PROPOSED FIRE HYDRANT & GATE VALVE
- PROPOSED CHLORINE INJECTION/TESTING POINT

N

0' 30' 60'
SCALE: 1" = 30'

LINCKS & ASSOCIATES, INC.
5023 West Laurel Street
Tampa, Florida 33607
Tel (813) 289-0039
Fax (813) 287-0574
Lic. No. EB0004638
Engineers
Planners

DATE	01/26/2012
DESIGNED	
DRAWN	DWM
CHECKED	DWD
JOB NO.	10087

The Villages of Trinity Lakes

UTILITY PLAN

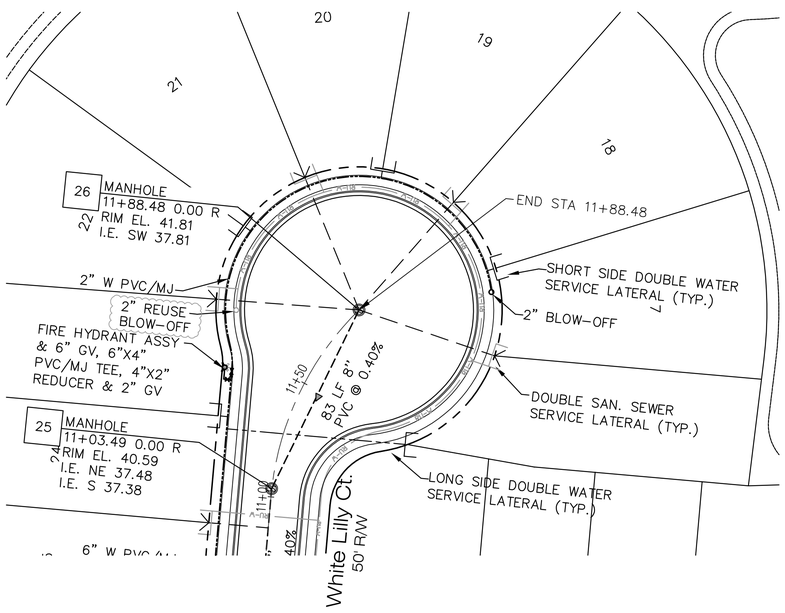

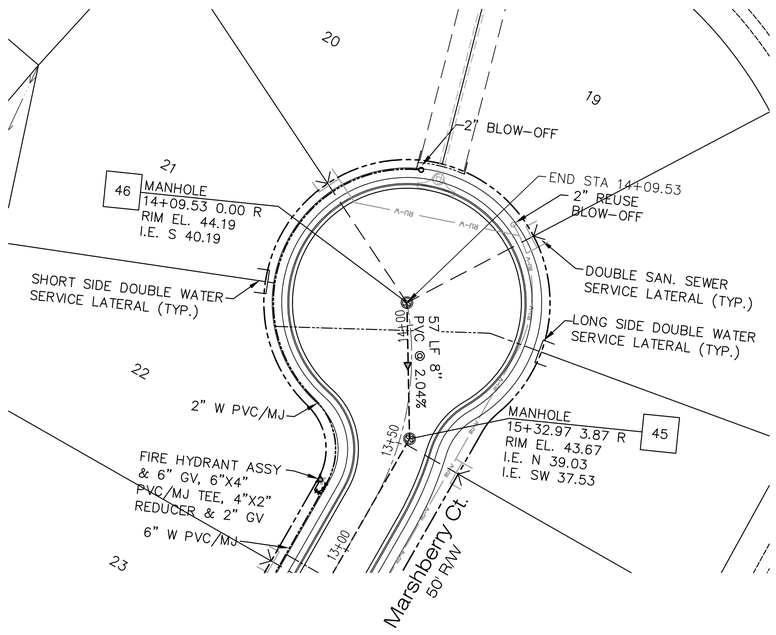

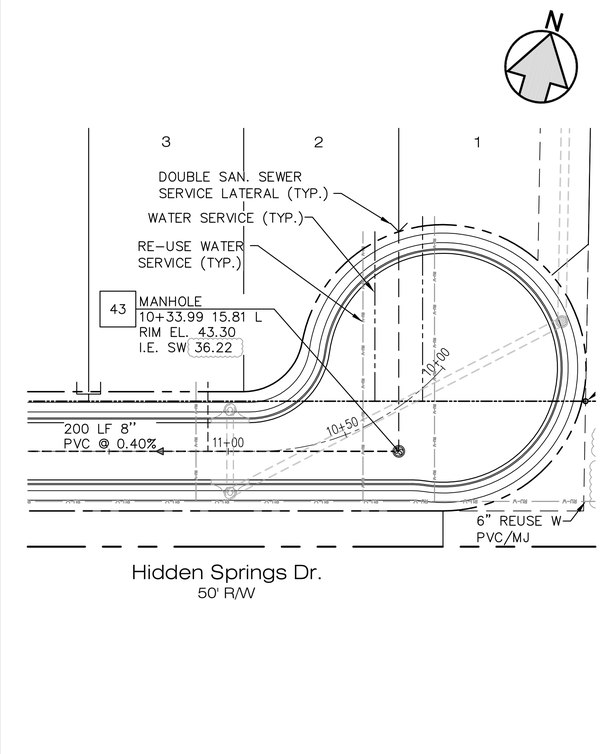

REVISIONS

08/30/2012	Revised Reuse Water Sizes, Location of Reuse W (Trinity Lakes Cul-De-Sac & White Lilly Ct.)
10/30/2012	Rev. San Mh Inv's from #24 to Pump Sta. to Resolve Storm Drain Conflict

David W. Desilet
PE No. 24760

SHEET
C23

PLOT SCALE: 1
PLOT CONFIG: LINCKS.PCP
PLOT STAMP: 10/30/2012 9:45:40 AM
FILE: LINCKSPROTOTYPE.dwg DWG

XREF: NONE
SCALE: N/A
USER: LINCKS
SPACE: PSPACE

DATE: 08/08/2000
TIME: 11:06am

E:\Work\10087_Trinity_Lakes\10087_ALTD_Alternative.dwg, Layout C23_Utility

Date: 01/15/13 Drawing: 10087_ALTD_Alternative.dwg

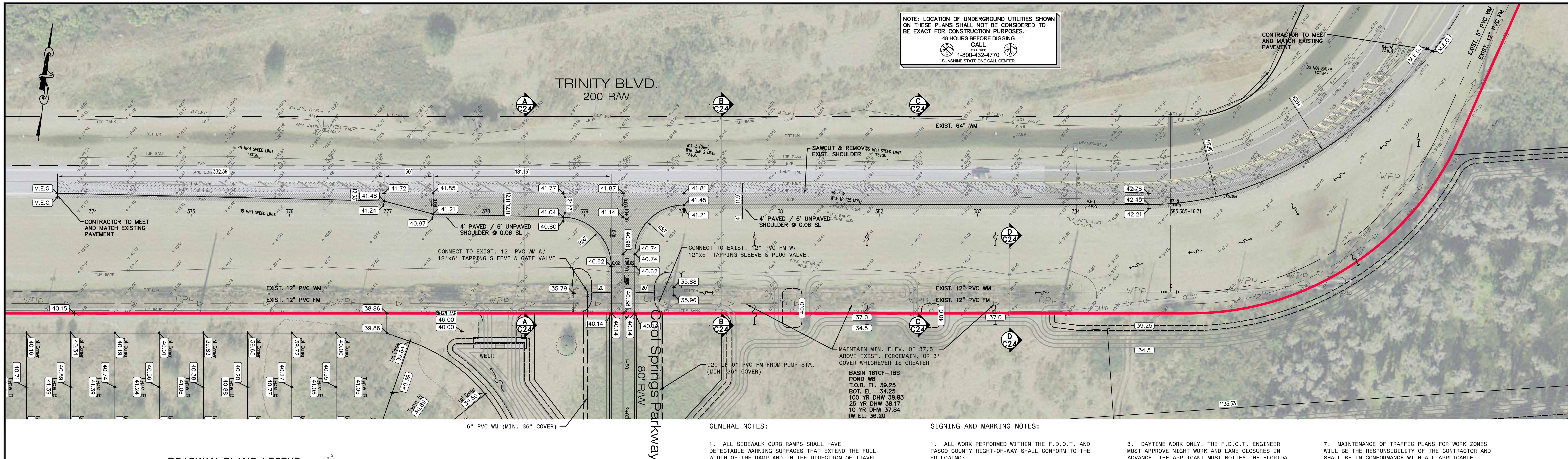

ROADWAY PLANS LEGEND

- PROPOSED DITCH BOTTOM INLET
- PROPOSED CURB INLET
- PROPOSED STORM MANHOLE
- PROPOSED STORM DRAIN
- PROPOSED SANITARY MANHOLE
- PROPOSED SANITARY SEWER
- PROPOSED WATER LINE
- PROPOSED BURIED TELEPHONE CONDUIT
- PROPOSED BURIED POWER CONDUIT
- PROPOSED OVERHEAD COMBINATION
- EXISTING ELEVATION
- PROPOSED ELEVATION
- OVERLAND FLOW
- SIGN
- EXISTING CHAINLINK FENCE
- EXISTING FORCE MAIN
- EXISTING WATER MAIN
- EXISTING GAS LINE
- EXISTING BURIED TELEPHONE
- EXISTING BURIED FIBEROPTIC
- EXISTING OVERHEAD COMBINATION
- EXISTING OVERHEAD POWER
- EXISTING PAVEMENT REMOVAL
- EXISTING COUNTY PAVEMENT REMOVAL AND REPLACEMENT
- EXISTING COUNTY ASPHALT MILLING AND RESURFACING
- PROPOSED COUNTY PAVEMENT
- PROPOSED COUNTY PAVED ROAD SHOULDER
- PROPOSED CONCRETE DRIVEWAY
- PROPOSED CONCRETE SIDEWALK

GENERAL NOTES:

1. ALL SIDEWALK CURB RAMPS SHALL HAVE DETECTABLE WARNING SURFACES THAT EXTEND THE FULL WIDTH OF THE RAMP AND IN THE DIRECTION OF TRAVEL 24 INCHES FROM THE BACK OF CURB (INDEX 304).

Pavement Section Notes:

1. For all roadway types, below the stabilized subgrade a minimum of two feet of select material, consisting of A-3 (SP) soil and/or A-2-4 with a maximum 15 percent passing number 200 sieve, shall be provided.

2. The engineer responsible for the project shall certify to the county engineering services director (thru PC Engineering Inspections) that the select material meets these standards prior to installation of the base. Certification shall strictly comply with the subgrade certification form available in "Engineering Services Department: A Procedural Guide for the Preparation of Assurances of Completion and Maintenance

SIGNING AND MARKING NOTES:

1. ALL WORK PERFORMED WITHIN THE F.D.O.T. AND PASCO COUNTY RIGHT-OF-WAY SHALL CONFORM TO THE FOLLOWING:

   A. FLORIDA DEPARTMENT OF TRANSPORTATION STANDARD SPECIFICATIONS FOR ROAD AND BRIDGE CONSTRUCTION (LATEST EDITION).

   B. FLORIDA DEPARTMENT OF TRANSPORTATION ROADWAY AND TRAFFIC DESIGN STANDARDS FOR DESIGN, CONSTRUCTION, MAINTENANCE AND UTILITY OPERATIONS ON THE STATE HIGHWAY SYSTEM (LATEST EDITION)

   C. FLORIDA DEPARTMENT OF TRANSPORTATION ROADWAY PLANS PREPARATION MANUAL VOLUME I, CHAPTER 2 AND/OR 25. (LATEST EDITION)

   D. FLORIDA DEPARTMENT OF TRANSPORTATION FLEXIBLE PAVEMENT DESIGN MANUAL FOR NEW CONSTRUCTION AND PAVEMENT REHABILITATION (LATEST EDITION).

2. ALL AREAS IN THE F.D.O.T. OR PASCO COUNTY RIGHT-OF-WAY DISTURBED DURING CONSTRUCTION SHALL BE RESTORED, COMPACTED, SODDED, AND WATERED IN CONFORMANCE WITH THE F.D.O.T. STANDARD SPECIFICATIONS FOR ROAD AND BRIDGE CONSTRUCTION, SECTION 575 AND 981, AND DESIGN STANDARDS INDEX 105.

3. DAYTIME WORK ONLY. THE F.D.O.T. ENGINEER MUST APPROVE NIGHT WORK AND LANE CLOSURES IN ADVANCE. THE APPLICANT MUST NOTIFY THE FLORIDA DEPARTMENT OF TRANSPORTATION LOCAL MAINTENANCE OFFICE 48 HOURS IN ADVANCE OF STARTING PROPOSED WORK.

4. ALL TRAFFIC STRIPES AND PAVEMENT MARKINGS ARE TO BE NON-SOLVENT BASED THERMOPLASTIC UNLESS OTHERWISE NOTED. REMOVAL OF EXISTING STRIPING SHALL BE DONE BY THE HYDROBLAST METHOD. PAVEMENT SURFACES DAMAGED AS A RESULT OF EXISTING STRIPING REMOVAL SHALL BE RESURFACED AS NEEDED.

5. ALL PROPOSED TRAFFIC SIGNS AND PAVEMENT MARKINGS SHALL BE IN CONFORMANCE WITH AND CONSTRUCTED TO THE F.D.O.T. DESIGN STANDARDS INDEX SERIES 11000, 17000, 17302, 9535, AND 11800 SERIES. THE PROPERTY OWNER MUST MAINTAIN THE DRIVEWAY TRAFFIC SIGNS AND MARKINGS.

6. THE F.D.O.T. REQUIRES DOCUMENTATION FOR SUCCESSFUL COMPLETION OF AN APPROVED WORK ZONE TRAFFIC CONTROL TRAINING COURSE FOR THE AGENCY, UTILITY, OR CONTRACTOR EMPLOYEE(S) INSTALLING AND/OR MAINTAINING THE APPROVED MAINTENANCE OF TRAFFIC PLAN. DOCUMENTATION IS TO BE FURNISHED TO THE DEPARTMENT AT THE PRE-CONSTRUCTION MEETING OR BEFORE OCCUPYING STATE RIGHT-OF-WAY.

7. MAINTENANCE OF TRAFFIC PLANS FOR WORK ZONES WILL BE THE RESPONSIBILITY OF THE CONTRACTOR AND SHALL BE IN CONFORMANCE WITH ALL APPLICABLE INDICES OF THE F.D.O.T. STANDARDS INDEX, 600 SERIES ACCORDING TO THE TYPE OF ROADWAY AND TYPE OF WORK BEING PERFORMED.

8. ALL TRAFFIC CONTROL SIGNING AND MARKING SHALL BE IN CONFORMANCE WITH THE MANUAL ON UNIFORM TRAFFIC CONTROL DEVICES AND FLORIDA DEPARTMENT OF TRANSPORTATION STANDARDS.

9. ALL ONSITE STOP BARS SHALL BE PROVIDED WITH A STOP SIGN (R1-1).

10. ALL ONSITE ROADS EXCEPT COOL SPRINGS PARKWAY ARE PRIVATELY OWNED AND MAINTAINED BY THE OWNER.

11. DRIVEWAYS SHALL BE CONSTRUCTED PER FDOT INDEX 515.

12. ROAD SIDE CLEAR ZONE SHALL BE FREE OF ANY OBSTRUCTIONS.

13. ALL DRIVEWAY CUTS SHALL BE INSTALLED TO LOCAL STREETS.

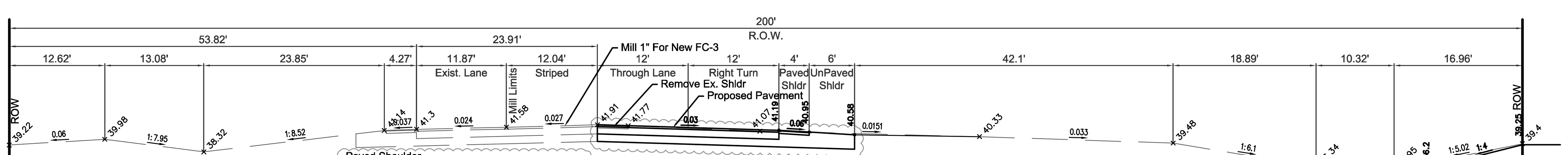

Paved Shoulder Structural Number	
3 / 4" SP9.5 Asphalt @ 0.44	= 0.33
4" Crushed Concrete Base @ 0.15	= 0.60
12" Sub Base LBR40 @ 0.08	= 0.96
Total Provided	= 1.89
Unpaved Shoulder Structural Number	
12" Sub Base LBR40 @ 0.08	= 0.96

SECTION A-A
TRINITY BLVD.
DESIGN SPEED 35 M.P.H.

Required SN = 4.00

Structural Number	
1" FC-3 Asphalt @ 0.44	= 0.44
2" SP12.5 Asphalt @ 0.44	= 0.88
11 - 1 / 2" Crushed Concrete Base @ 0.15	= 1.72
12" Sub Base LBR40 @ 0.08	= 0.96
Total Provided	= 4.00

Crushed concrete (LBR 150) shall be compacted to 100% T-180. The crushed concrete base material gradation shall conform to FDOT Standard Specification for Road and Bridge construction sections 204 and 901. The crushed concrete shall also conform to the crushed concrete specifications contained in the Hillsborough County Transportation Technical Manual

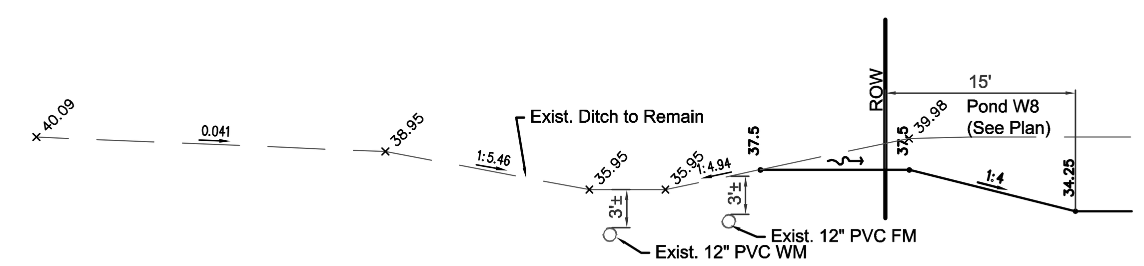

SECTION D-D
TRINITY BLVD.

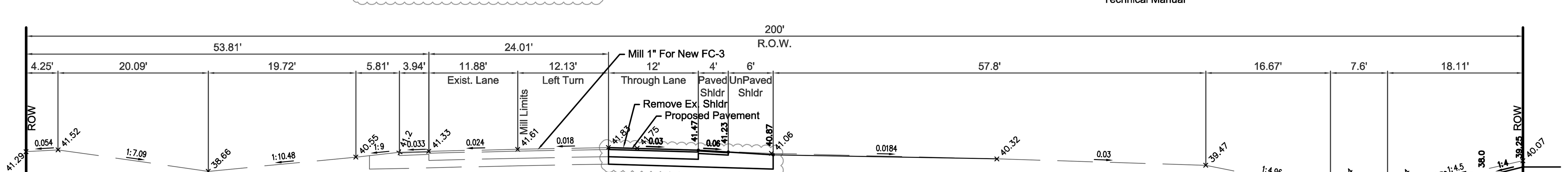

Paved Shoulder Structural Number	
3 / 4" SP9.5 Asphalt @ 0.44	= 0.33
4" Crushed Concrete Base @ 0.15	= 0.60
12" Sub Base LBR40 @ 0.08	= 0.96
Total Provided	= 1.89
Unpaved Shoulder Structural Number	
12" Sub Base LBR40 @ 0.08	= 0.96

SECTION B-B
TRINITY BLVD.
DESIGN SPEED 35 M.P.H.

Required SN = 4.00

Structural Number	
1" FC-3 Asphalt @ 0.44	= 0.44
2" SP12.5 Asphalt @ 0.44	= 0.88
11 - 1 / 2" Crushed Concrete Base @ 0.15	= 1.72
12" Sub Base LBR40 @ 0.08	= 0.96
Total Provided	= 4.00

Crushed concrete (LBR 150) shall be compacted to 100% T-180. The crushed concrete base material gradation shall conform to FDOT Standard Specification for Road and Bridge construction sections 204 and 901. The crushed concrete shall also conform to the crushed concrete specifications contained in the Hillsborough County Transportation Technical Manual

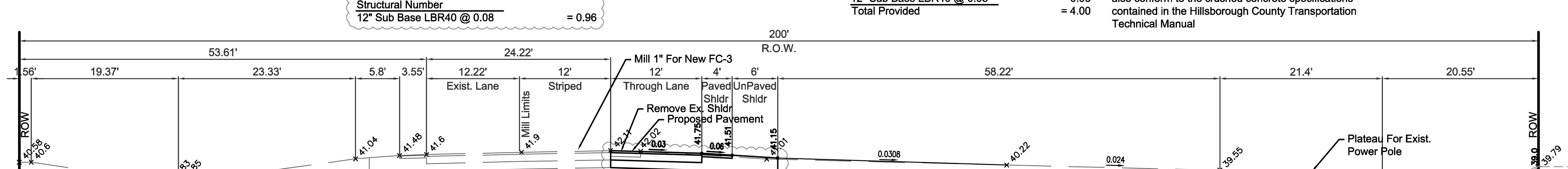

Paved Shoulder Structural Number	
3 / 4" SP9.5 Asphalt @ 0.44	= 0.33
4" Crushed Concrete Base @ 0.15	= 0.60
12" Sub Base LBR40 @ 0.08	= 0.96
Total Provided	= 1.89
Unpaved Shoulder Structural Number	
12" Sub Base LBR40 @ 0.08	= 0.96

SECTION C-C
TRINITY BLVD.
DESIGN SPEED 35 M.P.H.

Required SN = 4.00

Structural Number	
1" FC-3 Asphalt @ 0.44	= 0.44
2" SP12.5 Asphalt @ 0.44	= 0.88
11 - 1 / 2" Crushed Concrete Base @ 0.15	= 1.72
12" Sub Base LBR40 @ 0.08	= 0.96
Total Provided	= 4.00

Crushed concrete (LBR 150) shall be compacted to 100% T-180. The crushed concrete base material gradation shall conform to FDOT Standard Specification for Road and Bridge construction sections 204 and 901. The crushed concrete shall also conform to the crushed concrete specifications contained in the Hillsborough County Transportation Technical Manual

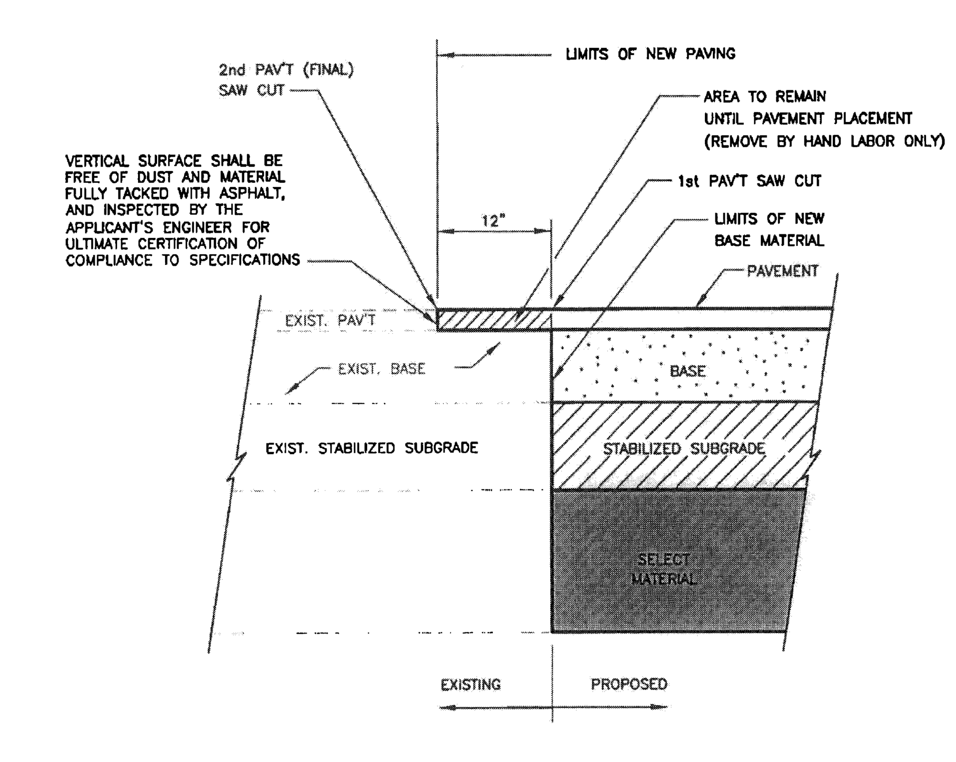

SECTIONAL VIEW
NTS

NOTES:

1. THE DEVELOPER'S ENGINEER SHALL INVESTIGATE THE EXISTING PAVEMENT LAYER TYPES AND DEPTHS BY RESEARCHING "RECORD/AS-BUILT DRAWINGS" AND/OR PERFORM GEOTECHNICAL BORINGS.
2. THE NEW PAVEMENT SHALL PROVIDE THE MINIMUM STRUCTURAL NUMBER AS FOLLOWS: TYPE 2 – 2.36, TYPE 1 – 3.50, COLLECTOR 3.70 ARTERIAL 4.00.

NOTE:
NO DEVIATIONS TO THIS DETAIL WILL BE PERMITTED UNLESS APPROVED BY THE COUNTY ENGINEER. ANY PROPOSED ALTERATIONS SHALL BE CLEARLY IDENTIFIED AND HIGHLIGHTED ON DETAIL.

PASCO COUNTY ENGINEERING SERVICES
DESIGN STANDARDS
PAVEMENT TIE-IN SAW CUT DETAIL
APPROVED BY | BCC APPROVAL | REVISED | DWG. NO.

SCALE: 1" = 50'

LINCKS & ASSOCIATES, INC.
5023 West Laurel Street
Tampa, Florida 33607
Tel (813) 289-0039
Fax (813) 287-0674
Lic. No. EB0004638
Engineers
Planners

DATE	01/26/2012
DESIGNED	
DRAWN	DWM
CHECKED	DWD
JOB NO.	10087

The Villages of Trinity Lakes
OFFSITE ROADWAY IMPROVEMENT PLAN

REVISIONS

Date	Revision
02/29/2012	Revised 8" W to 6"
07/04/2012	Corrected Sect. Sht. No's, Added Contours to Pond W8 @ Ditch, Rev. Trinity Blvd. Rd Sections
-	- Added Subbase to Paved Shldr, Extended to Unpaved Shldr., Added Pavement Tie In Detail
10/23/12	Added Section D-D for Drainage System Clarity
02/27/2013	Removed Detectable Warning Strips @ Sta 11+0 (Cool Springs)

David W. Desilet
PE No. 24760

SHEET C24

PLOT SCALE: 1
PLOT CONFIG: LINCKS.PCP
DIR: F:\Program Files\ACAD2000\
FILE: LINCKSPROTOTYPE.dwg.DWG
XREF: NONE
SCALE N/A
LAYERS: LINCKS
SPACE: PSPACE
DATE: 08/08/2000
TIME: 11:05am
E:\Work\10087_Trinity_Lakes\10087_ALTD_Alternative.dwg, Layout C24_Road_Imp
Date: 02/27/13 Drawing: 10087_ALTD_Alternative.dwg

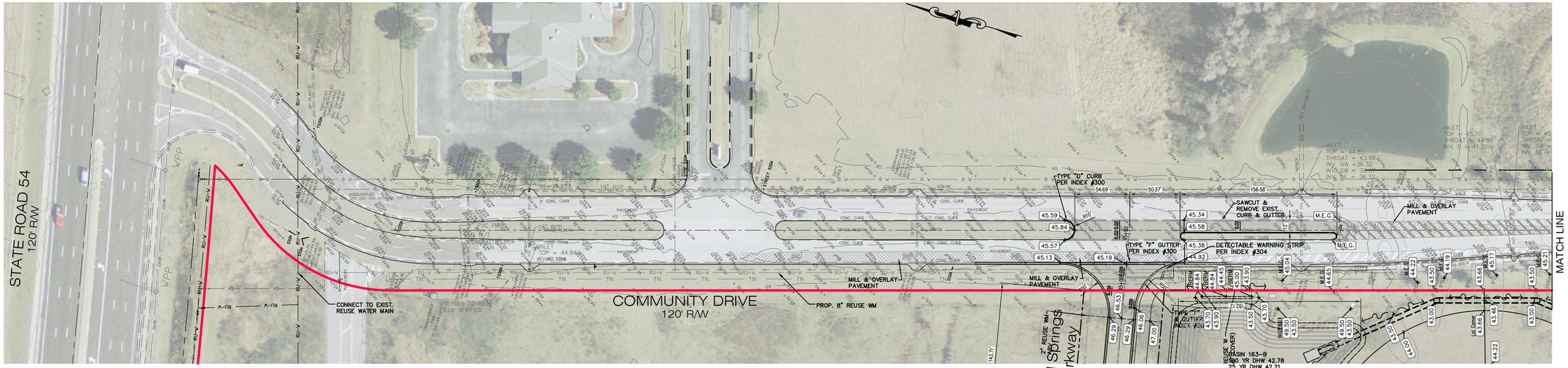

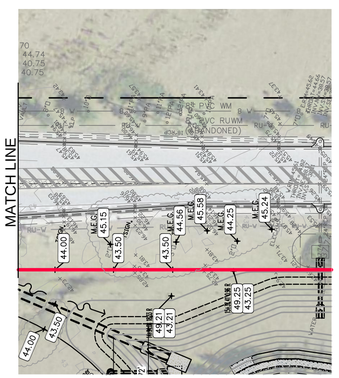

ROADWAY PLANS LEGEND

- PROPOSED DITCH BOTTOM INLET
- PROPOSED CURB INLET
- PROPOSED STORM MANHOLE
- PROPOSED STORM DRAIN
- PROPOSED SANITARY MANHOLE
- PROPOSED SANITARY SEWER
- PROPOSED WATER LINE
- PROPOSED BURIED TELEPHONE CONDUIT
- PROPOSED BURIED POWER CONDUIT
- PROPOSED OVERHEAD COMBINATION

- EXISTING ELEVATION
- PROPOSED ELEVATION (40.62 / 40.74)
- OVERLAND FLOW
- SIGN
- EXISTING CHAINLINK FENCE
- EXISTING FORCE MAIN
- EXISTING WATER MAIN
- EXISTING GAS LINE
- EXISTING BURIED TELEPHONE
- EXISTING BURIED FIBEROPTIC
- EXISTING OVERHEAD COMBINATION
- EXISTING OVERHEAD POWER

- EXISTING PAVEMENT REMOVAL
- EXISTING COUNTY PAVEMENT REMOVAL AND REPLACEMENT
- EXISTING COUNTY ASPHALT MILLING AND RESURFACING
- PROPOSED COUNTY PAVEMENT
- PROPOSED COUNTY PAVED ROAD SHOULDER
- PROPOSED CONCRETE DRIVEWAY
- PROPOSED CONCRETE SIDEWALK

NOTE: LOCATION OF UNDERGROUND UTILITIES SHOWN ON THESE PLANS SHALL NOT BE CONSIDERED TO BE EXACT FOR CONSTRUCTION PURPOSES.
48 HOURS BEFORE DIGGING
CALL
TOLL FREE
1-800-432-4770
SUNSHINE STATE ONE CALL CENTER

GENERAL NOTES:

1. ALL SIDEWALK CURB RAMPS SHALL HAVE DETECTABLE WARNING SURFACES THAT EXTEND THE FULL WIDTH OF THE RAMP AND IN THE DIRECTION OF TRAVEL 24 INCHES FROM THE BACK OF CURB (INDEX 304).

SIGNING AND MARKING NOTES:

1. ALL WORK PERFORMED WITHIN THE F.D.O.T. AND PASCO COUNTY RIGHT-OF-WAY SHALL CONFORM TO THE FOLLOWING:

A. FLORIDA DEPARTMENT OF TRANSPORTATION STANDARD SPECIFICATIONS FOR ROAD AND BRIDGE CONSTRUCTION (LATEST EDITION).

B. FLORIDA DEPARTMENT OF TRANSPORTATION ROADWAY AND TRAFFIC DESIGN STANDARDS FOR DESIGN, CONSTRUCTION, MAINTENANCE AND UTILITY OPERATIONS ON THE STATE HIGHWAY SYSTEM (LATEST EDITION)

C. FLORIDA DEPARTMENT OF TRANSPORTATION ROADWAY PLANS PREPARATION MANUAL VOLUME I, CHAPTER 2 AND/OR 25. (LATEST EDITION)

D. FLORIDA DEPARTMENT OF TRANSPORTATION FLEXIBLE PAVEMENT DESIGN MANUAL FOR NEW CONSTRUCTION AND PAVEMENT REHABILITATION (LATEST EDITION).

2. ALL AREAS IN THE F.D.O.T. OR PASCO COUNTY RIGHT-OF-WAY DISTURBED DURING CONSTRUCTION SHALL BE RESTORED, COMPACTED, SODDED, AND WATERED IN CONFORMANCE WITH THE F.D.O.T. STANDARD SPECIFICATIONS FOR ROAD AND BRIDGE CONSTRUCTION, SECTION 575 AND 981, AND DESIGN STANDARDS INDEX 105.

3. DAYTIME WORK ONLY. THE F.D.O.T. ENGINEER MUST APPROVE NIGHT WORK AND LANE CLOSURES IN ADVANCE. THE APPLICANT MUST NOTIFY THE FLORIDA DEPARTMENT OF TRANSPORTATION LOCAL MAINTENANCE OFFICE 48 HOURS IN ADVANCE OF STARTING PROPOSED WORK.

4. ALL TRAFFIC STRIPES AND PAVEMENT MARKINGS ARE TO BE NON-SOLVENT BASED THERMOPLASTIC UNLESS OTHERWISE NOTED. REMOVAL OF EXISTING STRIPING SHALL BE DONE BY THE HYDROBLAST METHOD. PAVEMENT SURFACES DAMAGED AS A RESULT OF EXISTING STRIPING REMOVAL SHALL BE RESURFACED AS NEEDED.

5. ALL PROPOSED TRAFFIC SIGNS AND PAVEMENT MARKINGS SHALL BE IN CONFORMANCE WITH AND CONSTRUCTED TO THE F.D.O.T. DESIGN STANDARDS INDEX SERIES 11000, 17000, 17302, 9535, AND 11800 SERIES. THE PROPERTY OWNER MUST MAINTAIN THE DRIVEWAY TRAFFIC SIGNS AND MARKINGS.

6. THE F.D.O.T. REQUIRES DOCUMENTATION FOR SUCCESSFUL COMPLETION OF AN APPROVED WORK ZONE TRAFFIC CONTROL TRAINING COURSE FOR THE AGENCY, UTILITY, OR CONTRACTOR EMPLOYEE(S) INSTALLING AND/OR MAINTAINING THE APPROVED MAINTENANCE OF TRAFFIC PLAN. DOCUMENTATION IS TO BE FURNISHED TO THE DEPARTMENT AT THE PRE-CONSTRUCTION MEETING OR BEFORE OCCUPYING STATE RIGHT-OF-WAY.

6. THE F.D.O.T. REQUIRES DOCUMENTATION FOR SUCCESSFUL COMPLETION OF AN APPROVED WORK ZONE TRAFFIC CONTROL TRAINING COURSE FOR THE AGENCY, UTILITY, OR CONTRACTOR EMPLOYEE(S) INSTALLING AND/OR MAINTAINING THE APPROVED MAINTENANCE OF TRAFFIC PLAN. DOCUMENTATION IS TO BE FURNISHED TO THE DEPARTMENT AT THE PRE-CONSTRUCTION MEETING OR BEFORE OCCUPYING STATE RIGHT-OF-WAY.

7. MAINTENANCE OF TRAFFIC PLANS FOR WORK ZONES WILL BE THE RESPONSIBILITY OF THE CONTRACTOR AND SHALL BE IN CONFORMANCE WITH ALL APPLICABLE INDICES OF THE F.D.O.T. STANDARDS INDEX, 600 SERIES ACCORDING TO THE TYPE OF ROADWAY AND TYPE OF WORK BEING PERFORMED.

8. ALL TRAFFIC CONTROL SIGNING AND MARKING SHALL BE IN CONFORMANCE WITH THE MANUAL ON UNIFORM TRAFFIC CONTROL DEVICES AND FLORIDA DEPARTMENT OF TRANSPORTATION STANDARDS.

9. ALL ONSITE STOP BARS SHALL BE PROVIDED WITH A STOP SIGN (R1-1).

10. ALL ONSITE ROADS EXCEPT COOL SPRINGS PARKWAY ARE PRIVATELY OWNED AND MAINTAINED BY THE OWNER.

11. DRIVEWAYS SHALL BE CONSTRUCTED PER FDOT INDEX 515.

Scale: 1"=20'

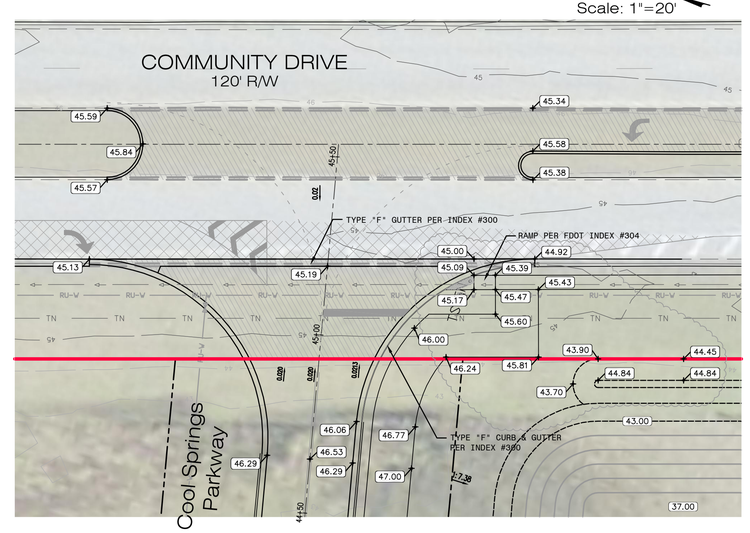

0' 50' 100'
SCALE: 1" = 50'

LINCKS & ASSOCIATES, INC.
5023 West Laurel Street
Tampa, Florida 33607
Tel (813) 289-0039
Fax (813) 287-0674
Lic. No. EB0004638
Engineers
Planners

DATE	01/26/2012	
DESIGNED		
DRAWN	DWM	
CHECKED	DWD	
JOB NO.	10087	

The Villages of Trinity Lakes

OFFSITE ROADWAY IMPROVEMENT PLAN

REVISIONS

02/29/2012	Revised 8" W to 6", 6" Reuse W to 4"

David W. Desilet
PE No. 24760

SHEET C25

XREF: NONE
SCALE: N/A
LAYOUT: 25-LINCKS
SPACE: PSPACE

DATE: 08/08/2000
TIME: 11:05am

PLOT SCALE: 1
PLOT CONFIG: LINCKS.PCP
PLOT STAMP: Friday, Nov 16, 2012 10:20:00 AM
FILE: LINCKS\PROTOTYPE-Prop.DWG

E:\Work\10087_Trinity_Lakes\10087_ALTD_Alternative.dwg, Layout C25_Road_Imp

Date: 11/27/12 Drawing: 10087_ALTD_Alternative.dwg

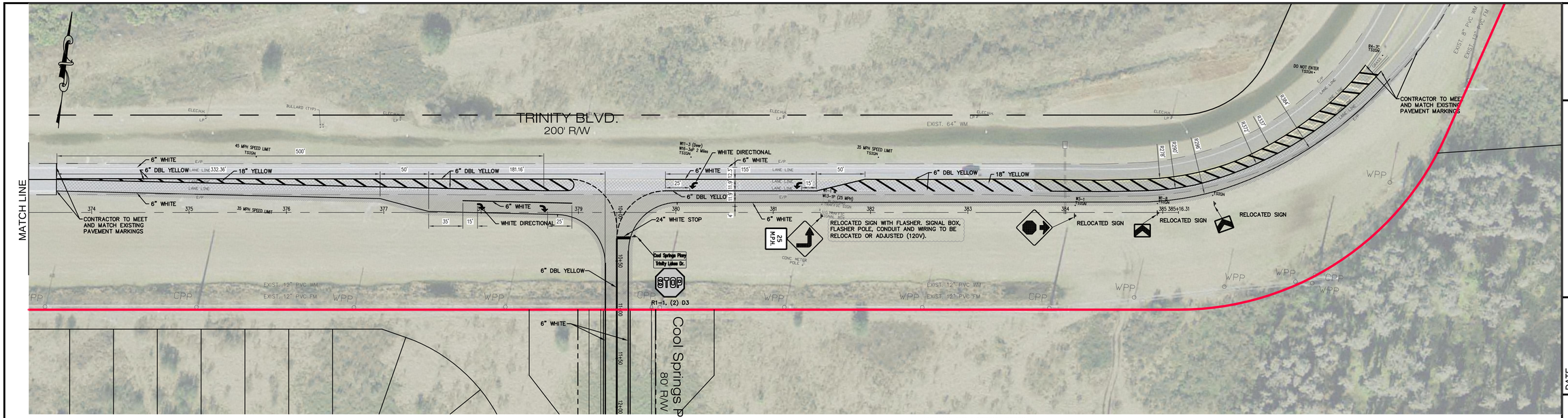

ROADWAY PLANS LEGEND

- PROPOSED DITCH BOTTOM INLET
- PROPOSED CURB INLET
- PROPOSED STORM MANHOLE
- PROPOSED STORM DRAIN
- PROPOSED SANITARY MANHOLE
- SS — PROPOSED SANITARY SEWER
- W — PROPOSED WATER LINE
- PROPOSED BURIED TELEPHONE CONDUIT
- PROPOSED BURIED POWER CONDUIT
- PROPOSED OVERHEAD COMBINATION
- + 5.9.4 — EXISTING ELEVATION
- 40.62 / 40.74 — PROPOSED ELEVATION
- OVERLAND FLOW
- SIGN
- X — EXISTING CHAINLINK FENCE
- EXISTING FORCE MAIN
- EXISTING WATER MAIN
- EXISTING GAS LINE
- EXISTING BURIED TELEPHONE
- EXISTING BURIED FIBEROPTIC
- EXISTING OVERHEAD COMBINATION
- EXISTING OVERHEAD POWER
- EXISTING PAVEMENT REMOVAL
- EXISTING COUNTY PAVEMENT REMOVAL AND REPLACEMENT
- EXISTING COUNTY ASPHALT MILLING AND RESURFACING
- PROPOSED COUNTY PAVEMENT
- PROPOSED COUNTY PAVED ROAD SHOULDER
- PROPOSED CONCRETE DRIVEWAY
- PROPOSED CONCRETE SIDEWALK

NOTE: LOCATION OF UNDERGROUND UTILITIES SHOWN ON THESE PLANS SHALL NOT BE CONSIDERED TO BE EXACT FOR CONSTRUCTION PURPOSES.
48 HOURS BEFORE DIGGING
CALL
TOLL FREE
1-800-432-4770
SUNSHINE STATE ONE CALL CENTER

SIGNING AND MARKING NOTES:

1. ALL WORK PERFORMED WITHIN THE F.D.O.T. AND PASCO COUNTY RIGHT-OF-WAY SHALL CONFORM TO THE FOLLOWING:

   A. FLORIDA DEPARTMENT OF TRANSPORTATION STANDARD SPECIFICATIONS FOR ROAD AND BRIDGE CONSTRUCTION (LATEST EDITION).

   B. FLORIDA DEPARTMENT OF TRANSPORTATION ROADWAY AND TRAFFIC DESIGN STANDARDS FOR DESIGN, CONSTRUCTION, MAINTENANCE AND UTILITY OPERATIONS ON THE STATE HIGHWAY SYSTEM (LATEST EDITION)

   C. FLORIDA DEPARTMENT OF TRANSPORTATION ROADWAY PLANS PREPARATION MANUAL VOLUME I, CHAPTER 2 AND/OR 25. (LATEST EDITION)

   D. FLORIDA DEPARTMENT OF TRANSPORTATION FLEXIBLE PAVEMENT DESIGN MANUAL FOR NEW CONSTRUCTION AND PAVEMENT REHABILITATION (LATEST EDITION).

2. ALL AREAS IN THE F.D.O.T. OR PASCO COUNTY RIGHT-OF-WAY DISTURBED DURING CONSTRUCTION SHALL BE RESTORED, COMPACTED, SODDED, AND WATERED IN CONFORMANCE WITH THE F.D.O.T. STANDARD SPECIFICATIONS FOR ROAD AND BRIDGE CONSTRUCTION, SECTION 575 AND 981, AND DESIGN STANDARDS INDEX 105.

3. DAYTIME WORK ONLY. THE F.D.O.T. ENGINEER MUST APPROVE NIGHT WORK AND LANE CLOSURES IN ADVANCE. THE APPLICANT MUST NOTIFY THE FLORIDA DEPARTMENT OF TRANSPORTATION LOCAL MAINTENANCE OFFICE 48 HOURS IN ADVANCE OF STARTING PROPOSED WORK.

4. ALL TRAFFIC STRIPES AND PAVEMENT MARKINGS ARE TO BE NON-SOLVENT BASED THERMOPLASTIC UNLESS OTHERWISE NOTED. REMOVAL OF EXISTING STRIPING SHALL BE DONE BY THE HYDROBLAST METHOD. PAVEMENT SURFACES DAMAGED AS A RESULT OF EXISTING STRIPING REMOVAL SHALL BE RESURFACED AS NEEDED.

5. ALL PROPOSED TRAFFIC SIGNS AND PAVEMENT MARKINGS SHALL BE IN CONFORMANCE WITH AND CONSTRUCTED TO THE F.D.O.T. DESIGN STANDARDS INDEX SERIES 11000, 17000, 17302, 9535, AND 11800 SERIES. THE PROPERTY OWNER MUST MAINTAIN THE DRIVEWAY TRAFFIC SIGNS AND MARKINGS.

6. THE F.D.O.T. REQUIRES DOCUMENTATION FOR SUCCESSFUL COMPLETION OF AN APPROVED WORK ZONE TRAFFIC CONTROL TRAINING COURSE FOR THE AGENCY, UTILITY, OR CONTRACTOR EMPLOYEE(S) INSTALLING AND/OR MAINTAINING THE APPROVED MAINTENANCE OF TRAFFIC PLAN. DOCUMENTATION IS TO BE FURNISHED TO THE DEPARTMENT AT THE PRE-CONSTRUCTION MEETING OR BEFORE OCCUPYING STATE RIGHT-OF-WAY.

6. THE F.D.O.T. REQUIRES DOCUMENTATION FOR SUCCESSFUL COMPLETION OF AN APPROVED WORK ZONE TRAFFIC CONTROL TRAINING COURSE FOR THE AGENCY, UTILITY, OR CONTRACTOR EMPLOYEE(S) INSTALLING AND/OR MAINTAINING THE APPROVED MAINTENANCE OF TRAFFIC PLAN. DOCUMENTATION IS TO BE FURNISHED TO THE DEPARTMENT AT THE PRE-CONSTRUCTION MEETING OR BEFORE OCCUPYING STATE RIGHT-OF-WAY.

7. MAINTENANCE OF TRAFFIC PLANS FOR WORK ZONES WILL BE THE RESPONSIBILITY OF THE CONTRACTOR AND SHALL BE IN CONFORMANCE WITH ALL APPLICABLE INDICES OF THE F.D.O.T. STANDARDS INDEX, 600 SERIES ACCORDING TO THE TYPE OF ROADWAY AND TYPE OF WORK BEING PERFORMED.

8. ALL TRAFFIC CONTROL SIGNING AND MARKING SHALL BE IN CONFORMANCE WITH THE MANUAL ON UNIFORM TRAFFIC CONTROL DEVICES AND FLORIDA DEPARTMENT OF TRANSPORTATION STANDARDS.

9. ALL ONSITE STOP BARS SHALL BE PROVIDED WITH A STOP SIGN (R1-1).

10. ALL ONSITE ROADS ARE PRIVATELY OWNED AND MAINTAINED BY THE OWNER.

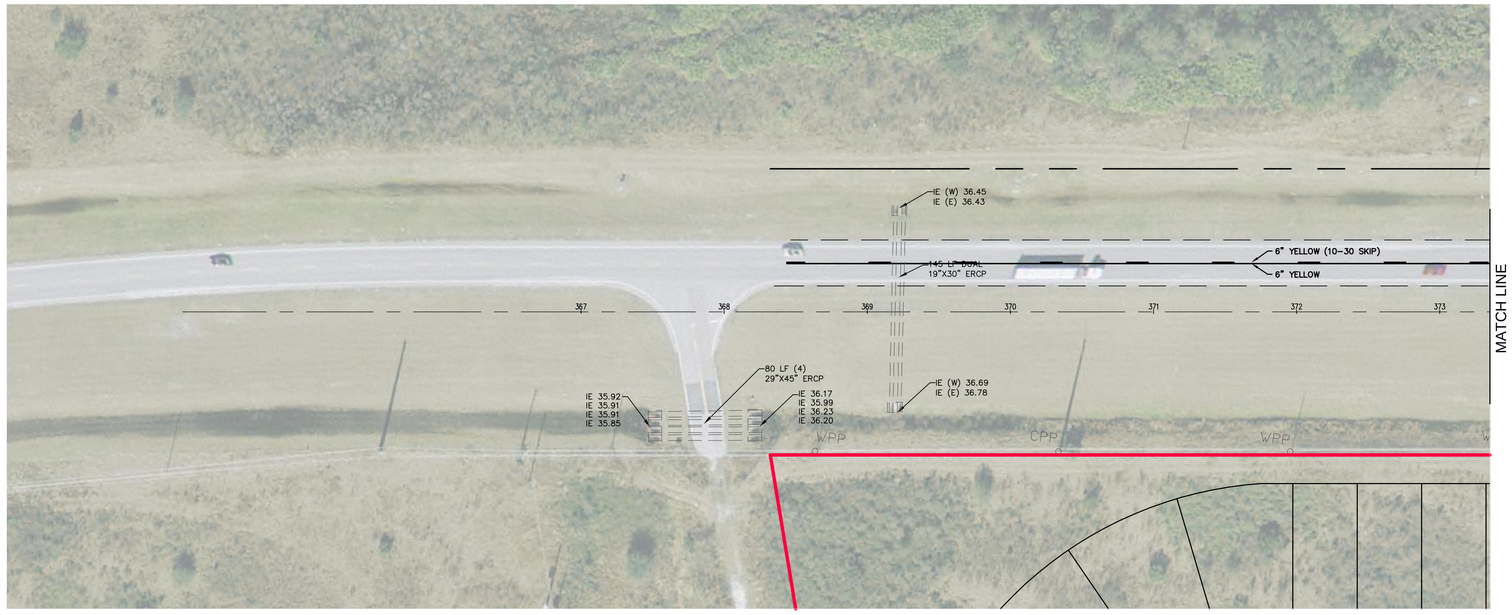

N
0' 40' 80'
SCALE: 1" = 40'

LINCKS & ASSOCIATES, INC.
Engineers
Planners
5023 West Laurel Street
Tampa, Florida 33607
Tel (813) 289-0039
Fax (813) 287-0674
Lic. No. EB0004638

DATE	01/26/2012
DESIGNED	
DRAWN	DWM
CHECKED	DWD
JOB NO.	10087

The Villages of Trinity Lakes

Signing & Striping Plan

REVISIONS

12/28/2012	Corrected C3, Striping West, Added Flasher Relocation Note
02/27/2013	Removed Detectable Warning Strips @ Sta 11+0 (Cool Springs)

David W. Desilet
PE No. 24760

SHEET
C26

XREF: NONE
SCALE: N/A
PLOT STYLE: NONE
SPACE: PSPACE

DATE: 08/08/2000
TIME: 11:05am

PLOT SCALE: 1
PLOT CONFIG: LINCKS.PCP
PLOT STYLE: LINCKS.CTB
FILE: LINCKS\PROTOTYPE.dwg

SIGNING AND MARKING NOTES:

1. ALL WORK PERFORMED WITHIN THE F.D.O.T. AND PASCO COUNTY RIGHT-OF-WAY SHALL CONFORM TO THE FOLLOWING:

A. FLORIDA DEPARTMENT OF TRANSPORTATION STANDARD SPECIFICATIONS FOR ROAD AND BRIDGE CONSTRUCTION (LATEST EDITION).

B. FLORIDA DEPARTMENT OF TRANSPORTATION ROADWAY AND TRAFFIC DESIGN STANDARDS FOR DESIGN, CONSTRUCTION, MAINTENANCE AND UTILITY OPERATIONS ON THE STATE HIGHWAY SYSTEM (LATEST EDITION)

C. FLORIDA DEPARTMENT OF TRANSPORTATION ROADWAY PLANS PREPARATION MANUAL VOLUME I, CHAPTER 2 AND/OR 25. (LATEST EDITION)

D. FLORIDA DEPARTMENT OF TRANSPORTATION FLEXIBLE PAVEMENT DESIGN MANUAL FOR NEW CONSTRUCTION AND PAVEMENT REHABILITATION (LATEST EDITION).

2. ALL AREAS IN THE F.D.O.T. OR PASCO COUNTY RIGHT-OF-WAY DISTURBED DURING CONSTRUCTION SHALL BE RESTORED, COMPACTED, SODDED, AND WATERED IN CONFORMANCE WITH THE F.D.O.T. STANDARD SPECIFICATIONS FOR ROAD AND BRIDGE CONSTRUCTION, SECTION 575 AND 981, AND DESIGN STANDARDS INDEX 105.

3. DAYTIME WORK ONLY. THE F.D.O.T. ENGINEER MUST APPROVE NIGHT WORK AND LANE CLOSURES IN ADVANCE. THE APPLICANT MUST NOTIFY THE FLORIDA DEPARTMENT OF TRANSPORTATION LOCAL MAINTENANCE OFFICE 48 HOURS IN ADVANCE OF STARTING PROPOSED WORK.

4. ALL TRAFFIC STRIPES AND PAVEMENT MARKINGS ARE TO BE NON-SOLVENT BASED THERMOPLASTIC UNLESS OTHERWISE NOTED. REMOVAL OF EXISTING STRIPING SHALL BE DONE BY THE HYDROBLAST METHOD. PAVEMENT SURFACES DAMAGED AS A RESULT OF EXISTING STRIPING REMOVAL SHALL BE RESURFACED AS NEEDED.

5. ALL PROPOSED TRAFFIC SIGNS AND PAVEMENT MARKINGS SHALL BE IN CONFORMANCE WITH AND CONSTRUCTED TO THE F.D.O.T. DESIGN STANDARDS INDEX SERIES 11000, 17000, 17302, 9535, AND 11800 SERIES. THE PROPERTY OWNER MUST MAINTAIN THE DRIVEWAY TRAFFIC SIGNS AND MARKINGS.

6. THE F.D.O.T. REQUIRES DOCUMENTATION FOR SUCCESSFUL COMPLETION OF AN APPROVED WORK ZONE TRAFFIC CONTROL TRAINING COURSE FOR THE AGENCY, UTILITY, OR CONTRACTOR EMPLOYEE(S) INSTALLING AND/OR MAINTAINING THE APPROVED MAINTENANCE OF TRAFFIC PLAN. DOCUMENTATION IS TO BE FURNISHED TO THE DEPARTMENT AT THE PRE-CONSTRUCTION MEETING OR BEFORE OCCUPYING STATE RIGHT-OF-WAY.

6. THE F.D.O.T. REQUIRES DOCUMENTATION FOR SUCCESSFUL COMPLETION OF AN APPROVED WORK ZONE TRAFFIC CONTROL TRAINING COURSE FOR THE AGENCY, UTILITY, OR CONTRACTOR EMPLOYEE(S) INSTALLING AND/OR MAINTAINING THE APPROVED MAINTENANCE OF TRAFFIC PLAN. DOCUMENTATION IS TO BE FURNISHED TO THE DEPARTMENT AT THE PRE-CONSTRUCTION MEETING OR BEFORE OCCUPYING STATE RIGHT-OF-WAY.

7. MAINTENANCE OF TRAFFIC PLANS FOR WORK ZONES WILL BE THE RESPONSIBILITY OF THE CONTRACTOR AND SHALL BE IN CONFORMANCE WITH ALL APPLICABLE INDICES OF THE F.D.O.T. STANDARDS INDEX, 600 SERIES ACCORDING TO THE TYPE OF ROADWAY AND TYPE OF WORK BEING PERFORMED.

8. ALL TRAFFIC CONTROL SIGNING AND MARKING SHALL BE IN CONFORMANCE WITH THE MANUAL ON UNIFORM TRAFFIC CONTROL DEVICES AND FLORIDA DEPARTMENT OF TRANSPORTATION STANDARDS.

9. ALL ONSITE STOP BARS SHALL BE PROVIDED WITH A STOP SIGN (R1-1).

10. ALL ONSITE ROADS ARE PRIVATELY OWNED AND MAINTAINED BY THE OWNER.

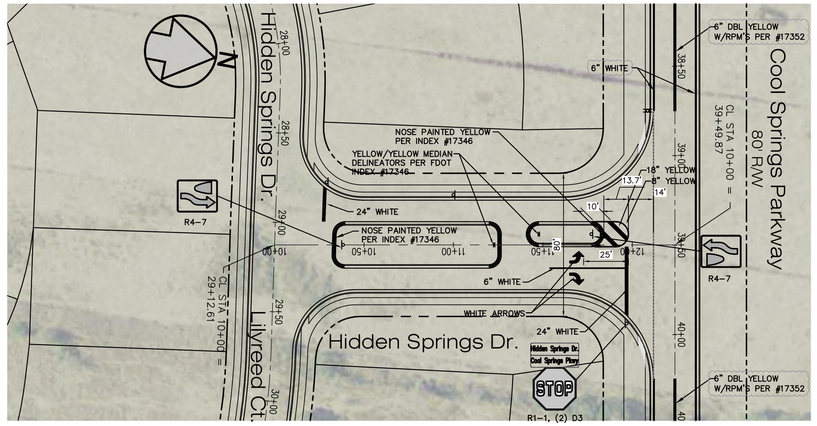

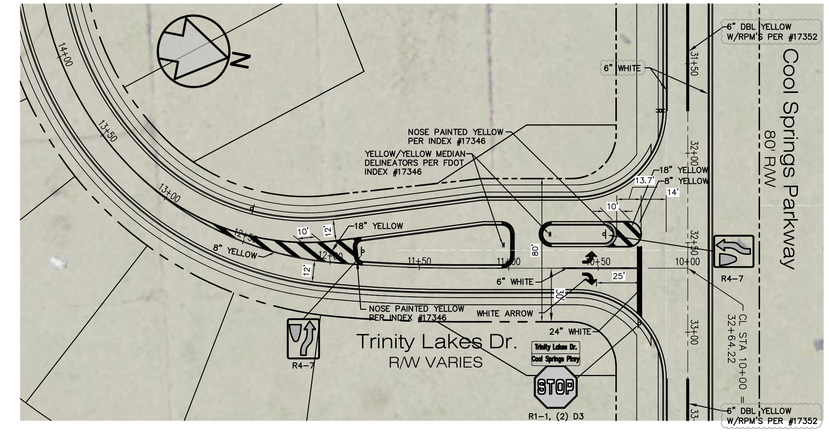

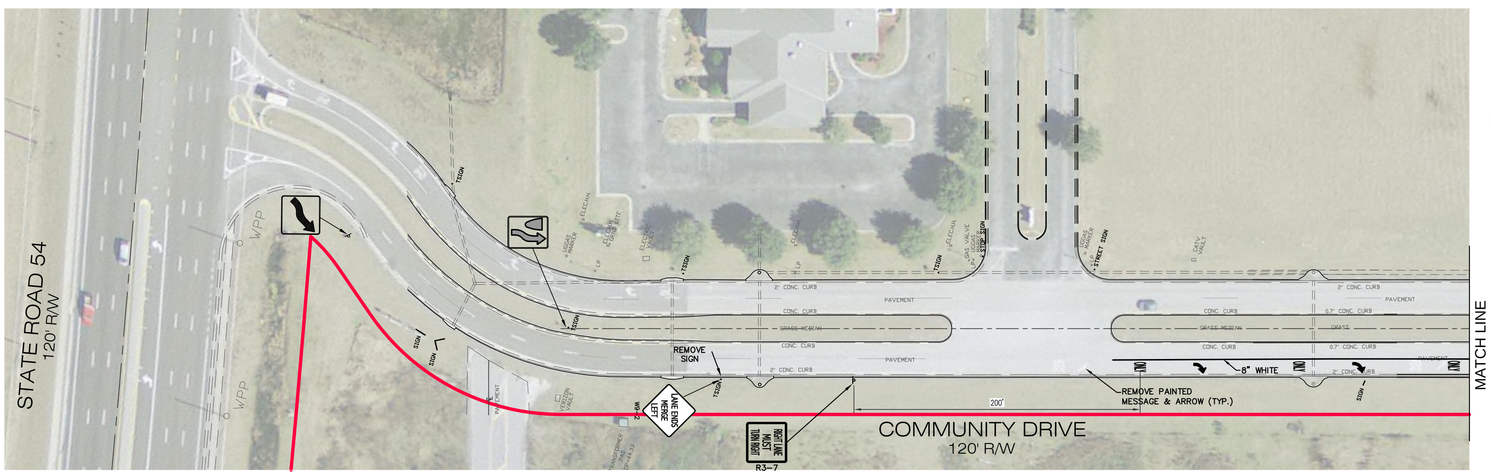

ROADWAY PLANS LEGEND

- PROPOSED DITCH BOTTOM INLET
- PROPOSED CURB INLET
- PROPOSED STORM MANHOLE
- PROPOSED STORM DRAIN
- PROPOSED SANITARY MANHOLE
- SS — PROPOSED SANITARY SEWER
- W — PROPOSED WATER LINE
- BT — PROPOSED BURIED TELEPHONE CONDUIT
- BP — PROPOSED BURIED POWER CONDUIT
- OHC — PROPOSED OVERHEAD COMBINATION
- + 59.4 — EXISTING ELEVATION
- 40.62 / 40.74 — PROPOSED ELEVATION
- OVERLAND FLOW
- SIGN
- x — x — EXISTING CHAINLINK FENCE
- FM — EXISTING FORCE MAIN
- W — EXISTING WATER MAIN
- GAS — EXISTING GAS LINE
- BT — EXISTING BURIED TELEPHONE
- BFO — EXISTING BURIED FIBEROPTIC
- OHC — EXISTING OVERHEAD COMBINATION
- OHP — EXISTING OVERHEAD POWER
- EXISTING PAVEMENT REMOVAL
- EXISTING COUNTY PAVEMENT REMOVAL AND REPLACEMENT
- EXISTING COUNTY ASPHALT MILLING AND RESURFACING
- PROPOSED COUNTY PAVEMENT
- PROPOSED COUNTY PAVED ROAD SHOULDER
- PROPOSED CONCRETE DRIVEWAY
- PROPOSED CONCRETE SIDEWALK

NOTE: LOCATION OF UNDERGROUND UTILITIES SHOWN ON THESE PLANS SHALL NOT BE CONSIDERED TO BE EXACT FOR CONSTRUCTION PURPOSES.
48 HOURS BEFORE DIGGING
CALL
TOLL FREE
1-800-432-4770
SUNSHINE STATE ONE CALL CENTER

PASCO COUNTY ONSITE SIGNING AND MARKING NOTES:

PASCO COUNTY
TRAFFIC CONTROL DEVICES NOTES FOR PRIVATE STREETS
Revised July 27, 2006

a. All traffic control devices shall be installed in conformance with the Manual on Uniform Traffic Control Devices and the Florida Department of Transportation standards.

b. All street name signs on private roads shall be D3 street name signs with the colors Reversed, white background with green letters and border. At intersections with County, State or City maintained roads; the county or state maintained road shall be green background with white letters and border. The City maintained road shall be green background with white letters and border unless the city has adopted other colors.

c. Any traffic control device for a private roadway placed in a county or state Right-of-Way shall be installed on the appropriate breakaway post assembly.

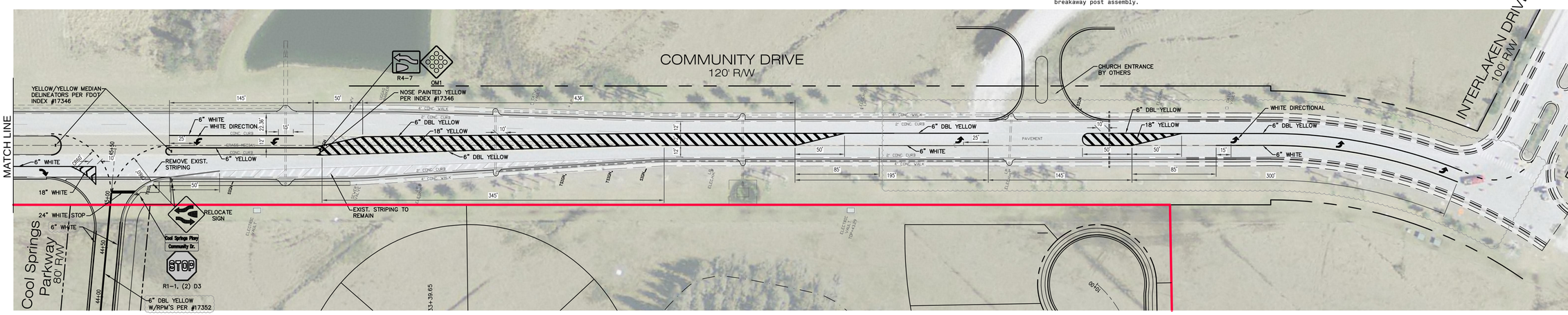

LINCKS & ASSOCIATES, INC.
5023 West Laurel Street
Tampa, Florida 33607
Tel (813) 289-0039
Fax (813) 287-0674
Lic. No. EB0004638
Engineers
Planners

DATE	01/26/2012	
DESIGNED		
DRAWN	DWM	
CHECKED	DWD	
JOB NO.	10087	

The Villages of Trinity Lakes

Signing & Striping Plan

REVISIONS

07/18/2012	Added Striping For Left Turn on Interlaken.
12/28/2012	Added R4-7/QM1 To Community Dr. Median
01/29/2013	Revised Yellow/Green to Yellow/Yellow Delineator

David W. Desilet
PE No. 24760

SHEET
C27

DATE: 09/28/2000
TIME: 11:05am
XREF: NONE
SCALE: N/A
PLOT SCALE: 1
SPACE: PSPACE
PLOT SCALE: 1
PLOT CONFIG: LINCKS.PCP
PLOT STYLE: LINCKS.CTB (AC42000)
FILE: LINCKS\PROTOTYPE.dwg DWG

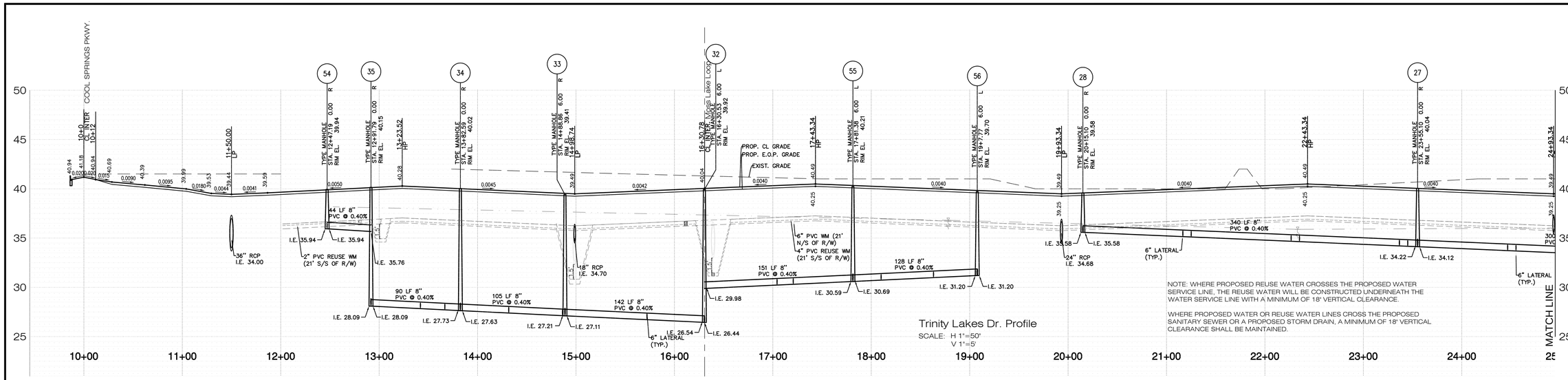

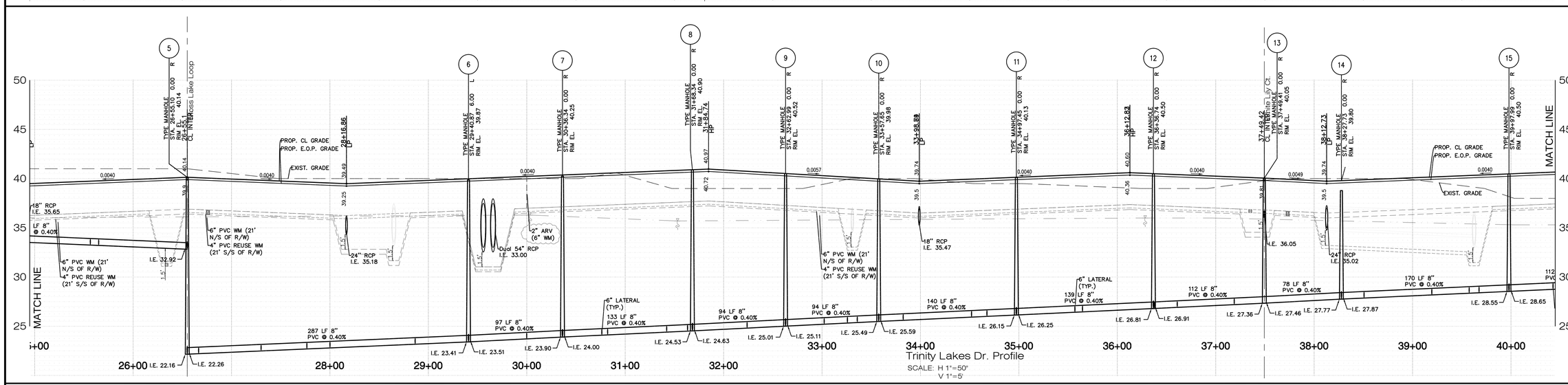

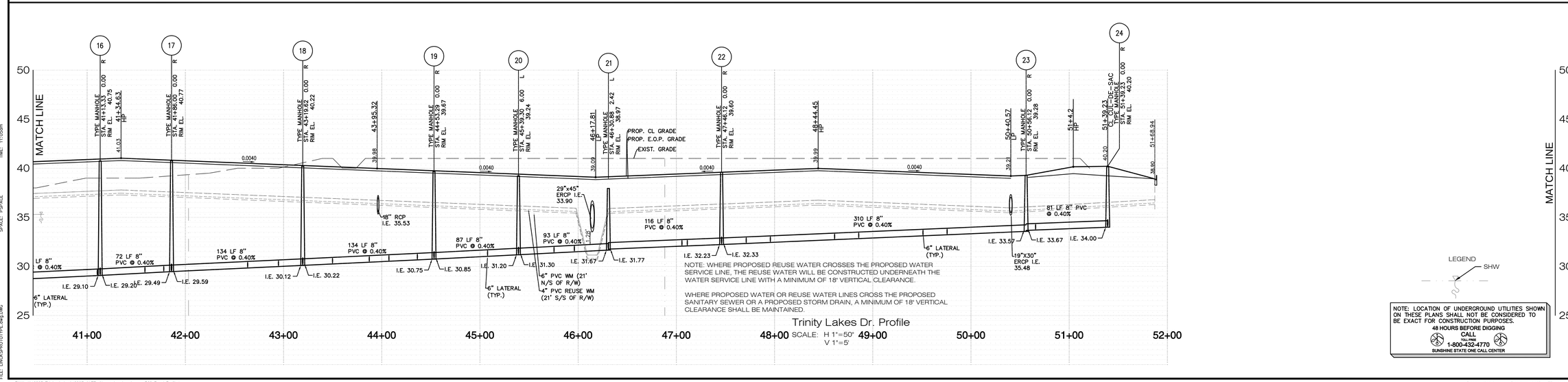

LINCKS & ASSOCIATES, INC.
5023 West Laurel Street
Tampa, Florida 33607
Tel (813) 289-0039
Fax (813) 287-0574
Lic. No. EB0004638
Engineers
Planners

DATE	01/26/2012
DESIGNED	
DRAWN	DWM
CHECKED	DWD
JOB NO.	10087

The Villages of Trinity Lakes

Roadway Profiles

REVISIONS

06/12/2012	Revised Reuse Water Sizes
08/08/2012	Added 2" ARV @ Station 30+0 (Trinity Lakes)
10/10/2012	Rev. Sani Mh Inv's from #24 to #5 to Resolve Storm Drain Conflict

David W. Desilet
PE No. 24760

SHEET
C28

DATE: 08/08/2000
TIME: 11:05am
XREF: NONE
SCALE: N/A
LAYOUT: LAYOUTS
SPACE: PSPACE
PLOT SCALE: 1
PLOT CONFIG: LINCKS.PCP
DWG: E:\LINCKS\PROTOTYPE\A0D2000\
FILE: LINCKSPROTOTYPE.dwg DWG

E:\Work\10087_Trinity_Lakes\10087_ALTD_Alternative.dwg, Layout C28_Road_Profile1
Date: 11/20/12
Drawing: 10087_ALTD_Alternative.dwg

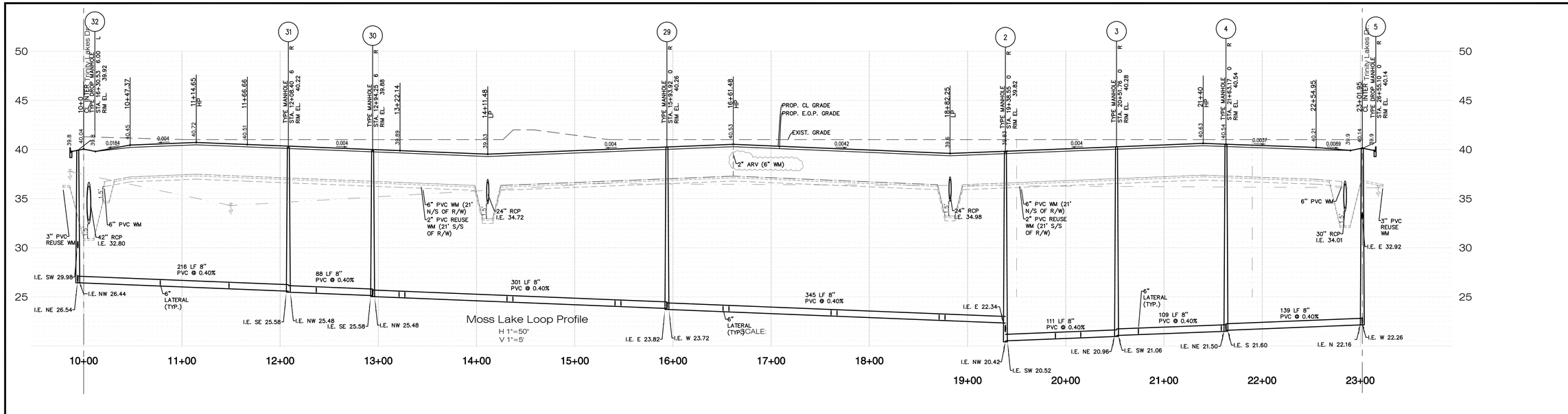

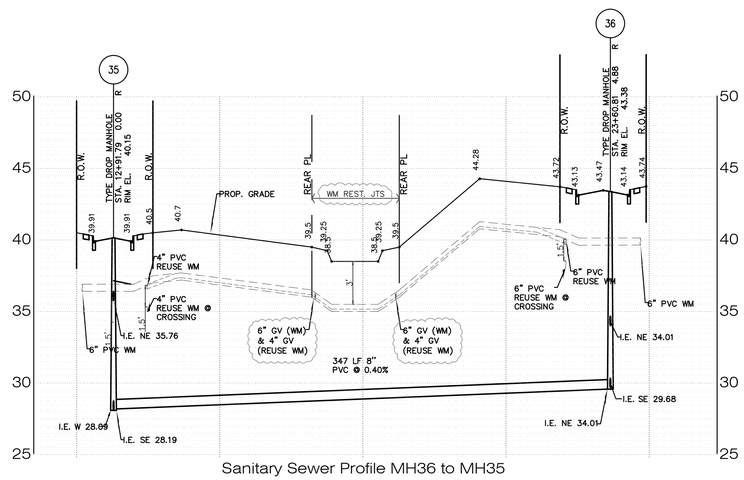

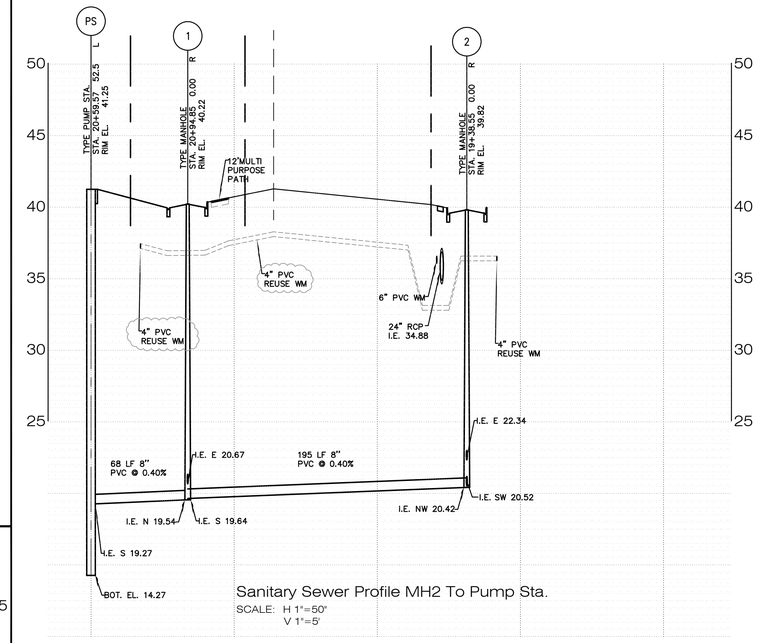

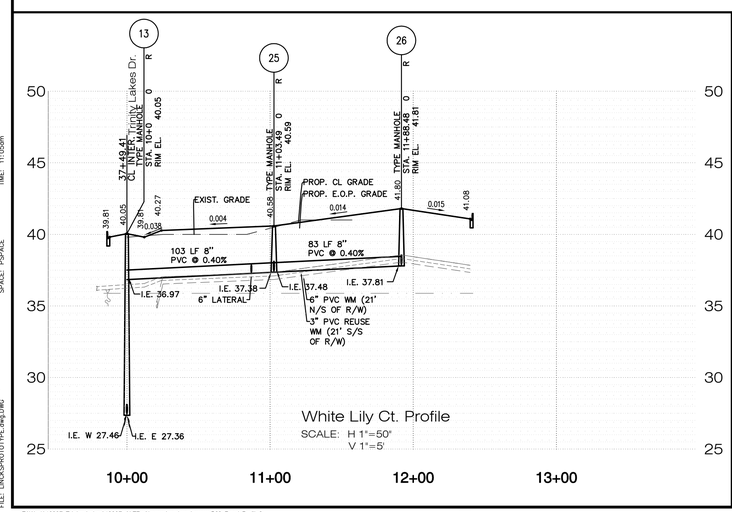

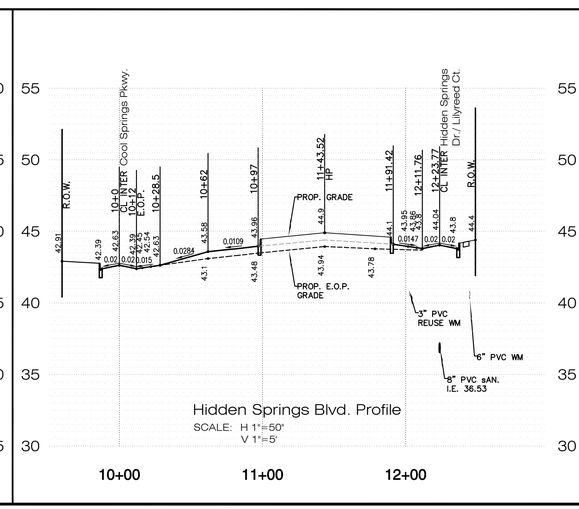

NOTE: WHERE PROPOSED REUSE WATER CROSSES THE PROPOSED WATER SERVICE LINE, THE REUSE WATER WILL BE CONSTRUCTED UNDERNEATH THE WATER SERVICE LINE WITH A MINIMUM OF 18" VERTICAL CLEARANCE.

WHERE PROPOSED WATER OR REUSE WATER LINES CROSS THE PROPOSED SANITARY SEWER OR A PROPOSED STORM DRAIN, A MINIMUM OF 18" VERTICAL CLEARANCE SHALL BE MAINTAINED.

NOTE: LOCATION OF UNDERGROUND UTILITIES SHOWN ON THESE PLANS SHALL NOT BE CONSIDERED TO BE EXACT FOR CONSTRUCTION PURPOSES.
48 HOURS BEFORE DIGGING
CALL
CALL FREE
1-800-432-4770
SUNSHINE STATE ONE CALL CENTER

LINCKS & ASSOCIATES, INC.
5023 West Laurel Street
Tampa, Florida 33607
Tel (813) 289-0039
Fax (813) 287-0574
Lic. No. EB0004638
Engineers
Planners

DATE	01/26/2012
DESIGNED	
DRAWN	DWM
CHECKED	DWD
JOB NO.	10087

The Villages of Trinity Lakes

Roadway Profiles

REVISIONS

06/12/2012	Revised Reuse Water Sizes
08/09/2012	Added 4" Reuse Water to SS Profile MH2 to Pump Sta., Added 2" ARV @ Station 19+61.5
-	(Moss Lake Loop), (2) GV's Each for WM & Reuse (#WM36 to MH35 Profile)
10/10/2012	Rev. San MH Inv's from #5 to #2, #2 to Pump Sta.& #13 to Resolve Storm Drain Conflict
-	-
-	-
-	-
-	-
-	-

David W. Desilet
PE No. 24760

SHEET
C29

DATE: 08/08/2000
TIME: 11:05am
XREF: NONE
SCALE: N/A
LAYER: LINCKS
SPACE: PSPACE
PLOT SCALE: 1
PLOT CONFIG: LINCKS.PCP
PLOT STYLE: LINCKS.CTB
FILE: LINCKSROTOTYPE.dwg
E:\Work\10087_Trinity_Lakes\10087_ALTD_Alternative.dwg, Layout C29_Road_Profile2
Date: 11/20/12
Drawing: 10087_ALTD_Alternative.dwg

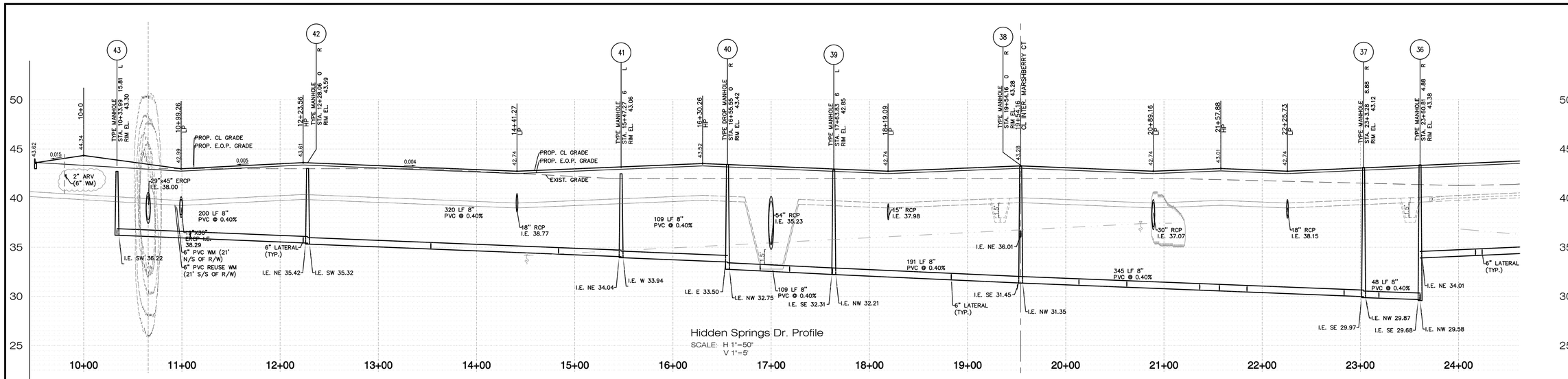

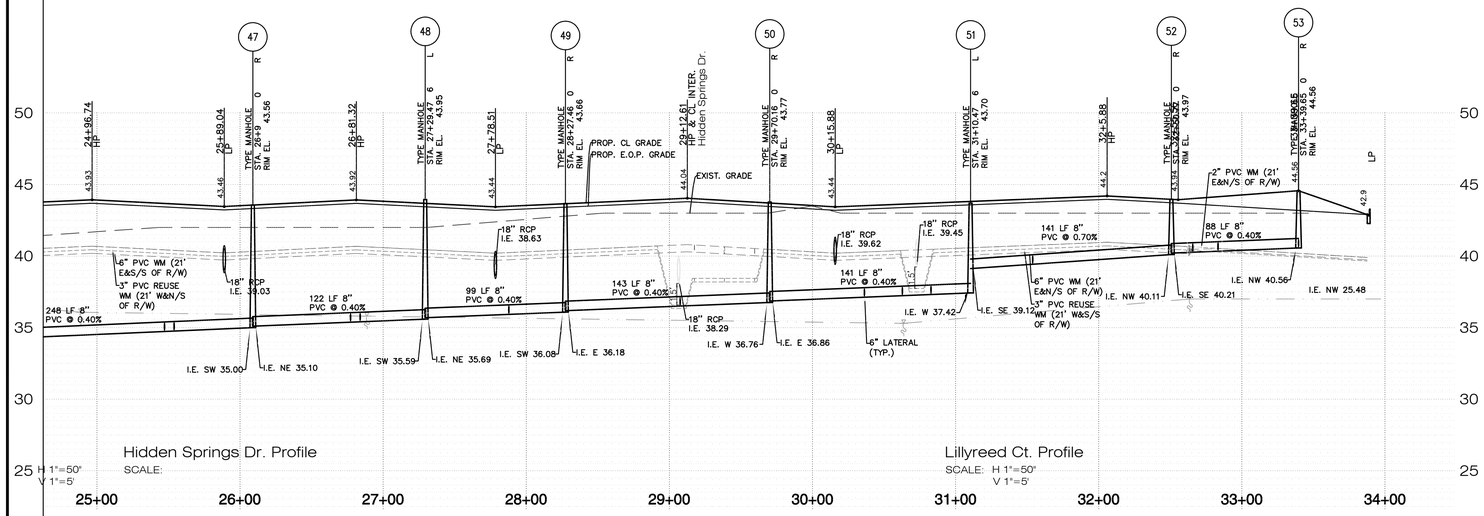

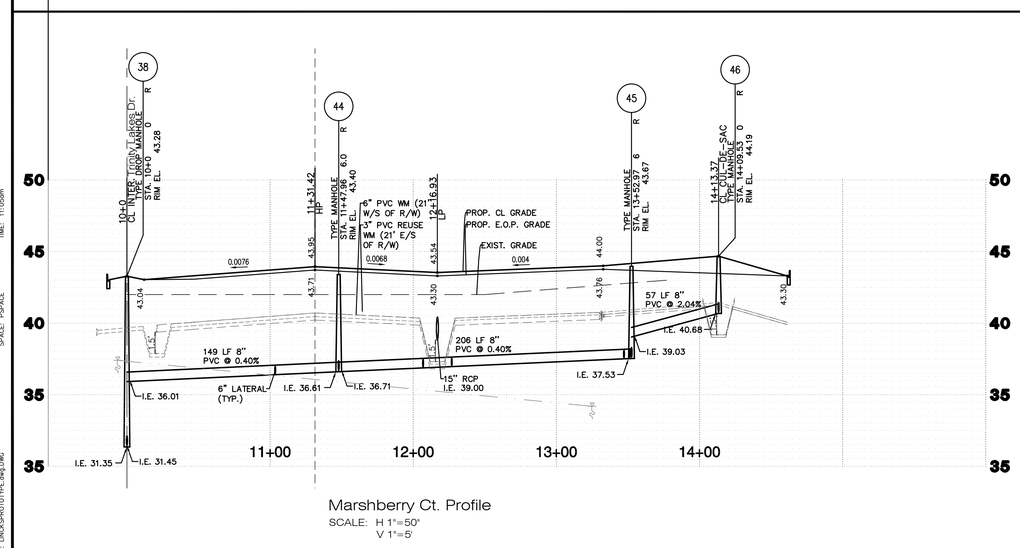

NOTE: LOCATION OF UNDERGROUND UTILITIES SHOWN ON THESE PLANS SHALL NOT BE CONSIDERED TO BE EXACT FOR CONSTRUCTION PURPOSES.
48 HOURS BEFORE DIGGING
CALL
TOLL FREE
1-800-432-4770
SUNSHINE STATE ONE CALL CENTER

LINCKS & ASSOCIATES, INC.
5023 West Laurel Street
Tampa, Florida 33607
Tel (813) 289-0039
Fax (813) 287-0574
Lic. No. EB0004638
Engineers
Planners

DATE	01/26/2012
DESIGNED	
DRAWN	DWM
CHECKED	DWD
JOB NO.	10087

The Villages of Trinity Lakes

Roadway Profiles

REVISIONS

06/12/2012	Revised Reuse Water Sizes
08/08/2012	Added 2" ARV @ Station 9+81± (Hidden Springs Dr.)

David W. Desilet
PE No. 24760

SHEET C30

DATE: 08/08/2000
TIME: 11:05am
XREF: NONE
SCALE: N/A
PLOT STYLE: LINCKS
SPACE: PSPACE
PLOT SCALE: 1
PLOT CONFIG: LINCKS.PCP
PLOT STYLE: LINCKS.CTB
FILE: LINCKSPROTOTYPE.dwg DWG

E:\Work\10087_Trinity_Lakes\10087_ALTD_Alternative.dwg, Layout C30_Road_Profile3

Date: 11/20/12 Drawing: 10087_ALTD_Alternative.dwg

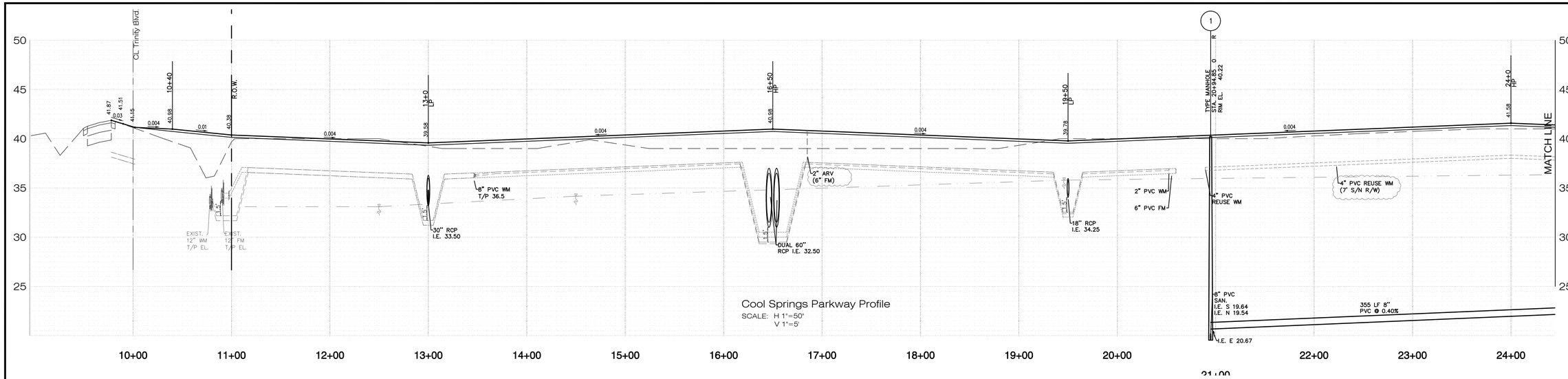

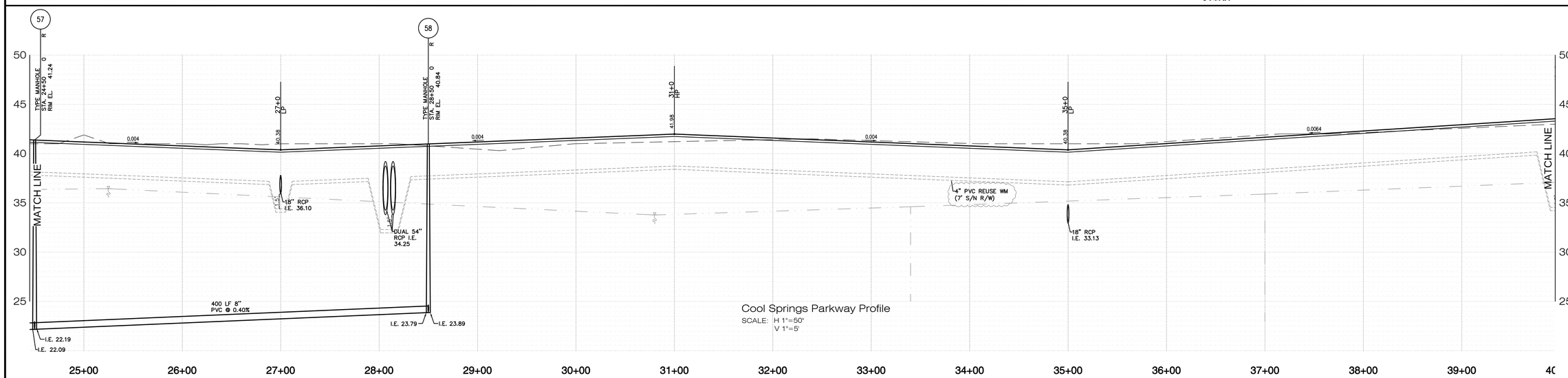

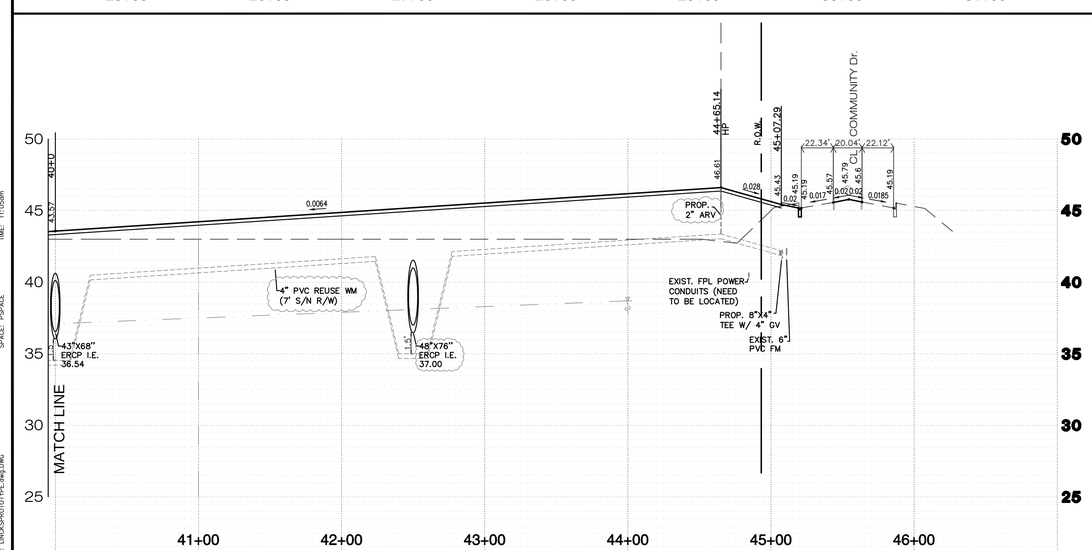

NOTE: LOCATION OF UNDERGROUND UTILITIES SHOWN ON THESE PLANS SHALL NOT BE CONSIDERED TO BE EXACT FOR CONSTRUCTION PURPOSES.
48 HOURS BEFORE DIGGING
CALL
TOLL FREE
1-800-432-4770
SUNSHINE STATE ONE CALL CENTER

LINCKS & ASSOCIATES, INC.
5023 West Laurel Street
Tampa, Florida 33607
Tel (813) 289-0039
Fax (813) 287-0574
Lic. No. EB0004638
Engineers
Planners

DATE	01/26/2012
DESIGNED	
DRAWN	DWM
CHECKED	DWD
JOB NO.	10087

The Villages of Trinity Lakes

Roadway Profiles

REVISIONS

02/28/12	Added Sec. MH's 58, 58, & 58 to Profile, Rev. Location of Twin 54"x 4 @ Sta. 28+10.34
06/12/2012	Revised Reuse Water Sizes
08/09/2012	Added 4" Reuse Water to Cool Springs Pkwy to Community Drive, Added 2" ARV @ Station 16+85 (FM) & Station 44+65 (Reuse WM)

David W. Desilet
PE No. 24760

SHEET C31

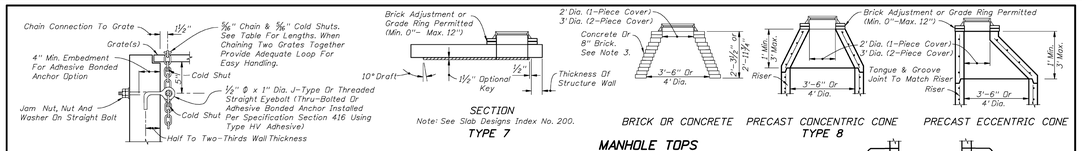

NOTE: When Alternate "G" grate is specified, the chain, bolt, nuts, washer and cold shuts shall be galvanized in accordance with Section 425 of the Standard Specifications.

Cost of eyebolt and chain to be included in the contract unit price for inlets.

EYEBOLT AND CHAIN REQUIREMENTS				
Index Number	Inlet Type	Eye-Bolts	Length Of Chain	Handling & Remarks
217	(MB) 1	1	4'-0"	Slide & Spin
	(MB) 2	1	4'-0"	Slide & Spin
	(MB) 3	2	2 @ 4'-0"	Slide & Spin
	(MB) 4	2	2 @ 4'-0"	Slide & Spin
	(MB) 5	2	2 @ 4'-0"	Slide & Spin
218	(BW)	1	3'-8"	Slide Or Slide & Spin
219	(BW, RGD)	1	4'-0"	Slide & Spin
220	S	1	4'-0"	Slide & Spin
221	V	1	4'-0"	Slide & Spin
230	A	1	3'-0"	Slide
231	B	1	5'-0"	Slide & Spin
232	C	1	2'-6"	Slide & Spin
	D	1	2'-6"	Slide & Spin
	E	2	2 @ 2'-6"	Slide & Spin
	H	2	2 @ 2'-6"	Flip Ctr. Grate and Slide & Spin Single Free Grate
		1 or 2	@ 1'-6"	Ctr. Grate(s) Chained To One End Grate
233	F	1	3'-6"	Flip Or Slide & Spin
	G	1	6'-0"	Slide
			2'-0"	Lifting Loop
234	J	1	4'-0"	Slide & Spin

EYEBOLT AND CHAIN FOR LOCKING GRATES TO INLETS

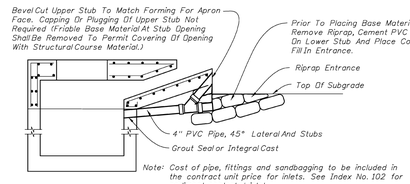

Note: Cost of pipe, fittings and sandbagging to be included in the contract unit price for inlets. See Index No. 102 for sediment control at inlet.

TEMPORARY DRAINS FOR SUBGRADE AND BASE

NOTES (TOPS)

1. Manhole top Type 7 slabs shall be of Class II concrete. Concrete as specified in ASTM C478 may be used for precast units: see General Note No. 3.
2. Manhole top Type 7 slabs may be of cast-in-place or precast construction. The optional key is for precast tops and in lieu of dowels. Frame and slab openings are to be omitted when top is used over a junction box.
3. Manhole top Type 8 may be of cast-in-place or precast concrete construction or brick construction. For concrete construction, the concrete and steel reinforcement shall be the same as the supporting wall unit. An eccentric cone may be used.
4. Manhole tops shall be secured to structures by optional construction joints as shown on Sheet 3 of 4.
5. Frames can be adjusted a maximum 12" height with brick or precast ASTM C478 grade rings.
6. Substitution of manhole top Type 8 for manhole top Type 7 is allowed provided that minimum dimensions shown above are not reduced.
7. Substitution of Manhole top Type 7 for Type 8 is allowed if the minimum thickness (h) above pipe opening cannot be maintained with manhole top Type 8.

DESIGN NOTES

1. Manhole top Type 8 should be specified in the plans when depths shown above can be maintained.

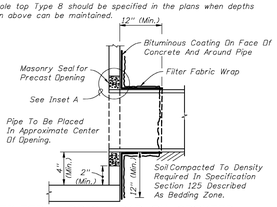

FILTER FABRIC WRAP ON GROUTED PIPE TO STRUCTURE JOINT

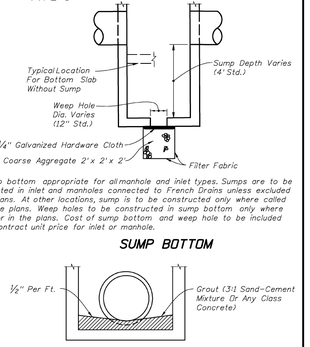

NOTE: Sump bottom appropriate for all manhole and inlet types. Sumps are to be constructed in inlet and manholes connected to French Drains unless excluded in the plans. At other locations, sump is to be constructed only where called for in the plans. Weep holes to be constructed in sump bottom only where called for in the plans. Cost of sump bottom and weep hole to be included in the contract unit price for inlet or manhole.

SUMP BOTTOM

FOR ALL STRUCTURES UNLESS EXCLUDED BY SPECIAL DETAIL

ALL PIPE TYPES DRAINAGE STRUCTURE INVERT

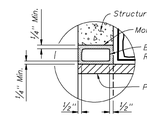

INSET A

2010 FDOT Design Standards

SUPPLEMENTARY DETAILS FOR MANHOLES AND INLETS

Last Revision 07/01/05 | Sheet No. 2 of 5 | Index No. 201

SCHEDULE OF BELL REINFORCEMENT Classes I, II, III, IV, V: Wall A, B, C		
Nominal Pipe Diameter	Design Bell Reinforcement in² per foot	Maximum Reinforcement Under Tolerance in² per foot
15"	0.07	0.010
18"	0.07	0.010
24"	0.09	0.010
30"	0.12	0.010
36"	0.14	0.010
42"	0.16	0.010
48"	0.19	0.011
54"	0.21	0.012
60"	0.23	0.0135
66"	0.26	0.015
72"	0.28	0.0165
78"	0.30	0.018
84"	0.33	0.0195
90"	0.35	0.021
96"	0.37	0.0225
102"	0.40	0.024
108"	0.42	0.0255

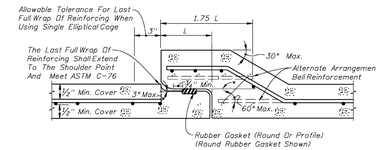

ROUND RUBBER GASKET SHOWN

DETAIL OF BELL & SPIGOT CONCRETE PIPE JOINT USING ROUND OR PROFILE RUBBER GASKET

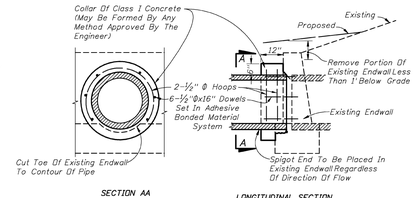

Note: Cost for removal and disposal of portions of top and toe of existing endwall and cost of concrete, reinforcing steel and construction of collar to be included in the contract unit price for pipe culvert.

CONCRETE COLLAR FOR EXTENSION OF EXISTING PIPE CULVERTS

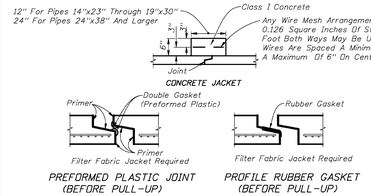

PREFORMED PLASTIC JOINT (BEFORE PULL-UP)

PROFILE RUBBER GASKET (BEFORE PULL-UP)

Cost of concrete jacket or filter fabric jacket to be included in cost of elliptical concrete pipe culverts.

ELLIPTICAL CONCRETE PIPE JOINTS

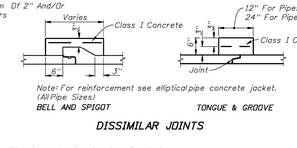

Note: For reinforcement see elliptical pipe concrete jacket. (All Pipe Sizes)

BELL AND SPIGOT

TONGUE & GROOVE

DISSIMILAR JOINTS

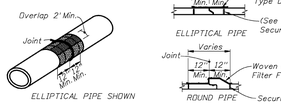

ISOMETRIC VIEW

PIPE SECTIONS

Cost of filter fabric jacket to be included in cost of pipe culverts.

FOR ALL PIPE TYPES – CONCRETE PIPE SHOWN

FILTER FABRIC JACKET

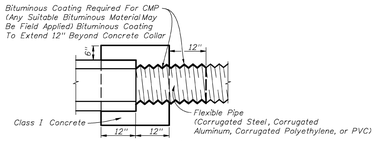

Note: Cost of concrete and bituminous coating to be included in contract unit price for either new pipe or Mitered End Section.

Alternate connection must be approved by the State Drainage Engineer.

A concrete jacket shall not be used to join:
(a) metal pipe of dissimilar materials
(b) flexible pipe when the minimum cover required in accordance with Index No. 205 cannot be obtained

DISSIMILAR TYPES

CONCRETE JACKET FOR CONNECTING DISSIMILAR TYPES OF PIPE AND CONCRETE PIPES WITH DISSIMILAR JOINTS

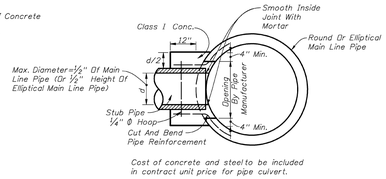

Cost of concrete and steel to be included in contract unit price for pipe culvert.

CONCRETE COLLAR FOR JOINING MAINLINE PIPE AND STUB PIPE

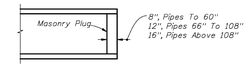

Note: Unless otherwise called for in the plans, the cost of plugging pipes to be included in contract unit price for new pipe.

PIPE PLUG

2010 FDOT Design Standards

MISCELLANEOUS DRAINAGE DETAILS

Last Revision 07/01/09 | Sheet No. 1 of 3 | Index No. 280

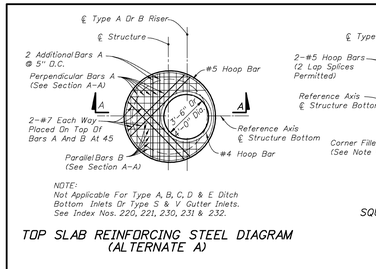

TOP SLAB REINFORCING STEEL DIAGRAM (ALTERNATE A)

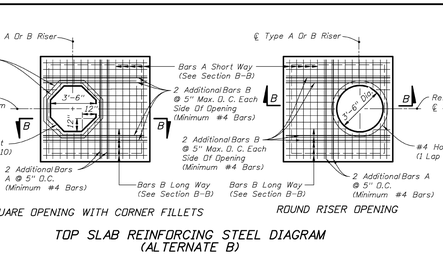

SQUARE OPENING WITH CORNER FILLETS

ROUND RISER OPENING

TOP SLAB REINFORCING STEEL DIAGRAM (ALTERNATE B)

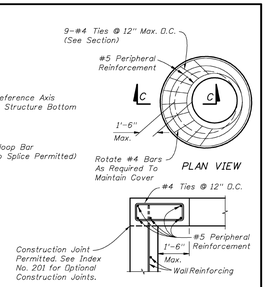

SECTION C-C

SPECIAL TOP SLAB*

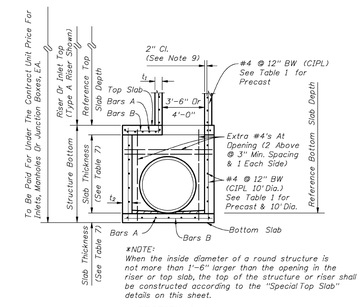

SECTION A-A

(ALTERNATE A)

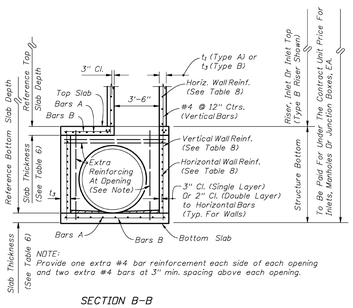

SECTION B-B

(ALTERNATE B)

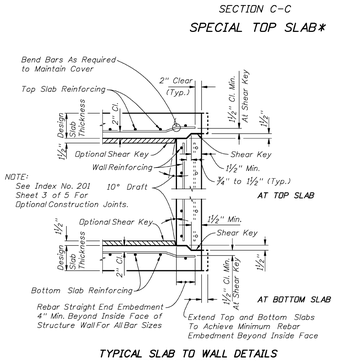

TYPICAL SLAB TO WALL DETAILS FOR PRECAST STRUCTURES

2010 FDOT Design Standards

STRUCTURES BOTTOMS TYPE J AND P

Last Revision 07/01/09 | Sheet No. 1 of 5 | Index No. 200

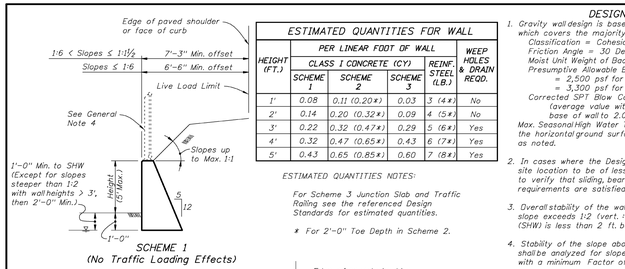

ESTIMATED QUANTITIES FOR WALL

HEIGHT (FT.)	PER LINEAR FOOT OF WALL: CLASS I CONCRETE (CY) SCHEME 1	SCHEME 2	SCHEME 3	REINF. STEEL (LB.)	WEEP HOLES & DRAIN REQD.
1'	0.08	0.11 (0.20*)	0.03	3 (4*)	No
2'	0.14	0.20 (0.32*)	0.09	4 (5*)	No
3'	0.22	0.32 (0.47*)	0.29	5 (6*)	Yes
4'	0.32	0.47 (0.65*)	0.43	6 (7*)	Yes
5'	0.43	0.65 (0.85*)	0.60	7 (8*)	Yes

ESTIMATED QUANTITIES NOTES:

For Scheme 3 Junction Slab and Traffic Railing see the referenced Design Standards for estimated quantities.

* For 2'-0" Toe Depth in Scheme 2.

DESIGN NOTES

1. Gravity wall design is based on the following soil criteria which covers the majority of soil types found in Florida:
   Classification = Cohesionless (Fine Sand)
   Friction Angle = 30 Degrees
   Moist Unit Weight of Backfill = 120 lbs./cu. ft.
   Presumptive Allowable Bearing Pressure:
   = 2,500 psf for slopes equal to or flatter than 1:1½
   = 3,500 psf for slopes steeper than 1:1½
   Corrected SPT Blow Count for foundation = 35 blows/ft. (average value within the range of depth from the base of wall to 2.0 x base width below wall).
   Max. Seasonal High Water Table (SHWT) is one (1) foot below the horizontal ground surface at the toe of the wall, except as noted.
2. In cases where the Designer considers the soil at the specific site location to be of lesser strength, an analysis is required to verify that sliding, bearing, overturning and stability requirements are satisfied.
3. Overall stability of the wall shall be analyzed when the backfill slope exceeds 1:2 (vert. : horiz.) or the seasonal high water (SHW) is less than 2 ft. below the ground surface.
4. Stability of the slope above the top of the gravity wall shall be analyzed for slopes steeper than 1:2 (vert. : horiz.) with a minimum Factor of Safety = 1.3.
5. For Scheme 1 or Scheme 2, when a roadside barrier is required above the wall (guardrail, barrier wall, etc.) the deflection space required for the barrier must be considered. Locate the barrier so that there is no conflict between guardrail posts or barrier footing and the gravity wall or soil reinforcement. This may result in an offset greater than the minimum offset for the live load limit.

GENERAL NOTES

1. Gravity walls constructed as extensions of reinforced concrete retaining walls, except walls of proprietary designs, shall have the same face texture and finish as the reinforced concrete retaining wall.
2. Concrete for Gravity Wall shall be Class NS per Section 347. Concrete for Scheme 3 Junction Slab and Traffic Railing shall be Class II per Section 346, unless otherwise specified in the plans.
3. Reinforcing steel shall be ASTM A615, Grade 40 or 60 provided at the max. spacings shown. ASTM A185 Smooth or ASTM A497 Deformed Welded Wire Fabric (WWF) may be substituted on an equal area basis. Do not increase bar/wire spacing for Grade 60 reinforcing steel or WWF.
4. When required, for adjunct guardrail or pedestrian/bicycle railings see the plans, Index No. 850, 860 or 870 as appropriate. For adjunct Type B fence see Index No. 802.
5. Joint seal to be two layers of 30# smooth roofing paper or Type D-3 geotextile fabric in accordance with Index No. 199. Mop all contact surfaces of concrete and roofing paper or geotextile fabric with cut-back asphalt. Stop roofing paper or geotextile fabric 6" below top of wall).
6. Provide a continuous 1'x1' clean gravel or crushed rock drain for wall heights 3 ft. and higher. Wrap drainage layer as shown, with Type D-3 geotextile fabric in accordance with Index No. 199. Provide 8"x8" galvanized mesh with ¼" openings, at the inside end of the PVC Drain Pipe. Provide 2" Ø PVC Drain Pipe (Sch. 40) at 10 ft. max. spacing (When Drainage Layer required). Locate minimum 2'-0" clear of wall joints.
7. Cost of reinforcing steel, face texture, finish, joint seal, drain pipes, drainage layer, galvanized mesh and geotextile fabric to be included in the Contract Unit Price for Class NS Concrete (Gravity Wall), CY. Cost of concrete for Junction Slab in Scheme 3, to be included in Contract Unit Price for Class II Concrete (Retaining Walls), CY. Adjunct traffic railings, pedestrian/bicycle railings or fences to be paid for separately.

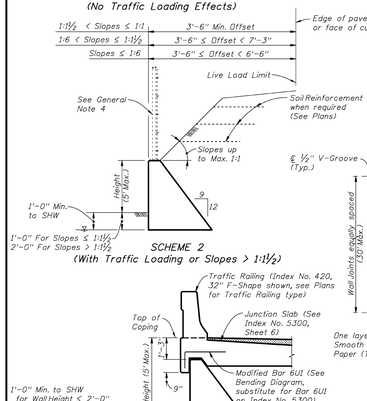

KEYWAY & WALL JOINT DETAIL (TOP VIEW)

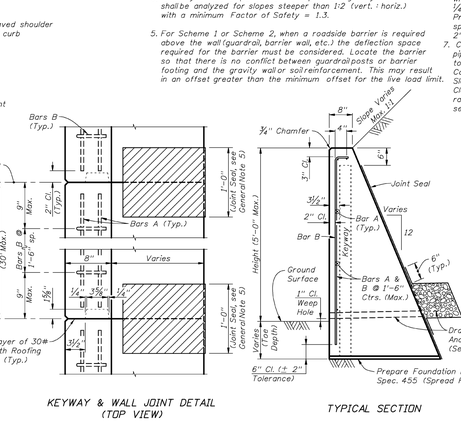

TYPICAL SECTION

BILL OF REINFORCING STEEL		
MARK	SIZE	LENGTH
A	4	As Reqd.
B	4	As Reqd.
U1 (Mod.)	6	3'-5"

BAR BENDING DIAGRAM

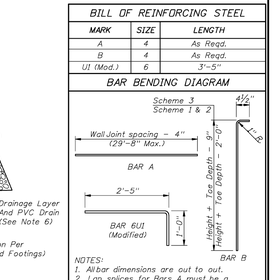

NOTES:
1. All bar dimensions are out to out.
2. Lap splices for Bars A must be a minimum of 1'-6".

2010 FDOT Design Standards

GRAVITY WALL

Last Revision 01/01/07 | Sheet No. 1 of 1 | Index No. 520

LINCKS & ASSOCIATES, INC.
5023 West Laurel Street
Tampa, Florida 33607
Tel (813) 289-0039
Fax (813) 287-0674
Lic. No. EB0004638
Engineers
Planners

DATE 01/26/2012
DESIGNED DWD
DRAWN DWM
CHECKED DWD
JOB NO. 10087

The Villages of Trinity Lakes

Drainage Details

REVISIONS

10/18/2012	Added Gravity Wall Detail Index 520

David W. Desilet
PE No. 24760

SHEET C32

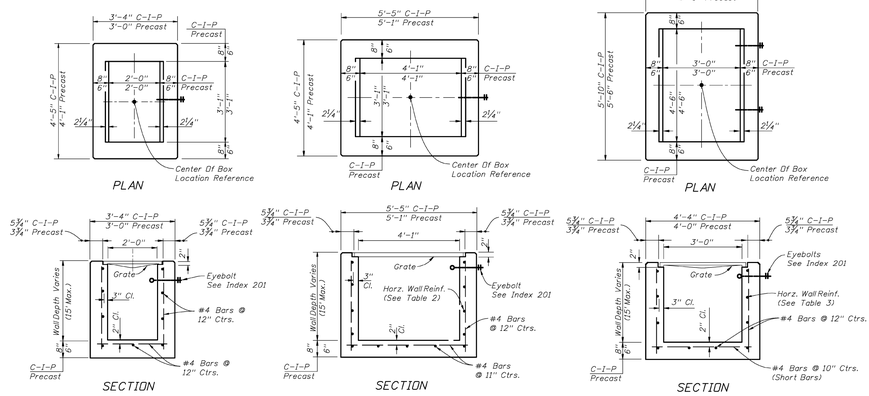

HORIZONTAL WALL REINFORCING SCHEDULES (TABLE 1)

WALL DEPTH	SCHEDULE	AREA (in.²/ft.)	MAX. SPACING BARS	MAX. SPACING WWF
0'-15'	A12	0.20	12"	8"

TYPE C

Recommended Maximum Pipe Size:
2'-0" Wall - 18" Pipe
3'-1" Wall - 24" Pipe (18" where an 18" pipe enters a 2'-0" wall)

HORIZONTAL WALL REINFORCING SCHEDULES (TABLE 2)

WALL DEPTH	SCHEDULE	AREA (in.²/ft.)	MAX. SPACING BARS	MAX. SPACING WWF
0'-6'	A12	0.20	12"	8"
6'-10"	A6	0.20	6"	5"
10'-13'	A4	0.20	4"	3"
10'-15'	B5.5	0.24	5½"	5"

TYPE D

Recommended Maximum Pipe Size:
3'-1" Wall - 24" Pipe
4'-1" Wall - 36" Pipe

HORIZONTAL WALL REINFORCING SCHEDULES (TABLE 3)

WALL DEPTH	SCHEDULE	AREA (in.²/ft.)	MAX. SPACING BARS	MAX. SPACING WWF
0'-5'	A12	0.20	12"	8"
0'-7.5'	A6	0.20	6"	5"
7.5'-10'	B5.5	0.24	5½"	5"
10'-15'	C6.5	0.37	6½"	6"

TYPE E

Recommended Maximum Pipe Size:
3'-0" Wall - 24" Pipe
4'-6" Wall - 36" Pipe

2010 FDOT Design Standards

DITCH BOTTOM INLET
TYPES C, D, E & H

Last Revision 07/01/05 | Sheet No. 1 of 7 | Index No. 232

DIMENSIONS AND QUANTITIES

	D	X	A	B	C	E	F	G	H ■	M Single Pipe	M Double Pipe	M Triple Pipe	M Quad. Pipe	N	5½" CONCRETE SLAB (CY) ◪ Single Pipe	Double Pipe	Triple Pipe	Quad. Pipe	SODDING (SQ. YDS.) Single Pipe	Double Pipe	Triple Pipe	Quad. Pipe
1:2 Slope	15"	2'-7"	1.92'	2.18'	4.10'	2.06'	5'	1.73'	2.9'	4.63'	7.21'	9.79'	12.37'	1.19'	0.38	0.58	0.77	0.96	21	24	27	30
	18"	2'-10"	1.97'	2.74'	4.71'	2.56'	6'	1.41'	3.4'	4.92'	7.75'	10.58'	13.42'	1.21'	0.44	0.65	0.87	1.09	22	25	28	31
	24"	3'-5"	2.06'	3.85'	5.91'	3.56'	7'	1.73'	3.4'	5.50'	8.92'	12.33'	15.75'	1.25'	0.54	0.83	1.12	1.42	24	28	32	36
	30"	4'-3"	2.15'	4.95"	7.10'	4.56'	8'	2.00'	3.4'	6.08'	10.33'	14.58'	18.83'	1.29'	0.66	1.09	1.50	1.91	26	31	36	40
	36"	5'-1"	2.25'	6.08'	8.33'	5.56'	9'	2.24'	3.4'	6.67'	11.75'	16.83'	21.92'	1.33'	0.81	1.38	1.95	2.51	28	34	39	45
	42"	6'-0"	2.34'	7.21'	9.55'	6.56'	10'	2.45'	3.4'	7.25'	13.25'	19.25'	25.25'	1.38'	0.97	1.70	2.45	3.19	30	37	43	50
	48"	6'-9"	2.43'	8.33'	10.76'	7.56'	11'	2.65'	3.4'	7.83'	14.58'	21.33'	28.08'	1.42'	1.13	2.04	2.93	3.84	32	39	47	54
	54"	7'-8"	2.52'	9.44'	11.96'	8.56'	12'	2.83'	3.4'	8.42'	16.08'	23.75'	31.42'	1.46'	1.31	2.44	3.58	4.72	34	42	51	59
	60"	8'-6"	2.62'	10.56'	13.18'	9.56'	14'	3.00'	4.4'	9.00'	17.50'	26.00'	34.50'	1.50'	1.51	2.89	4.28	5.68	35	45	55	64
	66"	9'-2"	2.71'	11.68'	14.39'	10.56'	15'	3.18'	4.4'	9.58'	18.75'	27.92'	37.08'	1.54'	1.68	3.25	4.84	6.43	38	49	58	68
	72"	10'-0"	2.80'	12.80'	15.60'	11.56'	16'	3.30'	4.4'	10.16'	20.16'	30.16'	40.16'	1.58'	1.89	3.74	5.59	7.45	40	51	62	73
1:4 Slope	15"	2'-7"	2.27'	4.09'	6.36'	4.03'	8'	1.22'	4.0'	4.63'	7.21'	9.79'	12.37'	1.19'	0.57	0.87	1.15	1.44	23	26	29	32
	18"	2'-10"	2.36'	5.12'	7.48'	5.03'	9'	1.41'	4.0'	4.92'	7.75'	10.58'	13.42'	1.21'	0.66	0.99	1.31	1.65	25	28	31	35
	24"	3'-5"	2.53'	7.18' △	9.71'	7.03' △	11'	1.73'	4.0'	5.50'	8.92'	12.33'	15.75'	1.25'	0.85	1.30	1.75	2.20	28	32	36	40
	30"	4'-3"	2.70'	9.25'	11.95'	9.03'	13'	2.00'	4.0'	6.08'	10.33'	14.58'	18.83'	1.29'	1.10	1.74	2.39	3.05	31	36	41	46
	36"	5'-1"	2.87'	11.31' ◇	14.18'	11.03' ◇	15'	2.24'	4.0'	6.67'	11.75'	16.83'	21.92'	1.33'	1.32	2.21	3.08	3.96	34	40	46	52
	42"	6'-0"	3.05'	13.37'	16.42'	13.03'	17'	2.45'	4.0'	7.25'	13.25'	19.25'	25.25'	1.38'	1.58	2.76	3.91	5.09	38	44	51	58
	48"	6'-9"	3.22'	15.43'	18.65'	15.03'	19'	2.65'	4.0'	7.83'	14.58'	21.33'	28.08'	1.42'	1.85	3.30	4.73	6.17	41	48	56	63
	54"	7'-8"	3.39'	17.49'	20.88'	17.03'	21'	2.83'	4.0'	8.42'	16.08'	23.75'	31.42'	1.46'	2.14	3.95	5.77	7.58	44	52	61	69
	60"	8'-6"	3.56'	19.55'	23.11'	19.03'	23'	3.00'	4.0'	9.00'	17.50'	26.00'	34.50'	1.50'	2.45	4.66	6.87	9.07	47	56	66	75
	66"	9'-2"	3.73'	21.62'	25.35'	21.03'	25'	3.18'	4.0'	9.58'	18.75'	27.92'	37.08'	1.54'	2.88	5.54	8.18	10.84	49	59	69	80
	72"	10'-0"	3.91'	23.68'	27.59'	23.03'	27'	3.30'	4.0'	10.16'	20.16'	30.16'	40.16'	1.58'	3.54	6.61	9.87'	13.13	52	63	74	85

◪ See General Note No. 3. See Sheet 5 Of 6 For 3" Slab Quantities

■ Values shown for estimating pipe quantities and are for information only.

B E
△ 6.42' △ 6.25' Dimensions permitted to allow use of 8' standard pipe lengths.
◇ 10.40' ◇ 10.10' Dimensions permitted to allow use of 12' standard pipe lengths.
△◇ Concrete slab shall be deepened to form bridge across crown of pipe. See section below.

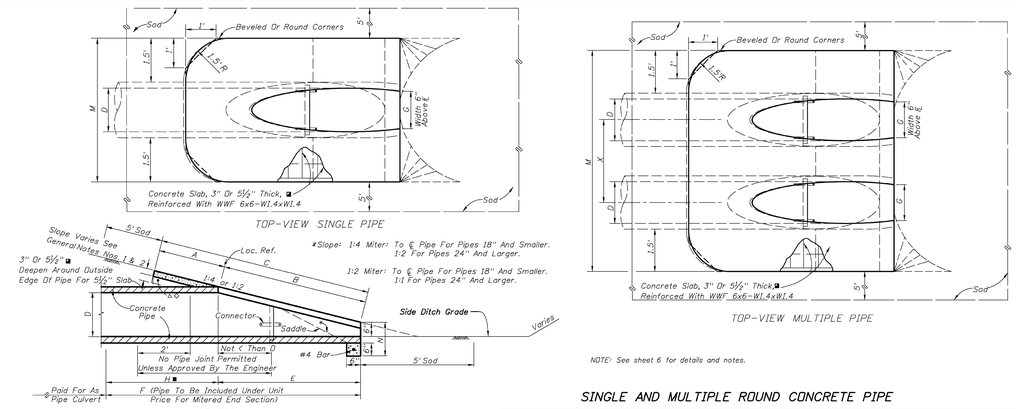

SINGLE AND MULTIPLE ROUND CONCRETE PIPE

2010 FDOT Design Standards

CROSS DRAIN MITERED END SECITON

Last Revision 02 | Sheet No. 1 of 6 | Index No. 272

DIMENSIONS & QUANTITIES

D	X	A	B	C	E	F	G	H ■	M Single Pipe	M Double Pipe	M Triple Pipe	M Quad Pipe	N	GRATE SIZES Standard Weight Pipe	GRATE SIZES Extra Strong Pipe	CONCRETE (Cu. Yds.) Single Pipe	Double Pipe	Triple Pipe	Quad Pipe	SODDING (Sq. Yds.) Single Pipe	Double Pipe	Triple Pipe	Quad Pipe
15"	2'-7"	2.27'	4.09'	6.36'	4.03'	8'	1.22'	4.0'	4.63'	7.21'	9.79'	12.37'	1.19'			0.76	1.16	1.54	1.94	8	10	11	12
18"	2'-10"	2.36'	5.12'	7.48'	5.03'	9'	1.41'	4.0'	4.92'	7.75'	10.58'	13.42'	1.21'			0.85	1.28	1.71	2.17	9	10	12	13
24"	3'-5"	2.53'	7.18' △	9.71'	7.03' △	11'	1.73'	4.0'	5.50'	8.92'	12.33'	15.75'	1.25'			1.02	1.58	2.15	2.75	10	12	13	15
30"	4'-3"	2.70'	9.25'	11.95'	9.03'	13'	2.00'	4.0'	6.08'	10.33'	14.58'	18.83'	1.29'	2½"	3"	1.23	1.98	2.74	1.50	12	14	15	17
36"	5'-1"	2.87'	11.31' ◇	14.18'	11.03' ◇	15'	2.24'	4.0'	6.67'	11.75'	16.83'	21.92'	1.33'	2½"	3"	1.40	2.38	3.33	4.24	13	15	17	20
42"	6'-0"	3.05'	13.37'	16.42'	13.03'	17'	2.45'	4.0'	7.25'	13.25'	19.25'	25.25'	1.38'	2½"	3½"	1.60	2.83	4.04	5.26	14	17	19	22
48"	6'-9"	3.22'	15.43'	18.65'	15.03'	19'	2.65'	4.0'	7.83'	14.58'	21.33'	28.08'	1.42'	2½"	3½"	1.81	3.26	4.70	6.14	15	18	21	24
54"	7'-8"	3.39'	17.49'	20.88'	17.03'	21'	2.83'	4.0'	8.42'	16.08'	23.75'	31.42'	1.46'	3"	4"	2.03	3.78	5.54	7.28	17	20	23	27
60"	8'-6"	3.56'	19.55'	23.11'	19.03'	23'	3.00'	4.0'	9.00'	17.50'	26.00'	34.50'	1.50'	3"	4"	2.28	4.36	6.43	8.50	18	22	25	29

△ 6.42' △ 6.25' Dimensions permitted to allow use of 8' standard pipe lengths.
◇ 10.40' ◇ 10.10' Dimensions permitted to allow use of 12' standard pipe lengths.
△◇ Concrete slab shall be deepened to form bridge across crown of pipe. See section below.

■ Values shown for estimating pipe quantities and are for information only.

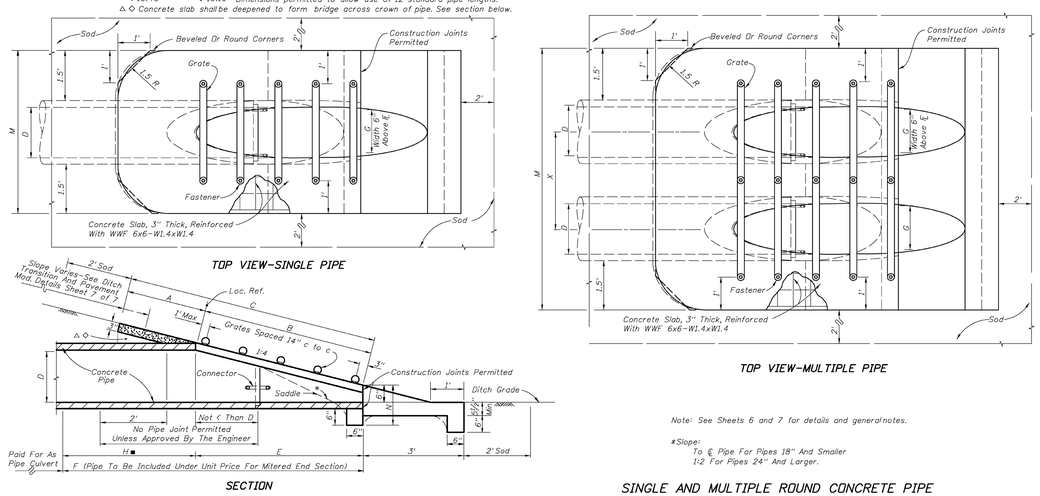

SINGLE AND MULTIPLE ROUND CONCRETE PIPE

2010 FDOT Design Standards

SIDE DRAIN MITERED END SECTION

Last Revision 02 | Sheet No. 1 of 7 | Index No. 273

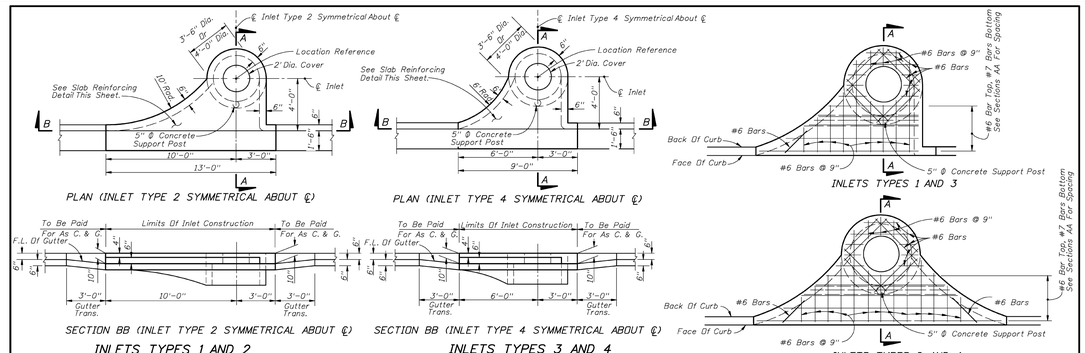

SLAB REINFORCING

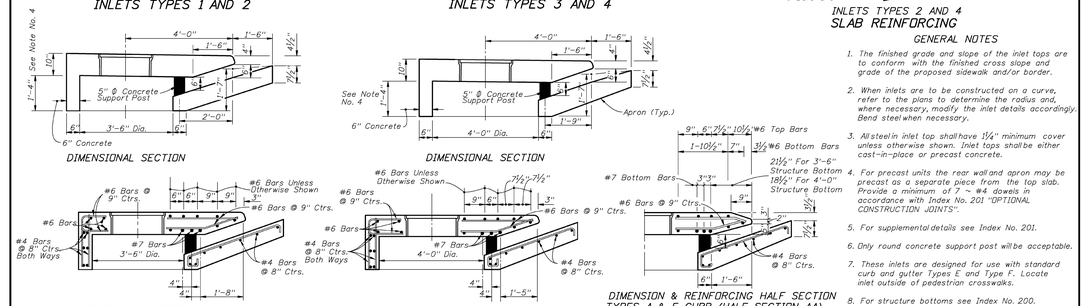

TRANSVERSE SECTIONS FOR INLETS TYPES 1, 2, 3 & 4

GENERAL NOTES

1. The finished grade and slope of the inlet tops are to conform with the finished cross slope and grade of the proposed sidewalk and/or border.
2. When inlets are to be constructed on a curve, refer to the plans to determine the radius and, where necessary, modify the inlet details accordingly. Bend steel when necessary.
3. All steel in inlet top shall have 1¼" minimum cover unless otherwise shown. Inlet tops shall be either cast-in-place or precast concrete.
4. For precast units the rear wall and apron may be precast as a separate piece from the top slab. Provide a minimum of 7 - #4 dowels in accordance with Index No. 201 "OPTIONAL CONSTRUCTION JOINTS".
5. For supplemental details see Index No. 201.
6. Only round concrete support post will be acceptable.
7. These inlets are designed for use with standard curb and gutter Types E and Type F. Locate inlet outside of pedestrian crosswalks.
8. For structure bottoms see Index No. 200.
9. Inlet to be paid for under the contract unit price for inlets (Curb) (Type_), Each.

2010 FDOT Design Standards

CURB INLET TOPS TYPES 1, 2, 3 & 4

Last Revision 07/01/09 | Sheet No. 1 of 1 | Index No. 210

LINCKS & ASSOCIATES, INC.
5023 West Laurel Street
Tampa, Florida 33607
Tel (813) 289-0039
Fax (813) 287-0674
Lic. No. EB0004638
Engineers
Planners

DATE	01/26/2012
DESIGNED	DWD
DRAWN	DWM
CHECKED	DWD
JOB NO.	10087

The Villages of Trinity Lakes

Drainage Details

REVISIONS

David W. Desilet
PE No. 24760

SHEET C33

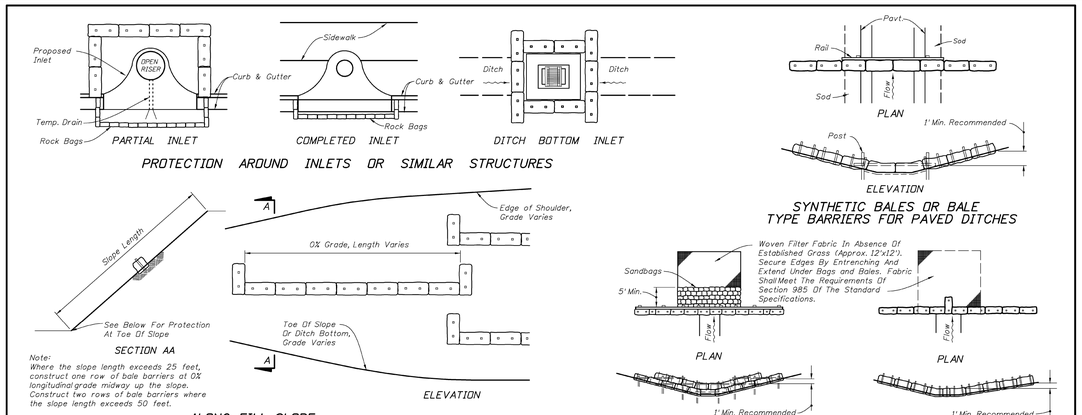

NOTES FOR SYNTHETIC BALES OR BALE TYPE BARRIERS

1. Type I and II Synthetic Barrier should be spaced in accordance with Chart 1, Sheet 1.
2. Bales shall be anchored with 2-1" x 2" (or 1" dia.) x 4' wood stakes. Stakes of other material or shape providing equivalent strength may be used if approved by the Engineer. Stakes other than wood shall be removed upon completion of the project.
3. Rails and posts shall be 2" x 4" wood. Other materials providing equivalent strength may be used if approved by the Engineer.
4. Adjacent bales shall be butted firmly together.
5. Where used in conjunction with silt fence, bales shall be placed on the upstream side of the fence.
6. Bales to be paid for under the contract unit price for Synthetic Bales, LF. The unit price shall include the cost of filter fabric for Type I and II Barriers. Sandbags shall be paid for under the unit price for Sandbagging, CY. Rock bags to be paid for under the contract unit price for Rock Bags, EA.

2010 FDOT Design Standards	Last Revision	Sheet No.
TEMPORARY EROSION AND SEDIMENT CONTROL	07/01/09	2 of 3
	Index No. 102	

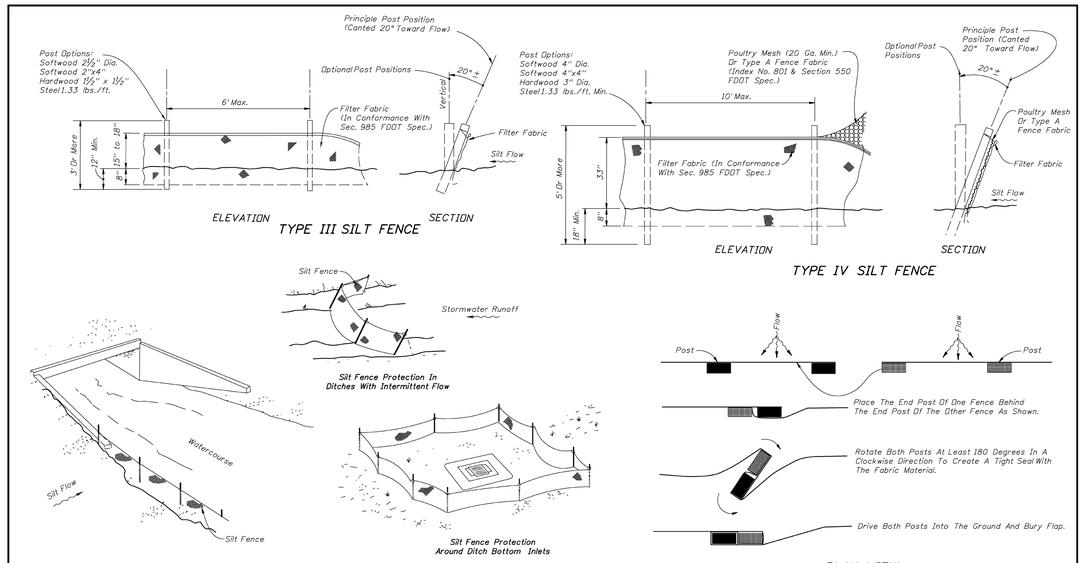

NOTES FOR SILT FENCES

1. Type III Silt Fence to be used at most locations. Where used in ditches, the spacing for Type III Silt fence shall be in accordance with Chart 1, Sheet 1.
2. Type IV Silt Fence to be used where large sediment loads are anticipated. Suggested use is where fill slope is 1:2 or steeper and length of slope exceeds 25 feet. Avoid use where the detained water may back into travel lanes or off the right of way.
3. Do not construct silt fences across permanent flowing watercourses. Silt fences are to be at upland locations and turbidity barriers used at permanent bodies of water.
4. Where used as slope protection, Silt Fence is to be constructed on 0% longitudinal grade to avoid channelizing runoff along the length of the fence.
5. Silt Fence to be paid for under the contract unit price for Staked Silt Fence, (LF).

2010 FDOT Design Standards	Last Revision	Sheet No.
TEMPORARY EROSION AND SEDIMENT CONTROL	07/01/09	3 of 3
	Index No. 102	

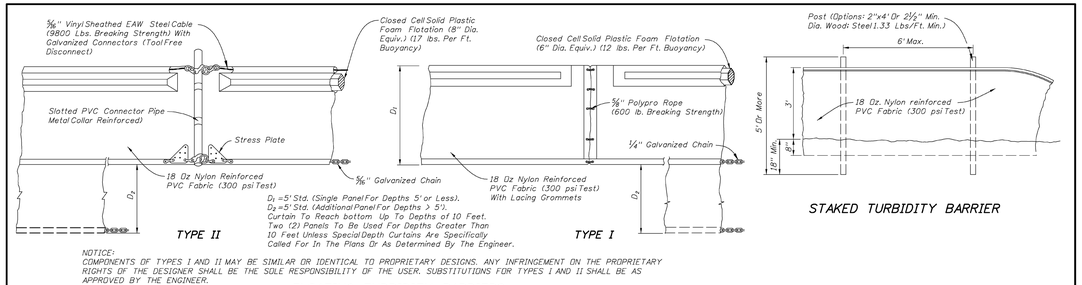

Notes:
1. Turbidity barriers are to be used in all permanent bodies of water regardless of water depth.
2. Number and spacing of anchors dependent on current velocities.
3. Deployment of barrier around pile locations may vary to accommodate construction operations.
4. Navigation may require segmenting barrier during construction operations.
5. For additional information see Section 104 of the Standard Specifications.

Note:
Turbidity barriers for flowing streams and tidal creeks may be either floating, or staked (types or any combinations of types that will suit site conditions and meet erosion control and water quality requirements. The barrier type(s) will be at the Contractor's option unless otherwise specified in the plans, however payment will be under the pay item(s) established in the plans for Floating Turbidity Barrier and/or Staked Turbidity Barrier. Posts in staked trubidity barriers to be installed in vertical position unless otherwise directed by the Engineer.

GENERAL NOTES

1. Floating turbidity barriers are to be paid for under the contract unit price for Floating Turbidity Barrier, LF.
2. Staked turbidity barriers are to be paid for under the contract unit price for Staked Turbidity Barrier, LF.

2010 FDOT Design Standards	Last Revision	Sheet No.
TURBIDITY BARRIERS	07/01/07	1 of 1
	Index No. 103	

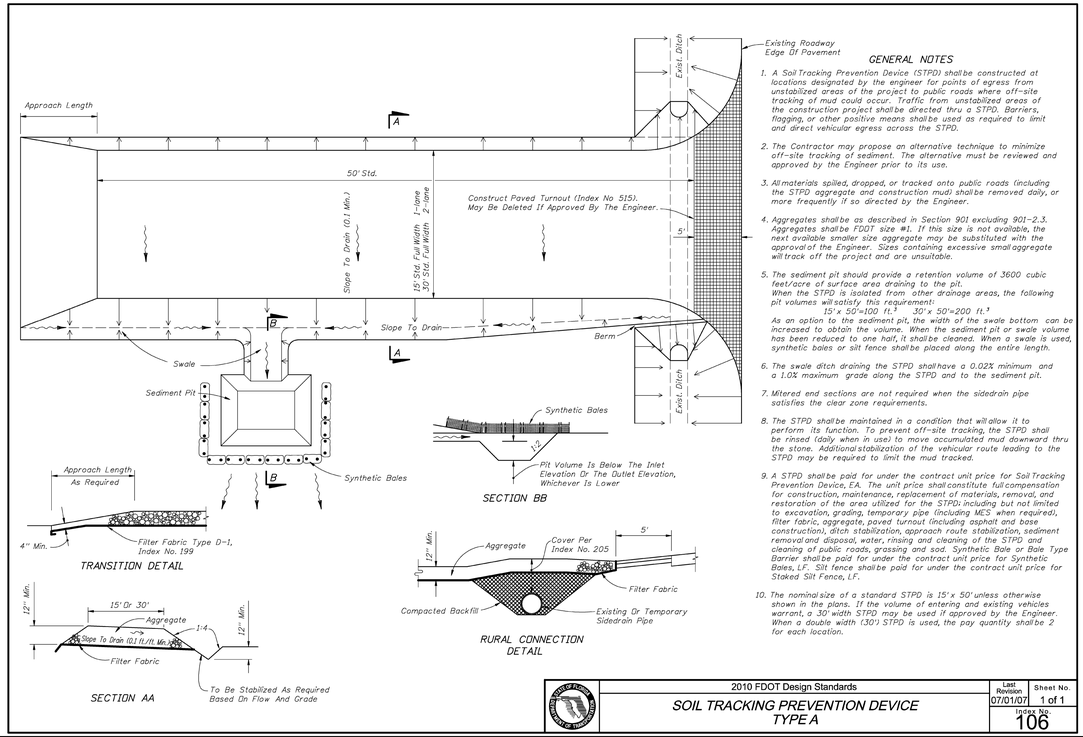

GENERAL NOTES

1. A Soil Tracking Prevention Device (STPD) shall be constructed at locations designated by the engineer for points of egress from unstabilized areas of the project to public roads where off-site tracking of mud could occur. Traffic from unstabilized areas of the construction project shall be directed thru a STPD. Barriers, flagging, or other positive means shall be used as required to limit and direct vehicular egress across the STPD.
2. The Contractor may propose an alternative technique to minimize off-site tracking of sediment. The alternative must be reviewed and approved by the Engineer prior to its use.
3. All materials spilled, dropped, or tracked onto public roads (including the STPD aggregate and construction mud) shall be removed daily, or more frequently if so directed by the Engineer.
4. Aggregates shall be as described in Section 901 excluding 901-2.3. Aggregates shall be FDOT size #1. If this size is not available, the next available smaller size aggregate may be substituted with the approval of the Engineer. Sizes containing excessive small aggregate will track off the project and are unsuitable.
5. The sediment pit should provide a retention volume of 3600 cubic feet/acre of surface area draining to the pit. When the STPD is isolated from other drainage areas, the following pit volumes will satisfy this requirement:
   15' x 50'=100 ft.^{3} 30' x 50'=200 ft.^{3}
   As an option to the sediment pit, the width of the swale bottom can be increased to obtain the volume. When the sediment pit or swale volume has been reduced to one half, it shall be cleaned. When a swale is used, synthetic bales or silt fence shall be placed along the entire length.
6. The swale ditch draining the STPD shall have a 0.02% minimum and a 1.0% maximum grade along the STPD and to the sediment pit.
7. Mitered end sections are not required when the sidedrain pipe satisfies the clear zone requirements.
8. The STPD shall be maintained in a condition that will allow it to perform its function. To prevent off-site tracking, the STPD shall be rinsed (daily when in use) to move accumulated mud downward thru the stone. Additional stabilization of the vehicular route leading to the STPD may be required to limit the mud tracked.
9. A STPD shall be paid for under the contract unit price for Soil Tracking Prevention Device, EA. The unit price shall constitute full compensation for construction, maintenance, replacement of materials, removal, and restoration of the area utilized for the STPD; including but not limited to excavation, grading, temporary pipe (including MES when required), filter fabric, aggregate, paved turnout (including asphalt and base construction), ditch stabilization, approach route stabilization, sediment removal and disposal, water, rinsing and cleaning of the STPD and cleaning of public roads, grassing and sod. Synthetic Bale or Bale Type Barrier shall be paid for under the contract unit price for Synthetic Bales, LF. Silt fence shall be paid for under the contract unit price for Staked Silt Fence, LF.
10. The nominal size of a standard STPD is 15' x 50' unless otherwise shown in the plans. If the volume of entering and existing vehicles warrant, a 30' width STPD may be used if approved by the Engineer. When a double width (30') STPD is used, the pay quantity shall be 2 for each location.

2010 FDOT Design Standards	Last Revision	Sheet No.
SOIL TRACKING PREVENTION DEVICE TYPE A	07/01/07	1 of 1
	Index No. 106	

LINCKS & ASSOCIATES, INC.
5023 West Laurel Street
Tampa, Florida 33607
Tel (813) 289-0039
Fax (813) 287-0674
Lic. No. EB0004638
Engineers
Planners

DATE	01/26/2012
DESIGNED	DWD
DRAWN	DWM
CHECKED	DWD
JOB NO.	10087

The Villages of Trinity Lakes

Drainage Details

REVISIONS

David W. Desilet
PE No. 24760

SHEET
C34

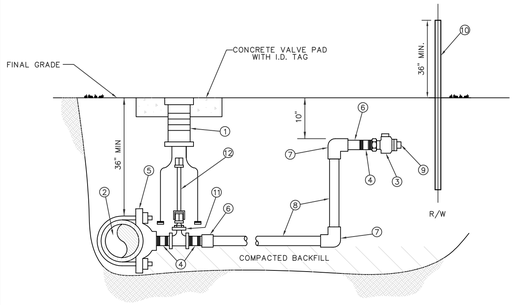

MATERIALS		
ITEM	QUANT.	DESCRIPTION
1	1	BOX, VALVE CAST IRON SLIP TYPE
2	*	4" & LARGER PIPE, PVC (DR-18) OR D.I.P. (CLASS 50)
3	2	1 1/2", 2" CURB STOP BALL VALVE W/ LOCK WINGS (FIP x FIP OR FIP x CTS)
4	3	1 1/2", 2" NIPPLE, BRASS OR STAINLESS STEEL
5	1	1 1/2", 2" SADDLE, SERVICE (I.P. THREADS)
6	2	1 1/2", 2" ADAPTER (PVC SCH 40 / SLIP x FPT OR BRASS MIP x CTS)
7	2	1 1/2", 2" 90° ELBOW (SLIP x SLIP) SCH 40 (NOT REQUIRED FOR HDPE)
8	*	1 1/2", 2" PIPE, PVC (SCH 40) OR HDPE (340B) - LENGTH VARIES
9	1	1 1/2", 2" PLUG, THREADED (W/ TEFLON TAPE)
10	1	2" x 4" P.T. MARKER STAKE
11	1	2" GATE VALVE, IRON BODY W/ SQUARE NUT
12	1	VALVE EXTENSION ROD, AS REQUIRED (3' MAX. BELOW GRADE)

NOTE:
- A VALVE BOX SHALL BE REQUIRED ON ALL GATE VALVES.
- SERVICE SADDLES SHALL BE INSTALLED ON ALL TAPS TO P.V.C. (DR-18) WATER MAINS.
- 2" GATE VALVE TO BE RESILIENT WEDGE IRON BODY TYPE WITH 2" OPERATING UNIT.
- SADDLES 4" AND LARGER TO BE DUCTILE IRON DUAL STRAP TYPE.
- 1 1/2" BRASS REDUCER BUSHING REQUIRED WITH ITEM NO. 11 FOR 1 1/2" SERVICE.
- MARKER STAKES PAINTED SAFETY BLUE FOR WATER, PURPLE FOR REUSE.
- 4" DIAMETER CASING REQUIRED FOR ROAD CROSSINGS

CREATED 02/24/03
REVISED

WATER AND REUSE LATERAL SERVICE 1 1/2" OR 2" SERVICE LATERAL PVC (SCHEDULE 40)

PASCO COUNTY UTILITIES

PROVIDED FOR INFORMATIONAL PURPOSES ONLY. NO MODIFICATIONS WITHOUT WRITTEN PCU APPROVAL

DETAIL 21

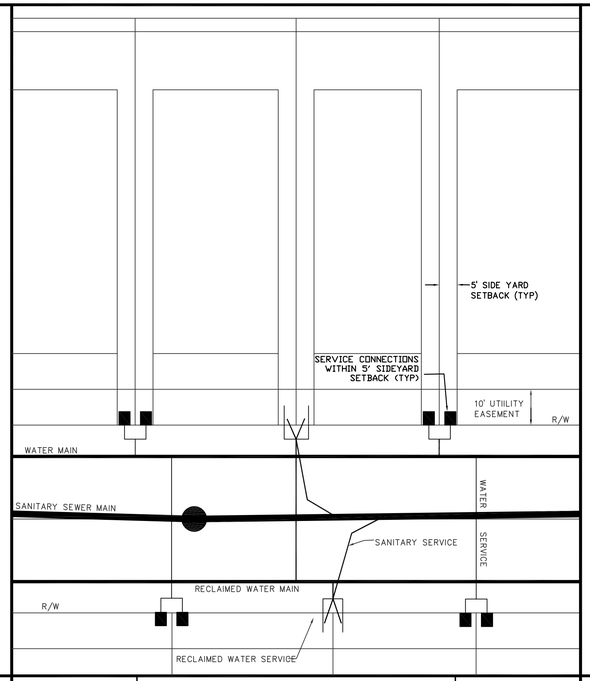

CREATED 02/24/03
REVISED

STANDARD 40' (DETACHED) SINGLE FAMILY TYPICAL UTILITY CONNECTION DETAIL

PASCO COUNTY UTILITIES

PROVIDED FOR INFORMATIONAL PURPOSES ONLY. NO MODIFICATIONS WITHOUT WRITTEN PCU APPROVAL

DETAIL 22

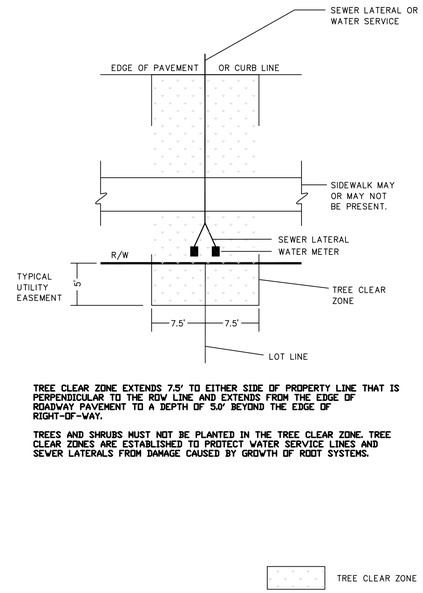

TREE CLEAR ZONE EXTENDS 7.5' TO EITHER SIDE OF PROPERTY LINE THAT IS PERPENDICULAR TO THE ROW LINE AND EXTENDS FROM THE EDGE OF ROADWAY PAVEMENT TO A DEPTH OF 5.0' BEYOND THE EDGE OF RIGHT-OF-WAY.

TREES AND SHRUBS MUST NOT BE PLANTED IN THE TREE CLEAR ZONE. TREE CLEAR ZONES ARE ESTABLISHED TO PROTECT WATER SERVICE LINES AND SEWER LATERALS FROM DAMAGE CAUSED BY GROWTH OF ROOT SYSTEMS.

CREATED 02/15/06
REVISED

METER INSTALLATION/SEWER LATERAL TREE CLEAR ZONE - RESIDENTIAL DEVELOPMENTS

PASCO COUNTY UTILITIES

PROVIDED FOR INFORMATIONAL PURPOSES ONLY. NO MODIFICATIONS WITHOUT WRITTEN PCU APPROVAL

DETAIL 23

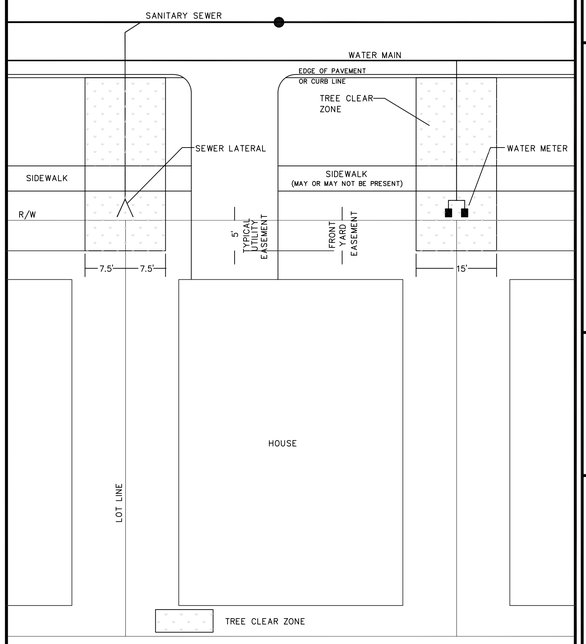

CREATED 03/14/06
REVISED

METER INSTALLATION/SEWER LATERAL TREE CLEAR ZONE - RESIDENTIAL DEVELOPMENTS

PASCO COUNTY UTILITIES

PROVIDED FOR INFORMATIONAL PURPOSES ONLY. NO MODIFICATIONS WITHOUT WRITTEN PCU APPROVAL

DETAIL 24

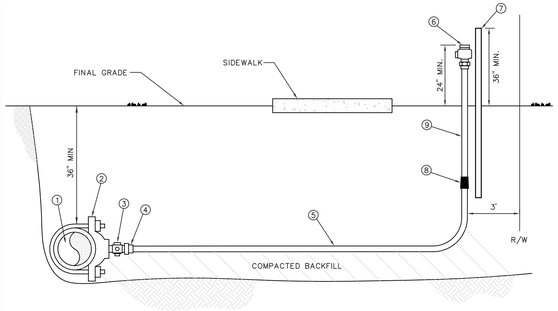

MATERIALS		
ITEM	QUANT.	DESCRIPTION
1	*	PIPE, PVC (DR-18) OR D.I.P.
2	1	SADDLE, SERVICE W/ 1" F.I.P. THREAD
3	1	1" CORPORATION (M.I.P. x COMP.)
4	1	1" INSERT (STAINLESS STEEL)
5	*	1" TUBING, POLYETHYLENE
6	1	3/4" WATER OR 1" REUSE CURB STOP BALL VALVE W/ LOCK WINGS (F.I.P. x COMP.)
7	1	2" x 4" P.T. MARKER STAKE
8	1	1" x 3/4" COUPLING (COMP. x COMP.) WATER ONLY
9	1	3/4" WATER OR 1" REUSE TUBING, POLYETHYLENE 4'

NOTES:
- ALL FITTINGS FOR POLYETHYLENE TUBING ARE BRASS COMPRESSION TYPE.
- A VALVE BOX MAY BE REQUIRED AS SPECIFIED BY THE ENGINEER.
- CURB STOP TO TERMINATE 24" ABOVE GROUND AT R/W LINE.
- REUSE CURB STOPS = 1" / WATER CURB STOPS = 3/4"
- TUBING TO BE YARDLEY 3406 OR EQUAL.
- SADDLES 2" - 3" TO BE BRASS FULL CIRCLE TYPE.
- SADDLES 4" AND LARGER TO BE D.I. DUAL STRAP TYPE.
- CURB STOPS TO BE TIED TO MARKER STAKE.
- SADDLE MAY BE INSTALLED AT ANGLE (WITHIN 45° OF HORIZONTAL).
- MARKER STAKES PAINTED SAFETY BLUE FOR WATER, PURPLE FOR REUSE.

CREATED 02/24/03
REVISED

SINGLE NEAR SIDE WATER SERVICE - 3/4" SINGLE NEAR SIDE REUSE SERVICE - 1" POLYETHYLENE TUBING

PASCO COUNTY UTILITIES

PROVIDED FOR INFORMATIONAL PURPOSES ONLY. NO MODIFICATIONS WITHOUT WRITTEN PCU APPROVAL

DETAIL 17

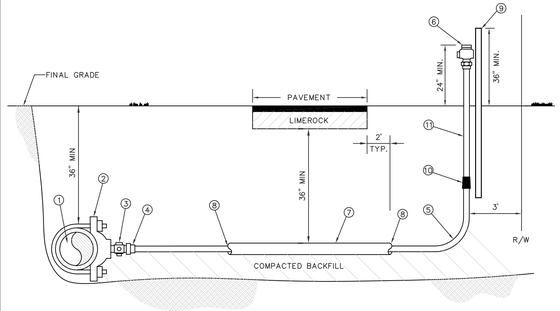

MATERIALS		
ITEM	QUANT.	DESCRIPTION
1	*	PIPE, PVC (DR-18) OR D.I.P.
2	1	SADDLE, SERVICE W/ 1" F.I.P. THREAD
3	1	1" CORPORATION (M.I.P. x COMP.)
4	1	1" INSERT (STAINLESS STEEL)
5	*	1" TUBING, POLYETHYLENE
6	1	3/4" WATER OR 1" REUSE CURB STOP BALL VALVE W/ LOCK WINGS (F.I.P. x COMP.)
7	*	2" CASING, PVC OR HDPE - 2' BEYOND EDGE PAVEMENT
8	*	SEALER, RAM-NEK
9	1	2" x 4" P.T. MARKER STAKE
10	1	1" x 3/4" COUPLING (COMP. x COMP.) WATER ONLY
11	1	3/4" WATER OR 1" REUSE TUBING, POLYETHYLENE 4'

NOTES: - ALL FITTINGS FOR POLYETHYLENE TUBING ARE BRASS COMPRESSION TYPE.
- A VALVE BOX MAY BE REQUIRED AS SPECIFIED BY THE ENGINEER.
- CURB STOP TO TERMINATE 24" ABOVE GROUND AT R/W LINE.
- REUSE CURB STOPS = 1" / WATER CURB STOPS = 3/4"
- TUBING TO BE YARDLEY 3406 OR EQUAL.
- SADDLES 2" - 3" TO BE BRASS FULL CIRCLE TYPE.
- SADDLES 4" AND LARGER TO BE D.I. DUAL STRAP TYPE.
- CURB STOPS TO BE TIED TO MARKER STAKE.
- SADDLE MAY BE INSTALLED AT ANGLE (WITHIN 45° OF HORIZONTAL).
- MARKER STAKES PAINTED SAFETY BLUE FOR WATER, PURPLE FOR REUSE.

CREATED 02/24/03
REVISED

SINGLE FAR SIDE WATER SERVICE - 3/4" SINGLE FAR SIDE REUSE SERVICE - 1" POLYETHYLENE TUBING

PASCO COUNTY UTILITIES

PROVIDED FOR INFORMATIONAL PURPOSES ONLY. NO MODIFICATIONS WITHOUT WRITTEN PCU APPROVAL

DETAIL 18

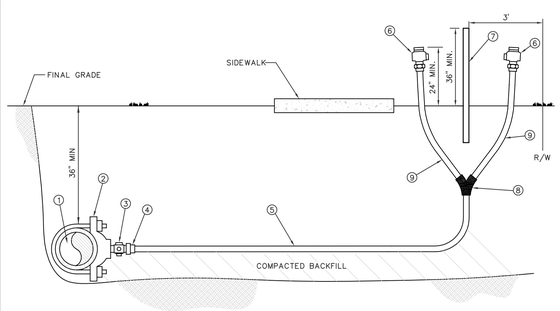

MATERIALS		
ITEM	QUANT.	DESCRIPTION
1	*	PIPE, PVC (DR-18) OR D.I.P.
2	1	SADDLE, SERVICE W/ 1" F.I.P. THREAD
3	1	1" CORPORATION (M.I.P. x COMP.)
4	1	1" INSERT (STAINLESS STEEL)
5	*	1" TUBING, POLYETHYLENE
6	1	3/4" WATER OR 1" REUSE CURB STOP BALL VALVE W/ LOCK WINGS (F.I.P. x COMP.)
7	1	2" x 4" P.T. MARKER STAKE
8	1	1" x 3/4" WYE BRANCH (COMP. x COMP.) WATER ONLY
	1	1" x 1" WYE BRANCH (COMP. x COMP.) REUSE ONLY
9	1	3/4" WATER OR 1" REUSE TUBING, POLYETHYLENE 4'

NOTES: - ALL FITTINGS FOR POLYETHYLENE TUBING ARE BRASS COMPRESSION TYPE.
- A VALVE BOX MAY BE REQUIRED AS SPECIFIED BY THE ENGINEER.
- CURB STOP TO TERMINATE 24" ABOVE GROUND AT R/W LINE.
- REUSE CURB STOPS = 1" / WATER CURB STOPS = 3/4"
- TUBING TO BE YARDLEY 3406 OR EQUAL.
- SADDLES 2" - 3" TO BE BRASS FULL CIRCLE TYPE.
- SADDLES 4" AND LARGER TO BE D.I. DUAL STRAP TYPE.
- CURB STOPS TO BE TIED TO MARKER STAKE.
- SADDLE MAY BE INSTALLED AT ANGLE (WITHIN 45° OF HORIZONTAL).
- MARKER STAKES PAINTED SAFETY BLUE FOR WATER, PURPLE FOR REUSE.

CREATED 02/24/03
REVISED

DOUBLE NEAR SIDE WATER SERVICE - 3/4" DOUBLE NEAR SIDE REUSE SERVICE - 1" POLYETHYLENE TUBING

PASCO COUNTY UTILITIES

PROVIDED FOR INFORMATIONAL PURPOSES ONLY. NO MODIFICATIONS WITHOUT WRITTEN PCU APPROVAL

DETAIL 19

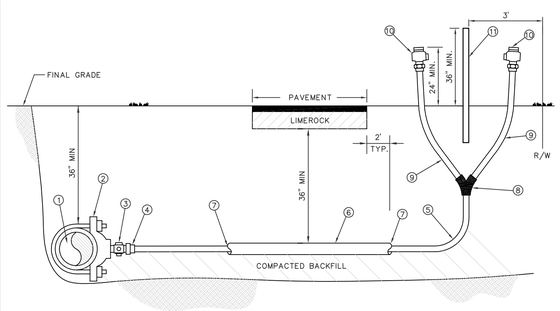

MATERIALS		
ITEM	QUANT.	DESCRIPTION
1	*	PIPE, PVC (DR-18) OR D.I.P.
2	1	SADDLE, SERVICE W/ 1" F.I.P. THREAD
3	1	1" CORPORATION (M.I.P. x COMP.)
4	1	1" INSERT (STAINLESS STEEL)
5	*	1" TUBING, POLYETHYLENE
6	*	2" CASING, PVC OR HDPE - 2' BEYOND EDGE PAVEMENT
7	*	SEALER, RAM-NEK
8	1	WYE BRANCH FOR POLY TUBING
9	2	3/4" WATER OR 1" REUSE TUBING, POLYETHYLENE 4'
10	2	3/4" WATER OR 1" REUSE CURB STOP BALL VALVE W/ LOCK WINGS (F.I.P. x COMP.)
11	1	2" x 4" P.T. MARKER STAKE

NOTES: - ALL FITTINGS FOR POLYETHYLENE TUBING ARE BRASS COMPRESSION TYPE.
- A VALVE BOX MAY BE REQUIRED AS SPECIFIED BY THE ENGINEER.
- CURB STOP TO TERMINATE 24" ABOVE GROUND AT R/W LINE.
- REUSE CURB STOPS = 1" / WATER CURB STOPS = 3/4"
- TUBING TO BE YARDLEY 3406 OR EQUAL.
- SADDLES 2" - 3" TO BE BRASS FULL CIRCLE TYPE.
- SADDLES 4" AND LARGER TO BE D.I. DUAL STRAP TYPE.
- CURB STOPS TO BE TIED TO MARKER STAKE.
- SADDLE MAY BE INSTALLED AT ANGLE (WITHIN 45° OF HORIZONTAL).
- MARKER STAKES PAINTED SAFETY BLUE FOR WATER, PURPLE FOR REUSE.

CREATED 02/24/03
REVISED

WATER AND REUSE LATERAL SERVICE 3/4" (DOUBLE - FAR SIDE) POLYETHYLENE TUBING

PASCO COUNTY UTILITIES

PROVIDED FOR INFORMATIONAL PURPOSES ONLY. NO MODIFICATIONS WITHOUT WRITTEN PCU APPROVAL

DETAIL 20

LINCKS & ASSOCIATES, INC.
5023 West Laurel Street
Tampa, Florida 33607
Tel (813) 289-0039
Fax (813) 287-0674
Lic. No. EB0004638
Engineers
Planners

DATE	01/26/2012
DESIGNED	DWD
DRAWN	DWM
CHECKED	DWD
JOB NO.	10087

The Villages of Trinity Lakes

Utility Details

REVISIONS

David W. Desilet
PE No. 24760

SHEET C35

NOTE:
PRECAST CONCRETE
SHALL ATTAIN A MINIMUM
COMPRESSIVE STRENGTH
OF 4,000 p.s.i. AT 28 DAYS.

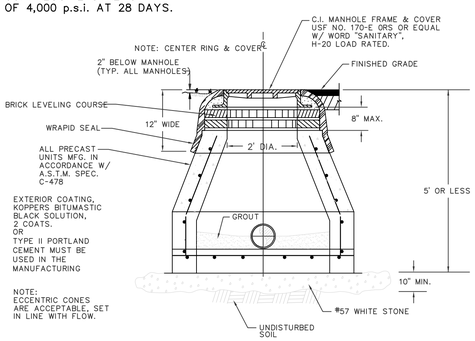

NOTE:
- A BEDDING OF CLASS I, CLASS II, OR CLASS III MATERIAL SHALL BE REQUIRED WHEN THE MANHOLE BOTTOM CANNOT BE INSTALLED ON UNDISTURBED SOIL OR IF THE NATIVE SOIL IS CLASS IV OR CLASS V MATERIAL.
- THIS TYPE OF CONSTRUCTION SHALL BE LIMITED TO DEPTHS OF (0-5) FEET.
- EXTERIOR COATING SHALL BE KOPPERS BITUMASTIC BLACK SOLUTION, 2 COATS.
- WRAPID SEAL MUST BE USED ON ALL JOINTS, CASTINGS AND RISER RINGS. WRAPID SEAL MUST BE USED IN ACCORDANCE WITH MANUFACTURER'S RECOMMENDATIONS.
- PASCO COUNTY SHALL HAVE THE OPTION OF SPECIFYING THE TYPE OF INTERIOR LINING TO BE INSTALLED FOR EACH INDIVIDUAL MANHOLE.
- PASCO COUNTY SHALL HAVE THE OPTION OF REQUIRING A NEGATIVE PRESSURE TEST PER ASTM C-1244
- LIFT HOLES MUST NOT PENETRATE THE WALLS

CREATED 02/24/03	MANHOLE SHALLOW CONSTRUCTION (CLOSED BOTTOM)	PROVIDED FOR INFORMATIONAL PURPOSES ONLY. NO MODIFICATIONS WITHOUT WRITTEN PCU APPROVAL
REVISED	PASCO COUNTY UTILITIES	DETAIL 43

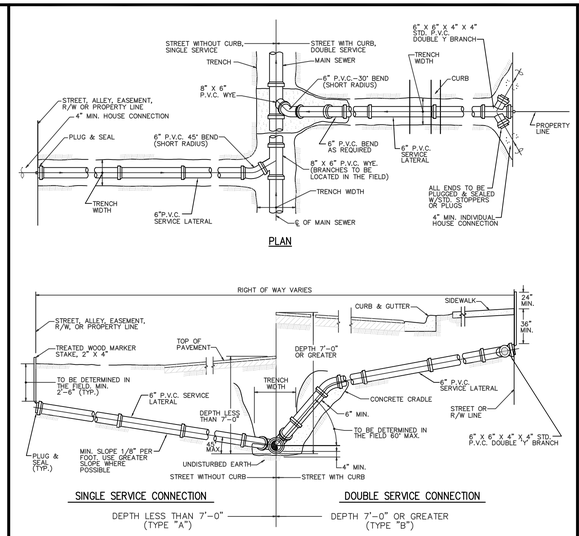

NOTE:
- CONTRACTOR SHALL MAKE, ON A CLEAN SET OF PLANS, THE FINAL STATIONING OR DISTANCE AND DIRECTION FROM MANHOLE OF EACH SERVICE LATERAL AND THEN GIVE TO ENGINEER FOR RECORD PURPOSES.
- PROVIDE 2" x 4" PRESSURE TREATED WOOD MARKER STAKE AT ALL SANITARY SERVICES (INCLUDE IN PIPE PRICE), TOP OF STAKE TO BE PAINTED WITH GREEN PAINT.
- THE MINIMUM DIAMETER OF ALL SERVICE LATERALS SHALL BE 6 INCHES.

CREATED 02/24/03	SEWER LATERAL CONNECTION	PROVIDED FOR INFORMATIONAL PURPOSES ONLY. NO MODIFICATIONS WITHOUT WRITTEN PCU APPROVAL
REVISED	PASCO COUNTY UTILITIES	DETAIL 44

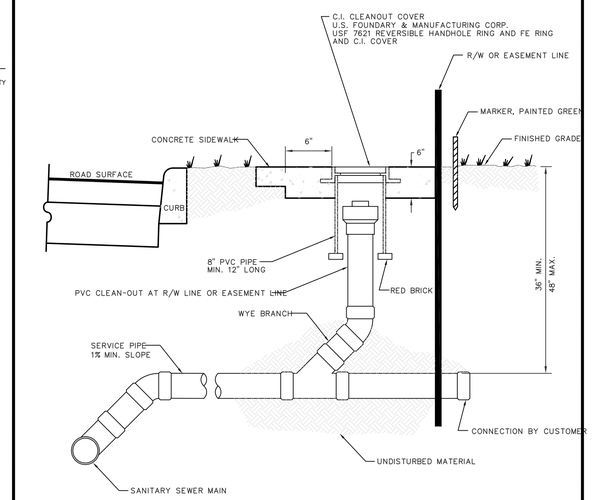

CREATED 02/24/03	SANITARY SEWER - SINGLE WYE CONNECTION AND TYPICAL CLEAN-OUT	PROVIDED FOR INFORMATIONAL PURPOSES ONLY. NO MODIFICATIONS WITHOUT WRITTEN PCU APPROVAL
REVISED	PASCO COUNTY UTILITIES	DETAIL 45

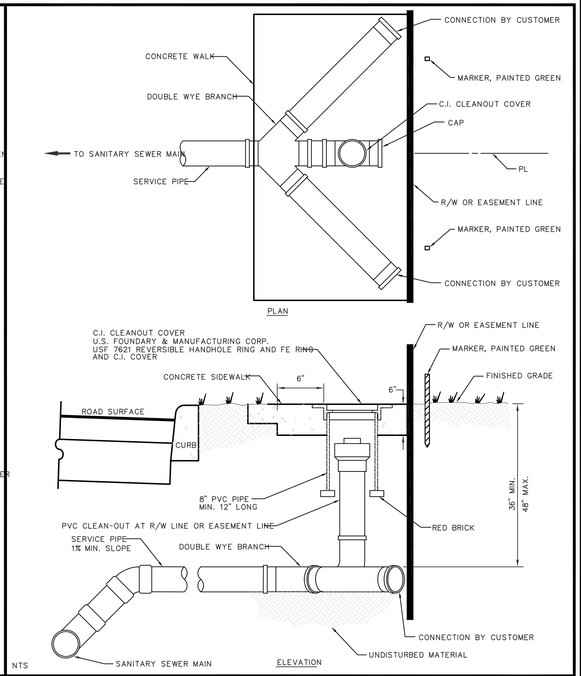

CREATED 02/24/03	SANITARY SEWER - DOUBLE WYE CONNECTION AND TYPICAL CLEAN-OUT	PROVIDED FOR INFORMATIONAL PURPOSES ONLY. NO MODIFICATIONS WITHOUT WRITTEN PCU APPROVAL
REVISED	PASCO COUNTY UTILITIES	DETAIL 46

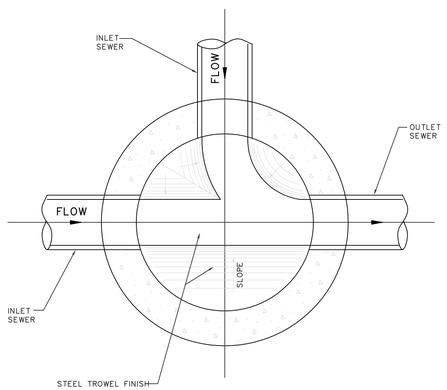

CREATED 02/24/03	STANDARD MANHOLE (BENCH AND INVERTS)	PROVIDED FOR INFORMATIONAL PURPOSES ONLY. NO MODIFICATIONS WITHOUT WRITTEN PCU APPROVAL
REVISED	PASCO COUNTY UTILITIES	DETAIL 39

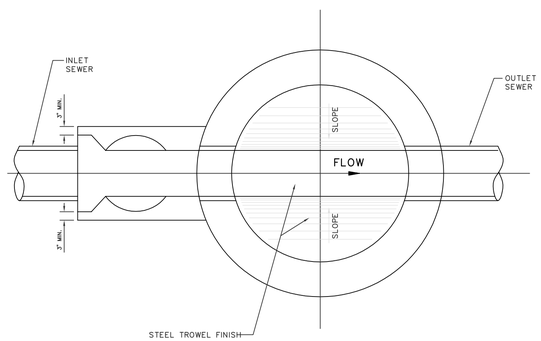

NOTE:
DROP MANHOLE TO BE USED WHEN THE DIFFERENCE BETWEEN INVERTS IS 2' OR MORE.

CREATED 02/24/03	DROP MANHOLE (BENCH AND INVERTS)	PROVIDED FOR INFORMATIONAL PURPOSES ONLY. NO MODIFICATIONS WITHOUT WRITTEN PCU APPROVAL
REVISED	PASCO COUNTY UTILITIES	DETAIL 40

NOTE:
PRECAST CONCRETE
SHALL ATTAIN A MINIMUM
COMPRESSIVE STRENGTH
OF 4,000 p.s.i. AT 28 DAYS.

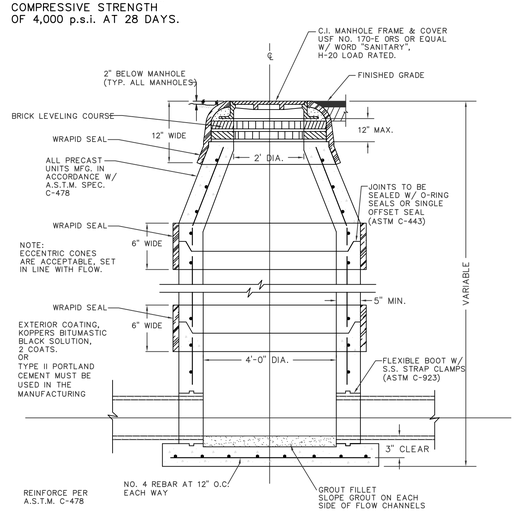

NOTE:
1. WRAPID SEAL MUST BE USED ON ALL JOINTS, CASTINGS AND RISER RINGS: ON ALL JOINTS ON AIR RELEASES, MANHOLES, GREASE/WATER, OIL/WATER SEPARATORS, AND WETWELLS.
2. WRAPID SEAL MUST BE USED IN ACCORDANCE WITH MANUFACTURES RECOMMENDATIONS.
3. PASCO COUNTY SHALL HAVE THE OPTION OF SPECIFYING THE TYPE OF INTERIOR LINING TO BE INSTALLED FOR EACH INDIVIDUAL MANHOLE.
4. PASCO COUNTY SHALL HAVE THE OPTION OF REQUIRING A NEGATIVE PRESSURE TEST PER ASTM C-1244
5. LIFT HOLES MUST NOT PENETRATE THE WALLS

CREATED 02/24/03	STANDARD MANHOLE	PROVIDED FOR INFORMATIONAL PURPOSES ONLY. NO MODIFICATIONS WITHOUT WRITTEN PCU APPROVAL
REVISED	PASCO COUNTY UTILITIES	DETAIL 41

NOTE:
ECCENTRIC CONES
ARE ACCEPTABLE, SET
IN LINE WITH FLOW.

EXTERIOR COATING,
KOPPERS BITUMASTIC
BLACK SOLUTION,
2 COATS.
OR
TYPE II PORTLAND
CEMENT MUST BE
USED IN THE
MANUFACTURING
PROCESS

NOTE:
PRECAST CONCRETE
SHALL ATTAIN A MINIMUM
COMPRESSIVE STRENGTH
OF 4,000 p.s.i. AT 28 DAYS.

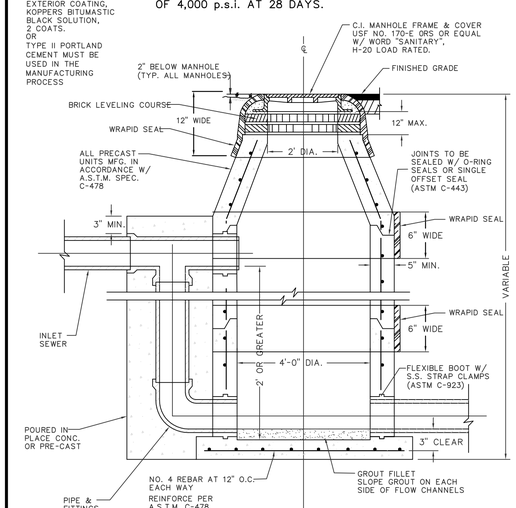

NOTE:
1. WRAPID SEAL MUST BE USED ON ALL JOINTS, CASTINGS AND RISER RINGS: ON ALL JOINTS ON AIR RELEASES, MANHOLES, GREASE/WATER, OIL/WATER SEPARATORS, AND WETWELLS.
2. WRAPID SEAL MUST BE USED IN ACCORDANCE WITH MANUFACTURES RECOMMENDATIONS.
3. PASCO COUNTY SHALL HAVE THE OPTION OF SPECIFYING THE TYPE OF INTERIOR LINING TO BE INSTALLED FOR EACH INDIVIDUAL MANHOLE.
4. PASCO COUNTY SHALL HAVE THE OPTION OF REQUIRING A NEGATIVE PRESSURE TEST PER ASTM C-1244
5. LIFT HOLES MUST NOT PENETRATE THE WALLS

CREATED 02/24/03	DROP MANHOLE	PROVIDED FOR INFORMATIONAL PURPOSES ONLY. NO MODIFICATIONS WITHOUT WRITTEN PCU APPROVAL
REVISED	PASCO COUNTY UTILITIES	DETAIL 42

LINCKS & ASSOCIATES, INC.
5023 West Laurel Street
Tampa, Florida 33607
Tel (813) 289-0039
Fax (813) 287-0674
Lic. No. EB0004638
Engineers
Planners

DATE	01/26/2012
DESIGNED	DWD
DRAWN	DWM
CHECKED	DWD
JOB NO.	10087

The Villages of Trinity Lakes

Utility Details

REVISIONS

David W. Desilet
PE No. 24760

SHEET
C36

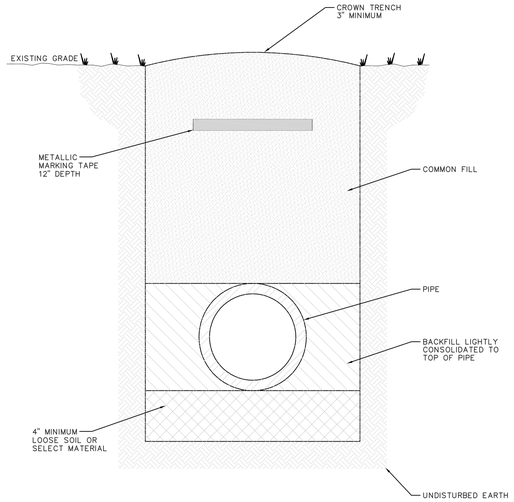

NOTES: -LOOSE SOIL OR SELECT MATERIAL IS NATIVE SOIL EXCAVATED FROM THE TRENCH FREE OF ROCKS AND FOREIGN MATERIAL.
-COMMON FILL TO BE PLACED AND COMPACTED IN 12" LAYERS. ROLLING EQUIPMENT SHALL NOT BE USED FOR COMPACTION UNTIL A MINIMUM OF 18" OF COMMON FILL HAS BEEN PLACED AND COMPACTED OVER THE PIPE. THREE FEET OF FILL SHALL BE PLACED BEFORE A HYDROHAMMER MAY BE USED FOR COMPACTION.

NTS

CREATED 02/24/03
REVISED

PIPE LAYING CONDITIONS
STANDARD UNPAVED AREAS

PROVIDED FOR INFORMATIONAL PURPOSES ONLY. NO MODIFICATIONS WITHOUT WRITTEN PCU APPROVAL

PASCO COUNTY UTILITIES — DETAIL 35

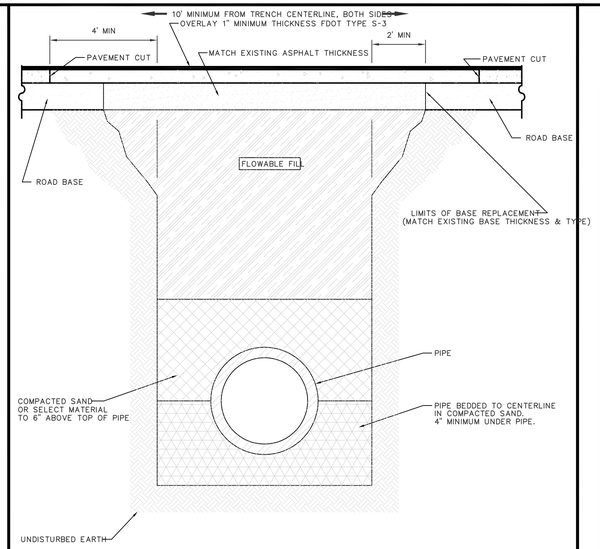

NOTE: -SELECT MATERIAL IS NATIVE SOIL EXCAVATED FROM THE TRENCH FREE OF ROCKS AND FOREIGN MATERIAL.
-COMPACTION TO TOP OF PILE IS TO BE APPROXIMATELY 90% STANDARD PROCTOR, AASHTO T-99.
-EXISTING CONCRETE/ASPHALT PAVEMENT SURFACE AND BASE TO BE CUT SQUARE WITH CONCRETE SAW.

NTS

CREATED 03/06/03
REVISED

PIPE LAYING CONDITIONS
FLOWABLE FILL BACKFILL
STANDARD EXISTING PAVED AREAS & ROADWAYS

PROVIDED FOR INFORMATIONAL PURPOSES ONLY. NO MODIFICATIONS WITHOUT WRITTEN PCU APPROVAL

PASCO COUNTY UTILITIES — DETAIL 36

PIPE RESTRAINT LENGTHS IN FEET
COMMON FITTINGS

WATER MAINS - TEST PRESSURE 150 PSI

PIPE SIZE	FITTING TYPE 11-1/4°	22-1/2°	45°	90°	DEAD END
4"	2'	4'	8'	20'	45'
6"	3'	6'	12'	28'	63'
8"	4'	7'	15'	36'	82'
10"	4'	9'	18'	43'	98'
12"	5'	10'	21'	50'	116'
16"	6'	13'	26'	63'	148'
20"	7'	15'	31'	76'	179'
24"	9'	17'	36'	87'	208'

FORCE MAINS - TEST PRESSURE 100 PSI

PIPE SIZE	FITTING TYPE 11-1/4°	22-1/2°	45°	90°	DEAD END
4"	1'	3'	6'	13'	30'
6"	2'	4'	8'	19'	42'
8"	2'	5'	10'	24'	55'
10"	3'	6'	12'	29'	66'
12"	3'	7'	14'	34'	77'
16"	4'	8'	18'	42'	99'
20"	5'	10'	21'	50'	119'
24"	6'	11'	24'	58'	139'

RESTRAINT LENGTHS ARE MEASURED FROM THE CENTER LINE OF THE FITTING ALONG THE PIPE IN BOTH DIRECTIONS (EXCEPT DEAD ENDS).

CREATED 02/24/03
REVISED

RESTRAINED JOINT TABLE
COMMON FITTINGS

PROVIDED FOR INFORMATIONAL PURPOSES ONLY. NO MODIFICATIONS WITHOUT WRITTEN PCU APPROVAL

PASCO COUNTY UTILITIES — DETAIL 31

PIPE RESTRAINT LENGTHS IN FEET
TEES (BRANCH SIDE)

WATER MAINS - TEST PRESSURE 150 PSI

RUN SIZE	BRANCH SIZE 3"	4"	6"	8"	10"	12"	16"	20"	24"
3"	6'	14'	30'	—	—	—	—	—	—
4"	2'	11'	28'	44'	—	—	—	—	—
6"	1'	2'	22'	40'	52'	—	—	—	—
8"	1'	1'	16'	35'	48'	62'	—	—	—
10"	1'	1'	10'	30'	44'	58'	83'	—	—
12"	1'	1'	3'	25'	40'	55'	80'	103'	—
16"	1'	1'	1'	14'	31'	48'	75'	98'	119'
20"	1'	1'	1'	2'	22'	40'	69'	94'	116'
24"	1'	1'	1'	1'	11'	31'	63'	89'	111'

RESTRAINT LENGTHS ARE MEASURED FROM THE CENTER LINE OF THE TEE ALONG THE BRANCH FOR THE DISTANCE INDICATED. A MINIMUM OF 5 FEET OF RESTRAINED PIPE MUST BE INSTALLED ON BOTH RUNS OF THE TEE. MEGALUG TYPE RESTRAINERS ARE REQUIRED ON ALL JOINTS.

CREATED 02/24/03
REVISED

RESTRAINED JOINT TABLE
TEES (BRANCH SIDE)

PROVIDED FOR INFORMATIONAL PURPOSES ONLY. NO MODIFICATIONS WITHOUT WRITTEN PCU APPROVAL

PASCO COUNTY UTILITIES — DETAIL 32

NOTE: ALL VALVE BOXES SHALL INCLUDE CONCRETE PAD W/ I.D. TAG

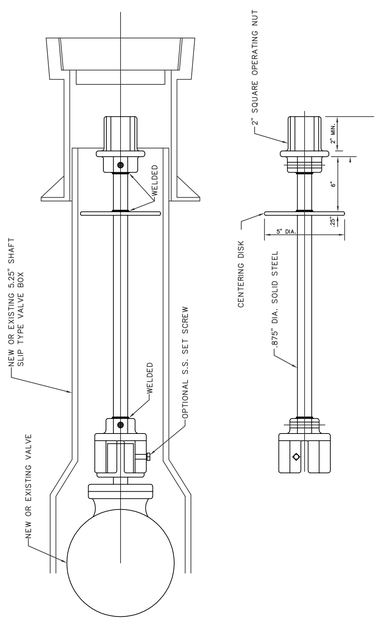

CREATED 02/24/03
REVISED

VALVE EXTENSION RODS

PROVIDED FOR INFORMATIONAL PURPOSES ONLY. NO MODIFICATIONS WITHOUT WRITTEN PCU APPROVAL

PASCO COUNTY UTILITIES — DETAIL 29

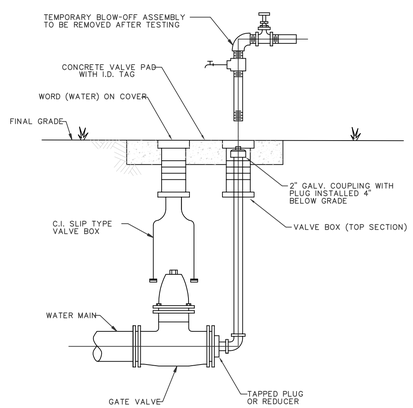

NOTES:
- MECHANICAL JOINTS/UNDERGROUND PIPING SHALL BE RESTRAINED AS SPECIFIED IN JOINT RESTRAINT TABLE (DETAIL 46)
- VALVE EXTENSION ROD SHALL BE UTILIZED, AS NECESSARY, SO THAT VALVE OPERATING NUT IS A MAXIMUM OF 3' BELOW GRADE.

CREATED 02/24/03
REVISED

PERMANENT
BLOW-OFF DETAIL

PROVIDED FOR INFORMATIONAL PURPOSES ONLY. NO MODIFICATIONS WITHOUT WRITTEN PCU APPROVAL

PASCO COUNTY UTILITIES — DETAIL 28

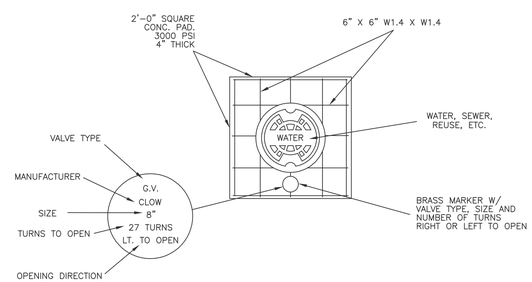

TYPICAL CONCRETE VALVE PAD

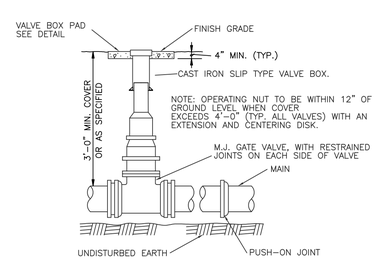

CREATED 02/24/03
REVISED

VALVE BOX DETAIL
SLIP TYPE

PROVIDED FOR INFORMATIONAL PURPOSES ONLY. NO MODIFICATIONS WITHOUT WRITTEN PCU APPROVAL

PASCO COUNTY UTILITIES — DETAIL 30

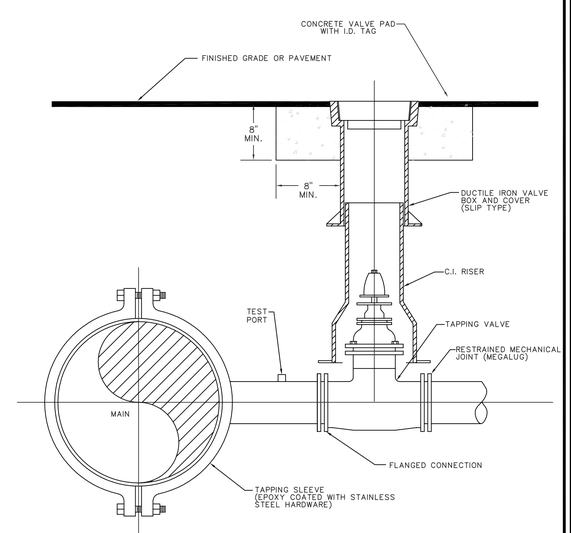

ELEVATION

NOTES:
- SADDLE CONNECTION WILL BE TESTED TO 150 PSI PRIOR TO TAPPING MAIN.
- MECHANICAL JOINTS/UNDERGROUND PIPING SHALL BE RESTRAINED AS SPECIFIED BY COUNTY/ENGINEER.
- VALVE EXTENSION ROD SHALL BE UTILIZED, AS NECESSARY, SO THAT VALVE OPERATING NUT IS A MAXIMUM OF 3' BELOW GRADE.

CREATED 02/24/03
REVISED

WATER, REUSE, AND FORCE MAIN
TAPPING DETAIL W/ VALVE LOCATION

PROVIDED FOR INFORMATIONAL PURPOSES ONLY. NO MODIFICATIONS WITHOUT WRITTEN PCU APPROVAL

PASCO COUNTY UTILITIES — DETAIL 37

LINCKS & ASSOCIATES, INC.
Engineers
Planners
5023 West Laurel Street
Tampa, Florida 33607
Tel (813) 289-0039
Fax (813) 287-0574
Lic. No. EB0004638

DATE	01/26/2012
DESIGNED	DWD
DRAWN	DWM
CHECKED	DWD
JOB NO.	10087

The Villages of Trinity Lakes
Utility Details

REVISIONS

David W. Desilet
PE No. 24760

SHEET C37

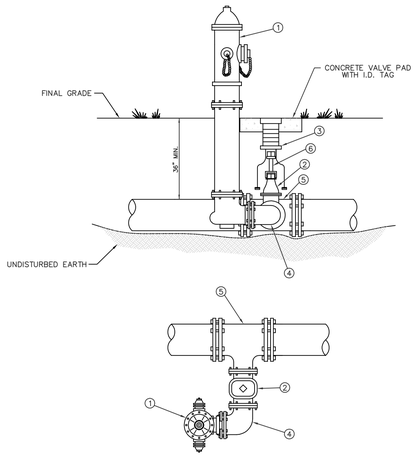

MATERIALS		
ITEM	QUANT.	DESCRIPTION
1	1	HYDRANT, FIRE (5 1/4" VALVE MIN.), PAINTED YELLOW
2	1	6" VALVE, GATE, MJ RESILIENT WEDGE
3	1	BOX, VALVE SLIP TYPE
4	1	6" BEND, ANCHORING, D.I.
5	1	TEE, ANCHORING, MJ
6	*	VALVE EXTENSION ROD, AS NECESSARY (3' MAX. BELOW GRADE)

CREATED 02/24/03
REVISED

FIRE HYDRANT PARALLEL TO THE MAIN

PASCO COUNTY UTILITIES

PROVIDED FOR INFORMATIONAL PURPOSES ONLY. NO MODIFICATIONS WITHOUT WRITTEN PCU APPROVAL

DETAIL 25

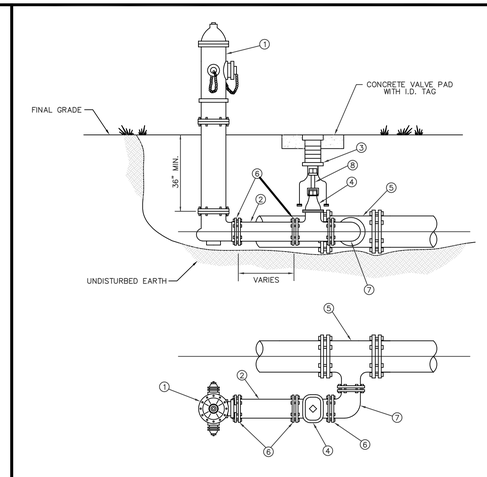

MATERIALS		
ITEM	QUANT.	DESCRIPTION
1	1	HYDRANT, FIRE (5 1/4" VALVE MIN.), PAINTED YELLOW
2	*	6" PIPE, P.V.C. (DR-18)
3	1	BOX, VALVE SLIP TYPE
4	1	6" VALVE, GATE, M.J. RESILIENT WEDGE
5	1	TEE, ANCHORING, M.J.
6	*	6" RESTRAINER GLAND (MEGALUG)
7	1	BEND, ANCHORING, D.I.
8	*	VALVE EXTENSION ROD, AS NECESSARY (3' MAX. BELOW GRADE)

CREATED 02/24/03
REVISED

FIRE HYDRANT PARALLEL TO THE MAIN

PASCO COUNTY UTILITIES

PROVIDED FOR INFORMATIONAL PURPOSES ONLY. NO MODIFICATIONS WITHOUT WRITTEN PCU APPROVAL

DETAIL 26

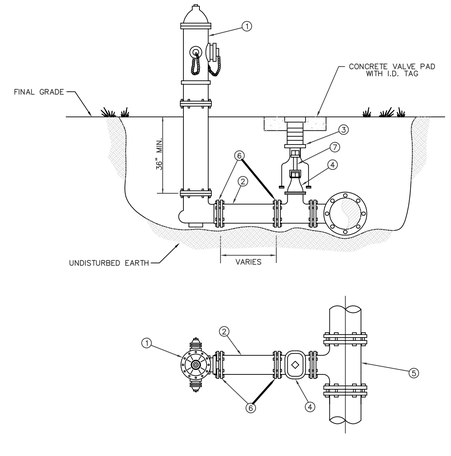

MATERIALS		
ITEM	QUANT.	DESCRIPTION
1	1	HYDRANT, FIRE (5 1/4" VALVE MIN.), PAINTED YELLOW
2	*	6" PIPE, P.V.C. (DR-18)
3	1	BOX, VALVE SLIP TYPE
4	1	6" VALVE, GATE, M.J. RESILIENT WEDGE
5	1	TEE, ANCHORING, M.J.
6	*	6" RESTRAINER GLAND (MEGALUG)
7	*	VALVE EXTENSION ROD, AS NECESSARY (3' MAX. BELOW GRADE)

CREATED 02/24/03
REVISED

FIRE HYDRANT PERPENDICULAR TO THE MAIN

PASCO COUNTY UTILITIES

PROVIDED FOR INFORMATIONAL PURPOSES ONLY. NO MODIFICATIONS WITHOUT WRITTEN PCU APPROVAL

DETAIL 27

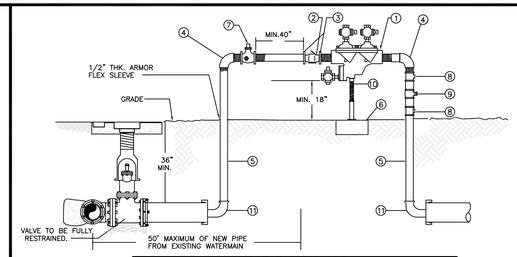

MATERIALS		
ITEM	QUANT.	DESCRIPTION
1	1	2" BACKFLOW PREVENTER ASSEMBLY, REDUCED PRESSURE ZONE
2	1	2" METER FURNISHED BY PASCO COUNTY UTILITIES
3	2	BRASS-METER FLANGES OR ADAPTORS
4	2	2" ELBOWS - GALV. 90°
5	2	2" RISER - GALV.
6	*	CONCRETE SLAB
7	1	2" VALVE - BRASS OR S.S.
8	2	TEE/ VALVES - BRASS OR S.S.
9	1	2" GATE VALVE - BRASS OR S.S.
10	1	PIPE STAND (SUPPORT)
11	2	M.J. CAP WITH 2" TAP

NOTE:
- CONTRACTOR/CUSTOMER SHALL APPLY AT PASCO COUNTY UTILITIES CUSTOMER SERVICE FOR TEMPORARY WATER SERVICE AT LEAST THREE DAYS PRIOR TO REQUIRED SERVICE DATE.
- THE METER WILL BE FURNISHED, INSTALLED AND INITIAL READING TAKEN BY PASCO COUNTY UTILITIES. ALL FITTINGS, PIPING, VALVES AND MATERIALS INCLUDING THE PASCO COUNTY APPROVED REDUCED PRESSURE BACKFLOW PREVENTION DEVICE SHALL BE FURNISHED AND INSTALLED BY THE CONTRACTOR/CUSTOMER.
- CONTRACTOR/CUSTOMER FURNISHED REDUCED PRESSURE BACKFLOW PREVENTION DEVICE MUST BE INSTALLED BEFORE THE METER IS INSTALLED BY PASCO COUNTY UTILITIES. THE APPROVED BACKFLOW PREVENTION DEVICE SHALL BE TESTED AND CERTIFIED BY PASCO COUNTY UTILITIES CERTIFIED BACKFLOW PREVENTION TECHNICIAN AT TIME OF METER INSTALLATION.
- CONTRACTOR/CUSTOMER SHALL PROTECT THE JUMPER/METER ASSEMBLY FROM DAMAGE.
- CONTRACTOR/CUSTOMER IS RESPONSIBLE FOR BACTERIOLOGICAL TESTING AFTER CONNECTION OF TEMPORARY WATER SERVICE.
- TEMPORARY CONSTRUCTION JUMPER/METER ASSEMBLY SHALL NOT BE REMOVED UNTIL SYSTEM IS ACCEPTED AND DEPARTMENT OF HEALTH CERTIFICATION AND CLEARANCE FOR SERVICE FORM HAS BEEN RECEIVED BY PASCO COUNTY UTILITIES.
- WHEN THE NEW SYSTEM IS ACCEPTED AND THE FINAL METER READING TAKEN BY PASCO COUNTY, THE TEMPORARY CONSTRUCTION JUMPER/METER ASSEMBLY MUST BE COMPLETELY REMOVED FROM M.J CAP TO M.J. CAP AND A NEW WATER MAIN IS TO BE CHLORINATED AND INSTALLED COMPLETING THE FINAL CONNECTION.
- BY APPLYING FOR SERVICE, CONTRACTOR/CUSTOMER AGREES TO TAKE WATER SERVICE FROM PASCO COUNTY UTILITIES IN ACCORDANCE WITH THE APPROPRIATE RATE SCHEDULE AND IN ACCORDANCE WITH PASCO COUNTY UTILITIES RULES AND REGULATION.

CREATED 11/18/05
REVISED 05/30/06

TEMPORARY CONSTRUCTION WATER SERVICE

PASCO COUNTY UTILITIES

PROVIDED FOR INFORMATIONAL PURPOSES ONLY. NO MODIFICATIONS WITHOUT WRITTEN PCU APPROVAL

DETAIL 01

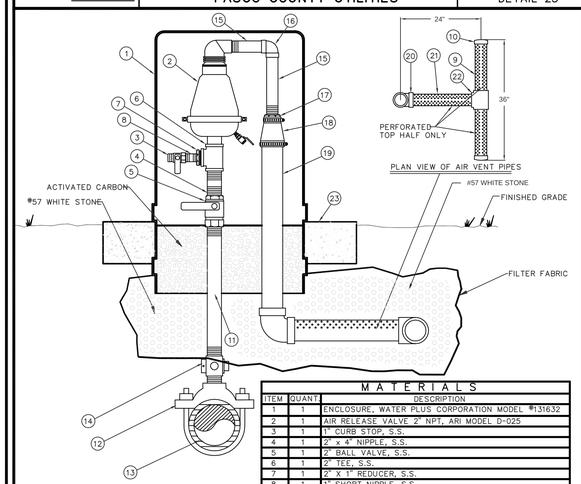

MATERIALS		
ITEM	QUANT.	DESCRIPTION
1	1	ENCLOSURE, WATER PLUS CORPORATION MODEL #131632
2	1	AIR RELEASE VALVE 2" NPT, ARI MODEL D-025
3	1	1" CURB STOP, S.S.
4	1	2" x 4" NIPPLE, S.S.
5	1	2" BALL VALVE, S.S.
6	1	2" TEE, S.S.
7	1	2" X 1" REDUCER, S.S.
8	1	1" SHORT NIPPLE, S.S.
9	2	3" PIPE, PVC, LENGTH AS SHOWN,PERFORATED TOP HALF ONLY
10	2	3" CAP, PVC
11	1	2" PIPE, S.S. LENGTH AS REQUIRED
12	1	2" DOUBLE STRAP TAPPING SADDLE, D.I.
13	1	4" & LARGER PIPE, D.I. OR PVC (DR-18)
14	1	2" CORPORATION BRASS
15	2	1-1/2" PIPE, PVC, LENGTH AS REQUIRED
16	1	1-1/2" x 90° ELBOW, PVC
17	1	2" X 1-1/2" REDUCER, PVC
18	1	3" X 2" FLEX COUPLING
19	1	3" PIPE, PVC, LENGTH AS REQUIRED
20	1	3" x 90° ELBOW, PVC
21	1	3" PIPE, PVC, LENGTH AS SHOWN,PERFORATED TOP HALF ONLY
22	1	3" TEE, PVC
23	1	CONCRETE SLAB AROUND ENCLOSURE

NOTE:
ENCLOSURE SHALL BE COLOR CODED GREEN

CREATED 02/24/03
REVISED

SEWER AIR RELEASE VALVE ASSEMBLY WITH ODOR CONTROL SYSTEM (VERTICAL PIPE LAYOUT)

PASCO COUNTY UTILITIES

PROVIDED FOR INFORMATIONAL PURPOSES ONLY. NO MODIFICATIONS WITHOUT WRITTEN PCU APPROVAL

DETAIL 06

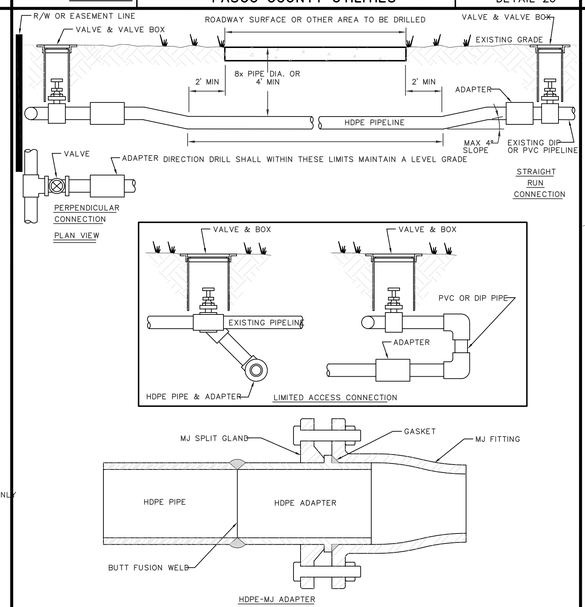

NOTE: -DIRECTIONAL DRILLS SHALL BE COMPLETED USING DR11 HDPE PIPE, DUCTILE IRON SIZE.
- ALL DIRECTIONAL DRILLS SHALL BE AT A DEPTH OF 8x PIPE DIAMETER BELOW THE ROADWAY SURFACE OR 4' WHICHEVER IS GREATER.
-ALL HDPE MUST BE COLOR CODED (SAFETY BLUE-WATER, SAFETY GREEN FOR SEWER AND PANTONE PURPLE FOR RECLAIMED WATER); BUTT FUSION WELDED; AND CONNECTED WITH HDPE-MJ ADAPTERS.

CREATED 03/06/03
REVISED

DIRECTIONAL DRILLING

PASCO COUNTY UTILITIES

PROVIDED FOR INFORMATIONAL PURPOSES ONLY. NO MODIFICATIONS WITHOUT WRITTEN PCU APPROVAL

DETAIL 34

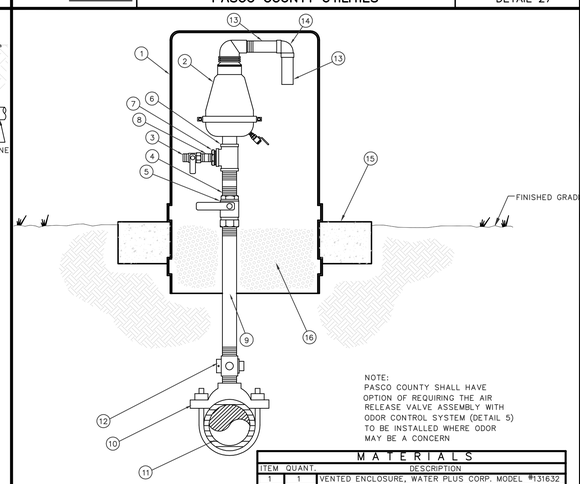

NOTE:
PASCO COUNTY SHALL HAVE OPTION OF REQUIRING THE AIR RELEASE VALVE ASSEMBLY WITH ODOR CONTROL SYSTEM (DETAIL 5) TO BE INSTALLED WHERE ODOR MAY BE A CONCERN

NOTE:

VENTED ENCLOSURE TO BE COLOR CODED AS FOLLOWS:

WATER MAIN - BLUE
FORCE MAIN - GREEN
REUSE MAIN - PURPLE

MATERIALS		
ITEM	QUANT.	DESCRIPTION
1	1	VENTED ENCLOSURE, WATER PLUS CORP. MODEL #131632
2	1	AIR RELEASE VALVE 2" NPT (SEE BELOW)
		SEWER AIR RELEASE VALVES SHALL BE ARI MODEL D-025
		WATER AIR RELEASE VALVES SHALL BE VALMATIC OR EQUAL
3	1	1" CURB STOP, S.S.
4	1	2" x 4" NIPPLE, S.S.
5	1	2" BALL VALVE, S.S.
6	1	2" TEE, S.S.
7	1	2" X 1" REDUCER, S.S.
8	1	1" SHORT NIPPLE, S.S.
9	1	2" PIPE, S.S. LENGTH AS REQUIRED
10	1	2" DOUBLE STRAP TAPPING SADDLE, S.S.
11	1	4" & LARGER PIPE, D.I. OR PVC (DR-18)
12	1	2" CORPORATION BRASS
13	2	1-1/2" PIPE, PVC, LENGTH AS REQUIRED
14	1	1-1/2" x 90° ELBOW, PVC
15	1	CONCRETE SLAB AROUND ENCLOSURE
16	1	#57 WHITE ROCK

CREATED 02/24/03
REVISED

STANDARD AIR RELEASE VALVE ASSEMBLY (VERTICAL PIPE LAYOUT)

PASCO COUNTY UTILITIES

PROVIDED FOR INFORMATIONAL PURPOSES ONLY. NO MODIFICATIONS WITHOUT WRITTEN PCU APPROVAL

DETAIL 4

LINCKS & ASSOCIATES, INC.
5023 West Laurel Street
Tampa, Florida 33607
Tel (813) 289-0039
Fax (813) 287-0574
Lic. No. EB0004638
Engineers
Planners

DATE	01/26/2012
DESIGNED	DWD
DRAWN	DWM
CHECKED	DWD
JOB NO.	10087

The Villages of Trinity Lakes

Utility Details

REVISIONS

08/30/2012	Added Standard Air Release Valve Detail (#4), Removed Offset ARV Detail #8

David W. Desilet
PE No. 24760

SHEET C38

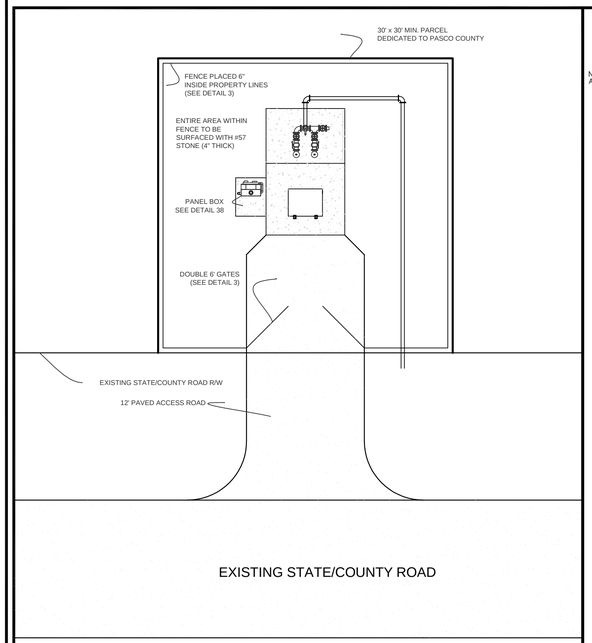

CREATED 02/24/03	PUMP STATION (DUPLEX) SITE PLAN & ACCESS	PROVIDED FOR INFORMATIONAL PURPOSES ONLY. NO MODIFICATIONS WITHOUT WRITTEN PCU APPROVAL
REVISED	PASCO COUNTY UTILITIES	DETAIL 47

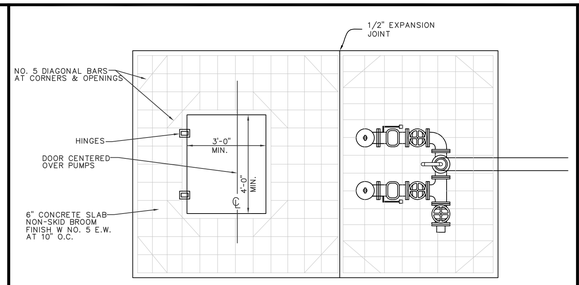

SLAB PLAN VIEW
LIFT STATION & PIPING

NOTE: PUMP OUT ASSEMBLY CAN BE PLACED ON EITHER SIDE TO BEST ACCOMMODATE PROPOSED LAYOUT

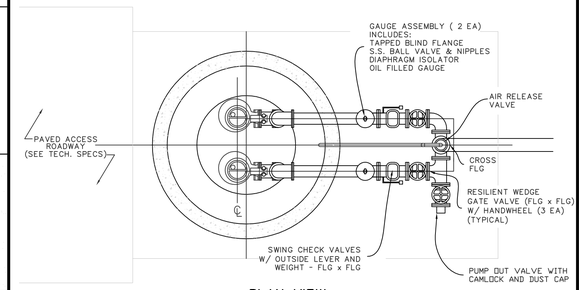

PLAN VIEW
LIFT STATION & PIPING

CREATED 02/24/03	PUMP STATION SLAB & PIPING PLAN	PROVIDED FOR INFORMATIONAL PURPOSES ONLY. NO MODIFICATIONS WITHOUT WRITTEN PCU APPROVAL
REVISED	PASCO COUNTY UTILITIES	DETAIL 48

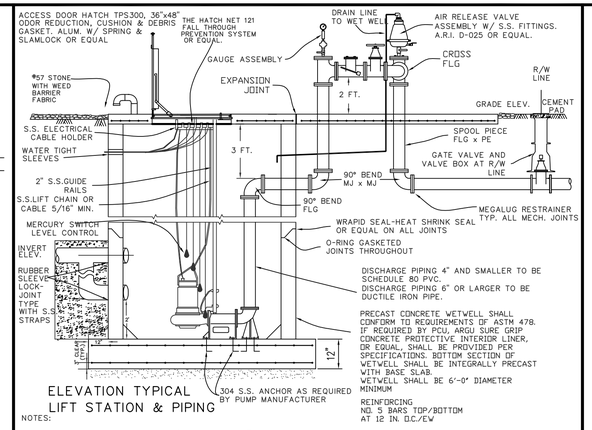

ELEVATION TYPICAL
LIFT STATION & PIPING

NOTES:

1. ALL PIPING WITHIN THE WETWELL (LARGER THAN 4") AND ALL ABOVE GROUND PIPING SHALL BE MANUFACTURED FLANGED PIPE. FIELD FABRICATED FLANGES (UNI-FLANGE OR MEGAFLANGE) WILL NOT BE PERMITTED.

2. ALL DUCTILE IRON PIPE AND FITTINGS SHALL BE PROVIDED WITH CERAMIC EPOXY INTERIOR LINING (PROTECTO 401). IN ADDITION, ALL PIPE & FITTINGS WITHIN THE WETWELL SHALL BE PROVIDED WITH POLYETHYLENE SHRINK WRAPPED EXTERIOR COATING.

3. ALL UNDERGROUND FITTINGS SHALL BE RESTRAINED MECHANICAL JOINT AND SHALL BE PROVIDED WITH PROTECTO 401 INTERIOR LINING.

4. IF LIFT CABLES ARE USED, LIFTING RINGS MUST BE PROVIDED EVERY 4 FT.

5. INDIVIDUAL WALL PENETRATION SLEEVES SHALL BE PROVIDED FOR EACH PUMP CABLE.

6. ALL HARDWARE (INCLUDING FLANGE BOLTS & NUTS) SHALL BE STAINLESS STEEL.

7. ALL ABOVE GROUND PIPING TO BE PAINTED SAFETY GREEN.

8. SLAB ELEVATION TO BE 12 IN. ABOVE C/L OF ROADWAY OR 12 IN. ABOVE 100 YEAR FLOOD PLAIN - WHICHEVER IS HIGHER.

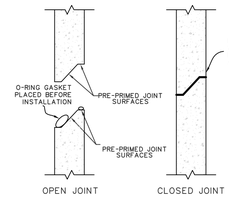

PRECAST JOINT DETAIL

CREATED 02/24/03	DUPLEX PUMP STATION ELEVATION & PIPING PROFILE	PROVIDED FOR INFORMATIONAL PURPOSES ONLY. NO MODIFICATIONS WITHOUT WRITTEN PCU APPROVAL
REVISED	PASCO COUNTY UTILITIES	DETAIL 49

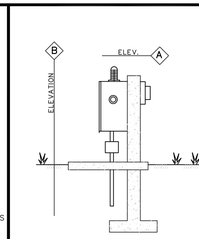

PANEL BOX ELEV.

NOTE:
POSITION PANEL BOX SO OPERATOR'S BACK IS NOT TO WET WELL WHILE FACING BOX

PANEL BOX TO BE LOCATED TO ALLOW UNOBSTRUCTED ACCESS TO WET WELL BY PAVED ACCESS ROAD

PANEL ELEVATION SHALL BE ABOVE 100-YEAR FLOOD ELEV. AND MUST BE SHOWN ON ALL PLANS

DUPLEXOR SHALL BE AN T.T.I. 6012 ANY ALTERNATE TYPE MUST BE SPECIFICALLY APPROVED BY PASCO COUNTY

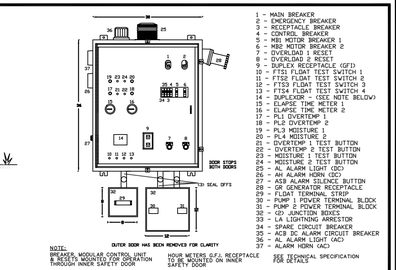

PANEL BOX COMPONENT LAY-OUT

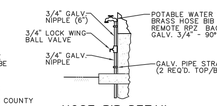

HOSE BIB DETAIL

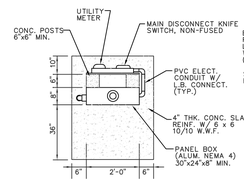

ELEVATION A

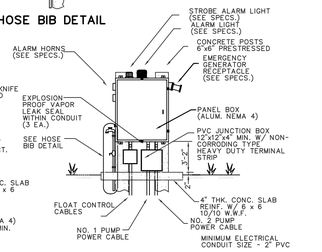

ELEVATION B

CREATED 02/24/03	STANDARD PUMP STATION (DUPLEX) PANEL BOX ELEVATION & COMPONENT LAY-OUT	PROVIDED FOR INFORMATIONAL PURPOSES ONLY. NO MODIFICATIONS WITHOUT WRITTEN PCU APPROVAL
REVISED	PASCO COUNTY UTILITIES	DETAIL 50

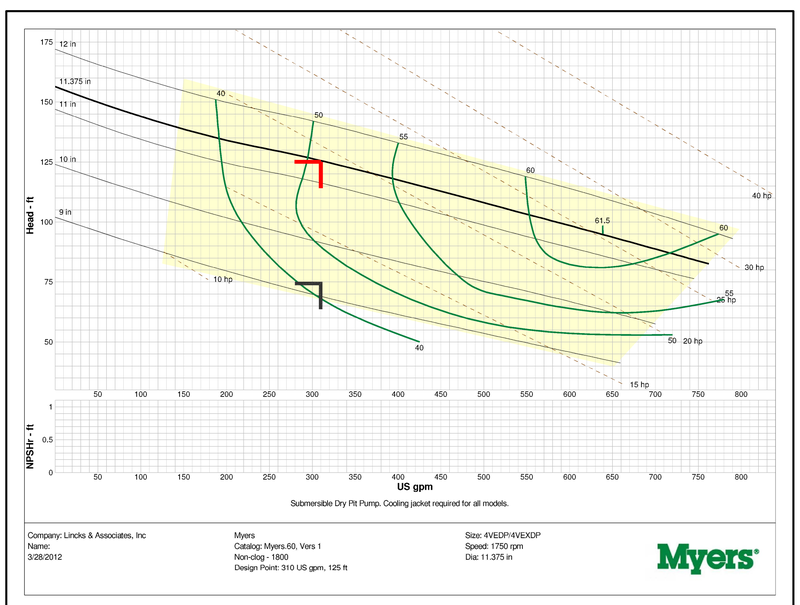

Submersible Dry Pit Pump. Cooling jacket required for all models.

Company: Lincks & Associates, Inc
Name:
3/28/2012

Myers
Catalog: Myers.60, Vers 1
Non-clog - 1800
Design Point: 310 US gpm, 125 ft

Size: 4VEDP\4VEXDP
Speed: 1750 rpm
Dia: 11.375 in

Myers®

Duplex Lift Station Design

Project Name: Trinity Lakes Sub Project Number: 10087
Lift Station: Date: 01/13/2011

	Acreage			SF	Standard 0.15	0	
Single Family Res			252	Lots	200	50,400	
Commercial	3.27		14500	SF	0.1	1,450	
Retail / Shopping Cen.	10.62		46000	SF	0.1	4,600	
Office	18.48		180000	SF	0.1	18,000	
Restaurants (3 Outpcl)	4.60	19,500	SF	780	55	42,900	
						117,350	117,350
Restaurant is estimated SF of 60% diner, of which there is 15 SF / Seat							
						GPM	GPD
ESTIMATED # OF HOURS IN AVERAGE DESIGN WORK DAY (Hours):					24		
TOTAL AVERAGE DAILY (ADF) FLOW:						81.5	117,350
EQUIVALENT RESIDENTIAL CONNECTION (ERC'S) @ 200 GPD/ERC:					587		
PEAKING FACTOR (Maximum Day Demand):					3.8	309.7	445,930

TOTAL DESIGN FLOW THIS STATION: 310

WETWELL SIZING CALCULATIONS

ENTER MINIMUM (T) CYCLE TIME (min):	15	[Max. 4 Starts / hour = 15 min]
DESIGN FLOW (gpm):	310.0	Peak Hour Demand
MINIMUM REQUIRED WET WELL STORAGE (Vs) VOLUME (gal):	581.3	(Vs) = (CYCLE TIME (T) x (½) x DESIGN FLOW) / 4
MINIMUM PUMPING TIME AT 0 INFLOW (min)	1.875	Pump (T) (min) = (Vs) / Design Flow
BASIS OF CALCULATION:	WET WELL (VS) VOLUME = (CYCLE TIME (T) x (½) x DESIGN FLOW) / 4	
	OPERATING RANGE (Hs) = [(Vs) / (Volume Per Foot of depth for a specific wet well diameter)]	

WET WELL DIAMETER (ft):	4	5	6	8
WET WELL VOLUME / FOOT OF DEPTH (gal)	94.00	146.88	211.51	376.01
(Hs) REQUIRED OPERATING RANGE.	6.18	3.95	2.75	1.54
WET WELL DIAMETER SELECTION BASED ON CALCULATED (Hs):				
ENTER SELECTED WET WELL INSIDE DIAMETER (ft):		6		
ENTER WET WELL GRAVITY INFLUENT PIPE DIAMETER (in):		8		
WET WELL CONTROL ELEVATIONS				
TOP ELEVATION OF WET WELL / LIFT STATION:			41.25	
ENTER LOWEST GRAVITY (INFLUENT PIPE) INVERT ELEVATION			19.27	
HIGH WATER AUDIBLE ALARM ELEVATION:		0.5	18.77	
LAG PUMP / BOTH PUMPS ON ELEVATION		0.5	18.27	
LEAD PUMP ON ELEVATION:		0.5	17.77	
SHUT-OFF / BOTH PUMPS OFF ELEVATION:		1.0	16.77	2.00
WET WELL INVERT / BOTTOM ELEVATION:		2.50	14.27	

Project Name: Trinity Lakes Sub Project Number: 10012
SYSTEM CURVE Date: 01/13/2011

MINOR LOSSES COEFFICIENT DETERMINATION — TOTAL DESIGN HEAD CALCULATIONS

TYPE	COEF.	STATION No.	STATION K TOTAL	FORCEMAIN No.	FORCEMAIN K TOTAL
1. BEND 90	0.9	4	3.6	3	2.7
2. BEND 45	0.5	0	0	0	0
3. CHECK VALVE	1	1	1	0	0
4. PLUG VALVE	1	1	1	1	1
5. TEE-BRANCH	1.8	1	1.8	0	0
6. BEND 22.5	0.5	0	0	0	0
7. REDUCER	0.3	0	0	0	0
8. OUTLET LOSS	0.4	0	0	0	0
9. WYE	0.04	0	0	0	0
10. INLET	1	1	1	0	0
11.	0	0	0	0	0
TOTALS			8.4		3.7

HEAD LOSS DETERMINATION

PIPE	WETWELL	FM
DESIGN FLOW (gpm):	310	310
FM DIAMETER (in)	4	6
VELOCITY (fps)	7.91	3.51
VELOCITY HEAD (ft)	0.97	0.19
MINOR LOSSES (ft)	8.17	0.71
PIPE LENGTH (ft)	24.48	1010
DESIGN "C" FACTOR	120	120
FRICTION LOSS (ft)	1.76	10.08
TOTAL FRICTION LOSSES (ft)	20.74	
Discharge Pipe Centerline Elevation @ P.O.C.	34.20	
Max. Pressure @ P.O.C. (In Feet): 38 PSI	87.80	
Min. Pressure @ P.O.C. (In Feet): 16 PSI	36.97	
Low Water Level (Both Pumps Off) Elevation:	16.77	
Total Static Head (Discharge Head - Low Water El.):	17.43	
MAX. TOTAL DESIGN HEAD (TDH):	125.97	
MIN. TOTAL DESIGN HEAD (TDH):	75.14	
DESIGN FLOW (gpm):	310.00	
Pump Myers 4VEDP / 4VEXDP, 1750 rpm, 11.125 imp, 30 hp		

LINCKS & ASSOCIATES, INC.
5023 West Laurel Street
Tampa, Florida 33607
Tel (813) 289-0039
Fax (813) 287-0574
Lic. No. EB0004638
Engineers
Planners

DATE	01/26/2012
DESIGNED	DWD
DRAWN	DWM
CHECKED	DWD
JOB NO.	10087

The Villages of Trinity Lakes

Utility Details

REVISIONS
09/14/2012 Added Thickness of Bottom Slab Per Ballast Calc's

David W. Desilet
PE No. 24760

SHEET C39

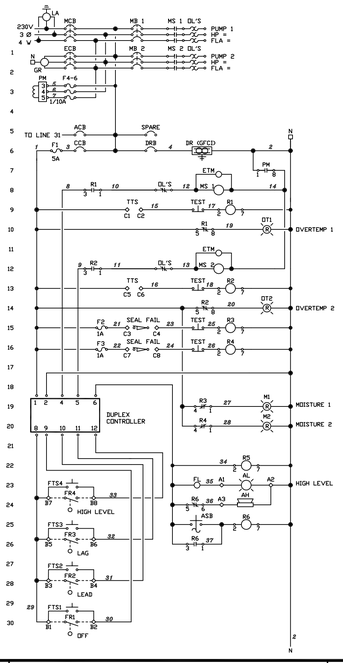

CREATED 02/24/03
REVISED

STANDARD PUMP STATION
WIRING DIAGRAM (1 OF 2)

PASCO COUNTY UTILITIES

PROVIDED FOR INFORMATIONAL PURPOSES ONLY.
NO MODIFICATIONS WITHOUT WRITTEN PCU APPROVAL

DETAIL 51

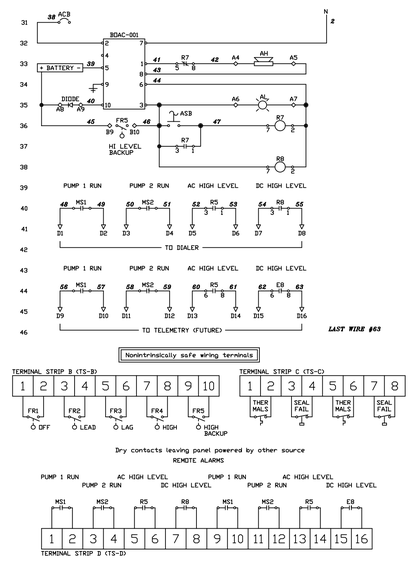

CREATED 02/24/03
REVISED

STANDARD PUMP STATION
WIRING DIAGRAM (2 OF 2)

PASCO COUNTY UTILITIES

PROVIDED FOR INFORMATIONAL PURPOSES ONLY.
NO MODIFICATIONS WITHOUT WRITTEN PCU APPROVAL

DETAIL 52

The Villages of Trinity Lakes

Utility Details

DATE	01/26/2012
DESIGNED	DWD
DRAWN	DWM
CHECKED	DWD
JOB NO.	10087

LINCKS & ASSOCIATES, INC.
5023 West Laurel Street
Tampa, Florida 33607
Tel (813) 289-0039
Fax (813) 287-0674
Lic. No. EB0004638
Engineers
Planners

REVISIONS

David W. Desilet
PE No. 24760

SHEET
C40

LEGEND

IW: INITIAL WATER ELEV.

SHW: SEASONAL HIGH WATER ELEV.

BASIN	POND	BOTTOM ELEV. A	IW ELEV. B	TOP OF BANK ELEV C	25 YR DHW EL. D	100 YR DHW EL. E	SHW ELEV.
163-A	E1	37.00	41.60	42.90	42.25	42.79	41.60
162-C	E2A	34.50	37.20	42.60	42.03	42.33	37.20
162-C	E2B	34.50	39.00	42.60	42.06	42.37	39.00
163-A	E3	37.00	41.60	43.00	42.48	42.82	41.60
163-A	E4	37.00	41.60	43.00	42.48	42.82	41.60
163-B	163-B2	37.00	39.00	43.10	42.60	42.84	39.00
163-B	163-B	37.00	39.00	43.10	42.57	42.83	39.00
161-C3	W7	34.50	37.50	40.00	38.78	39.88	37.50
161-C3	W6	34.50	36.30	39.35	38.53	39.33	36.30
161CF-TBS	W4	34.25	35.80	39.25	38.69	39.15	35.80
161CF-TBS	W5	34.25	35.00	39.25	38.45	39.17	35.00
161CF-TBS	W8	34.25	36.10	39.35	38.53	39.31	36.10
161CF-TBS	W9	34.50	34.00	39.25	38.28	38.91	34.00
161E-TBS-1	W2	35.00	36.00	39.25	38.70	39.23	36.00
161E-TBS-1	W3	35.00	37.10	39.25	38.69	39.19	37.10
161-E	161-E	33.50	38.70	39.60	39.10	39.21	38.70
161-F	161-F	30.70	38.70	39.60	39.08	39.19	38.70

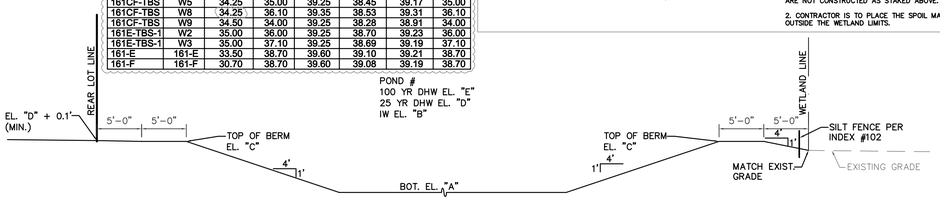

POND BOTTOM ELEVATION STATED ON PLANS IS THE APPROXIMATE AVERAGE BOTTOM ELEVATION. ACTUAL POND BOTTOM WILL VARY DUE TO ENCOUNTERED VARYING CLAY LEVELS AS SHOWN IN THE GEOTECHNICAL INVESTIGATION REPORT. IF SOIL TYPE CAN BE USED PER THE SOILS REPORT IT SHALL BE EXCAVATED FOR USE AS FILL ON THE PROJECT. IF LIMESTONE ENCOUNTERED EXCAVATION SHALL STOP AND 2' OF CLAY TO BE PLACED OVER THE LIMESTONE.

TYP. POND SECTION

SCALE: 1/8" = 1'

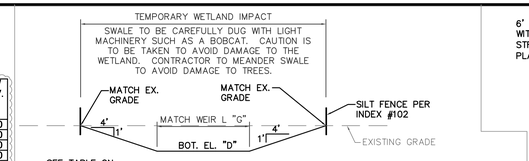

SEE TABLE ON WEIR DETAIL FOR "D" & "G"

NOTES:

1. CONTRACTOR TO CONSTRUCT SWALES UPON COMMENCEMENT OF CONSTRUCTION SO THAT THE DISTURBED AREA WILL RE-VEGETATE THROUGH NATURAL RECRUITMENT PRIOR TO THE TIME OF SWFWMD AS-BUILT REVIEW INSPECTION. CONTRACTOR WILL BE RESPONSIBLE FOR PLANTING THE DISTURBED AREAS IF THE SWALES ARE NOT CONSTRUCTED AS STAKED ABOVE.

2. CONTRACTOR IS TO PLACE THE SPOIL MATERIAL OUTSIDE THE WETLAND LIMITS.

WETLAND IMPACT SWALE

SCALE: 1/8" = 1'

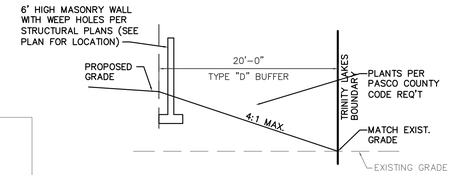

TYPE 'D' LANDSCAPE BUFFER

SCALE: 1/8" = 1'

Weir w/ No Baffle Chart										
Basin	Item	Desc.	Pond	Elev. "A"	Skimmer Top Elev. "B"	Skimmer Bot. Elev. "C"	Weir Elev. "D"	Endwall Top "E"	Top of Berm "F"	Weir Length "G"
163-A	163-A	Outfall Weir	E1	40.10	42.50	41.50	42.10	43.00	43.00	150
161CF-TBS	161-CFTBS-CC	Outfall Weir	W9	34.20	38.75	35.60	36.20	39.25	39.25	50
161-E	161-E-F	Outfall Weir	161-E	36.75	39.10	38.15	38.75	39.60	39.60	60
161-D	161-D-F	Outfall Weir	161-F	36.70	39.10	38.10	38.70	39.60	39.60	100
161-F	161-F-CA	Outfall Weir	161-F	36.70	39.10	38.10	38.70	39.60	39.60	50
161-F	161-F-CB	Outfall Weir	161-F	36.60	39.10	38.00	38.60	39.60	39.60	10

NOTES:

1. COMPACT THE SUBGRADE TO A MINIMUM 98% STANDARD PROCTOR.
2. VERIFY THAT THE SUBGRADE STRENGTH. IF UNACCEPTABLE, THE SOILS SHALL BE REMOVED AND REPLACED AS DIRECTED BY THE ENGINEER.
3. WHERE REQUIRED, PROVIDE GEOTEXTILE SEPARATION LAYER.
4. WHERE REQUIRED, PLACE AND COMPACT SUBBASE MATERIAL TO A MINIMUM 95% STANDARD PROCTOR.
5. EXPAND THE GEOWEB SECTIONS INTO POSITION AND CONNECT THE END TO END AND INTERLEAF CONNECTIONS.
6. PLACE THE SPECIFIED INFILL MATERIAL TO

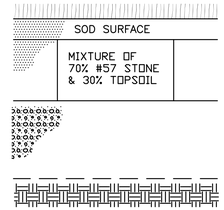

GEOWEB LOAD SUPPORT SYSTEM

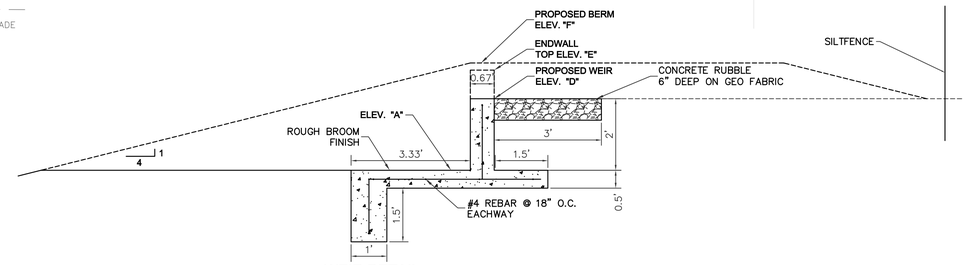

WEIR DETAIL

SCALE: 1" = 2'

Weir / Baffle Chart										
Basin	Item	Desc.	Pond	Elev. "A"	Skimmer Top Elev. "B"	Skimmer Bot. Elev. "C"	Weir Elev. "D"	Endwall Top "E"	Top of Berm "F"	Weir Length "G"
163-A	163A-S3	Sump Baffle	E1	40.10	42.50	41.50	41.60	43.00	43.00	5
163-A	163-A-E3	Outfall Weir	E3	40.20	42.50	41.60	42.20	43.00	43.00	150
163-A	163-A-S2	Sump Baffle	E4	39.60	42.50	41.00	41.60	43.00	43.00	10
162-C	E2A-162-C	Outfall Weir	E2A	39.60	42.10	41.00	41.60	42.60	42.60	20
162-C	E2B-162-C	Outfall Weir	E2B	39.60	42.10	41.00	41.60	42.60	42.60	20
161CF-TBS	161-CFTBS-W2	Outfall Weir	W4	34.27	38.75	35.67	38.27	39.25	39.25	10
161-E	161-E-D	Outfall Weir	161-E	36.70	39.10	38.10	38.70	39.60	39.60	150

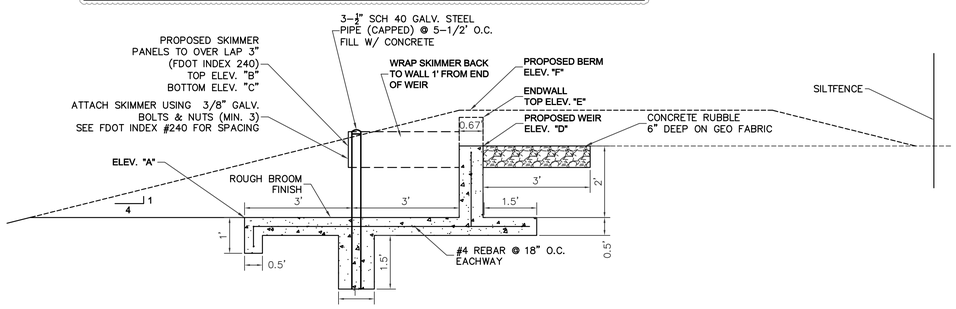

WEIR/SKIMMER DETAIL

SCALE: 1" = 2'

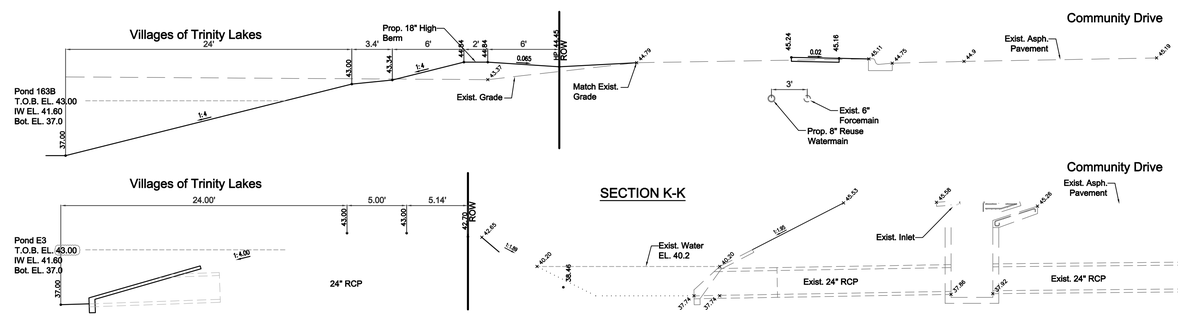

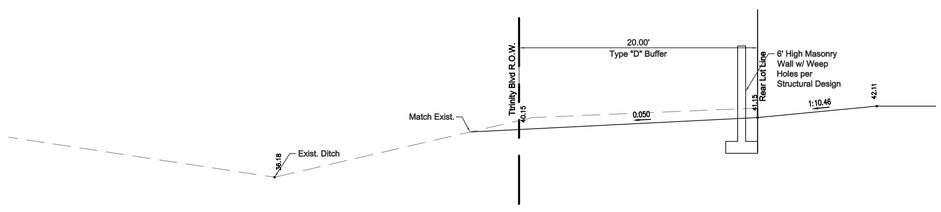

SECTION G-G

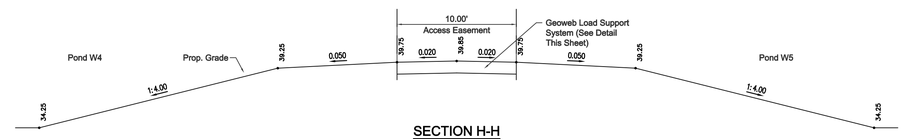

SECTION H-H

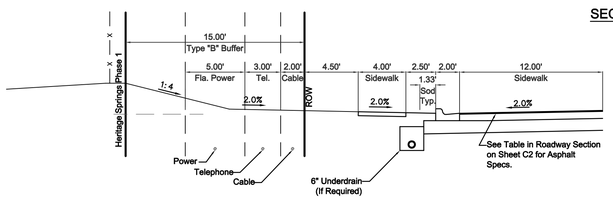

SECTION D-D

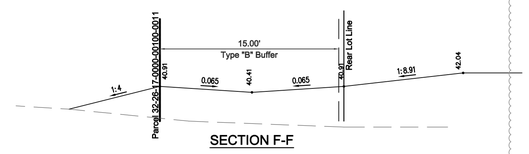

SECTION F-F

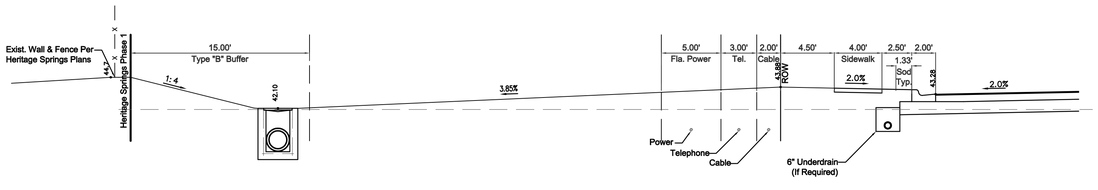

SECTION E-E

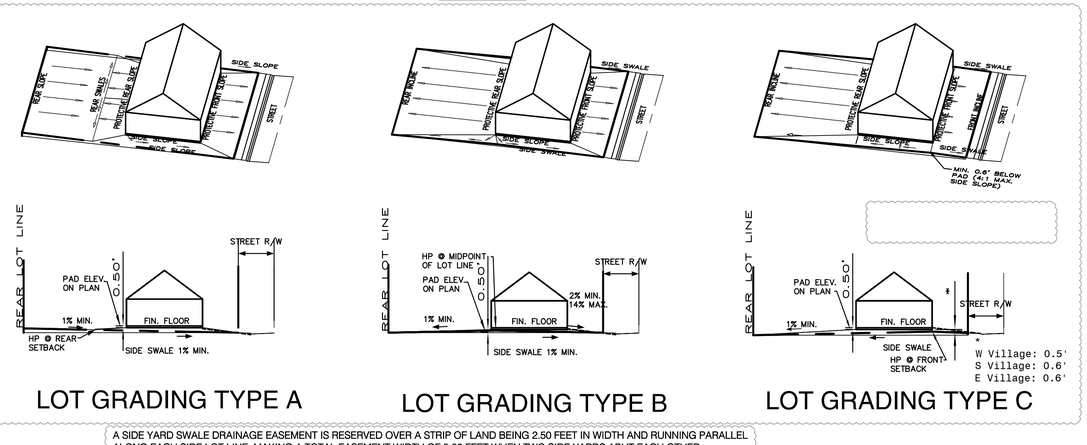

LOT GRADING TYPE A

LOT GRADING TYPE B

LOT GRADING TYPE C

A SIDE YARD SWALE DRAINAGE EASEMENT IS RESERVED OVER A STRIP OF LAND BEING 2.50 FEET IN WIDTH AND RUNNING PARALLEL ALONG EACH SIDE LOT LINE, MAKING A TOTAL EASEMENT WIDTH OF 5.00 FEET WHEN TWO SIDE YARDS ABUT EACH OTHER.

LINCKS & ASSOCIATES, INC.
5023 West Laurel Street
Tampa, Florida 33607
Tel (813) 289-0039
Fax (813) 287-0674
Lic. No. EB0004638
Engineers
Planners

DATE	01/26/2012
DESIGNED	DWD
DRAWN	DWM
CHECKED	DWD
JOB NO.	10087

The Villages of Trinity Lakes

Pond & Control Structure Details

REVISIONS

07/09/12	Added Driveway Note to Lot Grading Typs "C", Added HP's to All Grading Types
10/11/2012	Revised Pond Section Elevations, Weir Elevations For Changes To Drainage Model
01/02/2013	Rev. 7/09 Elev for 163-A-E1, Bot Elev for 161CF-TBS-W8, Weir Elev's A, C, & D for
	Weir's 161-D-F, 161-F-CA & 161-F-CB

David W. Desilet
PE No. 24760

SHEET C41

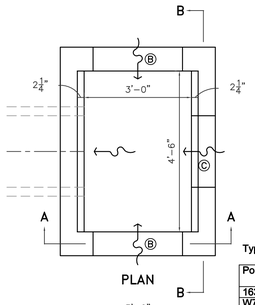

Type "E" Control Structure

Pond	Item	Top of Str. Elev. "A"	Weir Elev. "B"	Weir Elev. "C"
163-B2	163B2PondW7	42.97	42.00	42.50
W7	PondW7_W6	39.99	37.00	38.00

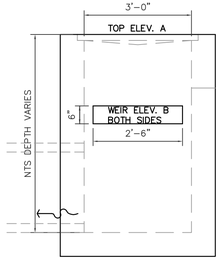

SECTION A

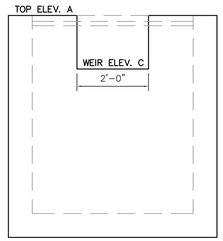

SECTION B

TYPE E
FDOT INDEX NO. 232

Recommended Maximum Pipe Size:
3'-0" Wall – 24" Pipe
4'-6" Wall – 36" Pipe

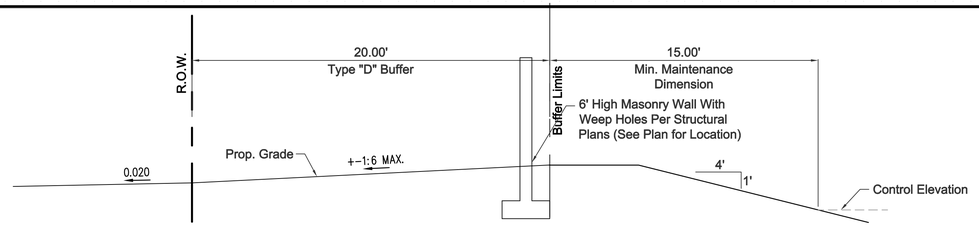

Typical Type D Buffer

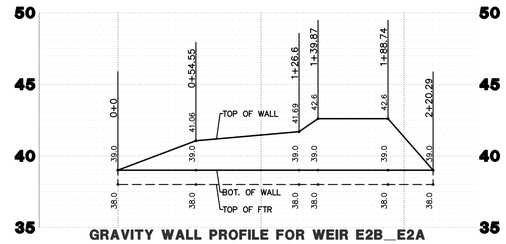

GRAVITY WALL PROFILE FOR WEIR E2B_E2A
SCALE: 1"=50'H, 1"=5' V

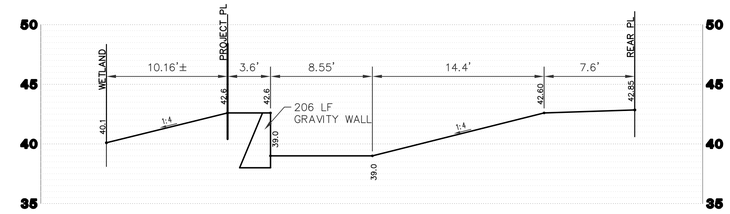

CROSS SECTION L-L BETWEEN
POND E2A & E2B (WEIR E2B_E2A)
SCALE: 1"=6'

Type "B" Buffer Table for Ponds

Pond	Top of Bank Elev. 'A'	DHW El. Elev. 'B'	Control Elev. 'C'	Min. Dim. 'D'	Dim. 'E'
161E-TBS-W3	39.25	38.75	37.10	12.90	8.10
161E	39.60	39.10	38.70	17.90	3.10
E2B	42.60	42.10	38.50	5.10	15.90

* Added 2' For Drainage Model DHW Elevation Deviation

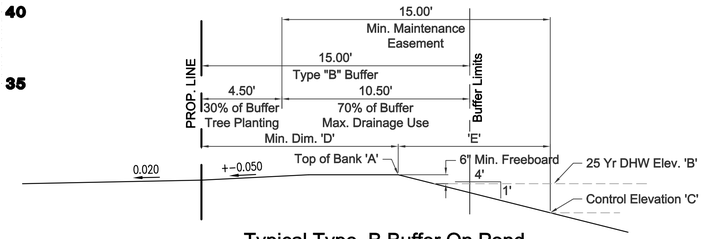

Typical Type B Buffer On Pond

		Length of Lot from HP SB	Depth in Feet @ HP SB	Length of Pad	Min. Slope	Depth in Feet @ LP SB	Side Slope Hor to 1	Contrib. Area SF	Contrib. Imp. Area SF	Mod. C
West Village	Type C Lot	90	0.50	75	0.01	1.25	4.00	4050	2625	0.756
South Village	Type A Lot	95	0.50	75	0.01	1.25	6.00	6050	3360	0.705
South Village	Type C Lot	90	0.60	75	0.01	1.35	5.56	4950	3000	0.733
East Village	Type A Lot	95	0.50	75	0.01	1.25	6.00	7150	4110	0.716
East Village	Type C Lot	90	0.60	75	0.01	1.35	5.56	5850	3750	0.753

Legend

HP = High Point
SB = Setback Point on PL

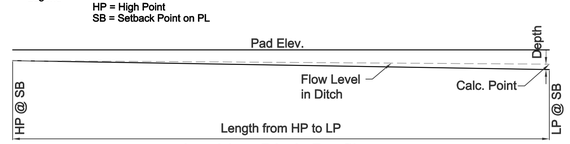

Lot Line Ditch Profile

Type "D" Buffer Table for Ponds

Pond	Top of Bank Elev. 'A'	DHW El. Elev. 'B'	Control Elev. 'C'	Min. Dim. 'D'	Dim. 'E'
163-B	43.10	42.60	39.00	6.60	14.40
163-A	43.00	42.50	41.60	17.40	3.60
161-C3-W6	39.35	38.85	36.30	10.80	10.20
161-C3-W7	40.00	39.50	37.50	13.00	8.00
161CF-TBS-W9	39.25	38.75	35.00	6.00	15.00
161CF-TBS-W4	39.25	38.75	35.80	9.20	11.80
161E-TBS-W3	39.25	38.75	37.10	14.40	6.60

* Added 2' For Drainage Model DHW Elevation Deviation

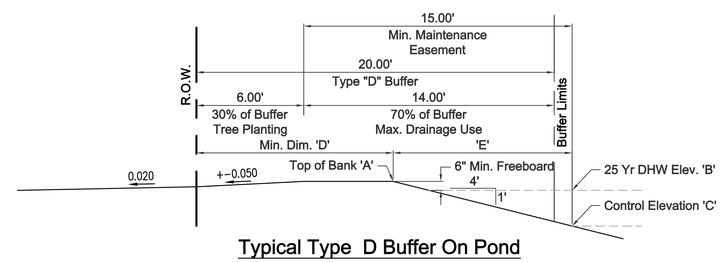

Typical Type D Buffer On Pond

For 10 yr Storm I (In/Hr) 6.50 N = .06 Q	W. Village Type C Lot	S. Village Type A Lot	S. Village Type C Lot	E. Village Type A Lot	E. Village Type C Lot	
	0.457	0.637	0.542	0.764	0.657	
Flow	0.460	0.640	0.542	0.764	0.660	cfs
Depth	0.379	0.367	0.355	0.392	0.382	ft
Area of Flow	0.574	0.808	0.700	0.922	0.812	sq ft
Wetted Perimeter	3.125	4.464	4.010	4.770	4.317	ft
Hydraulic Radius	0.184	0.181	0.175	0.193	0.188	ft
Average Velocity	0.801	0.792	0.774	0.828	0.813	fps
Top Width (T)	3.032	4.403	3.947	4.705	4.249	ft
Critical Depth	0.241	0.234	0.226	0.252	0.245	ft
Critical Velocity	1.972	1.942	1.908	2.012	1.984	fps
Critical Slope	0.111	0.109	0.111	0.107	0.108	ft/ft
Critical Top Width	1.932	2.812	2.514	3.019	2.720	ft
Max Shear Stress	0.236	0.229	0.221	0.245	0.238	lb/ft^2
Avg Shear Stress	0.115	0.113	0.109	0.121	0.117	lb/ft^2

Item	Description	W. Village Type "C"	S. Village Type "A"	S. Village Type "C"	E. Village Type "A"	E. Village Type "C"
A	Bottom Width	0'	0'	0'	0'	0'
B	Total Width	10'	15'	15'	15'	15'
C	Side Slope	4.0 : 1	6.0 : 1	5.56 : 1	6.0 : 1	5.56 : 1
D	Depth of Flow	0.379'	0.367'	0.355'	0.392'	0.382'
E	Total Depth	1.25'	1.25'	1.35'	1.25'	1.35'
s	Long. Slope	.01	.01	.01	.01	.01
Q	Flow in Section	0.46	0.64	0.54	0.76	0.66
T	Top Width	3.03	4.40	3.95	4.71	4.25

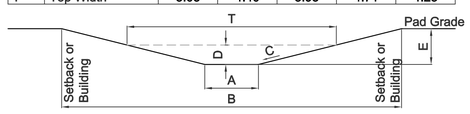

Ditch Section Calc.

Buffer Table for Rear Lot Lines Tree Planting

Pond	Top of Bank Elev. 'A'	DHW El. Elev. 'B'	Control Elev. 'C'	Min. Dim. 'D'	Dim. 'E'
163-B	43.10	42.60	39.00	5.60	15.40
163-A	43.00	42.50	41.60	16.40	4.60
162-C-E2A	42.60	42.10	38.50	5.60	15.40
162-C-E2B	42.60	42.10	37.20	0.40	20.60
161C3-W6	39.35	38.85	36.30	9.80	11.20
161C3-W7	40.00	39.50	37.50	12.00	9.00
161CF-TBS-W5	39.25	38.75	35.00	5.00	16.00
161CF-TBS-W4	39.25	38.75	35.80	8.20	12.80
161E-TBS-W3	39.25	38.75	37.10	13.40	7.60
161E-TBS-W2	39.25	38.75	36.00	9.00	12.00
161E	39.60	39.10	38.70	18.40	2.60
161-F	39.60	39.10	38.70	18.40	2.60

* Added 2' For Drainage Model DHW Elevation Deviation

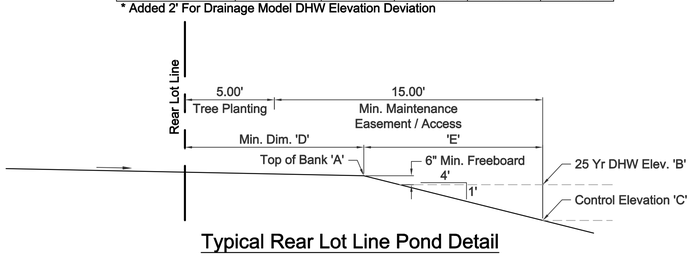

Typical Rear Lot Line Pond Detail

Type "D" Buffer Table for Ponds

Pond	Top of Bank Elev. 'A'	DHW El. Elev. 'B'	Control Elev. 'C'	Min. Dim. 'D'	Dim. 'E'
163-B	43.10	42.60	39.00	6.60	14.40
163-A	43.00	42.50	41.60	17.40	3.60
161-C3-W6	39.35	38.85	36.30	10.80	10.20
161-C3-W7	40.00	39.50	37.50	13.00	8.00
161CF-TBS-W9	39.25	38.75	35.00	6.00	15.00
161CF-TBS-W4	39.25	38.75	35.80	9.20	11.80
161E-TBS-W3	39.25	38.75	37.10	14.40	6.60

* Added 2' For Drainage Model DHW Elevation Deviation

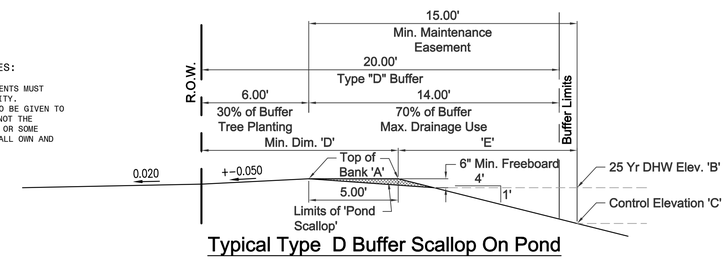

Typical Type D Buffer Scallop On Pond

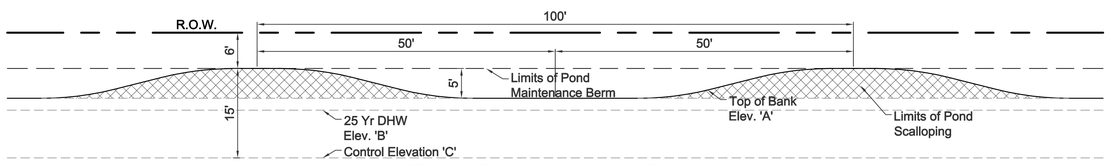

Typical Pond Scallop Plan Detail

DRAINAGE ACCESS EASEMENT NOTES:

1. THE ACCESS AND MAINTENANCE EASEMENTS MUST CONTAIN CLEAR OPERABLE ACCESSIBLITY.
2. THE EASEMENTS WILL BE REQUIRED TO BE GIVEN TO PASCO COUNTY, FOR THE RIGHT BUT NOT THE OBLIGATION TO MAINTAIN. THE HOA OR SOME OTHER ENTITY ACCEPTABLE TO PC SHALL OWN AND MAINTAIN THE EASEMENTS.

LINCKS & ASSOCIATES, INC.
Engineers
Planners
5023 West Laurel Street
Tampa, Florida 33607
Tel (813) 289-0039
Fax (813) 287-0674
Lic. No. EB0004638

DATE	01/26/2012
DESIGNED	DWD
DRAWN	DWM
CHECKED	DWD
JOB NO.	10087

The Villages of Trinity Lakes
Pond & Control Structure Details

REVISIONS

10/16/2012	Revised Pond Buffer Details To Reflect Changes to Drainage Model, Added Type E C.S. Detail
01/02/2013	Added Section L-L, Gravity Wall Profile
01/29/2013	Additional Detail added to Clarify Type E Control Structures

David W. Desilet
PE No. 24760

SHEET
C42

MATCH LINE A

SECS. 28,29,32,&33, TWP. 26S., RNG. 17E.

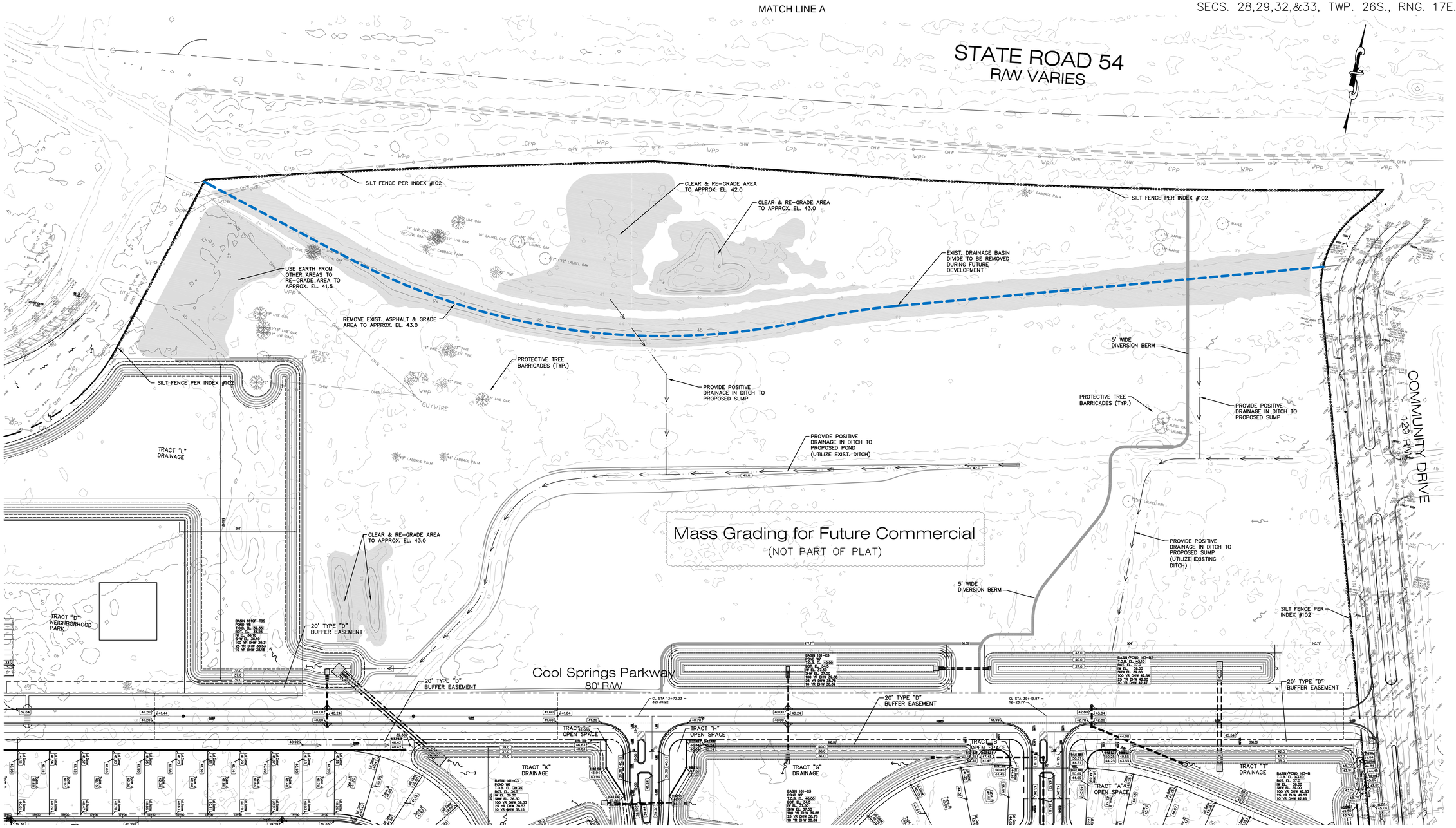

LEGEND

- PROPOSED CURB INLET
- PROPOSED MITERED END SECTION
- PROPOSED STORM MANHOLE
- PROPOSED STORM DRAIN
- DRAINAGE FLOW INDICATOR
- 11.40 — MATCH EXIST. GRADE ELEVATION
- 13.50 — PROPOSED GRADE ELEVATION (EDGE OF PAVEMENT UNLESS NOTED OTHERWISE)

POND NOTE:
POND BOTTOM ELEVATION STATED ON PLANS IS THE APPROXIMATE AVERAGE BOTTOM ELEVATION. ACTUAL POND BOTTOM WILL VARY DUE TO ENCOUNTERED VARYING CLAY LEVELS AS SHOWN IN THE GEOTECHNICAL INVESTIGATION REPORT. IF SOIL TYPE CAN BE USED PER THE SOILS REPORT IT SHALL BE EXCAVATED FOR USE AS FILL ON THE PROJECT. IF LIMESTONE ENCOUNTERED EXCAVATION SHALL STOP AND 2' OF CLAY TO BE PLACED OVER THE LIMESTONE.

NOTE: LOCATION OF UNDERGROUND UTILITIES SHOWN ON THESE PLANS SHALL NOT BE CONSIDERED TO BE EXACT FOR CONSTRUCTION PURPOSES.
48 HOURS BEFORE DIGGING
CALL
TOLL FREE
1-800-432-4770
SUNSHINE STATE ONE CALL CENTER

0' 80' 160'
SCALE: 1" = 80'

LINCKS & ASSOCIATES, INC.
5023 West Laurel Street
Tampa, Florida 33607
Tel (813) 289-0039
Fax (813) 287-0574
Lic. No. EB0004638
Engineers
Planners

DATE	01/26/2012
DESIGNED	
DRAWN	DWM
CHECKED	DWD
JOB NO.	10087

The Villages of Trinity Lakes
COMMERCIAL TRACT MASS GRADING PLAN

REVISIONS

08/30/2012	Reduced ttl. Added 5' wide diversion berm, ditches to provide positive drainage

David W. Desilet
PE No. 24760

SHEET
C43

DATE: 08/08/2000
TIME: 11:00am
XREF: NONE
SCALE: N/A
PLOT: 1=1 BLACKS
SPACE: PSPACE
PLOT SCALE: 1
PLOT CONFIG: LINCKS.PCP
PLOT STYLE: COLOR.CTB (LINCKS\CJ02020\)
FILE: LINCKS\PROTOTYPE.dwg DWG

E:\Work\10087_Trinity_Lakes\10087_ALTD_Alternative.dwg, Layout C43_Commercial_Mass_Grading_Plan

Date: 11/19/12 Drawing: 10087_ALTD_Alternative.dwg

SECS. 28,29,32,&33, TWP. 26S., RNG. 17E.

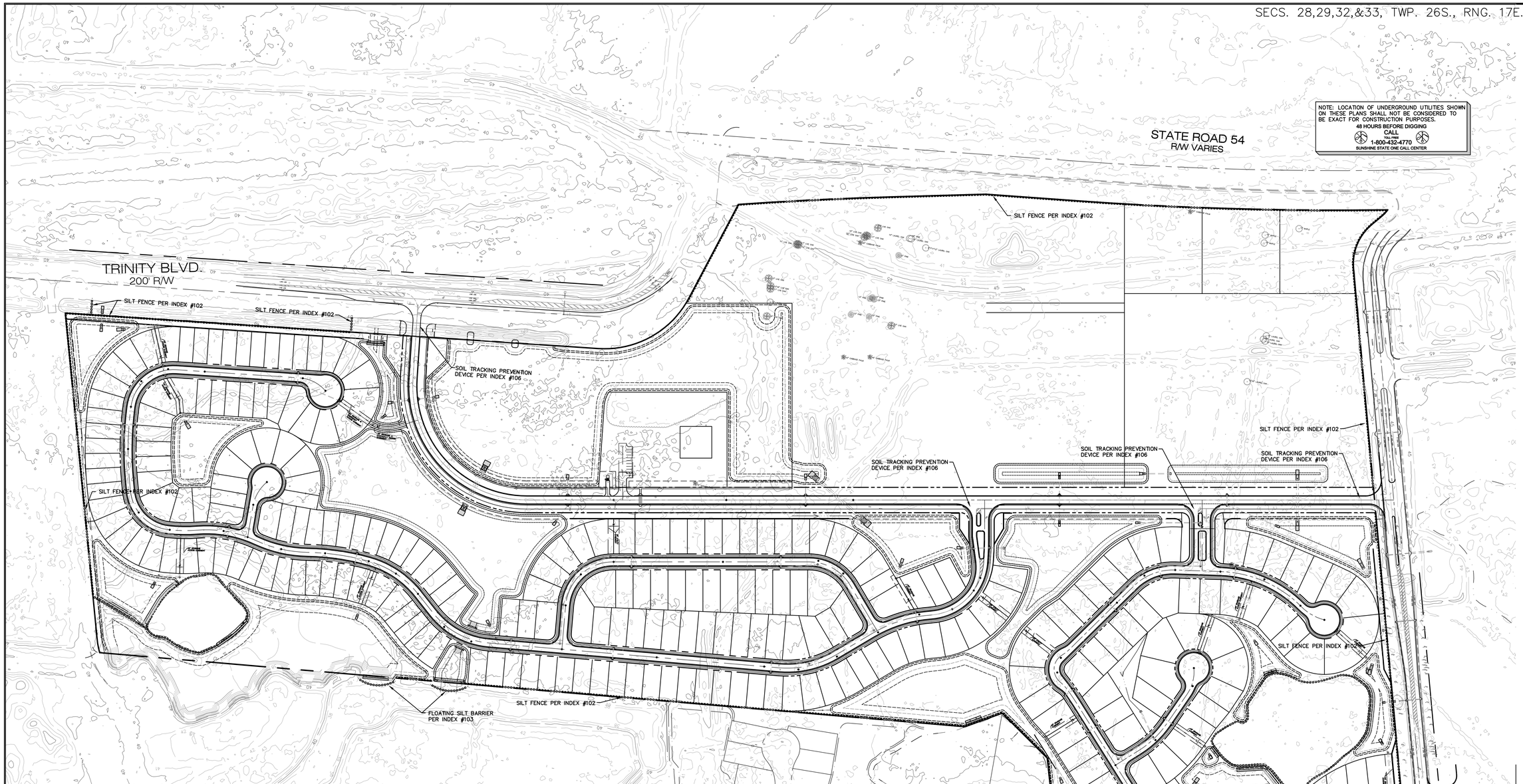

Stormwater Pollution Prevention Notes:

1. The soil erosion and sediment control devises shall be installed prior to construction, maintained throughout construction and until the site is permanently stabilized. (LDC 604 & 902.2).
2. During construction if something is uncovered, particularly of an archeological nature, that all work shall stop and that the state archeological office and the county are notified. (CP Chpt 2 FLU 1.2.14)
3. It is the owner's responsibility or ("name of responsible entity") to inspect and maintain the water retention system on a regular basis. (LDC 310.4, 605.4, 606 & 902.2.M)
4. All sodded slopes over 4 to 1, shall be installed with sod pegs(LDC 605.3.z & 902.2)
5. All demolition debris shall be removed from the site and legally disposed of. (LDC 200, 312, 400, 604 & 612)
6. All first floor elevations (ff) shall be a minimum of 1' above the base flood elevation or as required by the (LDC 1104) and 16" above the highest crown line of the street lying between the projection of the side building lines(LDC902.2.K)
7. Any off site disturbance shall be restored to the pre or better condition. (LDC 311.6, 605.3.D & P)
8. All work within the ROW will require a ROW use permit. (LDC 406.5)/ Driveway connection permit.
9. As applicable, the owner/developer will provide copies of the required permits from the respective governing agencies, prior to issuance of the SDP. (LDC 902.2.C)

LEGEND

- PROPOSED CURB INLET
- PROPOSED MITERED END SECTION
- PROPOSED STORM MANHOLE
- PROPOSED STORM DRAIN
- DRAINAGE FLOW INDICATOR
- 1140 MATCH EXIST. GRADE ELEVATION
- 13.50 PROPOSED GRADE ELEVATION (EDGE OF PAVEMENT UNLESS NOTED OTHERWISE)

N

0' 150' 300'

SCALE: 1" = 150'

LINCKS & ASSOCIATES, INC.
Engineers
Planners
5023 West Laurel Street
Tampa, Florida 33607
Tel (813) 289-0039
Fax (813) 287-0574
Lic. No. EB0004638

DATE	01/26/2012
DESIGNED	
DRAWN	DWM
CHECKED	DWD
JOB NO.	10087

The Villages of Trinity Lakes

SWPPP

REVISIONS

SEE SHEET C11

David W. Desilet
PE No. 24760

SHEET C44

DATE: 08/08/2000
TIME: 11:00am

XREF: NONE
SCALE: N/A
LAYOUT: 24x36 ANSI D
SPACE: PSPACE

PLOT SCALE: 1
PLOT CONFIG: LINCKS.PCP
PLOT STYLE: COLOR.CTB
FILE: LINCKS\ROTOTYPE\Peg.DWG

E:\Work\10087_Trinity_Lakes\10087_ALTD_Alternative.dwg, Layout C44_SWPPP

Date: 11/19/12 Drawing: 10087_ALTD_Alternative.dwg

STORMWATER POLLUTION PREVENTION
PLAN NOTES

Project Name: THE VILLAGES OF TRINITY LAKES	Owner's Name: Daniel E. Aldridge, VP Adam Smith Enterprises, Inc.
Project Address: .	Owner's Address: P.O. Box 1608 Tarpon Springs, FL 34688
Section: 28,29,32 & 33 / Township: 26 South / Range: 17 East	

SITE DESCRIPTION

Total Area of the site: 96.942 Acres (Plat)
138.745 Acres (Project Area)

Total area of the site to be disturbed:
134.964 Acres

Description of project and soil disturbing activities:

Construction of 251 lot residential subdivision and mass grading of adjacent commercial tract.

Existing site description:

Property vacant except for remnant of past agricultural activities. Site contains wetlands, pastures and overgrown fields.

.

Drainage System

Interlocked stormwater ponds discharge to existing wetland and outfalling to development to the South, as well as to the South ditch of Trinity Blvd.

Estimate the drainage area size for each discharge point:

8.85 Acres to South Trinity Blvd ditch (Basin 161CF-TBS-OS)
99.75 Acres to development to the South (Basin 161-C)
37.12 Acres to existing wetland (EP-18, Basin 162-C)

Latitude and longitude of each discharge point and identify the receiving water or MS4 for each discharge point:

28° 11' 17.41" N, 82° 37' 11.22" W. to South Trinity Blvd ditch (Basin 161CF-TBS-OS)
28° 11' 7.97" N, 82° 36' 58.39" W. to development to the South (Basin 161-C)
28° 11' 9.88" N, 82° 36' 35.26" W. to existing wetland (EP-18, Basin 162-C)
All three discharge to Duck Slough

Sequence of major events:

1. Construct soil tracking prevention devices and construction entrances.

2. Install tree barricades.

3. Install silt fence, and floating silt barriers.

4. Remove pavement, base material, former wetlands and organics.

5. Construct stormwater ponds. Provide temp bypass swales to ponds as needed.

6. Coordinate with utility companies if any utilities need to be relocated.

7. Install inlet protection at the locations of all grate inlets, curb inlets, and at the end of all exposed storm sewer pipes.

8. Finalize pavement subgrade preparation.

9. Construct all curb and gutter, gutter inlets, area inlets, and storm sewer manholes as shown on the plans. Inlet protection may be removed temporarily for this construction.

10. Remove inlet protection around inlets and manholes no more than 48 hours prior to placing stabilized base course.

11. Install base material as require for pavement. Place pavement surface asphalt.

12. Carry out final grading, seeding and planting.

13. Remove silt fencing and tree barricades after all paving is complete, exposed surfaces are stabilized and approval by engineer of record.

EROSION AND SEDIMENT CONTROLS

Stabilization Practices

Stabilization measures shall be initiated as soon as practicable, but in no case more than 7 days, in portions of the site where construction activities have temporarily or permanently ceased.

Wind Erosion Stabilization

The contactor shall denude only areas where it is expected to be graded or altered within a reasonable time frame. All pervious areas of the site included in grading that are disturbed during construction shall be graded and prepared with a combination of sod and/or seeding and mulching. Pad areas within future units where earthwork is completed shall be completely seeded and mulched. Areas where construction operations will be continuous, fugitive dust shall be managed by applying a water spray to saturate the surface soils on a daily basis (or as needed) to maintain minimal dust transport. Fugitive dust shall be monitored continuously and additional measures may need to be taken to control offsite transport of unacceptable levels of dust.

Temporary Stabilization

Top of soil stock piles and disturbed portions of the site where construction activity temporarily ceases for at least 21 days shall be stabilized with temporary grass and mulch or other approved means, no later than 14 days from the last construction activity. Grass seed shall be a mixture of 20 parts of Bermuda and 80 parts of Pensacola Bahia. The separate type s of seed used shall be thoroughly dry mixed immediately before sowing. Seed which has become wet shall not be used. The mulch material used shall normally be dry mulch. Dry mulch shall be straw or hay consisting of oat, rye or wheat straw, or of pangola, peanut, Costal Bermuda or Bahia grass hay. Only undeteriorated mulch which can be readily cut into the soil shall be used. Areas of the site which are to be paved will be temporarily stabilized by applying stabilization and base.

Permanent Stabilization

Disturbed portions of the site where construction activity permanently ceases shall be stabilized with sod no later than 14 days after last construction activity.

Structural Practices

Erosion Protection

During the construction phases, appropriate practices including, but not limited to: silt fence barriers, hay bales and watering or other methods necessary will be implemented to control fugitive dust. Contractor is to provide erosion control/sedimentation barrier (hay bales or wiltation curtain) to prevent siltation of adjacent property, streets, storm sewers and waterways per FDOT Index No. 102.

Sediment Basins

The stormwater management areas (retention areas) will serve as sediment basins during the construction period. At the contractor's discretion, the sediment basins will be constructed to the design cross-section or a minimum of 2-feet below existing ground to allow the silt to be collected and removed prior to completion of the grading.

Stormwater Management

Stormwater drainage will be provided by a curb, stormwater and catch basin systems for the developed areas. The areas not developed shall be graded to less than 2% slopes and have permanent seeding or plantings. When construction is complete the site will drain to storm water ponds that were utilized as the temporary sediment basins during the construction process. Any accumulated sediment shall be removed from the sediment basins. It is the responsibility of the contractor to construct all retention/detention areas in accordance with the approved construction plans.

SPECIFIED OTHER CONTROLS

WASTE DISPOSAL

Waste Materials

All waste material shall be collected and contained in a controlled area pursuant to state and local solid waste regulations. All trash and construction debris generated from construction is to be removed from the site and disposed of appropriately. No construction materials shall be buried on site. All personnel shall be instructed regarding the correct procedure for waste disposal. Notices stating these practices shall be posted in the on site office trailer and the construction manager responsible for the day to day site operations shall be responsible for seeing that these procedures are followed.

Hazardous Waste

If encountered, all waste materials shall be disposed of in the manner specified by state and local regulations. The contractor shall be responsible for seeing that these practices are followed.

Sanitary Waste

All sanitary waste shall be collected from portable units by a licensed sanitary waste management contractor as required by state and local codes and regulations.

OFF-SITE VEHICLE TRACKING

The contractor shall be responsible for implementing and maintaining measures to mitigate adverse impact off-site. Stabilized construction entrances/exits shall be provided to help reduce off-site vehicle tracking of sediments. The contractor shall place gravel, straw, mulch or other suitable material on ground around areas adjacent to where construction related traffic is to enter and exit site either by natural drainage or by vehicular traffic. The paved streets shall be cleaned as needed to remove any excess mud, dirt or rock tracked from the site. Dump trucks hauling material from the site shall be covered with a tarpaulin at all times.

Timing of Control Measures

As indicated in the sequence of major activities, no land clearing or grading shall begin until all erosion control measures have been installed and inspected . Areas where construction activity temporarily ceases for more than 21 days shall be stabilized with a temporary grass and mulch within 14 days of the last disturbance. Once construction activity ceases permanently that area shall be stabilized with permanent sod. After the entire site is stabilized, the accumulated sediment shall be removed from the traps and the silt fences shall be removed.

Certification of Compliance with Federal, State and Local Regulations

The Stormwater Pollution Prevention Plan reflects the City of Tampa and the Southwest Florida Water Management District (SWFWMD) requirements for storm water management and erosion and sediment control as established by City of Tampa Strom Water management Practices Manual and the Florida Administrative Code, Chapter 40D-4 and 40D-40. To ensure compliance, this plan was prepared in accordance with SWFWMD's "Basis of Review for Surface Water Management Permit Applications Within the Southwest Florida Water Management District."

Maintenance Inspection Procedures

Erosion and Sediment Control Inspection and Maintenance Practices

These are the inspection and maintenance practices that shall be used to maintain erosion and sediment control:

1. All control measures shall be inspected at least once each week and following any storm event of ½ inches or greater by a contractor or a contractor's representative.

2. All measures shall be maintained in good working order; if a repair is necessary, it shall be initiated within 24 hours of report.

3. Built up sediment shall be removed from silt fence when it has reached one-third the height of the silt fence.

4. Silt fence shall be inspected regularly for depth of sediment and tears to see if the fabric securely attached to the fence posts and to see that the fence posts are firmly in the ground.

5. The sediment basins shall be inspected depth of sediment and build up of sediment shall be removed when it reaches 10% of the design capacity or at the end of the job.

6. Temporary and permanent grassing and mulching and sodding shall be inspected for bare spots, washouts, and healthy growth.

7. A Maintenance Inspection Report shall be made after each inspection by the contractor and shall be kept in an active log readily available at the job site.

8. Either the site superintendent or his designees shall be responsible for inspections, maintenance, repair activities and completing the inspection and maintenance report.

9. Personnel selected for inspection and maintenance responsibilities shall receive training from the site superintendent. They shall be trained in all the inspection and maintenance practices necessary for keeping the erosion and sediment controls used on site in good working order.

NON-STORM WATER DISCHARGE

The following non-stormwater discharges may occur from the site during construction period:

- Water from water line flushing
- Irrigation drainage
- Pavement wash water (where no spills or leaks of toxic or hazardous materials have occurred)
- Uncontaminated groundwater (from dewatering excavation)

If said discharges do occur, they will be directed to the temporary sediment basin prior to discharge.

The following non-stormwater discharges shall not occur from the site during the construction period:

- Concrete
- Detergents
- Glass
- Metal studs
- Paints (Enamel and Latex)
- Tar
- Sand
- Fertilizers
- Cleaning Solvents
- Petroleum Based Products and Fuels
- Wood
- Masonry block
- Roofing Shingles
- Stone

SPILL PREVENTION

Material Management Practices

The following are the material management practices that shall be used to reduce the risk of spills or other accidental exposure of materials and substances to storm water runoff.

Good Housekeeping

The following good housekeeping practices shall be followed on site during the construction project:

- An effort will be made to store only enough products to do the job
- All materials stored onsite will be stored in a neat, orderly manner and, if possible, under a roof or in a containment area. At a minimum, all containers will be stored with their lids on when not in use. Drip pans shall be provided under all dispensers.
- Products will be kept in their original containers with the original manufacture's label in legible condition.
- Substances will not be mixed with one another unless recommended by the manufacturer.
- Whenever possible, all of a product will be used up before disposing of the container.
- Manufacturer's recommendations for proper use and disposal will be followed
- The Contractor's Superintendent will be responsible for daily inspections to ensure proper use and disposal of materials.

Hazardous Products

These practices are used to reduce the risks associated with hazardous materials. Products shall be kept in original containers unless they are not resealable. Original labels and material safety data shall be retained; they contain important product information. If surplus product must be disposed of, manufacture's or local and state recommended methods of proper disposal shall be followed.

Petroleum Products

All on-site vehicles shall be monitored for leaks and receive regular preventative maintenance to reduce the chance of leakage. Petroleum products shall be stored in tightly sealed containers which are clearly labeled. Any asphalt substances used on site will be applied accordingly to the manufacture's recommendations.

Fertilizers

Fertilizers used shall be applied only in the minimum amount recommended by the manufacture. Once applied, fertilizer shall be worked into the soil to limit exposure to stormwater. Storage shall be in a covered shed. The contents of any partially used bags of fertilizer shall be transferred to a sealable plastic bin to avoid spills.

Paints

All containers shall be tightly sealed and stored when not required for use. Excess paint shall not be discharged to the storm sewer system but shall be properly disposed of according to manufacture's instructions or state and local regulations.

Concrete Trucks

Contractor shall designate an area for discharge of surplus concrete or drum wash water and shall install a containment berm around this area to prevent runoff to the remainder of the site. Hard debris shall be disposed of by contractor upon completion of the project.

SPILL CONTROL PRACTICES

In addition to the good housekeeping and material management practices discussed in the previous sections of this plan, the following practices shall be followed for spill prevention and cleanup:

- Manufacture's recommended methods for spill clean up shall be clearly posted and site personnel shall be made aware of the procedures and the location of the information and clean up supplies.
- Materials and equipment necessary for spill clean up shall be kept in the material storage area on site. Equipment and materials shall include but not be limited to: brooms, dust pans, mops, rags, gloves, goggles, kitty litter, sand, sawdust, and plastic and metal trash containers.
- All spills shall be cleaned up immediately after discovery.
- The spill shall be kept well ventilated and personnel shall wear appropriate protective clothing to prevent injury from contact with hazardous substance.
- Spills of toxic or hazardous material shall be reported to the appropriate state or local government agency, regardless of the size.
- The spill prevention plan shall be adjusted to include measures to prevent this type of spill from reoccurring and the clean up procedures for future use. A description of the spill, its cause and the clean up measures shall also be included.
- The site superintendent responsible for the day to day site operations shall be the spill prevention and clean up coordinator. He or she shall designate other site personnel who will receive spill prevention and clean up training. These individuals shall each become responsible for a particular phase of prevention and clean up. The names of the responsible spill personnel shall be posted in the material storage area or in the office trailer on site, if applicable.

NOTICE OF TERMINATION

A notice of termination shall be submitted to the EPA after the construction has been completed and the site has undergone final stabilization.

POLLUTION PREVENTION PLAN CERTIFICATION

"To the best of my knowledge, I certify under penalty of law that this document and all attachments were prepared under my direction or supervision in accordance with a system designed to assure that qualified personnel properly gathered and evaluated the information submitted. Based on my inquiry of the person or persons who manage the system, or those persons directly responsible for gathering the information, the information submitted is, to the best of my knowledge and belief, true, accurate, and complete. I am aware that there are significant penalties for submitting false information, including the possibility of fines and imprisonment for knowing violations."

NAME: _____ TITLE: _____

(OPERATORY AND/OR RESPONSIBLE AUTHORITY)

SIGNATURE: _____ DATE: _____

CONTRACTOR'S CERTIFICATION

"I certify under penalty of law that I understand, and shall comply with, the terms and conditions of the State of Florida Generic Permit for Stormwater Discharge From Large and Small Construction Activities and this Stormwater Pollution Prevention Plan Prepared thereunder."

SIGNATURE	COMPANY NAME AND ADDRESS	RESPONSIBLE FOR
SIGNATURE: _____ NAME: _____ DATE: _____	COMPANY: _____ ADDRESS: _____ _____ PHONE: _____	
SIGNATURE: _____ NAME: _____ DATE: _____	COMPANY: _____ ADDRESS: _____ _____ PHONE: _____	
SIGNATURE: _____ NAME: _____ DATE: _____	COMPANY: _____ ADDRESS: _____ _____ PHONE: _____	

TESTING SCHEDULE GUIDE

ITEM	TEST	TEST SPECIFICATION	TEST REQUIREMENT	TEST FREQUENCY
EMBANKMENT	MAXIMUM DENSITY OPTIMUM MOISTURE FIELD DENSITY	AASHTO T180 ASTM D1557 AASHTO T191, T204, T238 ASTM D1556, D2937, D2922	N/A 95% OF MAXIMUM DENSITY	PER SOIL TYPE ONE PER 500 LF HORIZONTALLY; ALTERNATING LIFTS (1 FT)
UTILITY TRENCH BACKFILL UNDER ROADWAYS AND STRUCTURES	MAXIMUM DENSITY OPTIMUM MOISTURE FIELD DENSITY	AASHTO T180 ASTM D1557 AASHTO T191, T204, T238 ASTM D1556, D2937, D2922	N/A 98% OF MAXIMUM DENSITY	PER SOIL TYPE ONE PER 500 L.F HORIZONTALLY, EVERY 2' VERTICALLY D2922 AT LEAST ONE FOR EACH PIPE RUN
BACKFILL OF STRUCTURES	MAXIMUM DENSITY OPTIMUM MOISTURE FIELD DENSITY	AASHTO T180 ASTM D1557 AASHTO T191, T204, T238 ASTM D1556, D2937, D2922	N/A 98% OF MAXIMUM DENSITY	PER SOIL TYPE EVERY 2' VERTICALLY
ROADWAY SUBGRADE	BEARING VALUES MAXIMUM DENSITY OPTIMUM MOISTURE FIELD DENSITY & THICKNESS	LBR-FLA, D.O.T. AASHTO T180 ASTM D1557 AASHTO T191, T238 ASTM D1556, D2922	LBR=40 MIN N/A 98% OF MAXIMUM DENSITY	ONE PER SOIL TYPE CHECK POINT LBR AT 500 L.F. HORIZONTALLY ONE PER SOIL TYPE ONE PER 500 L.F HORIZONTALLY
BUILDING PADS	MAXIMUM DENSITY OPTIMUM MOISTURE FIELD DENSITY	AASHTO T180 ASTM D1557 AASHTO T191, T204, T238 ASTM D1556, D2937, D2922	N/A 95% OF MAXIMUM DENSITY	PER BUILDING PAD AS DIRECTED BY SOILS ENGINEER
ROADWAY BASE	BEARING VALUES MAXIMUM DENSITY OPTIMUM MOISTURE, THICKNESS FIELD DENSITY, GRADATION ATTERBERG LIMITS	LBR-FLA, D.O.T. AASHTO T180 AASHTO T191 AASHTO T191, T238 ASTM D1556, D2922 AASHTO T27, T89, T90 ASTM C136, D423, D424	100% LBR-FLA, D.O.T. N/A 98% OF MAXIMUM DENSITY PER SPECIFICATIONS	ONE PER SOURCE OR AS MATERIAL CHANGES OC. PT. LBR AT 500 L.F. HORIZONTALLY ONE PER SOURCE ONE PER 500 L.F HORIZONTALLY ONE PER SOURCE
SOIL CEMENT BASE*	MIX DESIGN MAXIMUM DENSITY OPTIMUM MOISTURE, COMPRESSIVE STRENGTH 18"COMENS TEST CORES FIELD DENSITY & THICKNESS	PORTLAND CEMENT ASSOC. SPECIFICATIONS AASHTO T134 (STANDARD) PORTLAND CEMENT ASSOC. SPECIFICATIONS PORTLAND CEMENT ASSOC. SPECIFICATIONS AASHTO T191, T238 ASTM D1556, D2922	PER SPECIFICATIONS N/A 300 PSI AT 7 DAYS 450 PSI AT 21 DAYS 95% OF MAXIMUM DENSITY	ONE PER SOIL TYPE ONE PER SOIL TYPE DAILY ONE SET PER SOIL TYPE DAILY ONE SET OF 3 CORES PER COMPRESSIVE STRENGTH SPECIMENS ONE PER 500 L.F HORIZONTALLY
ASPHALTIC CONCRETE	MATERIALS QUALITY BITUMEN CONTENT GRADATION FIELD DENSITY LOS ANGELES ABRASION THICKNESS	AASHTO T164, T30 ASTM D2172 ASTM D02950-81 AASHTO T96-77 ASTM C131-81	PER SPECIFICATIONS 98% OF LAB DENSITY N/A PER SPECIFICATIONS	PER F.D.O.T SPECIFICATIONS ONE PER DAY ONE PER 500 L.F HORIZONTALLY ONE PER SOURCE ONE PER 500 L.F
CURB & ROADWAY CONCRETE	SLUMP TEST COMPRESSIVE STRENGTH CYLINDERS	AASHTO T119-82 ASTM C143 AASHTO T23-80 ASTM C31-69	PER SPECIFICATIONS N/A 3000 PSI @ 28 DAYS	AS DEEMED NECESSARY BY SOILS ENGINEER. TESTS MAY BE RUN BY THE SOILS ENGINEER OR HIS REPRESENTATIVE ONE SET OF 3 CYLINDERS FOR 50 CUBIC YARD OF FRACTION THEREOF PER DAY INCLUDES ONE "SLUMP" TEST

NOTE: LINCKS & ASSOCIATES, INC. WILL NOT BE RESPONSIBLE FOR SCHEDULING, COORDINATING OR EVALUATION OF THE SOILS TESTING AND CERTIFICATIONS. IT SHALL BE THE RESPONSIBILITY OF THE OWNER/DEVELOPER TO MAKE THE NECESSARY ARRANGEMENT DIRECTLY WITH THE SOILS TESTING LABORATORY AND THE SITE CONTRACTOR.

* CONTRACTOR SHALL NOT PAVE OVER SOIL CEMENT BASE UNTIL A 30 DAY CURING TIME HAS ELAPSED.

** TEST SPECIFICATIONS & FREQUENCY MAY BE ALTERED BY THE SOILS ENGINEER.

LINCKS & ASSOCIATES, INC.
5023 West Laurel Street
Tampa, Florida 33607
Tel (813) 289-0039
Fax (813) 287-0674
Lic. No. EB0004638
Engineers
Planners

DATE	11/04/2011
DESIGNED	DWD
DRAWN	DWM
CHECKED	DWD
JOB NO.	10087

The Villages of Trinity Lakes

Stormwater Pollution Prevention Notes

REVISIONS

David W. Desilet
PE No. 24760

SHEET C45 OF

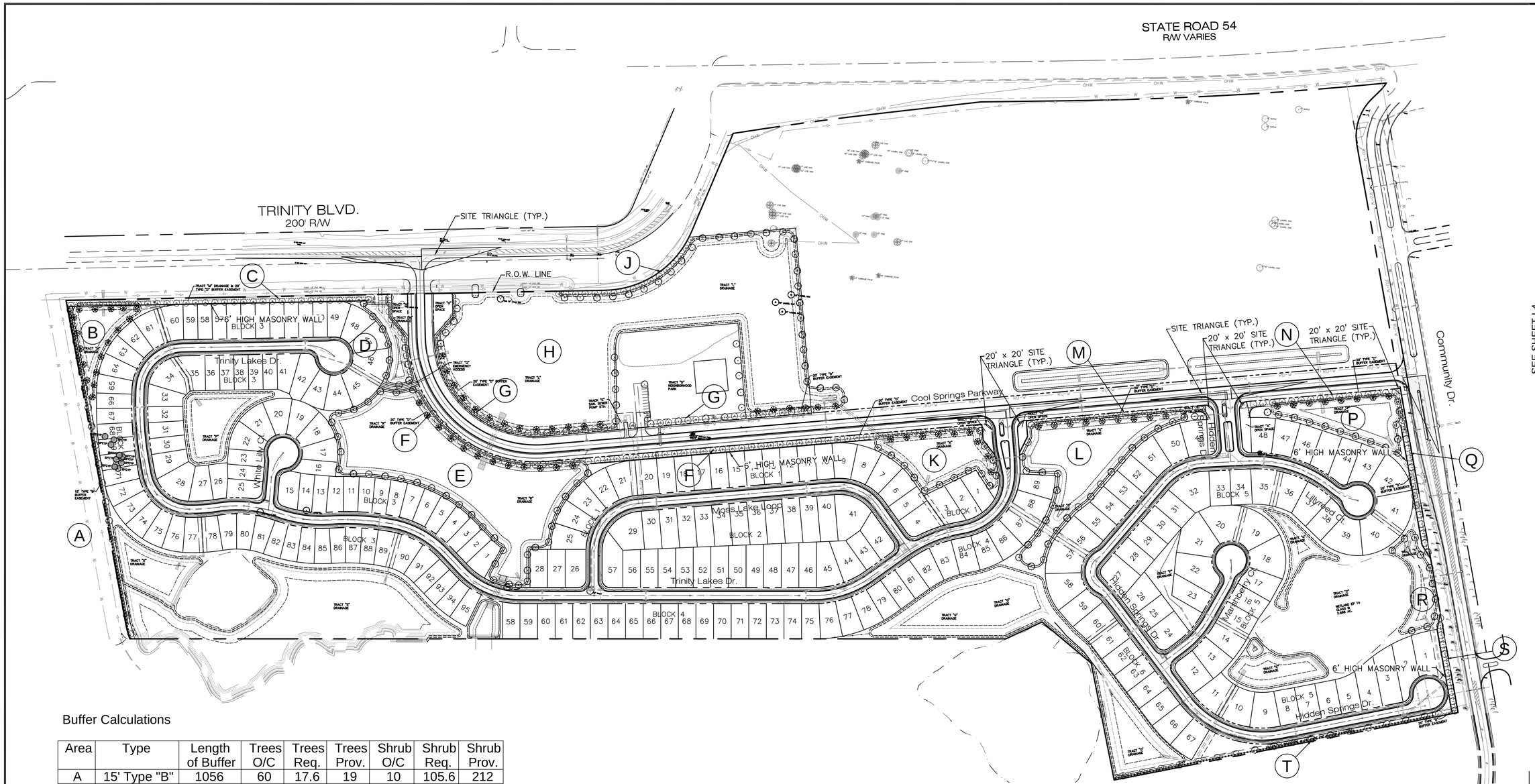

Buffer Calculations

Area	Type	Length of Buffer	Trees O/C	Trees Req.	Trees Prov.	Shrub O/C	Shrub Req.	Shrub Prov.
A	15' Type "B"	1056	60	17.6	19	10	105.6	212
B	Pond	833	50	16.66	17	N/A	0.0	0
C	20' Type "D"	962	30	32.07	32	6	160.3	166
D	Pond	376	50	7.52	8	N/A	0.0	0
E	Pond	2374	50	47.48	48	N/A	0.0	0
F	20' Type "D"	2050	30	68.33	77	6	341.7	370
G	20' Type "D"	1280	30	42.67	47	6	213.3	248
H	Pond	3106	50	62.12	62	N/A	0.0	0
J	20' Type "D"	509	30	16.97	17	6	84.8	91
K	Pond	1017	50	20.34	22	N/A	0.0	0
L	Pond	1796	50	35.92	36	N/A	0.0	0
M	20' Type "D"	561	30	18.7	19	6	93.5	101
N	20' Type "D"	481	30	16.03	16	6	80.2	85
P	Pond	1012	50	20.24	20	N/A	0.0	0
Q	20' Type "D"	530	30	17.67	18	6	88.3	89
R	Pond	501	50	10.02	10	N/A	0.0	0
S	20' Type "D"	319	30	10.63	11	6	53.2	54
T	15' Type "B"	1075	60	17.92	18	10	107.5	213
Park					1			

Notes
Area "H" & "J" border for approx. 330 LF of ditch along Trinity Blvd.
The trees & shrubs in this area were removed for drainage and utility access.

PLANT MATERIAL LIST

SYMBOL		QUANTITY	BOTANICAL NAME	COMMON NAME	SPECIFICATIONS	NATIVE	DROUGHT TOLERANT
	SP	17	SABAL PALMETTO	CABBAGE PALM WITH BOOTS	10' HT	YES	YES
	QV	143	QUERCUS VIRGINIANA	LIVE OAK	6-8' HT X 4' SPD, 2" CAL, 65 GALLON	YES	YES
	UP	82	ULMUS PARVIFOLIA "ALLEE'	ALLEE ELM	6-8' HT X 4' SPD, 2" CAL, 65 GALLON	YES	YES
	MC	164	MYRICA CERIFERA	WAX MYRTLE	10' HT X 8' SPD, 2" CAL, 30 GALLON	YES	YES
	IV	7	ILEX VOMITORIA "PENDULA"	WEEPING YAUPON HOLLY	10' HT X 4' SPD, 2" CAL, 30 GALLON	YES	YES
	NS	76	NYSSA SYLVATICA	BLACK GUM	10' HT X 4' SPD, 2" CAL, 30 GALLON	YES	YES
	AR	8	ACER RUBRUM "FLORIDA FLAME"	RED MAPLE	10' HT X 4' SPD, 2" CAL, 30 GALLON	YES	YES
	GL	2	GORDONIA LASIANTHUS	LOBLOLLY BAY	10' HT X 4' SPD, 2" CAL, 30 GALLON	YES	YES
	LJ	208	LIGUSTRUM JAPONICA	TREE-FORM LIGUSTRUM	6' HT X 4' SPD, MULTI-STEM, B & B	YES	YES
TOTAL TREES		706					
	VS	1421	VIBURNUM SUSPENSUM	SANDANKWA VIBURNUM	20" HT X 20" SPD, 3 GALLON	YES	YES

N
0' 150' 300'
SCALE: 1" = 150'

LINCKS & ASSOCIATES, INC.
5023 West Laurel Street
Tampa, Florida 33607
Tel (813) 289-0039
Fax (813) 287-0574
Lic. No. EB0004638
Engineers
Planners

SEE SHEET L4

DATE	01/26/2012
DESIGNED	
DRAWN	DWM
CHECKED	DWD
JOB NO.	10087

The Villages of Trinity Lakes

Landscape Plan

SEE SHEET L2

REVISIONS

10/21/2012	Added 20x20 Site Triangles Previously Removed

David W. Desilet
PE No. 24760

SHEET L1

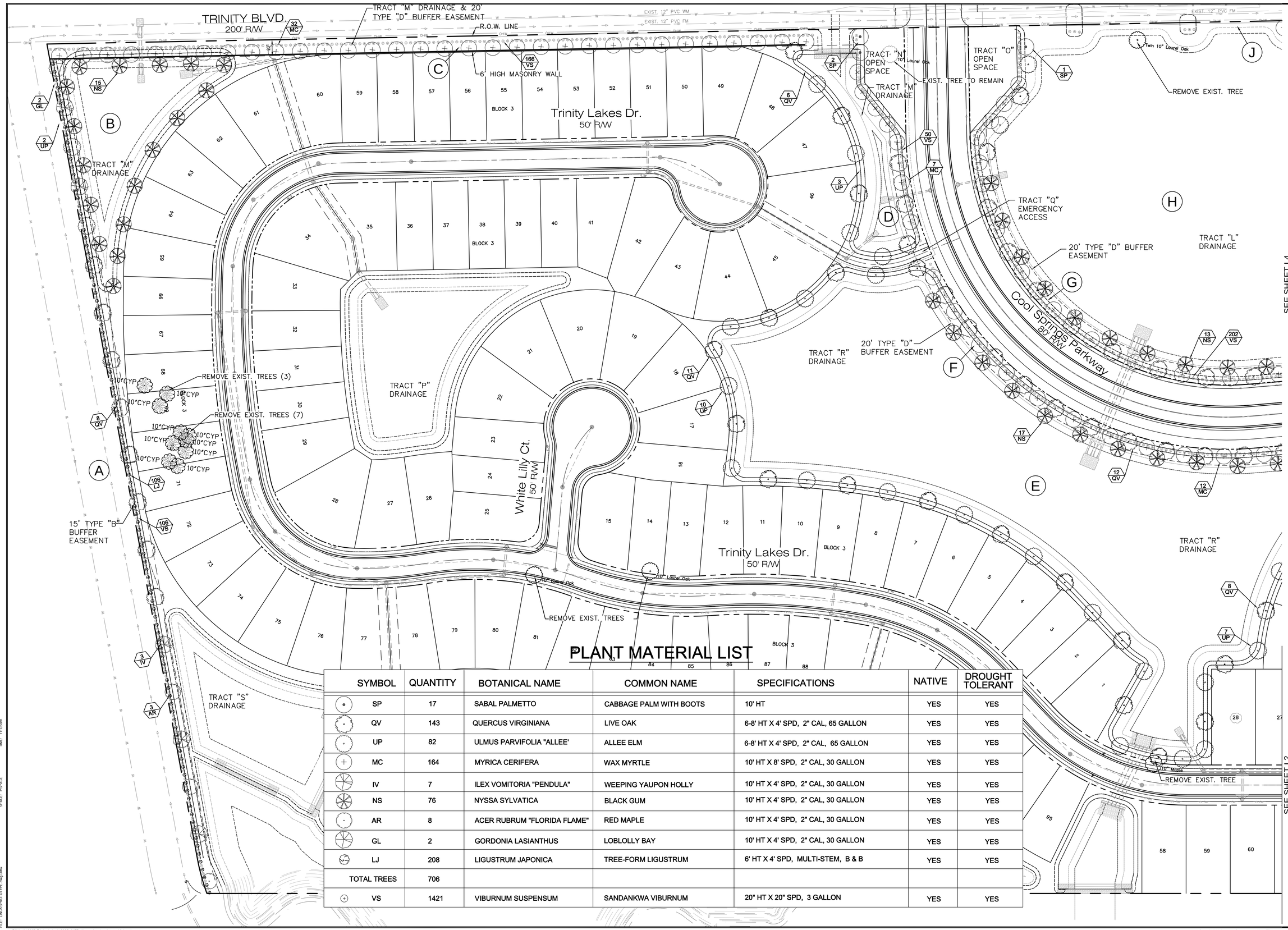

PLANT MATERIAL LIST

SYMBOL	QUANTITY	BOTANICAL NAME	COMMON NAME	SPECIFICATIONS	NATIVE	DROUGHT TOLERANT
SP	17	SABAL PALMETTO	CABBAGE PALM WITH BOOTS	10' HT	YES	YES
QV	143	QUERCUS VIRGINIANA	LIVE OAK	6-8' HT X 4' SPD, 2" CAL, 65 GALLON	YES	YES
UP	82	ULMUS PARVIFOLIA "ALLEE'	ALLEE ELM	6-8' HT X 4' SPD, 2" CAL, 65 GALLON	YES	YES
MC	164	MYRICA CERIFERA	WAX MYRTLE	10' HT X 8' SPD, 2" CAL, 30 GALLON	YES	YES
IV	7	ILEX VOMITORIA "PENDULA"	WEEPING YAUPON HOLLY	10' HT X 4' SPD, 2" CAL, 30 GALLON	YES	YES
NS	76	NYSSA SYLVATICA	BLACK GUM	10' HT X 4' SPD, 2" CAL, 30 GALLON	YES	YES
AR	8	ACER RUBRUM "FLORIDA FLAME"	RED MAPLE	10' HT X 4' SPD, 2" CAL, 30 GALLON	YES	YES
GL	2	GORDONIA LASIANTHUS	LOBLOLLY BAY	10' HT X 4' SPD, 2" CAL, 30 GALLON	YES	YES
LJ	208	LIGUSTRUM JAPONICA	TREE-FORM LIGUSTRUM	6' HT X 4' SPD, MULTI-STEM, B & B	YES	YES
TOTAL TREES	706					
VS	1421	VIBURNUM SUSPENSUM	SANDANKWA VIBURNUM	20" HT X 20" SPD, 3 GALLON	YES	YES

N

0' 50' 100'

SCALE: 1" = 50'

LINCKS & ASSOCIATES, INC.
5023 West Laurel Street
Tampa, Florida 33607
Tel (813) 289-0039
Fax (813) 287-0574
Lic. No. EB0004638
Engineers
Planners

DATE	01/26/2012
DESIGNED	
DRAWN	DWM
CHECKED	DWD
JOB NO.	10087

The Villages of Trinity Lakes

Landscape Plan

REVISIONS

03/27/12 Utilities "Divested" To Avoid Conflict With Landscaping

David W. Desilet
PE No. 24760

SHEET
L2

PLOT SCALE: 1
PLOT CONFIG: LINCKS.PCP
PLOT STYLE: LINCKS.CTB
FILE: LINCKSPROTOTYPE.dwg DWG

XREF: NONE
SCALE: N/A
LAYOUT: L2_LINCKS
SPACE: PSPACE

DATE: 08/08/2000
TIME: 11:05am

E:\Work\10087_Trinity_Lakes\10087_ALTD_Alternative.dwg, Layout L2_Landscape

Date: 01/29/13 Drawing: 10087_ALTD_Alternative.dwg

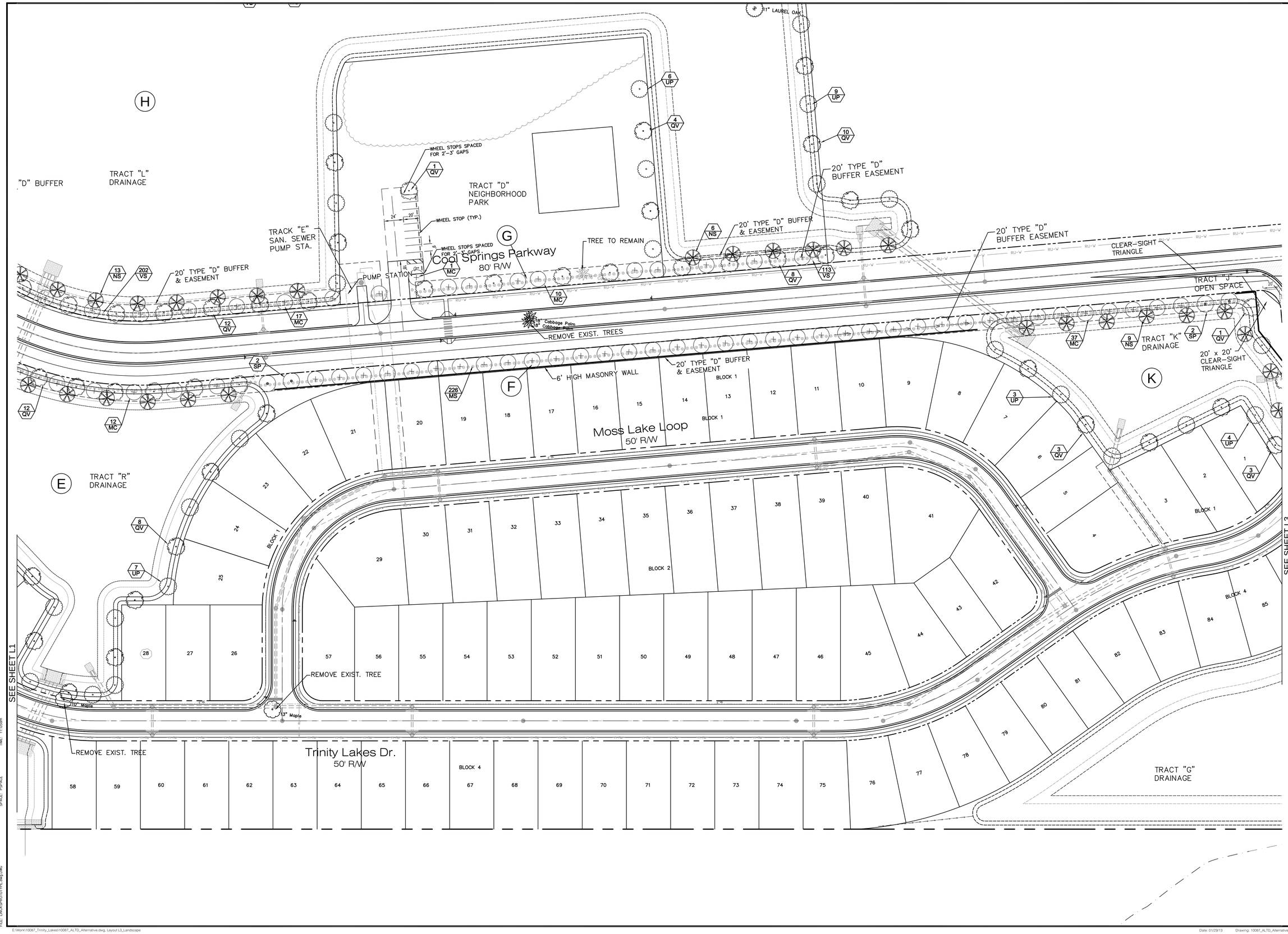

N

0' 50' 100'

SCALE: 1" = 50'

LINCKS & ASSOCIATES, INC.
5023 West Laurel Street
Tampa, Florida 33607
Tel (813) 289-0039
Fax (813) 287-0674
Lic. No. EB0004638

Engineers
Planners

DATE	01/26/2012
DESIGNED	
DRAWN	DWM
CHECKED	DWD
JOB NO.	10087

The Villages of Trinity Lakes

Landscape Plan

REVISIONS

03/27/12	Utilities "Ghosted" To Avoid Conflict With Landscaping
10/31/2012	Added 20x20 Site Triangles Previously Removed

David W. Desilet
PE No. 24760

SHEET L3

PLOT SCALE: 1
PLOT CONFIG: LINCKS.PCP
PLOT STYLE: Color.CTB (Plot-AutoCAD2000)
FILE: LINCSPROTOTYPE.dwg DWG

DATE: 08/08/2000
TIME: 11:05am

XREF: NONE
SCALE: 1/1A
LAYOUT: LINCKS
SPACE: PSPACE

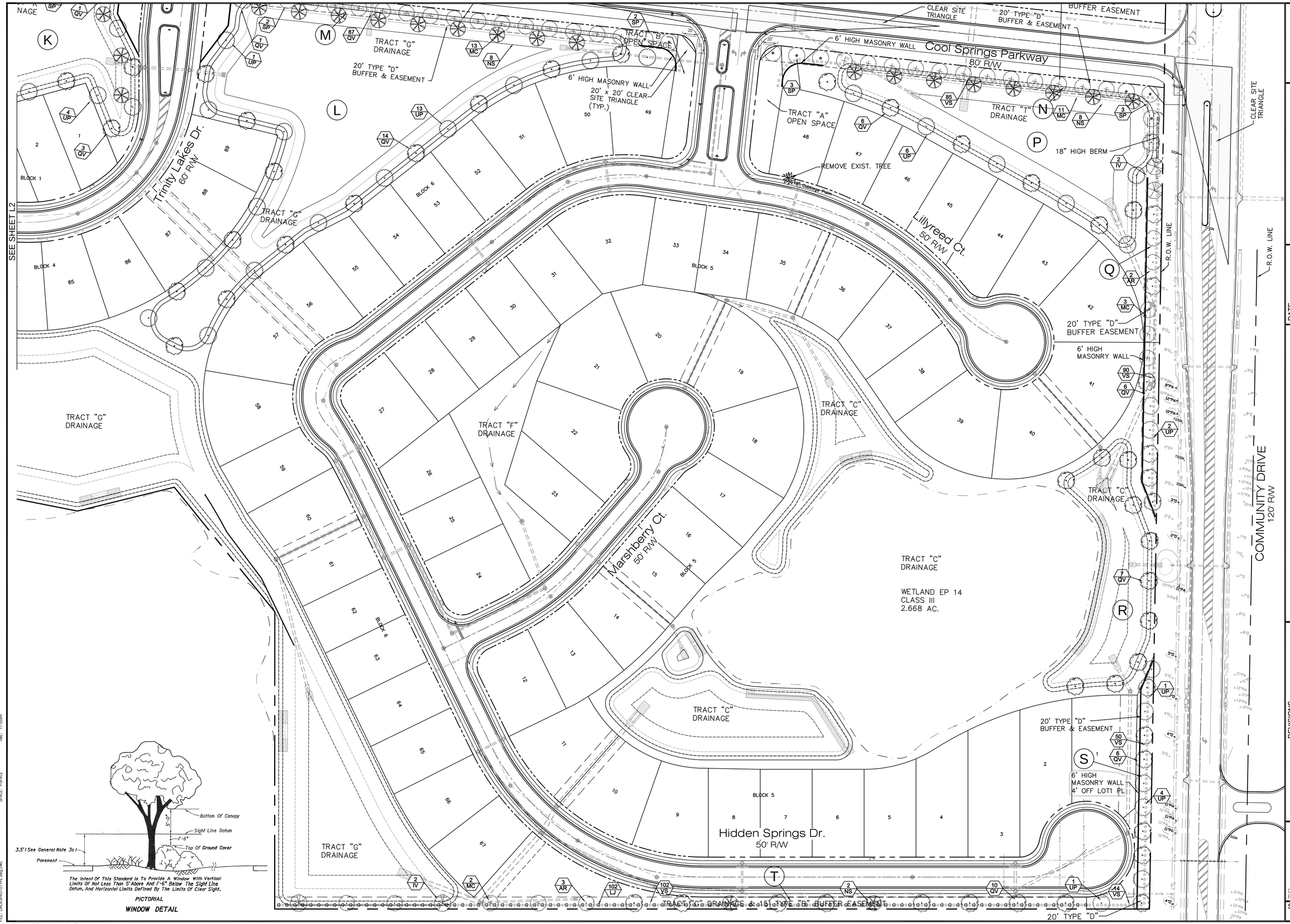

LINCKS & ASSOCIATES, INC.
5023 West Laurel Street
Tampa, Florida 33607
Tel (813) 289-0039
Fax (813) 287-0574
Lic. No. EB0004638
Engineers
Planners

DATE	01/26/2012
DESIGNED	
DRAWN	DWM
CHECKED	DWD
JOB NO.	10087

The Villages of Trinity Lakes

Landscape Plan

REVISIONS

03/27/12	Utilities "Ghosted" To Avoid Conflict With Landscaping
10/31/2012	Added 20x20 Site Triangles Previously Removed
01/28/2013	Revised Wall Location Adjacent to Lot 1

David W. Desilet
PE No. 24760

SHEET
L4

DATE: 08/08/2000
TIME: 11:05am
XREF: NONE
SCALE: N/A
LAYOUT: LINCKS
SPACE: PSPACE
PLOT SCALE: 1
PLOT CONFIG: LINCKS.PCP
DWG: L:\LINCKS\PROJECTS\10087\10087.DWG
FILE: L:\LINCKS\PROTOTYPE.dwg DWG

E:\Work\10087_Trinity_Lakes\10087_ALTD_Alternative.dwg, Layout L4_Landscape
Date: 01/30/13
Drawing: 10087_ALTD_Alternative.dwg

LANDSCAPE INSTALLATION NOTES

1) ALL PLANT MATERIALS SHALL BE FLORIDA #1 OR BETTER AS GIVEN IN, GRADES AND STANDARDS FOR NURSERY PLANTS , FEBRUARY 1998 EDITION, PUBLISHED BY THE FLORIDA DEPARTMENT OF AGRICULTURE AND CONSUMER SERVICES.

2) LOCATION OF PLANTS ON THE PLAN ARE DIAGRAMMATIC- SEE THE LANDSCAPE ARCHITECT FOR QUESTIONS ON EXACT LOCATIONS. THE PLANT MATERIALS LIST IS PROVIDED FOR THE CONVENIENCE OF THE LANDSCAPE CONTRACTOR. SHOULD THERE BE ANY DISCREPANCY BETWEEN THE PLANT LIST AND THE PLAN, THE PLAN SHALL PREVAIL.

3) IT IS THE LANDSCAPE CONTRACTORS RESPONSIBILITY TO INSURE THAT ALL PLANT BED AREAS HAVE PROPER DRAINAGE FOR OPTIMUM GROWTH OF LANDSCAPE MATERIAL BEFORE INSTALLATION BEGINS.

4) THE CONTRACTOR SHALL INSURE THAT ALL PLANTING ISLANDS AND OTHER AREAS SHALL BE CLEAN OF TRASH, CONSTRUCTION DEBRIS, OR OTHER WASTE MATERIALS TO A DEPTH OF 24" PRIOR TO LANDSCAPE INSTALLATION.

5) ALL PLANT BEDS AND TREE RINGS SHALL BE TREATED WITH A PRE-EMERGENT HERBICIDE AND THEN TOP-DRESSED WITH 3" DEEP PINE BARK NUGGETS. MULCH SHALL BE LAYED OVER 10 MIL WEED MAT "EASY GARDNER WEED BLOCK", "DEWITT WEED BARRIER" OR APPROVED EQUIVALENT BY THE OWNER. ALL NEW TREES SHALL HAVE A TREE RING WITH A MINIMUM OF 24" RADIUS, ALL NEW TREES AND PALMS SHALL BE STAKED.

6) NEW SOD SHALL BE ST. AUGUSTINE FLORATAM AS SHOWN ON THE PLAN. CONTRACTOR SHALL DETERMINE EXACT QUANTITIES IN THE FIELD. SOD AREAS SHALL BE MAINTAINED BY THE CONTRACTOR FROM THE TIME OF INSTALLATION TO THE TIME OF FINAL ACCEPTANCE. TOP OF SOD AND MULCH SHALL BE 1" BELOW SIDEWALK.

7) TREES SHRUBS, AND GROUND COVER SHALL BE INSTALLED USING THE FOLLOWING PROCEDURE: PLANT PITS SHALL BE EXCAVATED TO TWICE THE DIAMETER OF THE PLANT ROOT BALL. AERATE EXISTING SOIL BEFORE BACKFILLING PIT. ADD AGRIFORM FERTILIZER TABLETS TO EACH PLANT PIT, AS PER THE SPECIFICATIONS.

8) TREE INSTALLATION: ALL REQUIRED TREES SHALL BE INSTALLED 1" - 2" ABOVE FINISH GRADE. TREES INSTALLED OR BURIED TOO DEEP SHALL BE RESET TO THIS STANDARD. REMOVE THE TOP 1/3 OF THE WIRE BASKETS ON ALL B & B STOCK.

EXISTING TREE TABLE				
No.	Desc.	Remove	Save	Inches Removed
3	10" LAUREL OAK TREE	3		30
1	TWIN 10" LAUREL OAK TREE		1	
1	10" MAPLE TREE	1		10
1	13" MAPLE TREE	1		13
1	16" CABBAGE PALM TREE		1	
3	18" CABBAGE PALM TREE	3		54
1	16" LIVE OAK		1	
10	10" CYPRESS TREES	10		100
21	TOTAL TREES	18	3	207
TREE REPLACEMENT (INCHES)		207	/ 3 =	69
2" TREE REPLACEMENT		35	TREES	

Size of Lot(SF)	Minimum Number of Trees
Less than 3,500	1
3,500-6,000	2
6,001-7,500	3
7,501-9,500	4
9,501-16,000	6
Over 16,000	8

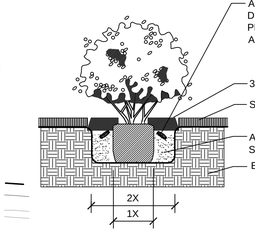

SHRUB PLANTING DETAIL

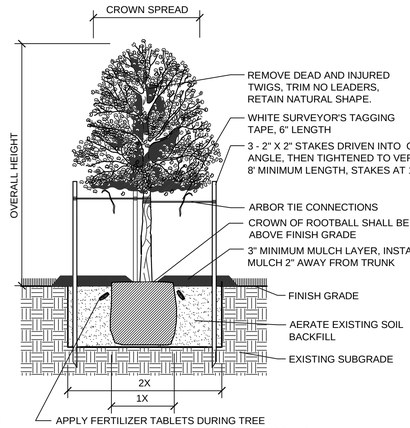

TREE STAKING AND PLANTING DETAIL

CONTRACTOR SHALL REMOVE STAKING AND GUYING MATERIALS AFTER ONE GROWING SEASON.

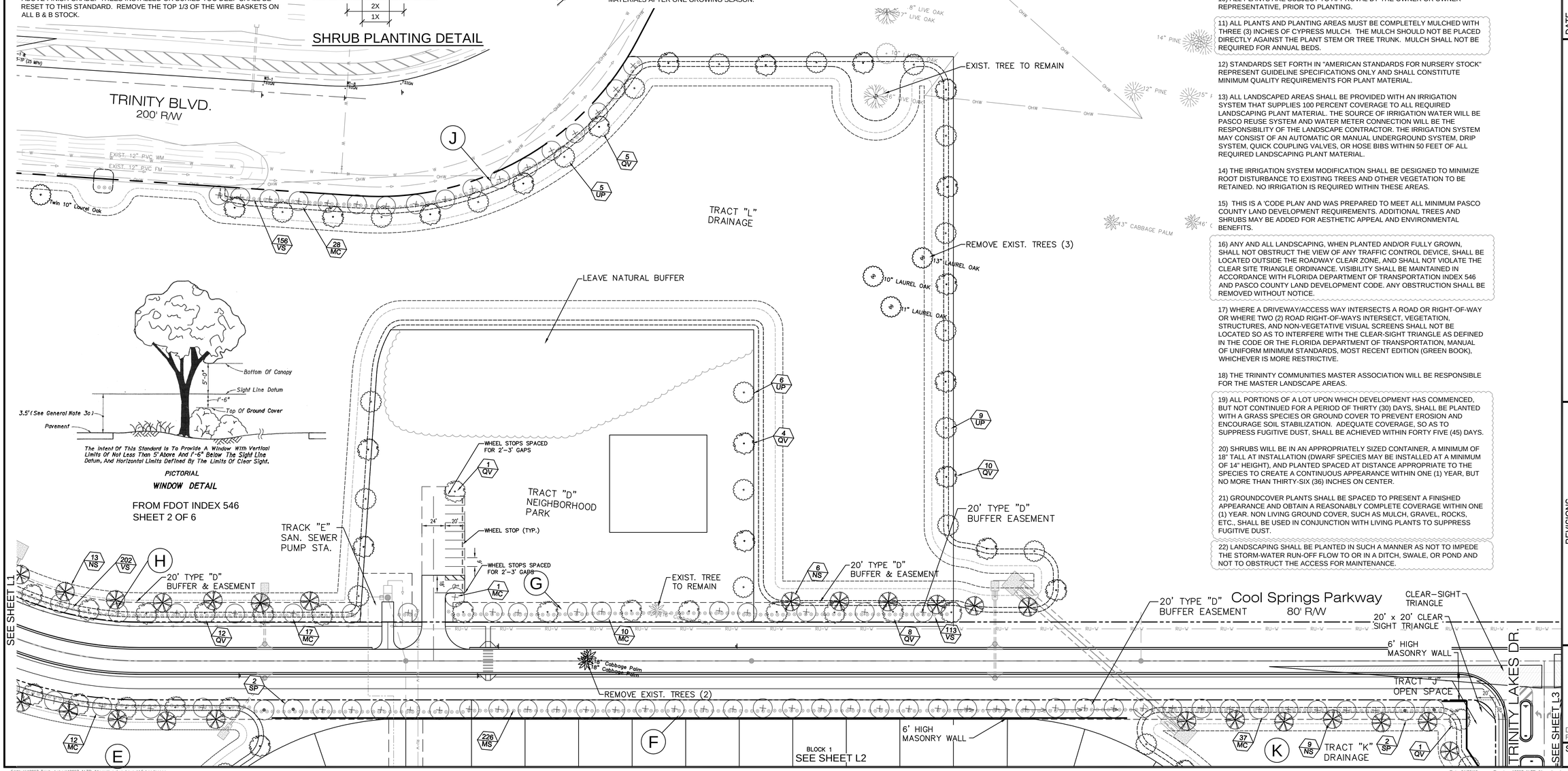

WINDOW DETAIL

FROM FDOT INDEX 546
SHEET 2 OF 6

LANDSCAPE GENERAL NOTES

1) ALL INVASIVE OR EXOTIC SPECIES LOCATED WITHIN THE PROJECT AREA SHALL BE REMOVED.

2) ALL PLANTS MUST BE HEALTHY, VIGOROUS MATERIAL, FREE OF PESTS AND DISEASE.

3) ALL PLANTS MUST BE CONTAINER-GROWN OR BALLED AND BURLAPPED AS INDICATED IN THE PLANT LIST. NO BARE ROOTS WILL BE ACCEPTED.

4) ALL PLANTS SHALL BE TRIANGULATELY SPACED.

5) PRIOR TO CONSTRUCTION THE LANDSCAPE CONTRACTOR SHALL BE RESPONSIBLE FOR LOCATING ALL UNDERGROOUND UTILITIES AND SHALL AVOID DAMAGE TO ALL UTILITIES DURING THE COURSE OF THE WORK. THE LANDSCAPE CONTRACTOR IS RESPONSIBLE FOR REPAIRING ANY AND ALL DAMAGE TO UTILITIES.

6) ALL TREES MUST BE GUYED AND STAKED.

7) THE LANDSCAPE CONTRACTOR IS RESPONSIBLE FOR VERIFIYING ALL QUANTITIES SHOWN ON THESE PLANS BEFORE PRICING THE WORK. ANY DEVIATION FROM PLANT QUANTITY, SIZE, OR GRADE MAY JEOPARDIZE THE CERTIFICATE OF OCCUPANCY. ADDITIONAL PLANTS MAY BE ADDED, BUT MUST COMPLY WITH COUNTY REQUIREMENTS.

8) ALL PLANTING SHALL BE DONE IN ACCORDANCE WITH ACCEPTABLE HORTICULTURAL PRACTICES. THIS IS TO INCLUDE PROPER PLANTING MIX, PLANT BED, AND TREE PIT PREPARATION, PRUNING, STAKING, OR GUY IN, WRAPPING, SPRAYING, FERTILIZATION, PLANTING AND ADEQUATE MAINTENANCE UNTIL ACCEPTANCE BY OWNER.

9) ALL PLANTS SHALL BE GUARANTEED FOR 120 DAYS FROM FINAL INSPECTION AND ACCEPTANCE. ALL TREES SHALL BE GUARANTEED FOR 1 (ONE) YEAR.

10) ALL PLANTS ARE SUBJECT TO APPROVAL BY THE OWNER OR OWNER REPRESENTATIVE, PRIOR TO PLANTING.

11) ALL PLANTS AND PLANTING AREAS MUST BE COMPLETELY MULCHED WITH THREE (3) INCHES OF CYPRESS MULCH. THE MULCH SHOULD NOT BE PLACED DIRECTLY AGAINST THE PLANT STEM OR TREE TRUNK. MULCH SHALL NOT BE REQUIRED FOR ANNUAL BEDS.

12) STANDARDS SET FORTH IN "AMERICAN STANDARDS FOR NURSERY STOCK" REPRESENT GUIDELINE SPECIFICATIONS ONLY AND SHALL CONSTITUTE MINIMUM QUALITY REQUIREMENTS FOR PLANT MATERIAL.

13) ALL LANDSCAPED AREAS SHALL BE PROVIDED WITH AN IRRIGATION SYSTEM THAT SUPPLIES 100 PERCENT COVERAGE TO ALL REQUIRED LANDSCAPING PLANT MATERIAL. THE SOURCE OF IRRIGATION WATER WILL BE PASCO REUSE SYSTEM AND WATER METER CONNECTION WILL BE THE RESPONSIBILITY OF THE LANDSCAPE CONTRACTOR. THE IRRIGATION SYSTEM MAY CONSIST OF AN AUTOMATIC OR MANUAL UNDERGROUND SYSTEM, DRIP SYSTEM, QUICK COUPLING VALVES, OR HOSE BIBS WITHIN 50 FEET OF ALL REQUIRED LANDSCAPING PLANT MATERIAL.

14) THE IRRIGATION SYSTEM MODIFICATION SHALL BE DESIGNED TO MINIMIZE ROOT DISTURBANCE TO EXISTING TREES AND OTHER VEGETATION TO BE RETAINED. NO IRRIGATION IS REQUIRED WITHIN THESE AREAS.

15) THIS IS A 'CODE PLAN' AND WAS PREPARED TO MEET ALL MINIMUM PASCO COUNTY LAND DEVELOPMENT REQUIREMENTS. ADDITIONAL TREES AND SHRUBS MAY BE ADDED FOR AESTHETIC APPEAL AND ENVIRONMENTAL BENEFITS.

16) ANY AND ALL LANDSCAPING, WHEN PLANTED AND/OR FULLY GROWN, SHALL NOT OBSTRUCT THE VIEW OF ANY TRAFFIC CONTROL DEVICE, SHALL BE LOCATED OUTSIDE THE ROADWAY CLEAR ZONE, AND SHALL NOT VIOLATE THE CLEAR SITE TRIANGLE ORDINANCE. VISIBILITY SHALL BE MAINTAINED IN ACCORDANCE WITH FLORIDA DEPARTMENT OF TRANSPORTATION INDEX 546 AND PASCO COUNTY LAND DEVELOPMENT CODE. ANY OBSTRUCTION SHALL BE REMOVED WITHOUT NOTICE.

17) WHERE A DRIVEWAY/ACCESS WAY INTERSECTS A ROAD OR RIGHT-OF-WAY OR WHERE TWO (2) ROAD RIGHT-OF-WAYS INTERSECT, VEGETATION, STRUCTURES, AND NON-VEGETATIVE VISUAL SCREENS SHALL NOT BE LOCATED SO AS TO INTERFERE WITH THE CLEAR-SIGHT TRIANGLE AS DEFINED IN THE CODE OR THE FLORIDA DEPARTMENT OF TRANSPORTATION, MANUAL OF UNIFORM MINIMUM STANDARDS, MOST RECENT EDITION (GREEN BOOK), WHICHEVER IS MORE RESTRICTIVE.

18) THE TRININTY COMMUNITIES MASTER ASSOCIATION WILL BE RESPONSIBLE FOR THE MASTER LANDSCAPE AREAS.

19) ALL PORTIONS OF A LOT UPON WHICH DEVELOPMENT HAS COMMENCED, BUT NOT CONTINUED FOR A PERIOD OF THIRTY (30) DAYS, SHALL BE PLANTED WITH A GRASS SPECIES OR GROUND COVER TO PREVENT EROSION AND ENCOURAGE SOIL STABILIZATION. ADEQUATE COVERAGE, SO AS TO SUPPRESS FUGITIVE DUST, SHALL BE ACHIEVED WITHIN FORTY FIVE (45) DAYS.

20) SHRUBS WILL BE IN AN APPROPRIATELY SIZED CONTAINER, A MINIMUM OF 18" TALL AT INSTALLATION (DWARF SPECIES MAY BE INSTALLED AT A MINIMUM OF 14" HEIGHT), AND PLANTED SPACED AT DISTANCE APPROPRIATE TO THE SPECIES TO CREATE A CONTINUOUS APPEARANCE WITHIN ONE (1) YEAR, BUT NO MORE THAN THIRTY-SIX (36) INCHES ON CENTER.

21) GROUNDCOVER PLANTS SHALL BE SPACED TO PRESENT A FINISHED APPEARANCE AND OBTAIN A REASONABLY COMPLETE COVERAGE WITHIN ONE (1) YEAR. NON LIVING GROUND COVER, SUCH AS MULCH, GRAVEL, ROCKS, ETC., SHALL BE USED IN CONJUNCTION WITH LIVING PLANTS TO SUPPRESS FUGITIVE DUST.

22) LANDSCAPING SHALL BE PLANTED IN SUCH A MANNER AS NOT TO IMPEDE THE STORM-WATER RUN-OFF FLOW TO OR IN A DITCH, SWALE, OR POND AND NOT TO OBSTRUCT THE ACCESS FOR MAINTENANCE.

N
0' 50' 100'
SCALE: 1" = 50'

LINCKS & ASSOCIATES, INC.
5023 West Laurel Street
Tampa, Florida 33607
Tel (813) 289-0039
Fax (813) 287-0674
Lic. No. EB0004638
Engineers
Planners

DATE	01/26/2012
DESIGNED	
DRAWN	DWM
CHECKED	DWD
JOB NO.	10087

The Villages of Trinity Lakes

Landscape Plan

REVISIONS

02/27/12	Utilities "Ghosted" To Avoid Conflict With Landscaping
10/31/12	Added Note 22, Corrected Note 16, Added 20x20 Site Triangles Previously Removed

David W. Desilet
PE No. 24760

SHEET L5