COMPARK 75

Lot 10

Simultaneous Construction Plans

Near East Corner of C.R. 54 and Pet Lane
Pasco County, Florida 35559

Owner/Developer:
HR Pasco, LLP
1102 East Fletcher
Tampa, FL 33612
Phone: (813) 349-8544
Contact: Ross Kirk

Civil Engineer:
Spring Engineering, Inc.
3014 U.S. Highway 19 N.
Holiday, Florida 34691
Phone: (727) 938-1516
Fax: (727) 942-4174
Roland P. Dove, P.E.
Yancey B. Abuton, P.E.

Surveyor:
CCI Surveying and Mapping, Inc.
4025 Cranbrook Place
New Port Richey, Florida 34652
Phone: (727) 243-5292
Fax: (727) 232-0048

Location Map:

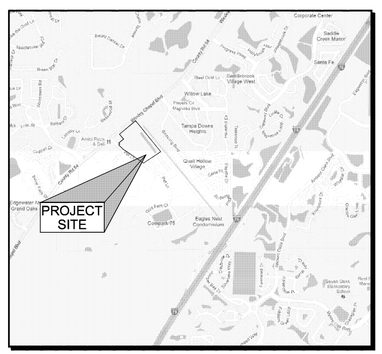

SECTION 14, TOWNSHIP 26 S, RANGE 19 E
PARCEL I.D.: 14-26-19-0000-00300-0050

Aerial Map:

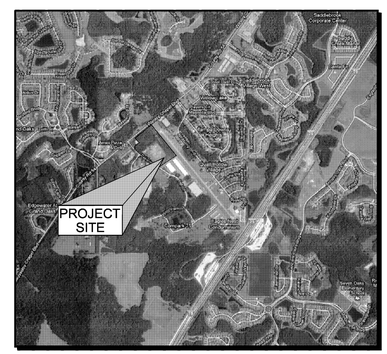

Index:

T1.0	Title Sheet - R0
C1.0	Existing Conditions Plan - R0
C1.1	Demolition / Erosion Control Plan - R0
C1.2	Erosion Control and NPDES Notes and Details - R0
C2.0	Site Plan - R0
C2.1	Site Notes & Details - R0
C3.0	Paving, Grading & Drainage Plan - R0
C3.1	Paving, Grading & Drainage Notes & Details - R0
C4.0	Utility Plan - R0
C4.1,2	Utility Plan Notes & Details - R0
C5.0	Landscape Plan - R0
C5.1	Landscape Legend - R0
C5.2	Landscape and Irrigation Details - R0
C6.0	Irrigation Plan - R0
C7.0	General Notes - R0

SPRING ENGINEERING, INC.
ARCHITECTURE - ENGINEERING - LAND PLANNING
3014 U.S. HWY. 19, HOLIDAY, FL. (727) 938-1516

Call before you dig
It's not just another catchy slogan. It's the law.
FLORIDA LAW REQUIRES EXCAVATORS TO NOTIFY OWNERS OF UNDERGROUND FACILITIES NO LESS THAN TWO (2) DAYS PRIOR TO EXCAVATION
Sunshine State One Call
www.callbeforeyoudig.com
1-800-432-4770

THIS DRAWING AND THE DESIGN SHOWN ARE THE PROPERTY OF SPRING ENGINEERING, INC. AND ARE NOT TO BE REPRODUCED, COPIED, PUBLISHED, OR USED IN WHOLE OR PART WITHOUT WRITTEN CONSENT. THEY ARE TO BE USED ONLY FOR THE SITE AND PROJECT IDENTIFIED AND SHALL BE RETURNED UPON REQUEST.

100%
CONSTRUCTION PLANS
ISSUE DATE: 10/05/12

REVISIONS

REV	DATE	DESCRIPTION

ROLAND P. DOVE, P.E.
FL REG. No. 36933
DATE

COMPARK 75
LOT 10
Near East Corner of C.R. 54 and Pet Lane
Pasco County, FL 35559

CONTRACT DATE:
May 9, 2012

SPRING ENGINEERING, INC.
ENGINEERING • LAND PLANNING • ARCHITECTURE
3014 U.S. HWY 19, HOLIDAY, FL (727) 938-1516
FL COA NO. 00005158 & LICENSE NO. AA-C001747

TITLE SHEET

DESIGNED BY: RPD
DRAWN BY: RPD
CHECKED BY: RPD
JOB NO.
2012-28
SHEET NO.
T1.0

SECTION 14, TOWNSHIP 26 SOUTH, RANGE 19 EAST
PASCO COUNTY, FLORIDA

EXISTING CONDITIONS PLAN

SCALE: 1"=50'

0 25 50 100 150

LEGAL DESCRIPTION

PARCEL 2:

A PARCEL OF LAND LYING IN SECTION 14, TOWNSHIP 26 SOUTH, RANGE 19 EAST, PASCO COUNTY, FLORIDA, BEING FURTHER DESCRIBED AS FOLLOWS: COMMENCE AT THE SOUTHEAST CORNER OF SAID SECTION 14 AND RUN NORTH 48°19'57" WEST, 486.51 FEET TO A POINT ON THE SOUTHERLY RIGHT OF WAY LINE OF STATE ROAD NO. 54; THENCE NORTH 50°32'55" EAST, 320.00 FEET ALONG SAID SOUTHERLY RIGHT OF WAY LINE OF STATE ROAD NO. 54 TO THE POINT OF BEGINNING; THENCE CONTINUE NORTH 50°32'55" EAST, 634.79 FEET ALONG SAID SOUTHERLY RIGHT OF WAY LINE OF STATE ROAD NO. 54; THENCE SOUTH 39°27'05" EAST, 1,224.00 FEET; THENCE SOUTH 57°42'36" WEST, 617.03 FEET, THENCE NORTH 55°33'28" WEST, 771.12 FEET TO A POINT ON A CURVE; THENCE ALONG THE NORTHEASTERLY BOUNDARY OF AN INGRESS-EGRESS EASEMENT AS RECORDED IN OFFICIAL RECORDS BOOK 1502, PAGE 1477, PUBLIC RECORDS OF PASCO COUNTY, FLORIDA, THE FOLLOWING TWO (2) COURSES: (1) NORTHWESTERLY 120.89 FEET ALONG THE ARC OF A CURVE TO THE RIGHT, HAVING A RADIUS OF 250.00 FEET AND A CENTRAL ANGLE OF 27°42'20", CHORD BEARING NORTH 53°18'15" WEST, 119.71 FEET, TO A POINT OF TANGENCY, (2) NORTH 39°27'05" WEST, 60.00 FEET; THENCE NORTH 50°32'55" EAST, 40.00 FEET; THENCE NORTH 39°27'05" WEST, 30.00 FEET; THENCE NORTH 50°32'55" EAST, 180.00 FEET; THENCE NORTH 39°27'05" WEST, 200.00 FEET TO THE POINT OF BEGINNING.

LEGEND

(C)	CALCULATED MEASUREMENT
(D)	DESCRIPTION MEASUREMENT
(F)	FIELD MEASUREMENT
(P)	PLAT MEASUREMENT
(D)	RECORD MEASUREMENT
A/C	AIR CONDITIONER
BC	BACK OF CURB
CMP	CORRUGATED METAL PIPE
CONC	CONCRETE
ELEV	ELEVATION
ERCP	ELLIPTICAL REINFORCED CONCRETE PIPE
FL	FLOW LINE
HYD	FIRE HYDRANT
ID	IDENTIFICATION
JP	JURISDICTIONAL POINT (ESTABLISHED BY OTHERS)
LB	LICENSED BUSINESS NUMBER
LP	LIGHT POLE
OHW	OVERHEAD WIRE
PSM	PROFESSIONAL SURVEYOR AND MAPPER
RCP	REINFORCED CONCRETE PIPE
R/W	RIGHT-OF-WAY
SHW	SEASONAL HIGH WATER POINTS (ESTABLISHED BY OTHERS)
SSMH	SANITARY-SEWER MANHOLE
TYP	TYPICAL
UP	UTILITY POLE
WM	WATER METER
WV	WATER VALVE
0.00'	SPOT ELEVATION
	PINE TREE (SIZE NOTED)
	OAK TREE (SIZE NOTED)
	MAPLE TREE (SIZE NOTED)

SURVEYOR'S NOTES

1. THIS SURVEY MAP AND/OR REPORT OR THE COPIES HEREOF ARE NOT VALID WITHOUT THE SIGNATURE AND THE ORIGINAL RAISED SEAL OF A FLORIDA LICENSED SURVEYOR AND MAPPER. ADDITIONS OR DELETIONS TO SURVEY MAPS OR REPORTS BY OTHER THAN THE SIGNING PARTY OR PARTIES ARE PROHIBITED WITHOUT WRITTEN CONSENT OF THE SIGNING PARTY OR PARTIES.
2. BASIS OF BEARINGS: DEED BEARING OF N50°32'55"E, ALONG THE SOUTHERLY RIGHT-OF-WAY LINE OF STATE ROAD 54(D), AS SHOWN HEREON.
3. THIS OFFICE HAS NOT ABSTRACTED THIS FOR ANY RECORDED CLAIMS OF TITLE EASEMENTS OR RESTRICTIONS. THE PRESENCE OR ABSENCE OF ANY SUCH CLAIMS IS NOT CERTIFIED HEREON.
4. NO UNDERGROUND IMPROVEMENTS OR UTILITIES WERE LOCATED EXCEPT THOSE SHOWN HEREON.
5. ELEVATIONS ARE BASED ON THE NORTH AMERICAN VERTICAL DATUM OF 1988.
6. UNLESS NOTED OTHERWISE, NO UNDERGROUND FOUNDATIONS LOCATED.
7. C.C.I. SURVEYING & MAPPING, INC. ACCEPTS NO RESPONSIBILITY FOR THE IDENTIFICATION OF THE TREE SPECIES SHOWN HEREON. EVERY EFFORT HAS BEEN MADE TO PROPERLY IDENTIFY THE TREES SHOWN HEREON, HOWEVER TREE IDENTIFICATION IS OUTSIDE THE AREA OF EXPERTISE OF A PROFESSIONAL LAND SURVEYOR. THE TREE TYPES SHOWN HEREON ARE FOR INFORMATIONAL PURPOSES ONLY AND SHOULD ONLY BE USED AFTER CONFIRMATION BY A CERTIFIED ARBORIST OR OTHER SUCH PROFESSIONAL.

LINE TABLE

LINE	LENGTH	BEARING
L1(D)	40.00'	N50°32'55"E
L1(F)	39.94'	N50°28'17"E
L2(D)	30.00'	N39°27'05"W
L2(F)	30.07'	N39°28'13"W
L3(D)	60.00'	N39°27'05"W
L3(F)	59.96'	N39°31'42"W

CURVE TABLE

CURVE	LENGTH	RADIUS	CHORD BEARING	CHORD LENGTH
C1(D)	120.89'	250.00'	N53°18'15"W	119.71'
C1(F)	120.81'	250.00'	N53°19'39"W	119.64'

BENCHMARKS

CONTROL BENCHMARK: STAINLESS STEEL ROD WITH A NGS LOGO CAP IS STAMPED X 669. BENCHMARK IS LOCATED APPROXIMATELY 0.2 OF A MILE SOUTHWEST OF MAGNOLIA BOULEVARD ON THE SOUTHERLY SIDE OF STATE ROAD 54. ELEVATION = 63.09' (NAVD88)

SITE BENCHMARK #1: FOUND PK NAIL (NO ID) ON THE NORTHWESTERLY SIDE OF A ENTRANCE/LANDSCAPE ISLAND – NEAR THE NORTHEAST EDGE OF PROJECT (SEE SURVEY). ELEVATION = 66.38' (NAVD88)

SITE BENCHMARK #2: FOUND PK NAIL & TAB LB-6113, NEAR THE SOUTHWEST CORNER OF SUBJECT PARCEL (SE SURVEY). ELEVATION = 66.40' (NAVD88)

Call before you dig
It's not just another catchy slogan. It's the law
FLORIDA LAW REQUIRES EXCAVATORS TO NOTIFY OWNERS OF UNDERGROUND FACILITIES NO LESS THAN TWO (2) DAYS PRIOR TO EXCAVATION
Sunshine State One Call
www.callsunshine.com
1-800-432-4770

THIS DRAWING AND THE DESIGN SHOWN ARE THE PROPERTY OF SPRING ENGINEERING, INC. AND ARE NOT TO BE REPRODUCED, COPIED, PUBLISHED, OR USED IN WHOLE OR PART WITHOUT WRITTEN CONSENT. THEY ARE TO BE USED ONLY FOR THE SITE AND PROJECT IDENTIFIED AND SHALL BE RETURNED UPON REQUEST.

100%
CONSTRUCTION PLANS
ISSUE DATE: 10/05/12

REVISIONS

REV	DATE	DESCRIPTION

ROLAND P. DOVE, P.E.
FL REG. No. 36353
DATE

CIOMPARK 75
LOT 10
Near East Corner of C.R. 54 and Pet Lane
Pasco County, FL 35559

CONTRACT DATE:
May 9, 2012

SPRING ENGINEERING, INC.
ENGINEERING • LAND PLANNING • ARCHITECTURE
3014 U.S. HWY 19, HOLIDAY, FL (727) 938-1516
FL COA NO. 00005158 & LICENSE NO. AA-C001747

EXISTING
CONDITIONS PLAN

DESIGNED BY: RPD
DRAWN BY: RPD
CHECKED BY: RPD
JOB NO.
2012-28
SHEET NO.
C1.0

SECTION 14, TOWNSHIP 26 SOUTH, RANGE 19 EAST
PASCO COUNTY, FLORIDA

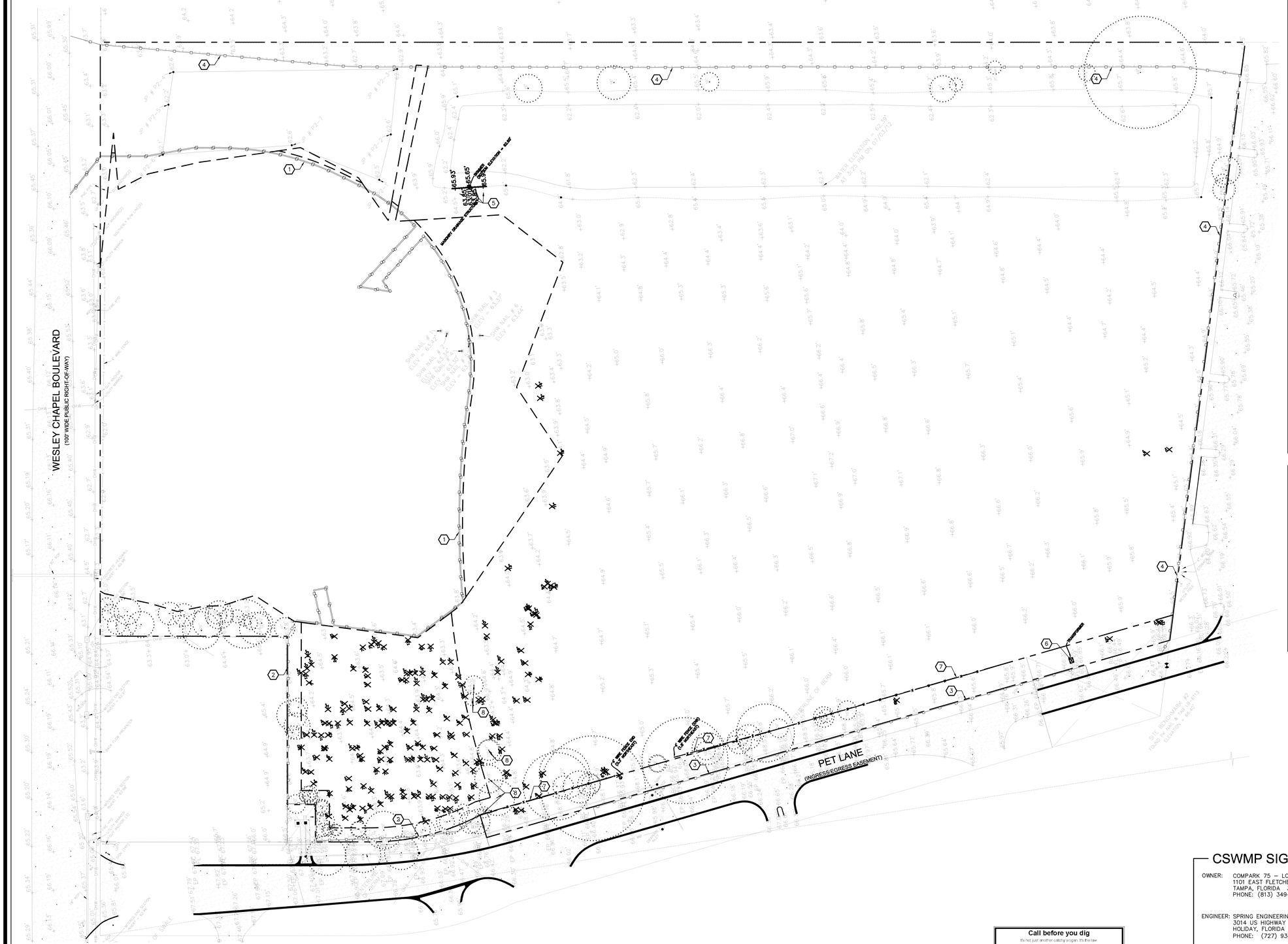

SPECIAL INSTRUCTIONS

A. ALL BIDDERS MUST VISIT THE SITE TO VERIFY CONDITIONS BEFORE SUBMITTING BIDS.

B. IF EVIDENCE OF THE EXISTENCE OF HISTORIC RESOURCES IS DISCOVERED OR OBSERVED AT DEVELOPMENT SITES OR DURING DEVELOPMENT ACTIVITIES AFTER FINAL APPROVAL, ALL WORK SHALL CEASE IN THE AREA OF EFFECT AS DETERMINED BY THE DIRECTOR. THE DEVELOPER, OWNER, CONTRACTOR, OR AGENT THEREOF SHALL NOTIFY THE DIRECTOR OF HISTORICAL RESOURCES WITHIN TWO WORKING DAYS. EXAMPLES OF SUCH EVIDENCE INCLUDE WHOLE OR FRAGMENTARY STONE TOOLS, SHELL TOOLS, ABORIGINAL OR HISTORIC POTTERY, HISTORIC GLASS, HISTORIC BOTTLES, BONE TOOLS, HISTORIC BUILDING FOUNDATIONS, SHELL MOUNDS, SHELL MIDDENS, OR SAND MOUNDS. THE DIRECTOR SHALL ASSESS THE SIGNIFICANCE OF THE FINDS WITHIN THREE WORKING DAYS OF NOTIFICATION AND TO MITIGATE ANY ADVERSE EFFECTS SO AS TO MINIMIZE DELAYS TO DEVELOPMENT ACTIVITIES.

C. IF ANY HUMAN SKELETAL REMAINS OR ASSOCIATED BURIAL ARTIFACTS ARE DISCOVERED AT DEVELOPMENT SITES OR DURING DEVELOPMENT ACTIVITY, ALL WORK IN THE AREA MUST CEASE, AND THE PERMITTEE MUST IMMEDIATELY NOTIFY THE NEAREST LAW ENFORCEMENT OFFICE AND NOTIFY THE DIRECTOR OF HISTORICAL RESOURCES WITHIN TWO WORKING DAYS. ACCORDING TO CHAPTER 872, FLORIDA STATUTES, IT IS UNLAWFUL TO DISTURB, VANDALIZE, OR DAMAGE A HUMAN BURIAL.

D. THE SOIL EROSION AND SEDIMENT CONTROL DEVICES SHALL BE INSTALLED PRIOR TO CONSTRUCTION, MAINTAINED THROUGHOUT CONSTRUCTION AND UNTIL THE SITE IS PERMANENTLY STABILIZED.

E. ALL DEMOLITION DEBRIS SHALL BE REMOVED FROM THE SITE AND LEGALLY DISPOSED OF.

F. CONTRACTOR IS TO INSPECT AND MAINTAIN THE DOUBLE-SILT FENCE ALONG THE WETLAND ON A WEEKLY BASIS.

G. CONTRACTOR IS TO REPORT WELLS NOT SHOWN ON THESE PLANS TO THE SARASOTA COUNTY HEALTH DEPARTMENT ENVIRONMENTAL HEALTH WITHIN 24 HOURS OF DISCOVERY DURING EXCAVATION, EARTHMOVING OR CONSTRUCTION.

H. THE WETLAND, MESIC HAMMOCK, AND ASSOCIATED UPLAND VEGETATIVE BUFFERS SHALL BE MAINTAINED IN ACCORDANCE WITH MANAGEMENT GUIDELINES CONTAINED WITHIN THE COMPREHENSIVE PLAN AS A PRESERVE AND LABELED A PRESERVE ON ALL PLANS. ALL ACTIVITIES INCLUDING BUT NOT LIMITED TO FILLING, EXCAVATING, WELL DRILLING, ALTERING VEGETATION (INCLUDING TRIMMING OF BOTH TREES AND UNDERSTORY) AND STORING OF MATERIALS SHALL BE PROHIBITED WITHIN PRESERVATION AREAS, UNLESS WRITTEN APPROVAL IS FIRST OBTAINED FROM RESOURCE PROTECTION SERVICES. EXCEPTION MAY BE GRANTED BY RESOURCE PROTECTION SERVICES TO FACILITATE IMPLEMENTATION OF APPROVED HABITAT MANAGEMENT PLANS OR THE HAND REMOVAL OF NUISANCE/INVASIVE VEGETATION.

I. A TREE PERMIT IS REQUIRED PRIOR TO ANY TREE REMOVAL OR CONSTRUCTION.

DEMO KEYNOTES

1. 1,285 LF OF DOUBLE SILT FENCES AND/OR TURBIDITY BARRIERS.
2. 485 LF OF SILT FENCE.
3. 570 LF OF SILT FENCE.
4. 1,880 LF OF SILT FENCE.
5. REMOVE EXISTING CONTROL STRUCTURE AND ASSOCIATED SAND/CEMENT RIP-RAP.
6. RELOCATE EXISTING TRANSFORMER. COORDINATE WITH WITHLACOOCHEE RIVER ELECTRIC COOPERATIVE.
7. REMOVE EXISTING FENCE.
8. TREE TO BE PROTECTED PER TREE PROTECTION DETAIL ON SHEET C1.2. EXCAVATION WITHIN THE TREE BARRICADE SHALL BE SUPERVISED BY A CERTIFIED TREE ARBORIST.

× REMOVE EXISTING TREE.

CSWMP SIGNATURES

OWNER: COMPARK 75 – LOT 10
1101 EAST FLETCHER AVE.
TAMPA, FLORIDA 33612
PHONE: (813) 349-8544

ROSS KIRK

ENGINEER: SPRING ENGINEERING, INC.
3014 US HIGHWAY 19
HOLIDAY, FLORIDA 34691
PHONE: (727) 938-1516

ROLAND P. DOVE, P.E.
PROJECT ENGINEER #36933

Call before you dig
It's not just another catchy slogan. It's the law
FLORIDA LAW REQUIRES EXCAVATORS TO NOTIFY OWNERS OF UNDERGROUND FACILITIES NO LESS THAN TWO (2) DAYS PRIOR TO EXCAVATION
Sunshine State One Call
www.callsunshine.com
1-800-432-4770

THIS DRAWING AND THE DESIGN SHOWN ARE THE PROPERTY OF SPRING ENGINEERING, INC. AND ARE NOT TO BE REPRODUCED, COPIED, PUBLISHED, OR USED IN WHOLE OR PART WITHOUT WRITTEN CONSENT. THEY ARE TO BE USED ONLY FOR THE SITE AND PROJECT IDENTIFIED AND SHALL BE RETURNED UPON REQUEST.

NORTH

DEMOLITION / EROSION CONTROL PLAN

SCALE: 1"=50'

0 25 50 100 150

100%
CONSTRUCTION PLANS
ISSUE DATE: 10/05/12

REVISIONS

REV	DATE	DESCRIPTION

ROLAND P. DOVE, P.E.
FL REG. No. 36933
DATE

COMPARK 75

LOT 10
Near East Corner of C.R. 54 and Pet Lane
Pasco County, FL 35559

CONTRACT DATE:
May 9, 2012

SPRING ENGINEERING, INC.
ENGINEERING • LAND PLANNING • ARCHITECTURE
3014 U.S. HWY 19, HOLIDAY, FL (727) 938-1516
FL COA NO. 00005158 & LICENSE NO. AA-C001747

DEMOLITION / EROSION CONTROL PLAN

DESIGNED BY: RPD
DRAWN BY: RPD
CHECKED BY: RPD
JOB NO. 2012-28
SHEET NO. C1.1

DEMO GENERAL NOTES

A. BUILDING AND APPURTENANCES DESIGNATED FOR DEMOLITION SHALL NOT BE DISTURBED BY THE CONTRACTOR UNTIL FURNISHED WITH NOTICE OF POSSESSION AND APPROVAL TO PROCEED FROM OWNER. THE CONTRACTOR SHALL COORDINATE THE SCHEDULE WITH EXISTING TENANTS AND ADJACENT PROPERTY OWNERS.

B. FOUNDATIONS, SLABS AND ALL UNDERGROUND STRUCTURES AND UTILITIES DESIGNATED FOR REMOVAL SHALL BE REMOVED ENTIRELY. AREAS TO BE BACK FILLED IN ACCORDANCE WITH GEOTECHNICAL REPORT.

C. ALL MATERIAL EXCEPT THAT BELONGING TO A PUBLIC UTILITY COMPANY OR AS IDENTIFIED BY THE OWNER SHALL BECOME PROPERTY OF THE CONTRACTOR. CONTRACTOR SHALL NOTIFY OWNER OF WATER, ELECTRIC, OR GAS METERS WHEN METERS ARE READY FOR REMOVAL. CONTRACTOR IS RESPONSIBLE FOR DISCONNECTING ALL UTILITIES IN COMPLIANCE WITH LOCAL REQUIREMENTS.

D. AS SOON AS DEMOLITION WORK HAS BEEN COMPLETED AND APPROVED BY THE OWNER PAVEMENT AND GRADING OPERATIONS MAY BEGIN.

E. CONTRACTOR IS SOLELY RESPONSIBLE FOR ANY DAMAGE TO EXISTING UTILITIES THAT ARE INTENDED TO PROVIDE SERVICE WHETHER SHOWN ON THE PLANS OR NOT.

F. ALL EXISTING UTILITIES WITHIN THE BUILDING PAD AREA ARE TO BE COMPLETELY REMOVED, UNLESS NOTED OTHERWISE ON THE PLANS.

G. CONTRACTOR TO VERIFY THAT ALL UTILITIES HAVE BEEN ABANDONED OR PROPERLY SHUT OFF PRIOR TO EXCAVATION.

H. EXISTING UTILITIES AND TOPO LOCATIONS ARE BASED ON THE BEST AVAILABLE INFORMATION. THE CONTRACTOR IS SOLELY RESPONSIBLE FOR VERIFYING ALL EXISTING UTILITY LOCATION WHETHER SHOWN ON PLANS OR NOT.

I. PRIOR TO INITIATING DEMOLITION WORK THE CONTRACTOR SHALL DEVELOP A VIDEO RECORD OF THE EXISTING STRUCTURES AND SURROUNDING PROPERTIES. THE RECORD SHALL INCLUDE CONDITIONS OF EXISTING STREETS AND ADJACENT PROPERTIES. ONE COPY OF THE VIDEO RECORD SHALL BE PROVIDED TO THE OWNER AND ONE TO THE ENGINEER OF RECORD.

J. ALL DEBRIS FROM DEMOLITION NOT BEING REUSED, SHALL BE HAULED OFF SITE AND DISPOSED BY LEGAL MEANS.

K. CONTRACTOR SHALL ERECT AND MAINTAIN TEMPORARY FENCE FOR THE DURATION OF ALL DEMOLITION PHASES. UPON COMPLETION OF DEMOLITION PHASES, FENCE MAINTENANCE SHALL BE RESPONSIBILITY OF THE SITE CONTRACTOR.

L. CONTRACTOR SHALL NOT RESTRICT ACCESS TO ADJOINING PROPERTIES DURING DEMOLITION OR CONSTRUCTION. ACCESS SHALL BE MAINTAINED SO AS NOT TO INTERRUPT NORMAL OPERATIONS OF ADJACENT FACILITIES.

M. CONTRACTOR SHALL NOT ALLOW ANY UTILITY OR SERVICES TO THE NEIGHBORING PROPERTY(S) TO BE INTERRUPTED WITHOUT THE EXPRESSED WRITTEN PERMISSION OF THE RESPECTIVE OWNERS. THE CONTRACTOR IS RESPONSIBLE TO MAINTAIN ALL UTILITY SERVICES TO THE BUILDING. IF IT IS NECESSARY FOR CONNECTIONS TO BE INTERRUPTED, THE CONTRACTOR IS RESPONSIBLE TO PROVIDE TEMPORARY SERVICES (I.E. GENERATORS, PORTABLE GAS TANKS, ETC.). THE CONTRACTOR IS RESPONSIBLE TO COORDINATE ALL UTILITY ABANDONMENT AND REMOVAL WITH THE RESPECTIVE UTILITY COMPANIES.

N. ANY EXISTING UTILITIES COMPLETELY EXCAVATED AND REMOVED SHALL BE BACKFILLED IN ACCORDANCE WITH GEOTECHNICAL REPORT.

O. PENDING APPROVAL FROM LOCAL JURISDICTION, OWNER AND ENGINEER, CONTRACTOR MAY USE ON-SITE REMOVED CONCRETE PAVING MATERIAL AS FILL MATERIAL IN PROPOSED PARKING AREAS. RECYCLING OF CONCRETE ONSITE WILL OCCUR ONLY IF 1.) FDEP AIR QUALITY STANDARDS CAN BE MAINTAINED AND 2). FDOT SPECIFICATIONS CAN BE MET BY TESTING OF SAMPLE MATERIALS. VERIFY WITH ON-SITE GEOTECHNICAL ENGINEER THAT MATERIALS ARE SUITABLE FOR PLACEMENT. CONTRACTOR SHALL BE RESPONSIBLE FOR PHASING AND PLACEMENT OF RECYCLED MATERIALS.

P. WORK CANNOT OCCUR OUTSIDE OF THE DEMOLITION LIMITS WITHOUT PRIOR CONSENT OF OWNER, ADJACENT OWNER, AND LOCAL JURISDICTION.

Q. EROSION CONTROL PRACTICES MUST BE IN PLACE AND MAINTAINED DURING DEMOLITION.

R. GENERAL CONTRACTOR IS TO PRESENT LICENSING INFORMATION TO THE STATE ENVIRONMENTAL PROTECTION AGENCY THIRTY (30) DAYS PRIOR TO THE COMMENCEMENT OF ANY DEMOLITION.
MOTIVE

S. IT IS THE OWNER'S, OPERATOR'S OR CONTRACTOR'S RESPONSIBILITY TO COMPLY WITH THE PROVISIONS OF SECTION 469.003, FLORIDA STATUTES, AND TO NOTIFY THE DEPARTMENT OF ENVIRONMENTAL PROTECTION OF HIS OR HER INTENTIONS TO REMOVE ASBESTOS, WHEN APPLICABLE, IN ACCORDANCE WITH STATE AND FEDERAL LAW. ASBESTOS ABATEMENT MUST BE PERFORMED BY A LICENSED CONTRACTOR.

T. PRIOR TO CONSTRUCTION/DEMOLITION THE GENERAL CONTRACTOR SHALL SUBMIT A PHASING PLAN/SCHEDULE TO OWNER FOR APPROVAL. THE PLAN SHALL ADDRESS THE REQUIREMENT THAT THE DEALERSHIP FACILITIES REMAIN OPERATIONAL DURING CONSTRUCTION.

U. ABANDONMENT OR RELOCATION OF EXISTING MONITORING WELLS SHALL BE DONE BY OTHERS. GENERAL CONTRACTOR SHALL COORDINATE THIS WORK.

EROSION CONTROL NOTES

1. THE PERIMETER CONTROLS (SILT FENCE, TURBIDITY BARRIERS AND HAY BALES) SHALL BE INSTALLED AROUND THE ENTIRE AREA TO BE DISTURBED, AS SHOWN.
2. HAY BALES TO BE PROVIDED AROUND THE NEW CATCH BASINS IMMEDIATELY AFTER THE BASINS ARE INSTALLED AND TEMPORARILY REMOVED FOR PAVEMENT INSTALLATION.
3. HAY BALE BARRIERS SHALL BE PROVIDED IN EXISTING UPLAND DITCHES DURING PIPE PLACEMENT AND DITCH FILLING OPERATIONS. SEE DETAIL THIS SHEET.
4. WASTE, SUCH AS DISCARDED BUILDING MATERIALS, CHEMICALS, LITTER OR SANITARY WASTE ARE TO BE PROPERLY CONTROLLED AND NOT DISCHARGED TO THE DRAINAGE DITCHES.
5. TRUCKING OF SEDIMENTS AND GENERATION OF DUST BY OFF-SITE VEHICLES SHALL BE MINIMIZED.
6. PROVIDE TEMPORARY DISTURBED AREA STABILIZATION BY SPREADING RYE GRASS SEED AT THE RATE OF 168 LBS PER ACRE. THE APPLICATION, GENERATION AND MIGRATION OF TOXIC SUBSTANCES SHALL BE LIMITED AND PROPERLY STORED AND DISPOSED OF.
7. EROSION CONTROL DEVICES SHALL BE MAINTAINED IN PROPER WORKING ORDER THROUGHOUT THE CONSTRUCTION. MAINTENANCE SHALL BE PERFORMED AS NEEDED. DEVICES SHALL BE REPAIRED AND/OR REPLACED AS REQUIRED. MATERIAL SHALL BE REMOVED WHEN SEDIMENT BUILD-UP REACHES 50% OF THE HEIGHT OF THE DEVICE.
8. ALL EFFORTS MUST BE UNDERTAKEN TO PREVENT ANY EROSION OR TURBID WATER FROM BEING DISCHARGED INTO WETLANDS AND/OR WATERS OF THE COUNTY. TURBID DISCHARGES THAT EXCEED 50 JTU'S (JACKSON TURBIDITY UNITS) OR 29 NTU'S (NEPHELOMETRIC TURBIDITY UNITS) ABOVE BACKGROUND LEVELS SHALL NOT BE EXCEEDED. HAY BALES, SILT FENCES OR OTHER EPC APPROVED METHODS OF EROSION/TURBIDITY CONTROL ARE REQUIRED. CONTROLS SHOWN ARE MINIMUM REQUIREMENTS. INSTALLATION AND MAINTENANCE OF ADEQUATE CONTROLS SHALL BE THE RESPONSIBILITY OF THE GENERAL CONTRACTOR. CONTROLS SHALL BE MAINTAINED IN GOOD CONDITION THROUGHOUT THE CONSTRUCTION PROCESS AND UNTIL ALL LOOSE SOILS HAVE STABILIZED. CONTROL DEVICES SHALL BE INSPECTED REGULARLY AND MODIFIED AS REQUIRED FOR PROPER OPERATION.

EROSION CONTROL

TREE BARRICADES AND EROSION CONTROL: ALL EROSION CONTROL MEASURES (SILT BARRIERS) AND TREE BARRICADES MUST BE INSTALLED PRIOR TO THE START OF CONSTRUCTION AND REMAIN IN PLACE THROUGHOUT CONSTRUCTION. ENCROACHMENT OR FAILURE TO MAINTAIN THESE BARRICADES COULD RESULT IN ENFORCEMENT ACTION WHICH MAY INCLUDE CITATIONS AND/OR PERMIT REVOCATION. SILTATION BARRIERS SHALL BE MAINTAINED AND REPAIRED AT THE END OF EACH WORKING DAY. HAY BALES SHALL BE INSTALLED ONCE PERIMETER GRADING IS COMPLETED. STORMWATER FACILITIES SHALL HAVE HAY BALES PLACED AROUND THEIR ENTRANCES TO PREVENT SEDIMENT FROM BEING TRANSPORTED INTO THE STORMWATER SYSTEM. HAY BALES SHALL BE PLACED ALONG THE PERIMETER OF ALL DOWNSTREAM BOUNDARIES TO PROVIDE FILTRATION OF RUNOFF DURING CONSTRUCTION. THE HAY BALES SHALL REMAIN IN PLACE UNTIL THE ENGINEER HAS APPROVED THE VEGETATIVE COVER ALONG EMBANKMENTS PROVIDING RUNOFF TO THE PERIMETER. IT IS THE CONTRACTOR'S RESPONSIBILITY TO MAINTAIN SOIL EROSION CONTROL DEVICES. IF AT ANY TIME DRAINAGE STRUCTURES OR EROSION CONTROL DEVICES BECOME DAMAGED OR INOPERABLE, IT IS THE CONTRACTORS RESPONSIBILITY TO REPAIR THEM.

THE CONTRACTOR IS EXPECTED, AT THE END OF EACH DAY, TO HAVE THE SITE GRADED IN SUCH A WAY THAT ADJACENT PROPERTIES ARE NOT ADVERSELY IMPACTED BY EROSION OR SEDIMENT LEAVING THE SITE. CLEARED AREAS SHALL BE STABILIZED EARLY IN THE CONSTRUCTION PROCESS AND IF NATURAL PRECIPITATION DOES NOT PROVIDE PERIODIC WETTING OF THE SITE, THEN THE CONTRACTOR SHALL PROVIDE A METHOD OF SPRAYING THE SITE TO PREVENT WIND EROSION. CONTRACTOR SHALL CLEAR ONLY THAT AREA SHOWN TO BE CLEARED ON THE PLAN. CARE SHALL BE TAKEN TO DISTURB THE EXISTING VEGETATION IN ONLY THOSE AREAS UNDER CONSTRUCTION AT THAT TIME.

ALL CLEAR SITE AREAS SHALL BE KEPT FREE OF ANY SIGNAGE, PLANTINGS, TREES, ETC. IN EXCESS OF THREE-AND-A-HALF (3 1/2) FEET IN HEIGHT. DURING LAND ALTERATION AND CONSTRUCTION ACTIVITIES, IT SHALL BE UNLAWFUL TO REMOVE VEGETATION BY GRUBBING OR TO PLACE SOIL DEPOSITS, DEBRIS, SOLVENTS, CONSTRUCTION MATERIAL, MACHINERY OR OTHER EQUIPMENT OF ANY KIND WITHIN THE DRIP LINE OF A TREE TO REMAIN ON THE SITE UNLESS OTHERWISE APPROVED BY THE LOCAL GOVERNMENT. ALL TREE ROOTS EXISTING WITHIN APPROVED IMPROVEMENT AREAS AND ORIGINATING FROM A PROTECTED TREE SHALL BE SEVERED CLEAN AT THE LIMITS OF THE PRESERVED AREA. ALL TRIMMING UNDERTAKEN ON A TREE PROTECTED BY THE PROVISIONS OF THE LAND DEVELOPMENT CODE SHALL BE PRUNED IN ACCORDANCE WITH THE NATIONAL ARBORIST ASSOCIATION (NAA) PRUNING STANDARDS.

GENERAL NOTES

A. THE LOCATIONS, ELEVATIONS AND DIMENSIONS OF EXISTING UTILITIES, STRUCTURES AND OTHER FEATURES ARE SHOWN ACCORDING TO THE BEST INFORMATION AVAILABLE AT THE TIME OF THE PREPARATION OF THESE PLANS BUT DO NOT PURPORT TO BE ABSOLUTELY CORRECT. THE CONTRACTOR SHALL FIELD VERIFY THE LOCATIONS, ELEVATIONS AND DIMENSIONS OF ALL EXISTING UTILITIES, STRUCTURES AND OTHER FEATURES AFFECTING HIS WORK PRIOR TO BIDDING AND DETERMINE THE EXACT LOCATION OF THE UTILITIES PRIOR TO CONSTRUCTION. THE CONTRACTOR SHALL NOTIFY SUNSHINE @ (800)432-4770 AND THE UTILITY COMPANIES IN THE AREA AT LEAST 48 HOURS BEFORE COMMENCING WORK. REPAIR AND REPLACEMENT OF ALL PRIVATE AND PUBLIC PROPERTY AFFECTED BY THIS WORK SHALL BE RESTORED TO A CONDITION EQUAL TO OR BETTER THAN EXISTED BEFORE COMMENCING CONSTRUCTION UNLESS SPECIFICALLY EXEMPTED BY THE PLANS. COST TO BE INCIDENTAL TO OTHER CONSTRUCTION AND NO EXTRA COMPENSATION TO BE ALLOWED. THE INFORMATION CONTAINED ON THIS EXISTING CONDITIONS PLAN WAS PROVIDED BY THE SURVEYOR - SPRING ENGINEERING, INC. ASSUMES NO RESPONSIBILITY FOR ITS ACCURACY OR COMPLETENESS.

B. ALL WORK SHALL BE LEFT IN SUCH A MANNER THAT IT IS SAFE TO THE PUBLIC. THE CONTRACTOR SHALL MAINTAIN TRAFFIC AT ALL TIMES. SIGNS AND BARRICADES TO BE ACCORDING TO F.D.O.T. MANUAL OF SAFE PRACTICES; REFERENCE F.D.O.T. INDEXES 600 THROUGH 650 AND 17349 PER ROADWAY AND TRAFFIC DESIGN STANDARDS LATEST EDITION OF D.C. INDEXES 100 THROUGH 116.

THERE WILL BE NO ON-SITE BURNING.

C. THE CONTRACTOR SHALL REFER TO THE CONTRACT DOCUMENTS FOR ADDITIONAL CONTROL AND SCOPE OF WORK. THE CONTRACTOR SHALL PROVIDE SPRING ENGINEERING, INC. WITH AS-BUILT DRAWINGS AND SURVEYS UPON COMPLETION OF ALL WORK.

D. THE CONTRACTOR IS REQUIRED TO HAVE A LICENSED PROFESSIONAL SURVEYOR DO ALL BUILDING LAYOUT, CURB & ROADWAY, AND GRADE STAKING. THE CONTRACTOR SHALL VERIFY ALL DIMENSIONS IN THE FIELD AND REPORT ANY DISCREPANCIES TO THE ENGINEER PRIOR TO STARTING ANY WORK. THE CONTRACTOR SHALL CONTACT THE ENGINEER'S OFFICE IMMEDIATELY ON ANY CONFLICTS ARISING DURING CONSTRUCTION OF ANY IMPROVEMENTS SHOWN ON THESE DRAWINGS. IT SHALL BE THE CONTRACTOR'S RESPONSIBILITY TO CONSULT WITH THE ENGINEER FOR MAKING ANY AND ALL REQUIRED INTERPRETATIONS OF THE PLANS; HOWEVER, THIS IN NO WAY RELIEVES THE CONTRACTOR OF HIS RESPONSIBILITY FOR CONSTRUCTING THE PROJECT TO ACCOMPLISH THE INTENT OF THE PLANS. ALL ELEVATIONS REFER TO NORTH AMERICAN VERTICAL DATUM OF 1988. MEAN SEA LEVEL = 0.00.

E. PERMITS: NO CONSTRUCTION SHALL COMMENCE UNTIL ALL APPLICABLE PERMITS HAVE BEEN APPROVED. A RIGHT-OF-WAY USE PERMIT IS REQUIRED PRIOR TO THE COMMENCEMENT OF ANY CONSTRUCTION ACTIVITY WITHIN THE RIGHT-OF-WAY, AND NO IRRIGATION SYSTEM OR LANDSCAPING SHALL BE INSTALLED IN ANY PUBLIC RIGHT-OF-WAY WITHOUT ISSUANCE OF APPROPRIATE PERMIT. ALL PROPOSED SIGNS MUST BE APPLIED FOR, APPROVED AND PERMITTED ON AN INDIVIDUAL BASIS APART FROM ANY ULTIMATELY APPROVED SITE PLAN; APPROVAL OF THIS SITE PLAN DOES NOT CONSTITUTE APPROVAL OF ANY SIGN.

NPDES SOIL EROSION CONTROL AND POLLUTION PREVENTION NOTES

ALL EROSION CONTROL DEVICES SHALL BE INSTALLED IN ACCORDANCE WITH ALL LOCAL, STATE AND FEDERAL STANDARDS. AN EPA EQUIVALENT NOTICE OF INTENT LETTER SHALL BE POSTED IN THE JOB TRAILER AT ALL TIMES. THIS SITE SHALL BE PROTECTED BY MEANS DESCRIBED IN THE ACCOMPANYING PLANS. IF THERE ARE ANY QUESTIONS REGARDING EROSION CONTROL MEASURES, THE CIVIL ENGINEER OF RECORD MUST BE CONTACTED.

A COPY OF THIS SHEET AND THE EROSION CONTROL PLAN MUST BE KEPT ON-SITE THROUGH THE DURATION OF CONSTRUCTION ACTIVITY. ANY CHANGES MADE TO THIS PLAN MUST BE NOTED, DATED, AND INITIALED BY THE GENERAL CONTRACTOR.

I. GENERAL

THE PROJECT IS FOR THE CONSTRUCTION OF TWO WAREHOUSE/OFFICE BUILDINGS WHICH ARE 51,739 SF AND 77,771 SF, ASSOCIATED PARKING, TRUCK DOCKING AREAS AND DRIVEWAYS, ENTRY ROAD FROM COUNTY ROAD 54 TO PET LANE, WETLAND MITIGATION AREA AND ASSOCIATED UTILITY INFRASTRUCTURE.

THE INTENT OF THIS PLAN IS TO CONTROL EROSION AND RESULTING SILT TRANSPORTATION OFF SITE. THE ITEMS INDICATED ARE THE ENGINEERS BEST ESTIMATE OF REQUIREMENTS. MORE CONTROL MAY BE NEEDED DEPENDING ON SITE CONDITIONS, SEASON, ETC. CONTRACTOR SHALL INSTALL ADDITIONAL MEASURES AS NECESSARY TO COMPLY WITH THIS INTENT. ALL CHANGES TO THE STORMWATER POLLUTION PREVENTION PLAN (SWPPP) MUST BE NOTED.

A. BEST MANAGEMENT PRACTICES PLAN WITH ALL SEDIMENT AND EROSION CONTROL PLANS SHALL BE KEPT ON-SITE WITH COPIES OF ALL INSPECTION REPORTS.

B. EXISTING TOPOGRAPHY AND PROPOSED TOPOGRAPHY ARE SHOWN ON THE GRADING PLAN.

C. SEDIMENT AND EROSION CONTROL MEASURES SHALL BE CONSTRUCTED PRIOR TO ANY LAND DISTURBING ACTIVITY TAKING PLACE.

D. OTHER LOCAL, STATE OR FEDERAL STATUTES OR REQUIREMENTS THAT MAY AFFECT THE PERMIT REQUIREMENTS FOR THIS SITE:

1. NPDES CONSTRUCTION STORM WATER MANAGEMENT DISCHARGE CRITERION
2. UNITED STATES ARMY CORPS OF ENGINEERS
3. LOCAL SEDIMENT CONTROL ORDINANCES
4. HAZARDOUS WASTE CONCERNS
5. PROTECTED SPECIES, HISTORICAL PRESERVATION, ETC.

E. MATERIAL NEEDS AFFECTING ENVIRONMENTAL ASPECTS OF THE SITE

1. HAUL-IN/HAUL-OFF
2. TOPSOIL SPOIL OR HAUL-IN

F. PLANNED PHASES OF CONSTRUCTION

1. FLAG ALL WORK LIMITS.
2. CALL THE STATE UTILITY PROTECTION SERVICE TO VERIFY LOCATION OF ANY EXISTING UTILITIES TWO (2) WORKING DAYS PRIOR TO START OF CONSTRUCTION.
3. NOTIFY SEDIMENT CONTROL INSPECTOR TWENTY-FOUR (24) HOURS PRIOR TO START OF CONSTRUCTION.
4. IDENTIFY AND PROTECT ALL EXISTING VEGETATION TO REMAIN.
5. PERFORM CLEARING AND GRADING REQUIRED FOR INSTALLATION OF PERIMETER CONTROLS.
6. INSTALL PERIMETER RUNOFF CONTROLS. NOTIFY SEDIMENT CONTROL INSPECTOR AND OBTAIN APPROVAL BEFORE PROCEEDING FURTHER.
7. INSTALL STORM DRAINAGE PROTECTION.
8. CLEAR AND STABILIZE CONSTRUCTION ACCESS.
9. COMPLETE ALL REQUIRED STOCKPILING, SITE CLEARING AND GRADING.
10. APPLY TEMPORARY OR PERMANENT STABILIZATION MEASURE IMMEDIATELY ON ALL DISTURBED AREAS WHERE WORK MAY BE DELAYED OR IS COMPLETE. DO NOT LEAVE LARGE AREAS UNPROTECTED FOR MORE THAN SEVEN (7) DAYS.
11. CONSTRUCT PARKING LOT BASE, BUILDING FOUNDATION AND INSTALL SITE UTILITIES.
12. WEATHER-IN BUILDING.
13. COMPLETE PARKING LOT CONSTRUCTION.
14. COMPLETE FINAL GRADING, STABILIZATION AND LANDSCAPING.
15. NOTIFY SEDIMENT CONTROL INSPECTOR AND OBTAIN APPROVAL TO REMOVE SEDIMENT AND EROSION CONTROL MEASURES.

II. IMPLEMENTATION

PLANNED CONSTRUCTION PHASING AND SPECIFIC REQUIRED SEDIMENT AND EROSION CONTROL MEASURES.

A. PHASE 1: TOPSOIL STRIPPING AND STOCKPILING - THIS IS THE PHASE AFTER ALL DEBRIS REMOVAL. TOPOSOIL WILL BE STRIPPED AND STOCKPILED ON THE SITE. THE FOLLOWING REQUIREMENTS WILL APPLY DURING THIS PHASE OF CONSTRUCTION.

1. CONSTRUCTION OF AN FDOT SOIL TRACKING PREVENTION DEVICE TYPE A INDEX 106 SHALL BE COMPLETED TO PREVENT SILT FROM BEING DEPOSITED ON ROADWAYS.
2. SILT FENCES AND/OR DIVERSIONS DIRECTING RUNOFF TO TEMPORARY SEDIMENT BASINS SHALL BE PLACED ON THE DOWNHILL SIDE OF WHEREVER DIRT HAS BEEN DISTURBED BY GRADING TO PREVENT SILT FROM LEAVING THE SITE. SPECIFIC ATTENTION SHOULD BE PAID TO CULVERTS AND CONSTRUCTION ENTRANCES.
3. ALL DEBRIS SHALL BE KEPT AWAY FROM DITCHES AND STREAMS TO PREVENT RUNOFF ACCUMULATION WILL NOT CARRY DEBRIS DOWNSTREAM.
4. SILT FENCES OR DOUBLE SILT FENCES SHALL BE INSTALLED ALONG THE LOW SIDE OF THE SITE WHERE RUN-OFF FROM THE WORK AREA WILL LEAVE THE SITE OR ENTER A DITCH.
5. SILT TRAPS AND SEDIMENT BASINS SHALL BE INSTALLED WHERE/IF SHOWN ON THE PLANS IN ACCORDANCE WITH DETAILS SHOWN TO CATCH AND FILTER RUN-OFF PRIOR TO DISCHARGE FROM THE SITE.
6. ADDITIONAL SILT FENCING AROUND THE STOCKPILE AREA SHOULD BE INSTALLED TO PREVENT SILT WASH OFF FROM THE SITE.

B. PHASE 2: GRADING OPERATIONS - THIS PHASE IS THAT TIME WHEN EARTH IS BEING MOVED FROM ONE PORTION OF THE SITE TO ANOTHER OR IS BEING HAULED INTO OR HAULED OFF FROM THE SITE. THIS IS A CRITICAL TIME WHEN SEDIMENT AND EROSION CONTROL FACILITIES MUST BE CONTINUALLY CHECKED TO ENSURE EFFECTIVENESS. MEASURES SHOULD BE CHANGED OUT AS OFTEN AS REQUIRED TO MEET DEMANDS OF CURRENT SITE CONDITIONS. THE FOLLOWING WILL APPLY TO THIS STAGE OF CONSTRUCTION.

1. ALL SEDIMENT CONTROL FACILITIES REQUIRED AND INSTALLED DURING PHASE 1 SHALL BE LEFT IN PLACE AND MAINTAINED AS APPROPRIATE.
2. WHENEVER A SILT CONTROL FACILITY IS REMOVED BECAUSE OF CHANGING SITE CONDITIONS IT SHALL BE IMMEDIATELY REPLACED WITH ANOTHER MEASURE OF EQUAL OR GREATER EFFECTIVENESS THAT WILL CONTRIBUTE TO THE PROGRAM OF SILT AND EROSION CONTROL.
3. CUT SLOPES SHALL BE PROTECTED BY CONSTRUCTING SWALES AT THE TOP OF CUT SLOPES TO INTERCEPT RUN-OFF. SWALES WILL BE CONSTRUCTED WITH RIP-RAP CHECK DAMS OR SILT FENCES AS NECESSARY TO PREVENT EROSION AND SILTATION.
4. FILL SLOPES SHALL BE PROTECTED BY THE CONSTRUCTION OF BERMS AT THE TOP OF ALL FILL SLOPES TO PREVENT UNCONTROLLED RUN-OFF DRAINING DOWN FACE OF SLOPES.
5. WHEN SHOWN ON PLAN, RUN-OFF DIRECTING BERMS FOR UPGRADE RUN-OFF SHALL BE CONSTRUCTED ALONG SLOPE TO DRAINS THAT WILL CARRY RUN-OFF DOWN THE SLOPE. SLOPE DRAINS SHALL HAVE INLET SILT PROTECTION TYPICAL OF OTHER SITE STORM INLET PROTECTION.
6. SILT FENCES SHALL BE IN PLACE AT THE TOE OF ALL FILL SLOPES.
7. TERRACES, BERMS AND SWALES SHALL BE CONSTRUCTED AT INTERMEDIATE LOCATIONS THROUGHOUT THE SITE AS NECESSARY TO CONTROL EROSION AND SEDIMENT TRANSPORT. THESE DIVERSION FACILITIES SHALL BE SUPPLEMENTED AS APPROPRIATE WITH SILT FENCES AND RIP-RAP FILTER BERMS TO FILTER ACCUMULATED SEDIMENT FROM RUN-OFF PRIOR TO DISCHARGE FROM THE SITE.
8. SLOPES (CUT AND FILL) THAT ARE CONSTRUCTED IN THE FINAL CONFIGURATION SHALL BE COVERED WITH FOUR INCHES (4") OF TOPSOIL AND GRASSED AND MULCHED AS SOON AS GRADING IS COMPLETED. THIS GROWING VEGETATION WILL GIVE ADDED PROTECTION TO THE SLOPE.
9. PORTIONS OF THE SITE THAT ARE GRADED TO FINAL GRADE AND ARE NOT TO RECEIVE PAVEMENT OR BUILDINGS SHOULD HAVE FOUR INCHES (4") OF TOPSOIL SPREAD OVER THE SURFACE AND GRASSED AS SOON AS POSSIBLE IN CONSTRUCTION PROCESS. THIS PHASE OF CONSTRUCTION IS CRITICAL IN THE EROSION AND SEDIMENT CONTROL PROCESS.
10. STORM SEWERS SHOULD BE INSTALLED AS SOON AS POSSIBLE IN THE CONSTRUCTION PROCESS AND CONCURRENT TO GRADING OPERATIONS WHENEVER POSSIBLE TO ENSURE A SUCCESSFUL PROGRAM. CONSTRUCTION RUN-OFF SHALL BE DIRECTED TO STORM SEWER SYSTEM AS SOON AS POSSIBLE.

C. PHASE 3: STORM DRAINAGE AND UTILITY INSTALLATION PLAN - THIS PHASE WILL BE COMPLETED AFTER OR CONCURRENT WITH THE GRADING PHASE. THE FOLLOWING WILL APPLY TO THIS PHASE OF CONSTRUCTION.

1. ALL ASPECTS OF THE PREVIOUS PHASES SHALL BE MAINTAINED AS APPLICABLE.
2. STORM SEWERS THAT ARE INSTALLED SHALL BE PUT INTO SERVICE IMMEDIATELY. THE INLETS OF ALL STORM SEWERS SHALL BE PROTECTED WITH SILT TRAPS THAT PREVENT SEDIMENT FROM ENTERING PIPE. THIS PROTECTION CAN BE SILT FENCE OR RIP-RAP FILTER BERMS AS APPLICABLE AND SHOWN ON THE PLANS.
3. RIP-RAP AS SHOWN ON THE PLANS AND AS REQUIRED ON THE SITE WILL BE INSTALLED AT EMERGENCY SPILLWAYS TO PREVENT EROSION DUE TO OUTFLOW WATER VELOCITY. RIP-RAP SHALL BE EXTENDED DOWNSTREAM AS NEEDED TO PREVENT EROSION.
4. ADDITIONAL SILT FENCING SHALL BE INSTALLED AS NECESSARY TO PREVENT EROSION AND SILTATION RESULTING FROM STOCKPILED EXCAVATION MATERIAL FROM UTILITY INSTALLATION OPERATIONS.

D. PHASE 4: FINISH GRADING, CURB AND PAVEMENT INSTALLATION, LANDSCAPING - THIS IS THE WRAP-UP STAGE WHEN ALL TEMPORARY SEDIMENT AND EROSION CONTROL MEASURES WILL BE PHASED OUT. THE FOLLOWING WILL APPLY TO THIS PHASE:

1. ALL FACILITIES WILL BE MAINTAINED, MODIFIED OR REMOVED WHEN APPROPRIATE.
2. SILT TRAPS AROUND DRAINAGE INLETS WILL BE MAINTAINED, MODIFIED AS NECESSARY AND REMOVED WHEN APPROPRIATE.
3. ALL AREAS NOT RECEIVING PAVEMENT OR BUILDINGS SHALL HAVE FOUR INCHES (4") OF TOPSOIL SPREAD OVER THE AREA AND GRASSED, OR HAVE LANDSCAPING, MULCHING AND/OR SOD INSTALLED PER THE PLANS.
4. CONTRACTOR MAY TEMPORARILY COVER SOME AREAS WITH 2½" THICK GRADED AGGREGATE IN LIEU OF GRASSING FOR TEMPORARY EROSION CONTROL.

E. LANDSCAPING / SEEDING

REFER TO LANDSCAPING PLAN FOR ACTUAL REQUIREMENTS FOR THE INSTALLATION OF LIME, FERTILIZER, SEED AN MULCH. GRASSING OPERATIONS SHALL BE COMPLETED THROUGHOUT CONSTRUCTION PROCESS AT THOSE TIMES WHEN PORTIONS OF THE SITE ARE FINISHED AND READY FOR PERMANENT GROUND COVER. THIS WILL REQUIRE MULTIPLE EFFORTS BY THE GRASSING SUBCONTRACTOR TO STABILIZE ALL IMPACTED AREAS OF THE SITE IN AN ORDERLY FASHION. NO AREA OF THE SITE THAT RECEIVES FINAL GRADE SHALL BE LEFT FOR MORE THAN SEVEN (7) DAYS WITHOUT THE APPLICATION OF SEED AND MULCH.

F. INSPECTION AND MAINTENANCE INSTRUCTIONS:
THE FOLLOWING WILL APPLY TO MAINTAINING EROSION AND SEDIMENT CONTROL FACILITIES:

1. ALL EROSION AND SEDIMENT CONTROL FACILITIES SHALL BE INSPECTED REGULARLY TO ENSURE THEY ARE EFFECTIVE IN THE EVENT OF RAINFALL. MEASURES SHALL BE INSPECTED ONCE A WEEK (MINIMUM) AND WITHIN TWENTY-FOUR (24) HOURS AFTER EACH RAINFALL EVENT THAT IS 0.5" INCHES OR GREATER. ANY DAMAGED OR NONFUNCTIONAL FACILITY SHALL BE REPAIRED OR REPLACED IMMEDIATELY. INSPECTION REPORTS SHALL BE KEPT ON FILE IN THE CONSTRUCTION TRAILER. REQUEST A COPY OF AN ACCEPTABLE INSPECTION FORM FROM THE ENGINEER OF RECORD.
2. SEDIMENT TRAPS SHALL BE CHECKED REGULARLY FOR SEDIMENT CLEANOUT. SEDIMENT SHALL BE REMOVED AND THE TRAP RESTORED TO ITS ORIGINAL DIMENSIONS WHEN THE SEDIMENT HAS ACCUMULATED TO ONE-HALF (½) THE DESIGN VOLUME OF THE WET STORAGE. SEDIMENT REMOVED FROM THE TRAP SHALL BE DEPOSITED IN SUITABLE AREAS AND IN SUCH A MANNER THAT IT WILL NOT ERODE AND CAUSE CONTINUED SEDIMENTATION PROBLEMS.
3. GRAVEL OUTLETS AND CHECK DAMS SHALL BE INSPECTED REGULARLY FOR SEDIMENT BUILDUP WHICH WILL PREVENT DRAINAGE. IF THE GRAVEL IS OBSTRUCTED BY SEDIMENT. IT SHALL BE REMOVED AND CLEANED OR REPLACED.
4. SILT FENCE BARRIERS SHALL BE CHECKED REGULARLY FOR UNDERMINING OR DETERIORATION OF THE FABRIC. SEDIMENT SHALL BE REMOVED WHEN THE LEVEL OF DEPOSIT REACHES ONE-THIRD THE HEIGHT OF THE BARRIER.
5. SEEDED AREAS SHALL BE CHECKED REGULARLY TO ENSURE A GOOD STAND IS MAINTAINED. AREAS SHOULD BE FERTILIZED AND RE-SEEDED AS NECESSARY.
6. IF ANY FACILITY IS DAMAGED DURING MAINTENANCE OR OTHERWISE, THE DAMAGED PORTION SHALL BE REMOVED AND REPLACED ACCORDING TO THE ASSOCIATED DETAIL.
7. IF SILT HAS OBSTRUCTED THE SEDIMENT CONTROL FACILITY TO THE POINT OF ELIMINATING ALL FILTERING EFFECTIVENESS, THE STRUCTURE SHALL BE REMOVED AND REPLACED WITH A NEW STRUCTURE IN ACCORDANCE WITH THE ASSOCIATED DETAIL.
8. CONSTRUCTION STAGING AREA SHALL HAVE ADDITIONAL STONE ADDED AS MUD COVERS STONE. UNDER WET SOIL CONDITIONS, TIRES SHALL BE WASHED PRIOR TO ENTERING A PAVED ROADWAY.
9. QUALIFIED PERSONNEL WILL INSPECT ALL POINTS OF DISCHARGES, ALL DISTURBED AREAS OF CONSTRUCTION THAT HAVE NOT BEEN STABILIZED, CONSTRUCTED AREAS AND LOCATIONS WHERE VEHICLES ENTER AND EXIT THE SITE AT LEAST ONCE EVERY 7 CALENDAR DAYS OR WITHIN 24 HOURS OF THE END OF A RAINFALL EVENT THAT IS 0.5 INCHES OR GREATER. WHERE SITES HAVE BEEN FINALLY STABILIZED, SAID INSPECTIONS SHALL BE CONDUCTED AT LEAST ONCE EVERY MONTH UNTIL THE NOTICE OF TERMINATION IS FILED.

G. MAINTAINING EFFECTIVENESS:

CONTRACTOR SHALL INSPECT OVERALL PERFORMANCE OF EROSION AND SEDIMENT CONTROL FACILITIES AND AREAS DOWNSTREAM. IF SILT IS APPARENT DOWNSTREAM FROM STRUCTURES, SOME FAILURE HAS OCCURRED. IF SEDIMENT IS OBSERVED DOWNSTREAM, NOTIFY THE CIVIL ENGINEER. THE CIVIL ENGINEER WILL INSPECT THE CONDITION AND AFTER INSPECTION, DIRECT THE REMOVAL OF ACCUMULATED SEDIMENT DOWNSTREAM AND ADD ADDITIONAL STRUCTURAL MEASURES AS NECESSARY. CONTRACTOR SHALL IMPLEMENT RECOMMENDED SOLUTIONS TO PROBLEM AREAS AS RECOMMENDED.

III. COMPLETION

A. PROJECT CLOSE OUT:
THE FOLLOWING SHALL BE DONE AT THE END OF THE PROJECT.

1. INSPECT SITE TO ENSURE THAT GROUND COVER IS COMPLETE AND ADEQUATE. ALL AREAS SHOULD BE EITHER PAVED OR HAVE SUFFICIENT GROUND COVER (MINIMUM 80% VEGETATIVE COVER) WITH NO APPARENT EROSION.
2. WHEN GROUND COVER INSPECTION IS MADE AND APPROVED, ALL STRUCTURAL EROSION CONTROL FACILITIES MY BE REMOVED ALONG WITH ANY ACCUMULATED SILT AND DEBRIS. AREAS DISTURBED BY STRUCTURE REMOVAL SHALL BE FINE GRADED, GRASSED, AND MULCHED AS REQUIRED.
3. IF GROUND COVER INSPECTION IS MADE AND PROBLEMS DISCOVERED, PERFORM APPROPRIATE REPAIR MEASURES AND RE-INSPECT PRIOR TO STRUCTURE REMOVAL.
4. ALL CONSTRUCTED AND EXISTING STORM SEWERS SHALL BE INSPECTED UPON REMOVAL OF INLET PROTECTION. STRUCTURES CONTAINING SEDIMENT AND/OR CONSTRUCTION DEBRIS SHALL BE VACUUM CLEANED PRIOR TO FILING NOTICE OF TERMINATION WITH ENVIRONMENTAL PROTECTION AGENCY.

B. MISCELLANEOUS ISSUES

1. NO FUEL OR OIL SHALL BE STORED ON SITE WITHOUT PROPER CONTAINMENT.
2. NO OILS OR GAS SHALL BE DUMPED ON SITE.
3. LOCATION OF TRAILER AND PORTABLE RESTROOM FACILITY SHALL BE FIELD DETERMINED TO AVOID CONSTRUCTION ACTIVITIES. LOCATION SHALL CHANGE DURING CONSTRUCTION AS NECESSARY.
4. IF DE-WATERING OPERATIONS ARE REQUIRED ON THIS PROJECT. PUMPED GROUND WATER SHALL BE ROUTED THROUGH SILT CONTROL FACILITY TO FILTER WATER PRIOR TO DISCHARGE.
5. PROJECT SITE SHALL BE KEPT AS CLEAR OF ALL TRASH AND CONSTRUCTION DEBRIS. CONTRACTOR SHALL HAVE TRASH COLLECTED WEEKLY AND PLACED IN DUMPSTER TO BE HAULED OFF-SITE.
6. ALL WATER SUPPLY WILL BE PROVIDED FROM PUBLIC WATER SUPPLY.
7. ALL HUMAN WASTE SHALL BE COLLECTED IN A PORTABLE RESTROOM FACILITY. WASTES SHALL BE DISPOSED OF BY A LICENSED VENDOR.
8. ANY SPILLED OIL, GAS, ETC. RESULTING FROM CONSTRUCTION ACTIVITIES SHALL BE CONTAINED AND CLEANED IMMEDIATELY. CONTAMINATED SOILS SHALL BE DISPOSED OF IN AN APPROVED MANNER AT A LICENSED LANDFILL.
9. DUST SUPPRESSION OPERATIONS SHALL BE PERFORMED BY MEANS OF A WATER TRUCK DISTRIBUTING A FINE MIST OF WATER ON THE SITE SURFACE. CONCENTRATE STREAMS OF WATER SPRAY SHOULD BE AVOIDED.
10. A DESIGNATED CONCRETE SPOILS AREA SHALL BE IDENTIFIED ON THE SITE. ALL AFFECTED SOILS AND CONCRETE SPOILS IN THIS AREA SHALL BE REMOVED FROM THE SITE UPON COMPLETION OF CONCRETE PLACEMENT ACTIVITIES.
11. ANY NON-STORM DISCHARGES SUCH AS, BUT NOT LIMITED TO , FIRE HYDRANT FLUSHINGS, WASH WATERS, DUST CONTROL, IRRIGATION DRAINAGE, ETC. THAT DO NOT CONTAIN HAZARDOUS MATERIALS SHALL BE PREVENTED FROM ALLOWING SEDIMENT TRANSPORT INTO STORM SEWERS. FLUSHINGS THAT CONTAIN HAZARDOUS MATERIALS SHALL BE PREVENTED FROM ENTERING THE STORM SEWERS AND SHALL BE COLLECTED AND DISPOSED OF IN AN APPROVED MANNER.

B. MISCELLANEOUS ISSUES (CONT.)

12. ALL EROSION CONTROL MEASURES (SILT BARRIERS) MUST BE INSTALLED PRIOR TO THE START OF CONSTRUCTION AND REMAIN IN PLACE THROUGHOUT CONSTRUCTION. ENCROACHMENT OR FAILURE TO MAINTAIN THESE BARRICADES COULD RESULT IN ENFORCEMENT ACTION WHICH MAY INCLUDE CITATIONS AND/OR PERMIT REVOCATION. SILTATION BARRIERS SHALL BE MAINTAINED AND REPAIRED AT THE END OF EACH WORKING DAY. HAY BALES SHALL BE INSTALLED ONCE PERIMETER GRADING IS COMPLETED. STORMWATER FACILITIES SHALL HAVE HAY BALES PLACED AROUND THEIR ENTRANCES TO PREVENT SEDIMENT FROM BEING TRANSPORTED INTO THE STORMWATER SYSTEM. HAY BALES SHALL BE PLACED ALONG THE PERIMETER OF ALL DOWNSTREAM BOUNDARIES TO PROVIDE FILTRATION OF RUNOFF DURING CONSTRUCTION. THE HAY BALES SHALL REMAIN IN PLACE UNTIL THE ENGINEER HAS APPROVED THE VEGETATIVE COVER ALONG EMBANKMENTS PROVIDING RUNOFF TO THE PERIMETER. IT IS THE CONTRACTOR'S RESPONSIBILITY TO REPAIR THEM. THE CONTRACTOR IS EXPECTED, AT THE END OF EACH DAY, TO HAVE THE SITE GRADED IN SUCH A WAY THAT ADJACENT PROPERTIES ARE NOT ADVERSELY IMPACTED BY EROSION OR SEDIMENT LEAVING THE SITE. CLEARED AREAS SHALL BE STABILIZED EARLY IN THE CONSTRUCTION PROCESS AND IF NATURAL PRECIPITATION DOES NOT PROVIDE PERIODIC WETTING OF THE SITE, THEN THE CONTRACTOR SHALL PROVIDE A METHOD OF SPRAYING THE SITE TO PREVENT WIND EROSION.

CHARACTERISTICS OF THE DISCHARGE POINT:

SOILS DATA: FROM USDA WEB SOIL SURVEY - EXISTING SOIL TYPE IS EAUGALLIE FINE SAND AND ZEPHYR MUCK WITH A PERMITTED SEASONAL HIGH WATER TABLE AT ELEVATION 63.08 NAVD AND A NATURAL SLOPE TOWARDS A WETLAND ON THE NORTHWEST SIDE.

DRAINAGE AREA: 12.58 ACRES, THE PARKING LOT AREAS AND DRIVES WILL DRAIN INTO AREA INLETS FROM ASPHALT VEHICULAR AREAS GRADED AT 0.5-3%±.

LATITUDE AND LONGITUDE OF PROJECT: 28°13'23.0" N, 82°22'42.4" W, DISCHARGES INTO AN EXISTING WETLAND ON THE NORTHWEST SIDE OF THE PROPERTY.

CONTROLS FOR OTHER POTENTIAL POLLUTANTS:

ALL CONSTRUCTION MATERIALS AND DEBRIS WILL BE PLACED IN A DUMPSTER AND HAULED OFF SITE TO A LANDFILL OR OTHER DISPOSAL SITE. NO MATERIALS WILL BE BURIED ON SITE.

FERTILIZERS AND PESTICIDES WILL BE USED AT A MINIMUM AND IN ACCORDANCE WITH THE MANUFACTURER'S SUGGESTED APPLICATION RATES.

NON-STORMWATER DISCHARGES:

IT IS EXPECTED THAT THE FOLLOWING NON-STORMWATER DISCHARGES MAY OCCUR FROM THE SITE DURING THE CONSTRUCTION PERIOD: WATER FROM WATER LINE FLUSHING, PAVEMENT WASH WATER (WHERE NO SPILLS OR LEAKS OF TOXIC OR HAZARDOUS MATERIALS HAVE OCCURRED), AND UNCONTAMINATED GROUNDWATER (FROM DEWATERING EXCAVATION). IF SAID DISCHARGES DO OCCUR, THEY WILL BE DIRECTED TO THE RETENTION POND PRIOR TO DISCHARGE. TURBID WATER FROM THE STORMWATER POND SHALL NOT BE PUMPED DIRECTLY INTO THE REGIONAL DITCH. ANY PUMPED WATER FROM THE STORMWATER POND SHALL BE TREATED SO AS TO NOT ALLOW A DISCHARGE OF POLLUTED STORMWATER. TREATMENT CAN INCLUDE SILT FENCES, SETTLING PONDS, THE PROPER USE OF FLOCCULATING AGENTS OR OTHER APPROPRIATE MEANS.

CONTRACTOR/SUBCONTRACTOR CERTIFICATION:

"I CERTIFY UNDER PENALTY OF LAW THAT I UNDERSTAND, AND SHALL COMPLY WITH, THE TERMS AND CONDITIONS OF THE STATE OF FLORIDA GENERIC PERMIT FOR STORMWATER DISCHARGE FROM LARGE AND SMALL CONSTRUCTION ACTIVITIES AND THIS STORMWATER POLLUTION PREVENTION PLAN PREPARED THEREUNDER."

________________________________ ________________________________
CONTRACTOR SUPERVISOR, TITLE — ROSS KIRK
CONTRACTOR COMPANY: — CLW INDUSTRIAL GROUP, LLC

STANDARD PERMIT CONDITIONS:

"I CERTIFY UNDER PENALTY OF LAW THAT THIS DOCUMENT AND ALL ATTACHMENTS WERE PREPARED UNDER MY DIRECTION OR SUPERVISION IN ACCORDANCE WITH A SYSTEM DESIGNED TO ASSURE THAT QUALIFIED PERSONNEL PROPERLY GATHERED AND EVALUATED THE INFORMATION SUBMITTED. BASED ON MY INQUIRY OF THE PERSON OR PERSONS WHO MANAGE THE SYSTEM, OR THOSE PERSONS DIRECTLY RESPONSIBLE FOR GATHERING THE INFORMATION, THE INFORMATION SUBMITTED IS, TO THE BEST OF MY KNOWLEDGE AND BELIEF, TRUE, ACCURATE, AND COMPLETE. I AM AWARE THAT THERE ARE SIGNIFICANT PENALTIES FOR SUBMITTING FALSE INFORMATION, INCLUDING THE POSSIBILITY OF FINE AND IMPRISONMENT FOR KNOWING VIOLATIONS."

____
ROLAND P. DOVE, DIRECTOR OF ENGINEERING
SPRING ENGINEERING, INC.

TREE PROTECTION DETAIL

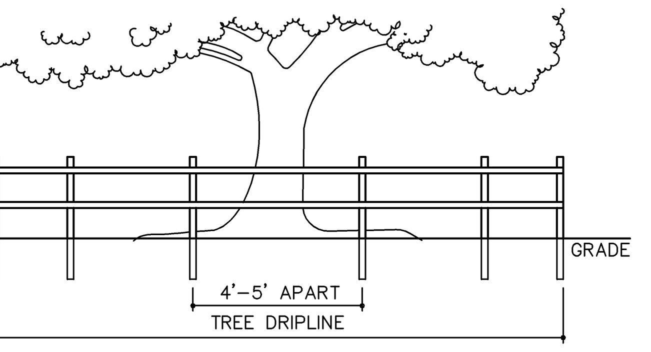

1. VERTICAL MEMBERS TO BE 2"x2" WOOD STAKES.
2. HORIZONTAL MEMBERS TO BE 1"x2" BOARDS.

HAY BALE BARRIER

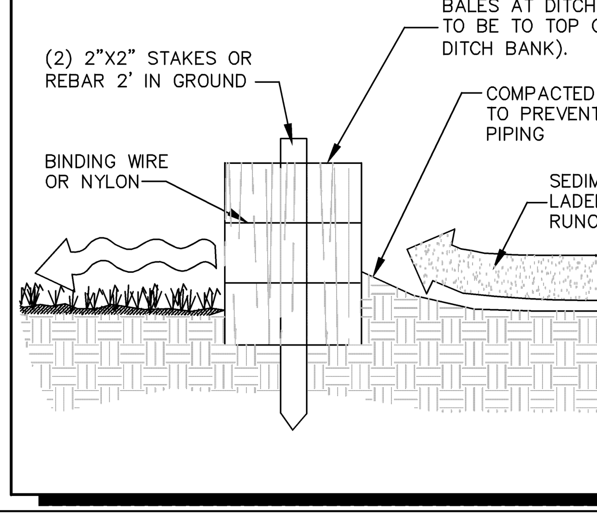

SILT FENCE DETAIL

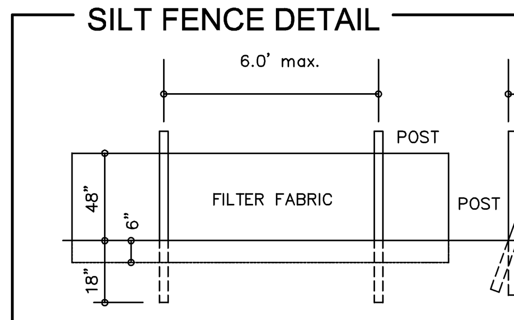

1. FILTER FABRIC TO CONFORM WITH F.D.O.T. SPECIFICATIONS (SEC. 985)
2. POSTS TO BE 2"x4" WOOD POST OR 1.3 LB/FT STEEL POST.
3. POST POSITION TO BE CANTED (20°) OR VERTICAL (90°).
4. DO NOT DEPLOY IN A MANNER THAT SILT FENCE WILL ACT AS A DAM ACROSS PERMANENT FLOWING WATERCOURSES.
5. SILT FENCE WILL NOT BE TRENCHED ANYWHERE ADJACENT TO TREES
6. THE SILT FENCE MUST BE SECURED THROUGH THE PLACEMENT OF FILL OVER THE LOWER LIP OF THE BARRICADE

THIS DRAWING AND THE DESIGN SHOWN ARE THE PROPERTY OF SPRING ENGINEERING, INC. AND ARE NOT TO BE REPRODUCED, COPIED, PUBLISHED, OR USED IN WHOLE OR PART WITHOUT WRITTEN CONSENT. THEY ARE TO BE USED ONLY FOR THE SITE AND PROJECT IDENTIFIED AND SHALL BE RETURNED UPON REQUEST.

100%
CONSTRUCTION PLANS
ISSUE DATE: 10/05/12

REVISIONS

REV	DATE	DESCRIPTION

ROLAND P. DOVE, P.E.
FL REG. No. 36933
DATE

COMPARK 75
LOT 10
Near East Corner of C.R. 54 and Pet Lane
Pasco County, FL 35559

CONTRACT DATE:
May 9, 2012

SPRING ENGINEERING, INC.
ENGINEERING • LAND PLANNING • ARCHITECTURE
3014 U.S. HWY 19, HOLIDAY, FL (727) 938-1516
FL COA NO. 00005158 & LICENSE NO. AIA-C001747

EROSION CONTROL AND NPDES NOTES AND DETAILS

DESIGNED BY: RPD
DRAWN BY: RPD
CHECKED BY: RPD
JOB NO. 2012-28
SHEET NO. C1.2

SECTION 14, TOWNSHIP 26 SOUTH, RANGE 19 EAST
PASCO COUNTY, FLORIDA

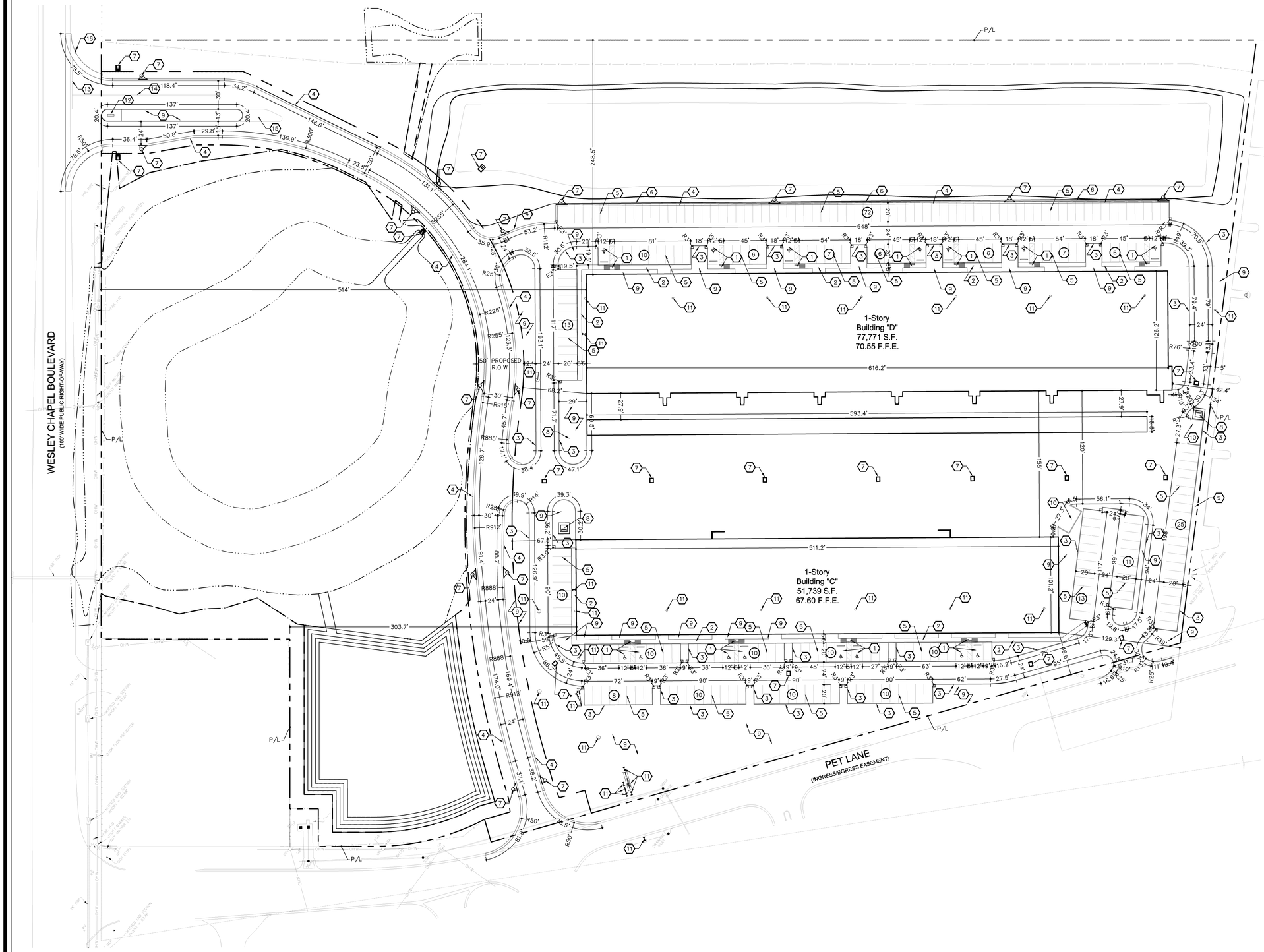

SITE PLAN

SCALE: 1"=50'

0 25 50 100 150

SITE DATA

PROJECT NAME: COMPARK 75 LOT 10

OWNER: HR PASCO, LLP
1102 EAST FLETCHER
TAMPA, FL 33612
PHONE: (813) 349-8544
EMAIL: RKIRK@CLWRG.COM
CONTACT: ROSS KIRK

ENGINEER: SPRING ENGINEERING, INC.
3014 US HIGHWAY 19
HOLIDAY, FLORIDA 34691
PHONE: (727) 938-1516
FAX: (727) 942-4174
EMAIL: SEI2@VERIZON.NET
ROLAND P. DOVE, P.E.
YANCEY B. ABUTON, P.E.

SURVEYOR: CCI SURVEYING AND MAPPING, INC.
4025 CRANBOOK PLACE
NEW PORT RICHEY, FLORIDA 34652
PHONE: (727) 243-5292
FAX: (727) 232-0048
EMAIL: CCI1@TAMPABAY.RR.COM
CHRISTOPHER CHITTUM

PARCEL I.D. NO.: 14-26-19-0000-00300-0050

ADDRESS: NEAR EAST CORNER OF C.R. 54 AND PET LANE
PASCO COUNTY, FL 35559

EXISTING ZONING: I1 (LIGHT INDUSTRIAL PARK)

FUTURE LAND USE: IL (INDUSTRIAL-LIGHT)

FLOOD ZONE: "X", COMMUNITY PANEL 120230 0410 E
(DATED 09-30-92)

SURROUNDING ZONING:

NORTHWEST:	R.O.W.
SOUTHWEST:	I1/EASEMENT
NORTHEAST:	AC
SOUTHEAST:	I1/EASEMENT

SURROUNDING FUTURE LAND USE CLASSIFICATION:

NORTHWEST:	R.O.W.
SOUTHWEST:	IL/EASEMENT
NORTHEAST:	RDR/RES-6
SOUTHEAST:	IL/EASEMENT

PROPOSED BUILDINGS: "D", 1-STORY, 77,771 S.F.
"C", 1-STORY, 51,739 S.F.

PROPOSED HEIGHT: "D" 39'-0" MEASURED FROM THE FFE
"C" 33'-4" MEASURED FROM THE FFE
(MAX. 60' BASED ON PASCO REQ. ONLY)

PROPOSED BUILDING CONSTRUCTION: TYPE IIB - SPRINKLERED

	EXISTING
SITE AREA	876,618 SF (20.12 AC)
TOTAL IMP AREA	0 SF (0.00 AC)
PERVIOUS AREA	876,618 SF (20.12 AC)
	PROPOSED
TOTAL IMP AREA	377,824 SF (8.67 AC)
PERVIOUS AREA	498,794 SF (11.45 AC)

LANDSCAPE BUFFERS - SEE SHEET C5

SETBACKS

NORTHWEST:	25'
SOUTHWEST:	25'
NORTHEAST:	15'
SOUTHEAST:	15'

REQUIRED PARKING: INDUSTRIAL FLEX SPACE, 1 SPACE/500 SF
BUILDING "D": 77,771 SF / 500 SF = 156 SPACES
BUILDING "C": 51,739 SF / 500 SF = 104 SPACES
TOTAL REQUIRED= 260 SPACES
HANDICAP PARKING = 7 SPACES OF 260 SPACES

PROPOSED PARKING:
STANDARD 9'X20' = 252 SPACES
HANDICAP 12'X20' = 15 SPACES
TOTAL PROVIDED = 267 SPACES

SITE KEYNOTES

1. HANDICAP PARKING REFER TO DETAIL ON C2.1.
2. 4" THICK 3000 PSI CONCRETE SIDEWALK PER SIDEWALK DETAIL ON SHEET C2.1.
3. TYPE "D" CURB PER F.D.O.T. INDEX NO. 300
4. TYPE "F" CURB PER F.D.O.T. INDEX NO. 300
5. 4" WHITE ALKYD-READY MIX PAINTED PARKING STRIPE.
6. RETAINING WALL, SEE SHEET C3.1.
7. DRAINAGE STRUCTURE SEE SHEET C3.0 FOR DETAILS.
8. PAD MOUNTED TRANSFORMER, COORDINATE INSTALLATION WITH WITHLACOOCHEE.
9. LANDSCAPE AREA.
10. DUMPSTER PAD AND ENCLOSURE, REFER TO DETAILS ON C2.1.
11. UTILITY STRUCTURE, REFER TO SHEETS C4.0 AND C4.1.
12. SIGN TO BE PERMITTED BY OTHERS.
13. 24" WHITE STOP BAR PER FDOT INDEX 17346.
14. 6" DOUBLE WHITE PER FDOT INDEX 17346.
15. PAVEMENT MARKING FOR TRAFFIC SEPARATION PER FDOT INDEX 17346.
16. R1-1 STOP SIGN PER MUTCD CURRENT EDITION.

THIS DRAWING AND THE DESIGN SHOWN ARE THE PROPERTY OF SPRING ENGINEERING, INC. AND ARE NOT TO BE REPRODUCED, COPIED, PUBLISHED, OR USED IN WHOLE OR PART WITHOUT WRITTEN CONSENT. THEY ARE TO BE USED ONLY FOR THE SITE AND PROJECT IDENTIFIED AND SHALL BE RETURNED UPON REQUEST.

100%
CONSTRUCTION PLANS
ISSUE DATE: 10/05/12

REVISIONS		
REV	DATE	DESCRIPTION

ROLAND P. DOVE, P.E.
FL REG. No. 36353
DATE

COMPARK 75
LOT 10
Near East Corner of C.R. 54 and Pet Lane
Pasco County, FL 35559

CONTRACT DATE:
May 9, 2012

SPRING ENGINEERING, INC.
ENGINEERING • LAND PLANNING • ARCHITECTURE
3014 U.S. HWY 19, HOLIDAY, FL (727) 938-1516
FL COA NO. 00005158 & LICENSE NO. AA-C001747

SITE PLAN

DESIGNED BY: RPD
DRAWN BY: RPD
CHECKED BY: RPD
JOB NO. 2012-28
SHEET NO. C2.0

DUMPSTER ENCLOSURE DETAIL

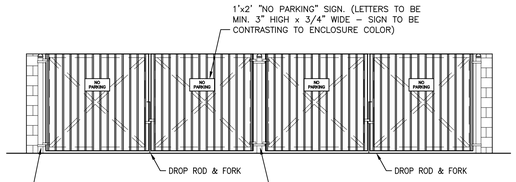

C / C2.1 CMU DUMPSTER DOUBLE ENCLOSURE ELEVATION

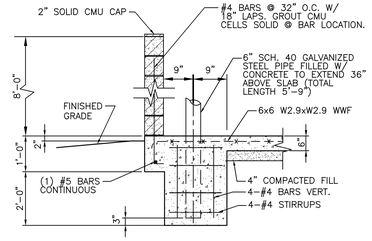

A / C2.1 WALL SECTION

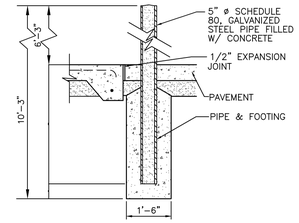

B / C2.1 GATE POST SECTION

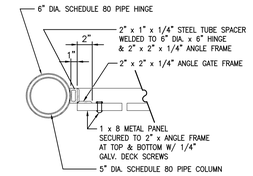

GATE HINGE DETAIL

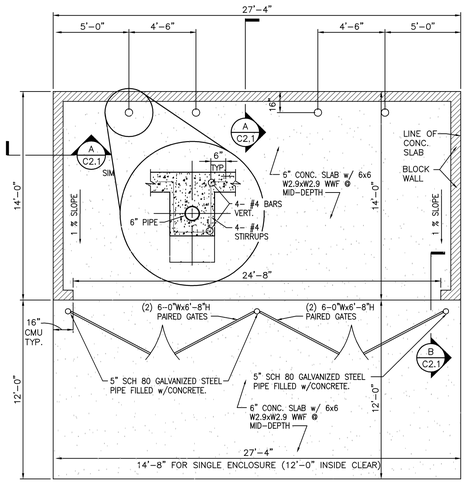

C / C2.1 PLAN VIEW

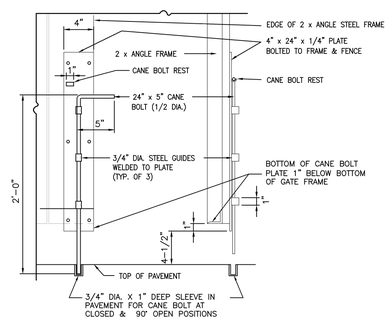

CANE BOLT (1 PER GATE)

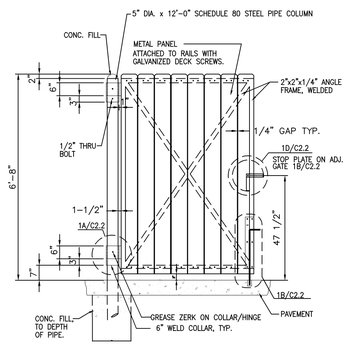

METAL PANEL GATE ELEVATION

(VINYL PANEL GATES MAY BE USED IN PLACE OF METAL PANEL GATES)

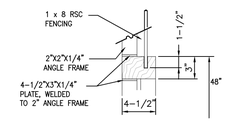

NOTES:
1. MOUNT 48" ABOVE TOP OF PAVEMENT.
2. ALIGN STOP PLATE WITH SWING LATCH.

STOP PLATE (SECTION VIEW)

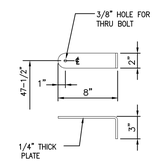

SWING LATCH

NOTE:
1. ALTERNATE ENCLOSURE SIZES MAY BE REQUIRED DUE TO LOCAL DUMPSTER, CONTAINER SIZES AND LOCAL RECYCLING.
2. VERIFY WITH LOCAL SANITATION OFFICIALS TYPICAL TRASH ENCLOSURE SIZE REQUIREMENTS. WHERE RECYCLING FOR ENCLOSURE IS NEEDED IS REQ'D IS TO BE 26'W x 14' DEEP w/ 2 DOUBLE GATES.
3. 5/8" STUCCO APPLIED TO BLOCK WITH PAINTED FINISH TO MATCH BLDG.

SITE GENERAL NOTES

S1. STRIPING: HANDICAPPED PARKING SPACES WILL BE PROPERLY SIGNED AND STRIPED IN ACCORDANCE WITH FLORIDA STATUTE 316, THE MANUAL ON UNIFORM TRAFFIC CONTROL DEVICES, OR OTHER APPLICABLE STANDARDS. ALL ON-SITE PARKING SPACES SHALL BE STRIPED AND SIGNED IN ACCORDANCE WITH THE MANUAL ON UNIFORM TRAFFIC CONTROL DEVICES, LATEST EDITION. PARKING SPACES, DIRECTIONAL ARROWS, AND STOP BARS SHALL BE STRIPED IN WHITE. IT SHALL BE THE OWNER/DEVELOPERS RESPONSIBILITY TO PROPERLY SIGN AND STRIPE THE SITE IN ACCORDANCE WITH APPLICABLE STANDARDS.

S2. CONCRETE: CONCRETE SHALL HAVE A COMPRESSIVE STRENGTH OF 3,000 PSI AT 28 DAYS. PORTLAND CEMENT SHALL CONFORM TO ASTM C150. AGGREGATE SHALL CONFORM TO ASTM C33. WIRE FABRIC SHALL CONFORM TO ASTM A185. READY MIXED CONCRETE SHALL CONFORM TO ASTM C-94. SIX INCH MESH, 10 GAUGE WIRE FABRIC SHALL BE USED IN SLABS THICKER THAN FOUR INCHES. STANDARD THICKNESS SHALL BE FOUR INCHES, EXCEPT AT DRIVEWAYS WHERE THE THICKNESS SHALL BE SIX INCHES. SURFACES SHALL BE FREE FROM TROWEL OR MACHINE MARKS. SURFACE VARIATIONS SHALL NOT EXCEED 1/4 INCH UNDER A 10 FOOT STRAIGHTEDGE. EDGE OF SLABS SHALL HAVE A SMOOTH FINISH. SIDEWALKS SHALL HAVE A BROOM FINISH.

S3. ALL FIRST FLOOR ELEVATIONS SHALL BE A MINIMUM OF 1' ABOVE THE BASE FLOOD ELEVATION OR AS REQUIRED BY THE LCD SECTION 701.

SITE PREPARATION

ALL ORGANIC MATERIAL SHALL BE REMOVED FROM BENEATH THE FOOTINGS, SLABS AND PAVEMENT AND REPLACED WITH COMPACTED INORGANIC GRANULAR BACKFILL. EXCAVATION OF UNSUITABLE MATERIALS SHOULD EXTEND A MINIMUM DISTANCE OF 5' BEYOND THE FOOTPRINT OF THE BUILDING OR EDGE OF PAVEMENT.

FOR ADDITIONAL INFORMATION ON THE REQUIRED SITE PREPARATION REFER TO THE REPORT OF GEOTECHNICAL SUBSURFACE EXPLORATION.

PASCO CO. NOTES

1. INSTALL SOD AT THE BACK OF ALL CURBS, PAVEMENT EDGES, SWALES AND DETENTION AREAS.
2. ROADWAY AND DRAINAGE STRUCTURES SHALL BE 3,000 PSI CONCRETE.
3. ALL DRAINAGE CULVERT JOINTS SHALL BE WRAPPED PER FDOT INDEX 280.
4. PROVIDE PAVED INVERTS IN DRAINAGE STRUCTURES TO PREVENT IMPOUNDED WATER.
5. IN THE EVENT THE CONSTRUCTION SITE IS ABANDONED PRIOR TO PROJECT COMPLETION, CONSTRUCTION AND STOCKPILED VEGETATIVE DEBRIS AND FILL SHALL BE REMOVED FROM THE SITE.
6. THE SITE SHALL BE CONSTRUCTED IN COMPLIANCE WITH THE AMERICANS WITH DISABILITIES ACT AND THE FLORIDA ACCESSIBILITY CODE.
7. ALL TRAFFIC CONTROL SIGNS WITHIN THE RIGHT-OF-WAY WILL BE MANUFACTURED USING DIAMOND GRADE REFLECTIVE SHEETING (OR AN EQUIVALENT). ALL SIGNS SHALL BE CONSTRUCTED IN ACCORDANCE WITH MUTCD CRITERIA FOR SIGN SIZE AND SHAPE AND LETTERING DIMENSIONS.

SIDEWALK DETAIL

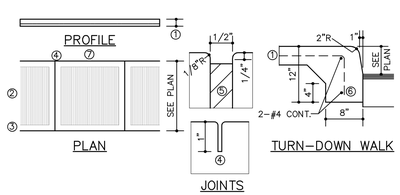

1. CONCRETE SIDEWALK: 4" THICK SLAB ON-SITE AND 6" THICK SLAB OFF-SITE WITH 6x6 #10/10 W.W.M. PLACED 2" ABOVE THE BOTTOM OF THE SLAB.
2. ROUGH BROOM FINISH. (ONSITE SIDEWALKS ONLY)
3. 5" WIDE SMOOTH TROWEL FINISH ALONG SIDEWALK EDGE AND JOINTS.
4. CONTRACTION JOINT: 1/8" WIDE x 1" DEEP, SPACED 5' O.C.
5. CONSTRUCTION JOINT: USE PRE-MOLDED FILLER AT BUILDING & UTILITIES.
6. TURN-DOWN WALK: TERMINATE SIDEWALK ALONG ASPHALT PAVING WITH A THICKENED FOOTING AS SHOWN.
7. OFFSITE SIDEWALK SHALL BE CONSISTANT WITH FDOT INDEX 310.

HANDICAPPED PARKING DETAIL

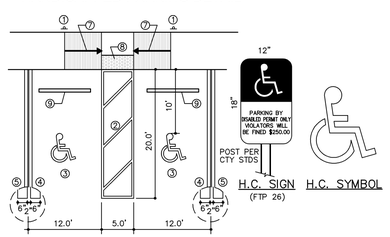

1. BOTTOM OF H.C. SIGN 84" ABOVE GRADE WITH A GALVANIZED METAL POST (ASTM A-499 GRADE 60, ASTM A-123 FINISH). ALL HARDWARE TO BE RUSTPROOF. INSTALL 1' DIA. X 2' DEEP, 3000 PSI CONCRETE FOOTING.
2. 6" WIDE PAINTED STRIPE (WHITE)
3. H.C. SYMBOL: 1 PER SPACE, PAINTED WHITE ON ASPHALT.
4. 6" WIDE PAINTED STRIPE (BLUE)
5. 6" WIDE PAINTED STRIPE (WHITE)
6. ALL BLUE TINTING TO MATCH FEDERAL STANDARD 595e, SHADE 15180.
7. HANDICAP RAMP PER ADA REQUIREMENTS. SLOPE 1:12 AND HAVE A SLIP-RESISTANT SURFACE.
8. DETECTABLE WARNING PER FDOT INDEX 304 AND FDOT SPECIFICATION 527.
9. WHEEL STOP PER WHEEL STOP DETAIL ON SHEET C2.1.

WHEEL STOP DETAIL

1. REQUIRES TWO 5/8" DIA. x 24" LONG STEEL BAR STAKES FOR EACH WHEELSTOP.
2. WHEELSTOP TO BE 3000 PSI CONCRETE AND REINFORCED WITH TWO #3 REBARS.
3. LOCATE WHEELSTOPS 30" FROM EDGE OF PAVEMENT.

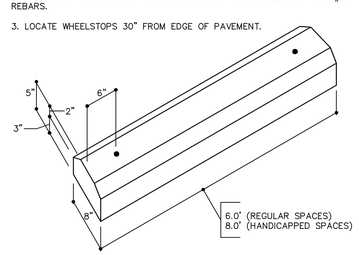

CURB DETAIL

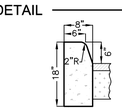

* ALL CURBS: SAW CUT CONTROL JOINTS EVERY 10 FEET.

THIS DRAWING AND THE DESIGN SHOWN ARE THE PROPERTY OF SPRING ENGINEERING, INC. AND ARE NOT TO BE REPRODUCED, COPIED, PUBLISHED, OR USED IN WHOLE OR PART WITHOUT WRITTEN CONSENT. THEY ARE TO BE USED ONLY FOR THE SITE AND PROJECT IDENTIFIED AND SHALL BE RETURNED UPON REQUEST.

100%
CONSTRUCTION PLANS
ISSUE DATE: 10/05/12

REVISIONS

REV	DATE	DESCRIPTION

ROLAND P. DOVE, P.E.
FL REG. No. 36953
DATE

CIOMPARK 75
LOT 10
Near East Corner of C.R. 54 and Pet Lane
Pasco County, FL 35559

CONTRACT DATE:
May 9, 2012

SPRING ENGINEERING, INC.
ENGINEERING • LAND PLANNING • ARCHITECTURE
3014 U.S. HWY 19, HOLIDAY, FL (727) 938-1516
FL COA NO. 00005158 & LICENSE NO. AA-C001747

SITE NOTES AND DETAILS

DESIGNED BY: RPD
DRAWN BY: RPD
CHECKED BY: RPD
JOB NO. 2012-28
SHEET NO. C2.1

SECTION 14, TOWNSHIP 26 SOUTH, RANGE 19 EAST
PASCO COUNTY, FLORIDA

P, G & D KEYNOTES

1. RETAINING WALL. SEE DETAIL ON SHEET C3.1.
2. 8" 4000 PSI STEEL REINFORCED CONCRETE PAD FOR TRAILER LANDING. SEE DETAIL ON SHEET C3.1.
3. HEAVY DUTY ASPHALT. SEE DETAIL ON SHEET C3.1
4. ONSITE ASPHALT. SEE DETAIL ON SHEET C3.1
5. ENTRY ROAD ASPHALT. SEE DETAIL ON SHEET C3.1.

LEGEND

DIRECTION OF FLOW

PROPOSED ELEVATION @ PAVEMENT — x 55.00

EXISTING ELEVATION — 104.63

CATCH BASIN (CB) (SEE DETAIL ON SHEET C2.1)

CONCRETE FLUME (CF) (SEE DETAIL ON SHEET C2.1)

ADS N-12 STORM PIPE

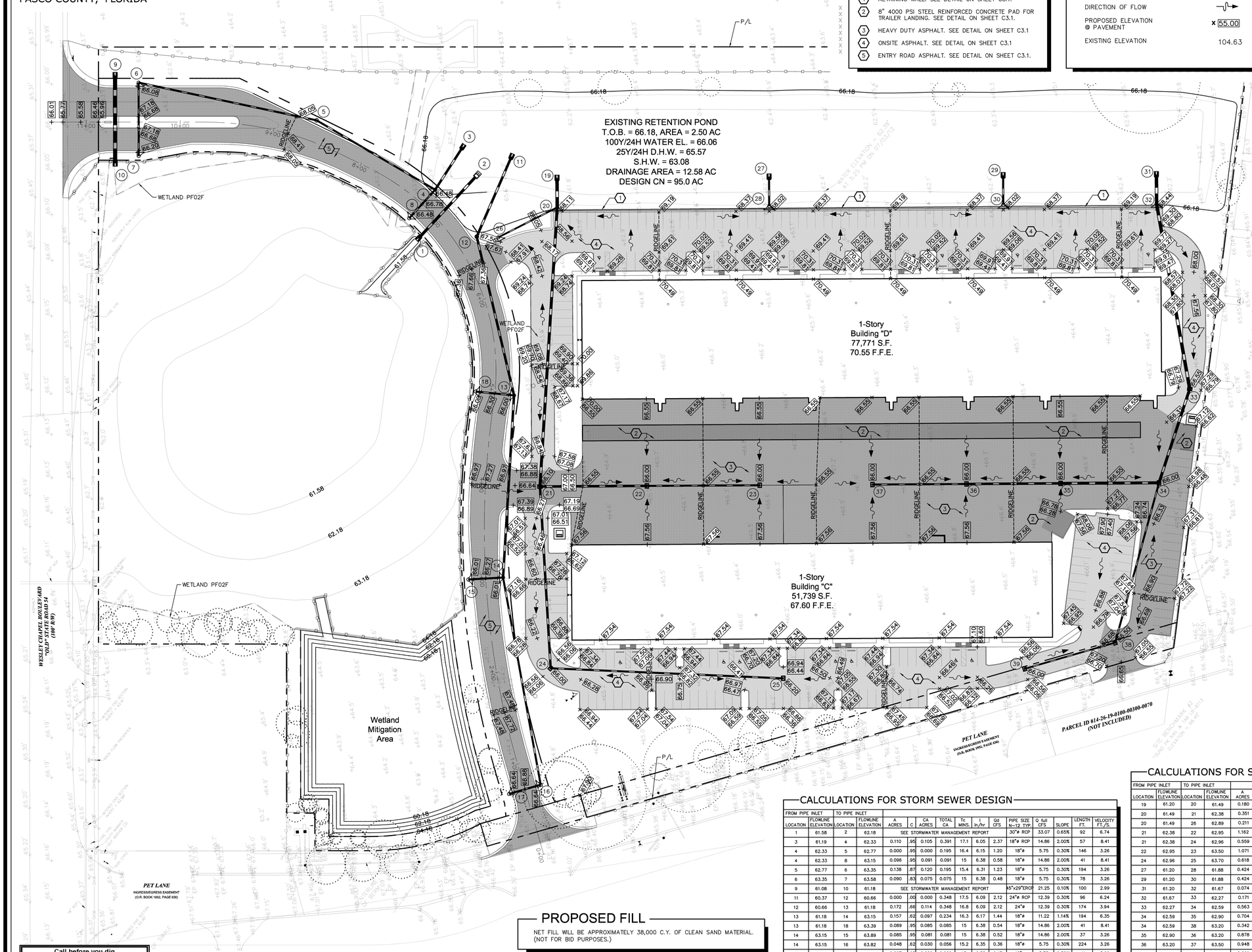

STRUCTURES TABLE

ID #	DESCRIPTION OF STRUCTURE	TOP/RIM ELEVATION	INVERT ELEVATION
1	MES – FDOT IND. #272 SHT.1 OF 2	N/A	61.58
2	POND CONTROL STRUCTURE 2 – MODIFIED INLET TYPE "D" FDOT IND. 232	65.68	62.18 30" RCP 61.58 STRUCTURE
3	MES – FDOT IND. #272 SHT.1 OF 2	N/A	61.19
4	INLET TYPE "4" & 3'6" STRU. BOTTOM TYPE "P" FDOT IND. 200 & 210	66.86	62.33
5	3'6" STRU. BOT. TYPE "P" W. PRECAST CONE TYPE "B" FDOT IND. 200 & 201	66.50	62.77
6	INLET TYPE "3" & 3'6" STRU. BOTTOM TYPE "P" FDOT IND. 200 & 210	66.46	63.35
7	INLET TYPE "3" & 3'6" STRU. BOTTOM TYPE "P" FDOT IND. 200 & 210	66.58	63.58
8	INLET TYPE "4" & 3'6" STRU. BOTTOM TYPE "P" FDOT IND. 200 & 210	66.86	63.15
9	MES – FDOT IND. #272 SHT.1 OF 2	N/A	61.08
10	MES – FDOT IND. #272 SHT.1 OF 2	N/A	61.18
11	MES – FDOT IND. #272 SHT.1 OF 2	N/A	60.37
12	3'6" STRU. BOT. TYPE "P" W. PRECAST CONE TYPE "B" FDOT IND. 200 & 201	67.25	60.66
13	INLET TYPE "4" & 5' STRU. BOTTOM TYPE "J" FDOT IND. 200 & 210	66.38	61.18
14	INLET TYPE "4" & 3'6" STRU. BOTTOM TYPE "P" FDOT IND. 200 & 210	66.39	63.15
15	INLET TYPE "4" & 3'6" STRU. BOTTOM TYPE "P" FDOT IND. 200 & 210	66.39	63.89
16	INLET TYPE "3" & 3'6" STRU. BOTTOM TYPE "P" FDOT IND. 200 & 210	67.02	63.82
17	INLET TYPE "3" & 3'6" STRU. BOTTOM TYPE "P" FDOT IND. 200 & 210	67.02	63.94
18	INLET TYPE "4" & 3'6" STRU. BOTTOM TYPE "P" FDOT IND. 200 & 210	66.38	63.39
19	MES – FDOT IND. #272 SHT.1 OF 2	N/A	61.20
20	INLET TYPE "4" & 6' STRU. BOTTOM TYPE "J" FDOT IND. 200 & 210	68.49	61.49
21	INLET TYPE "C" FDOT IND. 232	66.10	62.38
22	INLET TYPE "D" FDOT IND. 232	66.00	62.95
23	INLET TYPE "D" FDOT IND. 232	66.00	63.50
24	INLET TYPE "C" FDOT IND. 232	66.00	62.96
25	INLET TYPE "C" FDOT IND. 232	66.20	63.70
26	INLET TYPE "4" & 3'6" STRU. BOTTOM TYPE "P" FDOT IND. 200 & 210	67.94	62.89
27	MES – FDOT IND. #272 SHT.1 OF 2	N/A	61.20
28	INLET TYPE "4" & 3'6" STRU. BOTTOM TYPE "P" FDOT IND. 200 & 210	68.40	61.88
29	MES – FDOT IND. #272 SHT.1 OF 2	N/A	61.20
30	INLET TYPE "4" & 3'6" STRU. BOTTOM TYPE "P" FDOT IND. 200 & 210	68.40	61.88
31	MES – FDOT IND. #272 SHT.1 OF 2	N/A	61.20
32	INLET TYPE "4" & 5' STRU. BOTTOM TYPE "J" FDOT IND. 200 & 210	68.82	61.67
33	INLET TYPE "C" FDOT IND. 232	66.55	62.27
34	INLET TYPE "D" FDOT IND. 232	66.00	62.59
35	INLET TYPE "D" FDOT IND. 232	66.00	62.90
36	INLET TYPE "D" FDOT IND. 232	66.00	63.20
37	INLET TYPE "D" FDOT IND. 232	66.00	63.50
38	INLET TYPE "C" FDOT IND. 232	66.50	63.20
39	INLET TYPE "C" FDOT IND. 232	66.00	63.50

CALCULATIONS FOR STORM SEWER DESIGN

FROM PIPE INLET LOCATION	FLOWLINE ELEVATION	TO PIPE INLET LOCATION	FLOWLINE ELEVATION	A ACRES	C	CA ACRES	TOTAL CA	Tc MINS.	I in/hr	Qd CFS	PIPE SIZE N=12 TYP.	Q full CFS	SLOPE	LENGTH FT.	VELOCITY FT./S.
1	61.58	2	62.18	SEE STORMWATER MANAGEMENT REPORT							30"ø RCP	33.07	0.65%	92	6.74
3	61.19	4	62.33	0.110	.95	0.105	0.391	17.1	6.05	2.37	18"ø RCP	14.86	2.00%	57	8.41
4	62.33	5	62.77	0.000	.95	0.000	0.195	16.4	6.15	1.20	18"ø	5.75	0.30%	146	3.26
4	62.33	8	63.15	0.096	.95	0.091	0.091	15	6.38	0.58	18"ø	14.86	2.00%	41	8.41
5	62.77	6	63.35	0.138	.87	0.120	0.195	15.4	6.31	1.23	18"ø	5.75	0.30%	194	3.26
6	63.35	7	63.58	0.090	.83	0.075	0.075	15	6.38	0.48	18"ø	5.75	0.30%	78	3.26
9	61.08	10	61.18	SEE STORMWATER MANAGEMENT REPORT							45"x29"ERCP	21.25	0.10%	100	2.99
11	60.37	12	60.66	0.000	.00	0.000	0.348	17.5	6.09	2.12	24"ø RCP	12.39	0.30%	96	6.24
12	60.66	13	61.18	0.172	.66	0.114	0.348	16.8	6.09	2.12	24"ø	12.39	0.30%	174	3.94
13	61.18	14	63.15	0.157	.62	0.097	0.234	16.3	6.17	1.44	18"ø	11.22	1.14%	194	6.35
13	61.18	18	63.39	0.089	.95	0.085	0.085	15	6.38	0.54	18"ø	14.86	2.00%	41	8.41
14	63.15	15	63.89	0.085	.95	0.081	0.081	15	6.38	0.52	18"ø	14.86	2.00%	37	3.26
14	63.15	16	63.82	0.048	.62	0.030	0.056	15.2	6.35	0.36	18"ø	5.75	0.30%	224	3.26
16	63.82	17	63.94	0.027	.95	0.026	0.026	15	6.38	0.17	18"ø	5.75	0.30%	41	3.26

CALCULATIONS BASED ON A 10-YEAR STORM (I = 7.5)

CALCULATIONS FOR STORM SEWER DESIGN

FROM PIPE INLET LOCATION	FLOWLINE ELEVATION	TO PIPE INLET LOCATION	FLOWLINE ELEVATION	A ACRES	C	CA ACRES	TOTAL CA	Tc MINS.	I in/hr	Qd CFS	PIPE SIZE N=12 TYP.	Q full CFS	SLOPE	LENGTH FT.	VELOCITY FT./S.
19	61.20	20	61.49	0.180	.86	0.155	4.052	18.1	5.90	23.91	36"ø RCP	61.49	0.85%	34	8.70
20	61.49	21	62.38	0.351	.67	0.235	3.735	17.1	6.05	22.60	36"ø	36.53	0.30%	298	5.17
20	61.49	26	62.89	0.211	.77	0.162	0.162	15	6.38	1.03	15"ø	9.14	2.00%	70	7.44
21	62.38	22	62.95	1.162	.95	1.104	2.121	15.4	6.31	13.38	30"ø	29.00	0.50%	114	5.91
21	62.38	24	62.96	0.559	.52	1.079	1.379	16.3	6.17	8.51	24"ø	12.39	0.30%	194	3.94
22	62.95	23	63.50	1.071	.95	1.017	1.017	15	6.38	6.49	24"ø	15.34	0.46%	120	4.88
24	62.96	25	63.70	0.618	.48	0.300	0.300	15	6.38	1.91	18"ø	5.75	0.30%	248	3.26
27	61.20	28	61.88	0.424	.86	0.365	0.365	15	6.38	2.33	15"ø RCP	9.13	2.00%	34	7.44
29	61.20	30	61.88	0.424	.86	0.365	0.365	15	6.38	2.33	15"ø RCP	9.13	2.00%	34	7.44
31	61.20	32	61.67	0.074	.87	0.064	3.469	17.1	6.05	20.99	36"ø RCP	78.35	1.38%	34	11.08
32	61.67	33	62.27	0.171	.22	0.038	3.405	16.5	6.14	20.91	36"ø	36.53	0.30%	200	5.17
33	62.27	34	62.59	0.563	.87	0.490	3.367	16.2	6.18	20.81	36"ø	36.53	0.30%	105	5.17
34	62.59	35	62.90	0.704	.94	0.662	2.397	15.8	6.25	14.98	30"ø	22.47	0.30%	105	4.58
34	62.59	38	63.20	0.342	.75	0.257	0.480	15.6	6.28	3.01	18"ø	6.21	0.35%	176	3.52
35	62.90	36	63.20	0.878	.95	0.834	1.735	15.4	6.31	10.95	24"ø	12.39	0.30%	100	3.94
36	63.20	37	63.50	0.948	.95	0.901	0.901	15	6.38	5.75	24"ø	12.39	0.30%	100	3.94
38	63.20	39	63.50	0.269	.83	0.223	0.223	15	6.38	1.42	15"ø	3.54	0.30%	100	2.88

CALCULATIONS BASED ON A 10-YEAR STORM (I = 7.5)

PROPOSED FILL

NET FILL WILL BE APPROXIMATELY 38,000 C.Y. OF CLEAN SAND MATERIAL. (NOT FOR BID PURPOSES.)

NORTH

PAVING, GRADING AND DRAINAGE

SCALE: 1"=50'

0 25 50 100 150

NOTE: CONTRACTOR MUST SUBMIT TO ENGINEER SHOP DRAWINGS OF ALL STORM STRUCTURES FOR APPROVAL PRIOR TO PRECASTING.

THIS DRAWING AND THE DESIGN SHOWN ARE THE PROPERTY OF SPRING ENGINEERING, INC. AND ARE NOT TO BE REPRODUCED, COPIED, PUBLISHED, OR USED IN WHOLE OR PART WITHOUT WRITTEN CONSENT. THEY ARE TO BE USED ONLY FOR THE SITE AND PROJECT IDENTIFIED AND SHALL BE RETURNED UPON REQUEST.

Call before you dig
It's not just another catchy slogan. It's the law.
FLORIDA LAW REQUIRES EXCAVATORS TO NOTIFY OWNERS OF UNDERGROUND FACILITIES NO LESS THAN TWO (2) DAYS PRIOR TO EXCAVATION
Sunshine State One Call
www.callsunshine.com
1-800-432-4770

100%
CONSTRUCTION PLANS
ISSUE DATE: 10/05/12

REVISIONS

REV	DATE	DESCRIPTION

ROLAND P. DOVE, P.E.
FL REG. No. 36153
DATE

CIOMPARK 75
LOT 10
Near East Corner of C.R. 54 and Pet Lane
Pasco County, FL 35559

CONTRACT DATE:
May 9, 2012

SPRING ENGINEERING, INC.
ENGINEERING • LAND PLANNING • ARCHITECTURE
3014 U.S. HWY 19, HOLIDAY, FL (727) 938-1516
FL COA NO. 00005158 & LICENSE NO. AA-C001747

PAVING, GRADING AND DRAINAGE PLAN

DESIGNED BY: RPD
DRAWN BY: RPD
CHECKED BY: RPD
JOB NO. 2012-28
SHEET NO. C3.0

CONTROL STRUCTURE DETAIL

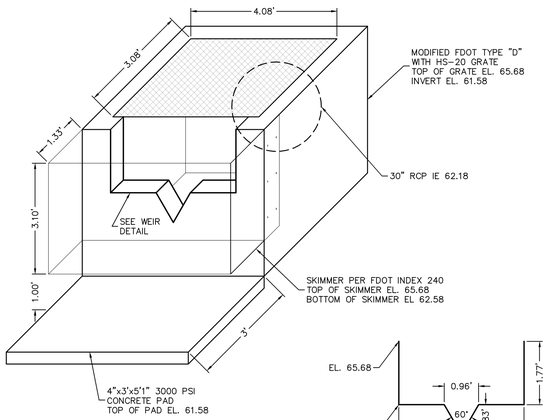

SCALE 1" = 2'

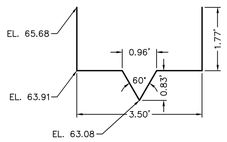

WEIR DETAIL (FRONT VIEW)

CONCRETE PAD FOR TRAILER LANDING

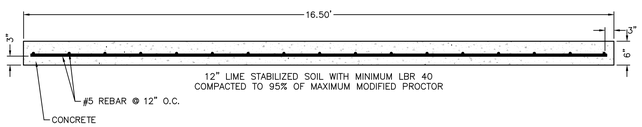

NOTE:
1. 4000 PSI CONCRETE MINIMUM
2. PROVIDE EXPANSION JOINT NOT TO EXCEED 30'-0" SPACING (TYPICAL).

DATUM AND BENCHMARKS

ELEVATIONS SHOWN HEREON ARE BASED ON THE NORTH AMERICAN VERTICAL DATUM OF 1988. (NAVD88)

CONTROL BENCHMARK: STAINLESS STEEL ROD WITH A NGS LOGO CAP IS STAMPED X 669. BENCHMARK IS LOCATED APPROXIMATELY 0.2 OF A MILE SOUTHWEST OF MAGNOLIA BOULEVARD ON THE SOUTHERLY SIDE OF STATE ROAD 54. ELEVATION = 63.09' (NAVD88)

SITE BENCHMARK #1: FOUND PK NAIL (NO ID) ON THE NORTHWESTERLY SIDE OF A ENTRANCE/LANDSCAPE ISLAND – NEAR THE NORTHEAST EDGE OF PROJECT (SEE SURVEY). ELEVATION = 66.38' (NAVD88)

SITE BENCHMARK #2: FOUND PK NAIL & TAB LB-6113, NEAR THE SOUTHWEST CORNER OF SUBJECT PARCEL (SE SURVEY). ELEVATION = 66.40' (NAVD88)

GRADING NOTES

1. CONTRACTOR SHALL INSURE THAT THE CONSTRUCTION OF ALL HANDICAPPED PARKING SPACES, ACCESS AISLES, LOADING ZONES AND RAMPS COMPLY WITH THE ADA AND CABO/ANSI STANDARDS. SLOPES OF HANDICAPPED PARKING AND LOADING AREAS SHALL NOT EXCEED 2%. CONTRACTOR SHALL NOTIFY THE PROJECT ENGINEER (IN WRITING) OF ANY PROBLEM AREAS PRIOR TO CONSTRUCTION OR ASSUME RESPONSIBILITY FOR ALL NECESSARY RELATED CORRECTIONS.

   ALL ORGANIC MATERIAL SHALL BE REMOVED FROM BENEATH THE FOOTINGS, SLABS AND PAVEMENT AND REPLACED WITH COMPACTED INORGANIC GRANULAR BACKFILL. EXCAVATION OF UNSUITABLE MATERIALS SHOULD EXTEND A MINIMUM DISTANCE OF 5' BEYOND THE
2. FOOTPRINT OF THE BUILDING OR EDGE OF PAVEMENT.
3. FOR ADDITIONAL INFORMATION ON THE REQUIRED SITE PREPARATION REFER TO THE REPORT OF GEOTECHNICAL SUBSURFACE EXPLORATION.
4. REMOVAL OF ALL CONSTRUCTION DEBRIS, LIMEROCK, EXCESS OF BUILDERS SAND, CONCRETE AND MORTAR DEBRIS, EXISTING WEEDS AND GRASSES, AND ALL FOREIGN MATERIALS IN THE PLANTING BED AND SOD AREAS SHALL BE REMOVED AND CLEAN FLORIDA FILL OF PH 5.5-6.6 SHALL BE INSTALLED PRIOR TO ANY INSTALLATION OF PLANTS OR TREES.
5. ALL PAVING SURFACES SHALL BE GRADED TO DRAIN POSITIVELY IN THE DIRECTION SHOWN BY THE FLOW ARROWS ON THE PLANS AND TO PROVIDE A SMOOTH TRANSITION WITH NO BREAKS IN GRADE AND NO STEEP OR REVERSE CROSS SLOPES. AT APPROACHES TO AND INTERSECTIONS WITH EXISTING GRADES, IT MAY BE NECESSARY AND ADVISABLE TO MAKE MINOR LOCAL FIELD ADJUSTMENTS TO ACCOMPLISH THE PURPOSES OUTLINED. IT IS THE CONTRACTORS RESPONSIBILITY TO ENSURE POSITIVE DRAINAGE AND SEI SHALL BE CONSULTED SO THAT WE MAY MAKE ANY AND ALL REQUIRED INTERPRETATIONS OF THE PLANS OR GIVE SUPPLEMENTARY INSTRUCTIONS TO ACCOMPLISH THE INTENT OF THE PLANS. ASPHALTIC CONCRETE SHALL CONFORM TO THE FLORIDA DEPARTMENT OF TRANSPORTATION STANDARD SPECIFICATIONS FOR ROAD AND BRIDGE CONSTRUCTION LATEST EDITION. FOR MATERIALS AND METHOD OF CONSTRUCTION. ALL ROADWAY BASES SHALL BE PRIMED AND, IF REQUIRED, A TACK COAT SHALL BE APPLIED. ALL MATERIALS AND CONSTRUCTION METHODS SHALL CONFORM TO THE FLORIDA DEPARTMENT OF TRANSPORTATION STANDARD SPECIFICATIONS FOR ROAD AND BRIDGE CONSTRUCTION, LATEST EDITION. TEST REPORTS FOR SUBGRADE, BASE, ASPHALT AND BASE CORE AND CONCRETE SHALL BE SUBMITTED TO THE ENGINEER OF RECORD FOR REVIEW AND APPROVAL. SEE SPECIFICATIONS FOR SPECIFIC TESTING REQUIREMENTS.
6. THE GRADING SHOWN ON THESE PLANS IS INTENDED TO EXPRESS THE GENERAL GRADING INTENT OF THE PROJECT. THE CONTRACTOR IS EXPECTED TO GRADE THE ENTIRE SITE TO PROVIDE POSITIVE DRAINAGE IN ALL AREAS THROUGHOUT THE SITE. SMOOTH TRANSITIONS SHALL BE PROVIDED BETWEEN CONTOURS OR SPOT ELEVATIONS AS SHOWN ON THE PLANS TO ACCOMPLISH THE GRADING INTENT. ALL SLOPES SHALL BE STABILIZED IMMEDIATELY AFTER FINAL GRADING HAS BEEN COMPLETED. CONTRACTOR TO GRADE PROPERTY SO THAT GRADING MEETS ADJACENT PROPERTY AND RIGHT – OF – WAY ELEVATIONS. CONTRACTOR SHALL NOTIFY THE OWNER AND SEI PRIOR TO DEMOBILIZATION OF GRADING EQUIPMENT TO DETERMINE THAT THE GRADING INTENT HAS BEEN ACHIEVED. ALL FILL MATERIAL SHALL BE SOIL OR SOIL-ROCK MIXTURE WHICH IS FREE FROM ORGANIC MATTER AND OTHER DELETERIOUS SUBSTANCE. IT SHALL BE PREDOMINATELY GRANULAR WITH A MAXIMUM PARTICLE SIZE OF TWO INCHES AND A PLASTICITY INDEX OF 12 OR LESS. ALL BACKFILL WITHIN THE ROADWAY, OVER ANY PIPE THAT IS TO BE INSTALLED UNDER THE ROADWAY OR WITHIN EMBANKMENTS, ETC. IS TO BE COMPACTED TO 100% OF MAXIMUM DENSITY AS DETERMINED BY AASHTO AND PER F.D.O.T. SPECIFICATIONS, SECTION 125.8.3, LATEST EDITION.

RETAINING WALL DETAIL

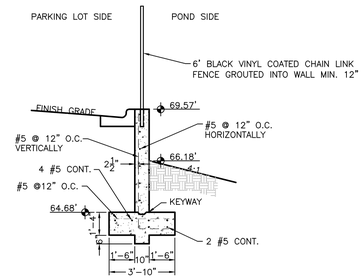

NOTE:
1. 3000 PSI CONCRETE MINIMUM
2. TRANSITION IN FOOTING WIDTH TO OCCUR OVER 24" ZONE MAX.
3. PROVIDE EXPANSION JOINT IN VERTICAL WALL NOT TO EXCEED 30'-0" SPACING (TYPICAL).

GRAND ENTRY ROAD CROSS-SECTION 15' LANE TYPICAL STA 6+65 TO 8+15

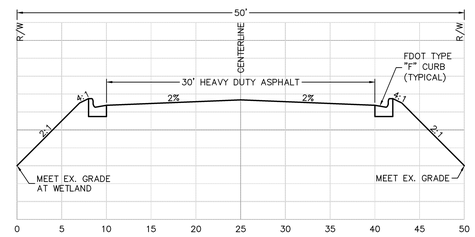

SCALE: 1" = 8' H
1" = 4' V

GRAND ENTRY ROAD CROSS-SECTION 15' LANE TYPICAL STA. 3+62 TO 6+65

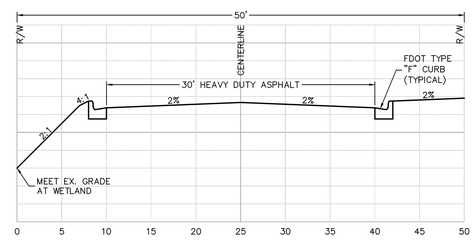

SCALE: 1" = 8' H
1" = 4' V

GRAND ENTRY ROAD CROSS-SECTION 12' LANE TYPICAL STA. 0+50 TO 2+72

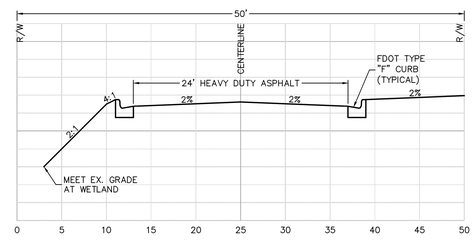

SCALE: 1" = 8' H
1" = 4' V

TESTING SCHEDULE GUIDE FOR FLORIDA

ITEM	TEST TYPE	TEST I.D.	REQUIREMENTS	FREQUENCY
EMBANKMENT	MAXIMUM DENSITY OPTIMUM MOISTURE FIELD DENSITY	AASHTO T180 ASTM D1557 AASHTO T191, T204, T238 ASTM D1556, D2937, D2922	N/A 95% OF MAXIMUM DENSITY	PER SOIL TYPE ONE PER 2,500 S.F. HORIZONTALLY *, ALTERNATING LIFTS (12")
UTILITY TRENCH BACKFILL UNDER ROADWAYS AND STRUCTURES	MAXIMUM DENSITY OPTIMUM MOISTURE FIELD DENSITY	AASHTO T180 ASTM D1557 AASHTO T191, T204, T238 ASTM D1556, D2937, D2922	N/A 95% OF MAXIMUM DENSITY	PER SOIL TYPE ONE PER 2,500 S.F. HORIZONTALLY *, EVERY 2' VERTICALLY D2922 – AT LEAST ONE FOR EACH PIPE RUN
BACKFILL OF STRUCTURES	MAXIMUM DENSITY OPTIMUM MOISTURE FIELD DENSITY	AASHTO T180 ASTM D1557 AASHTO T191, T204, T238 ASTM D1556, D2937, D2922	N/A 95% OF MAXIMUM DENSITY	PER SOIL TYPE ONE PER 2,500 S.F. EVERY 2' VERTICALLY
SUBGRADE	BEARING VALUES MAXIMUM DENSITY OPTIMUM MOISTURE FIELD DENSITY & THICKNESS	LBR – FLA. D.O.T. AASHTO T180 ASTM D1557 AASHTO T191, T238 ASTM D1556, D2922	LBR = 40 MIN. N/A 98% OF MAXIMUM DENSITY	ONE PER SOIL TYPE CHECK POINT LBR AT 500 L.F. HORIZONTALLY ONE PER SOIL TYPE ONE PER 2,500 S.F. HORIZONTALLY
BASE	BEARING VALUES MAXIMUM DENSITY OPTIMUM MOISTURE THICKNESS FIELD DENSITY GRADATION ATTERBURG LIMITS	LBR – FLA. D.O.T. AASHTO T180 ASTM D1557 AASHTO T191, T238 ASTM D1556, D2922 AASHTO T27, T98 AASHTO T90 ASTM C136, D423, D424	LBR = 100 MIN. N/A 98% OF MAXIMUM DENSITY PER SPECIFICATIONS	ONE PER SOURCE OR AS MATERIAL CHANGES CHECK POINT LBR AT 500 L.F. HORIZONTALLY ONE PER SOURCE ONE PER 2,500 S.F. HORIZONTALLY ONE PER SOURCE
SOIL CEMENT BASE MIX DESIGN (TO BE USED IF SEPARATION BETWEEN SHWT AND BOTTOM OF BASE IS < 1.5')	PORTLAND CEMENT ASSOC. SPECIFICATIONS MAXIMUM DENSITY OPTIMUM MOISTURE COMPRESSIVE STRENGTH SPECIMENS TEST CORES FIELD DENSITY & THICKNESS	 AASHTO T134 (STANDARD) PORTLAND CEMENT ASSOC. SPECIFICATIONS PORTLAND CEMENT ASSOC. SPECIFICATIONS AASHTO T191, T238 ASTM D1556, D2922	PER SPECIFICATIONS N/A 300 PSI AT 7-DAYS TYPE DAILY ** 450 PSI AT 21-DAYS SET OF COMPRESSIVE ** 95% OF MAXIMUM DENSITY	ONE PER SOIL TYPE ONE PER SOIL TYPE DAILY ONE SET OF 3 PER SOIL TYPE ONE SET OF 3 PER SOIL TYPE ONE PER 2,500 S.F. HORIZONTALLY
ASPHALTIC CONCRETE	MATERIALS QUALITY BITUMEN CONTENT GRADATION FIELD DENSITY LOS ANGELES ABRASION THICKNESS	AASHTO T164 ASTM D2172 ASTM 02950-81 AASHTO T96-77 ASTM C131-81 N/A	 PER SPECIFICATIONS 95% OF LAB DENSITY PER SPECIFICATIONS PER SPECIFICATIONS	 ONE PER DAY ONE PER 2,500 S.F. HORIZONTALLY ONE PER SOURCE ONE PER 2,500 S.F.

NOTES:
* THE CONTRACTOR SHALL NOT PAVE OVER SOIL CEMENT BASE UNTIL A 30-DAY CURING HAS ELAPSED.
** MAXIMUM STRENGTH LIMITS, AS ESTABLISHED BY SOILS TESTING COMPANY, SHALL NOT BE EXCEEDED.
*** SHOULD ANY OF THE INFORMATION PROVIDED HEREIN CONFLICT WITH EITHER THE RECOMMENDATION OF THE GEOTECHNICAL ENGINEER, AND/OR THE GEOTECHNICAL REPORT, THEN THE AFOREMENTIONED RECOMMENDATIONS WILL SUPERSEDE THIS "TESTING SCHEDULE GUIDE".

ASPHALT PAVING

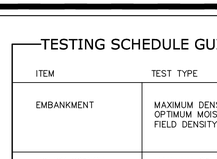

(A) HOT MIX ASPHALT SURFACE COURSE COMPACTED TO MINIMUM 96% OF MARSHALL MAXIMUM LAB UNIT WEIGHT

(B) BASE COURSE COMPACTED TO MINIMUM 98% MAXIMUM MODIFIED PROCTOR DRY DENSITY (ASTM D-1557) & MINIMUM LBR-100

(C) SUBGRADE COMPACTED TO MINIMUM 95% MAXIMUM MODIFIED PROCTOR DRY DENSITY (ASTM D-1557) & MIN. LBR-40

Paving Section Design

Item	Material Description	Minimum Thickness	Design Thickness	Structural Coefficient per Inch	Structural Number On-Site	Structural Number Heavy Duty	Structural Number Entry Road
(A)	SP-9.5 Fine Mix	1"		0.44			
	SP-12.5 Fine Mix	1.5"	1.5"/2"	0.44	0.66	0.88	0.88
	SP-19.0 Fine Mix	2"		0.44			
(B)	Limerock	6"		0.18			
	Crushed Concrete	6"	6"/8"/12"	0.18	1.08	1.44	2.16
	Bank Run Shell	6"		0.18			
	Soil Cement (300 psi)	6"		0.15			
(C)	Subgrade - Soil stabilized to achieve min. LBR-40	9"	12"	0.08	0.96	0.96	0.96
Total SN Provided					2.70	3.28	4.00
Minimum SN Required					N/A	N/A	4.00

PASCO COUNTY DRAINAGE NOTES

IT IS THE OWNER'S RESPONSIBILITY TO INSPECT AND MAINTAIN THE WATER COLLECTION AND RETENTION SYSTEM ON A REGULAR BASIS.

DURING CONSTRUCTION IF SOMETHING IS UNCOVERED, PARTICULARLY OF AN ARCHEOLOGICAL NATURE, ALL WORK SHALL STOP AND THE STATE ARCHEOLOGICAL OFFICE AND THE COUNTY SHALL BE NOTIFIED.

ALL SODDED SLOPES OVER 4 TO 1, SHALL BE INSTALLED WITH SOD PEGS.

THIS DRAWING AND THE DESIGN SHOWN ARE THE PROPERTY OF SPRING ENGINEERING, INC. AND ARE NOT TO BE REPRODUCED, COPIED, PUBLISHED, OR USED IN WHOLE OR PART WITHOUT WRITTEN CONSENT. THEY ARE TO BE USED ONLY FOR THE SITE AND PROJECT IDENTIFIED AND SHALL BE RETURNED UPON REQUEST.

100%
CONSTRUCTION PLANS
ISSUE DATE: 10/05/12

REVISIONS

REV	DATE	DESCRIPTION

ROLAND P. DOVE, P.E.
FL REG. No. 36953
DATE

COMPARK 75
LOT 10
Near East Corner of C.R. 54 and Pet Lane
Pasco County, FL 35559

CONTRACT DATE:
May 9, 2012

SPRING ENGINEERING, INC.
ENGINEERING • LAND PLANNING • ARCHITECTURE
3014 U.S. HWY 19, HOLIDAY, FL (727) 938-1516
FL COA NO. 00005158 & LICENSE NO. AA-C001747

PAVING, GRADING AND DRAINAGE DETAILS AND NOTES

DESIGNED BY: RPD
DRAWN BY: RPD
CHECKED BY: RPD
JOB NO. 2012-28
SHEET NO. C3.1

SECTION 14, TOWNSHIP 26 SOUTH, RANGE 19 EAST
PASCO COUNTY, FLORIDA

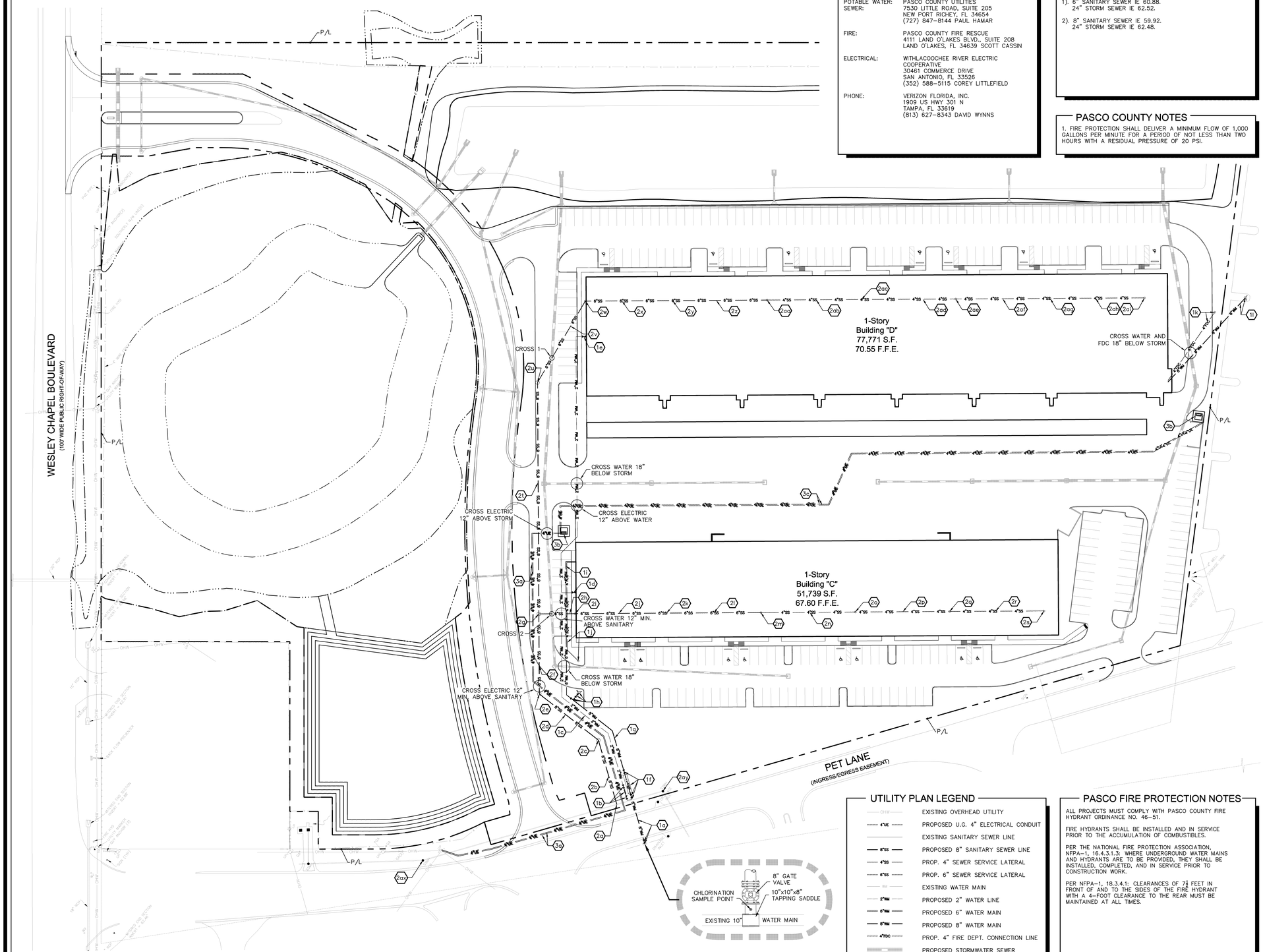

UTILITY CONTACTS

POTABLE WATER: SEWER:	PASCO COUNTY UTILITIES 7530 LITTLE ROAD, SUITE 205 NEW PORT RICHEY, FL 34654 (727) 847-8144 PAUL HAMAR
FIRE:	PASCO COUNTY FIRE RESCUE 4111 LAND O'LAKES BLVD., SUITE 208 LAND O'LAKES, FL 34639 SCOTT CASSIN
ELECTRICAL:	WITHLACOOCHEE RIVER ELECTRIC COOPERATIVE 30461 COMMERCE DRIVE SAN ANTONIO, FL 33526 (352) 588-5115 COREY LITTLEFIELD
PHONE:	VERIZON FLORIDA, INC. 1909 US HWY 301 N TAMPA, FL 33619 (813) 627-8343 DAVID WYNNS

UTILITY CROSSING

1). 6" SANITARY SEWER IE 60.88.
24" STORM SEWER IE 62.52.

2). 8" SANITARY SEWER IE 59.92.
24" STORM SEWER IE 62.48.

PASCO COUNTY NOTES

1. FIRE PROTECTION SHALL DELIVER A MINIMUM FLOW OF 1,000 GALLONS PER MINUTE FOR A PERIOD OF NOT LESS THAN TWO HOURS WITH A RESIDUAL PRESSURE OF 20 PSI.

UTILITY KEYNOTES

WATER SERVICE

1a TIE-IN TO EXISTING 10" PVC WATER MAIN WITH 10"X8" TAPPING SLEEVE, 8" GATE VALVE AND CHLORINATION SAMPLE POINT. COORDINATE WITH PASCO COUNTY UTILITIES. 56 LF OF 8" C-900 PVC DR-14. DIRECTIONAL BORE PER FDOT SPECIFICATION SECTION 555.

1b 12 LF OF 2" SCH. 40 PVC PIPE. 2-2" GATE VALVE AND 1-1/2" METER PER PASCO COUNTY DETAIL 12 ON SHEET C4.1.

1c 235 LF OF 2" SCH. 40 PVC PIPE AND ELBOWS.

1d 2" TEE, 16 LF OF 2" SCH. 40 PVC PIPE, 2" GATE VALVE AND CHLORINATION SAMPLE POINT.

1e ELBOWS, 290 LF OF 2" SCH. 40 PVC PIPE, 2" GATE VALVE AND CHLORINATION SMAPLE POINT.

1f 8"X8"X2" TEE, 2-8" GATE VALVE AND 8" METER PER PASCO COUNTY DETAIL 9 ON SHEET C4.1.

1g 101 LF OF 8" C-900 PVC DR-14.

1h 8" TEE, 8"X6" REDUCER, 8" GATE VALVE AND FIRE HYDRANT ASSEMBLY PER PASCO COUNTY DETAIL 24 ON SHEET C4.1.

1i 161 LF OF 6" C-900 PVC DR-14. FIRE SPRINKLER RISER PER DETAIL ON SHEET C4.1. COORDINATE WITH FIRE SPRINKLER ENGINEER.

1j 119 LF OF 4" C-900 PVC DR-14. CONNECT LINE ABOVE THE FIRE SPRINKLER CHECK VALVE. FIRE DEPARTMENT CONNECTION PER DETAIL ON SHEET C4.1. COORDINATE WITH FIRE SPRINKLER ENGINEER.

SEWER SERVICE

2a WYE CONNECTION TO EXISTING 8" SANITARY SEWER, IE 58.25.

2b 74 LF OF 8" PVC @ 0.40% SLOPE.

2c 4' STANDARD MANHOLE PER PASCO COUNTY DETAIL 38 SHEET C4.2. IE 58.63(N), 58.53(SW). RIM EL 66.50.

2d 80 LF OF 8" PVC @ 0.40% SLOPE.

2e 4' STANDARD MANHOLE PER PASCO COUNTY DETAIL 38 SHEET C4.2. IE 59.05(NE), 58.95(S). RIM EL 67.25.

2f 85 LF OF 8" PVC @ 0.40% SLOPE.

2g 4' STANDARD MANHOLE PER PASCO COUNTY DETAIL 38 SHEET C4.2. IE 59.39(SW), 59.49(NE,SE). RIM EL 66.18.

2h 39 LF OF 6" PVC @ 1.00% SLOPE.

2i C.O WITH HS-20 LID EL 66.62. IE 59.88.

2j 97 LF OF 6" PVC @ 1.00% SLOPE.

2k C.O. LID EL 67.60. IE 60.85.

2l 100 LF OF 6" PVC @ 1.00% SLOPE.

2m C.O. LID EL 67.60. IE 61.85.

2n 100 LF OF 4" PVC @ 1.00% SLOPE.

2o C.O. LID EL 67.60. IE 62.85.

2p 100 LF OF 4" PVC @ 1.00% SLOPE.

2q C.O. LID EL 67.60. IE 63.85.

2r 100 LF OF 4" PVC @ 1.00% SLOPE.

2s C.O. LID EL 67.60. IE 64.85.

2t 246 LF OF 8" PVC @ 0.40% SLOPE.

2u 4' STANDARD MANHOLE PER PASCO COUNTY DETAIL 38 SHEET C4.2. IE 60.48(SW), 60.58(E). RIM EL 68.64.

2v 100 LF OF 6" DIP @ 1.00%.

2w C.O. WITH HS-20 LID EL 70.50. IE 61.58.

2x 93 LF OF 6" PVC @ 1.00%.

2y C.O. LID EL 70.55. IE 62.51.

2z 100 LF OF 6" PVC @ 1.00%.

2aa C.O. LID EL 70.55. IE 63.51.

2ab 100 LF OF 4" PVC @ 1.00%.

2ac C.O. LID EL 70.55. IE 64.51.

2ad 100 LF OF 4" PVC @ 1.00%.

2ae C.O. LID EL 70.55. IE 65.51.

2af 100 LF OF 4" PVC @ 1.00%.

2ag C.O. LID EL 70.55. IE 66.61

2ah 100 LF OF 4" PVC @ 1.00%.

2ai C.O. LID EL 70.55. IE 67.61

ELECTRIC SERVICE – ALL WORK MUST BE COORDINATED WITH WITHLACOOCHEE RIVER ELECTRIC COOPERATIVE PRIOR TO ANY CONSTRUCTION ON THE SITE. CONTACT COREY LITTLEFIELD 352-588-5115, EXT. 1131.

3a TIE-IN TO EX. 3 PHASE POWER FROM EXISTING POLE TRANSFORMER. 2 – 567 LF OF 4" SCH. 40 PVC CONDUIT.

3b PROPOSED TRANSFORMER.

3c 2 – 765 LF OF 4" SCH. 40 PVC CONDUIT.

UTILITY PLAN LEGEND

OHW	EXISTING OVERHEAD UTILITY
4"UE	PROPOSED U.G. 4" ELECTRICAL CONDUIT
	EXISTING SANITARY SEWER LINE
8"SS	PROPOSED 8" SANITARY SEWER LINE
4"SS	PROP. 4" SEWER SERVICE LATERAL
6"SS	PROP. 6" SEWER SERVICE LATERAL
WM	EXISTING WATER MAIN
2"WM	PROPOSED 2" WATER LINE
6"WM	PROPOSED 6" WATER MAIN
8"WM	PROPOSED 8" WATER MAIN
4"FDC	PROP. 4" FIRE DEPT. CONNECTION LINE
	PROPOSED STORMWATER SEWER

PASCO FIRE PROTECTION NOTES

ALL PROJECTS MUST COMPLY WITH PASCO COUNTY FIRE HYDRANT ORDINANCE NO. 46-51.

FIRE HYDRANTS SHALL BE INSTALLED AND IN SERVICE PRIOR TO THE ACCUMULATION OF COMBUSTIBLES.

PER THE NATIONAL FIRE PROTECTION ASSOCIATION, NFPA-1, 16.4.3.1.3: WHERE UNDERGROUND WATER MAINS AND HYDRANTS ARE TO BE PROVIDED, THEY SHALL BE INSTALLED, COMPLETED, AND IN SERVICE PRIOR TO CONSTRUCTION WORK.

PER NFPA-1, 18.3.4.1: CLEARANCES OF 7½ FEET IN FRONT OF AND TO THE SIDES OF THE FIRE HYDRANT WITH A 4-FOOT CLEARANCE TO THE REAR MUST BE MAINTAINED AT ALL TIMES.

NORTH

UTILITY PLAN

SCALE: 1"=50'

0 25 50 100 150

THIS DRAWING AND THE DESIGN SHOWN ARE THE PROPERTY OF SPRING ENGINEERING, INC. AND ARE NOT TO BE REPRODUCED, COPIED, PUBLISHED, OR USED IN WHOLE OR PART WITHOUT WRITTEN CONSENT. THEY ARE TO BE USED ONLY FOR THE SITE AND PROJECT IDENTIFIED AND SHALL BE RETURNED UPON REQUEST.

100%
CONSTRUCTION PLANS
ISSUE DATE: 10/05/12

REVISIONS

REV	DATE	DESCRIPTION

ROLAND P. DOVE, P.E.
FL REG. No. 36953
DATE

CIOMPARK 75

LOT 10
Near East Corner of C.R. 54 and Pet Lane
Pasco County, FL 35559

CONTRACT DATE:
May 9, 2012

SPRING ENGINEERING, INC.
ENGINEERING • LAND PLANNING • ARCHITECTURE
3014 U.S. HWY 19, HOLIDAY, FL (727) 938-1516
FL COA NO. 00005158 & LICENSE NO. AA-C001747

UTILITY PLAN

DESIGNED BY: RPD
DRAWN BY: RPD
CHECKED BY: RPD
JOB NO. 2012-28
SHEET NO. C4.0

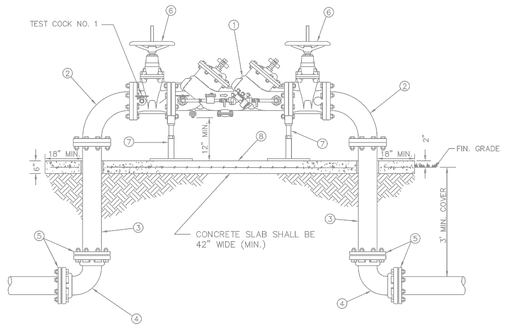

MATERIALS		
ITEM	QUANT.	DESCRIPTION
1	1	3", 4", 6", 8" DOUBLE CHECK VALVE/BFP ASSEMBLY WITH DETECTOR ASSEMBLY
2	2	3", 4", 6", 8" BEND, 90° FLANGE x FLANGE
3	2	3", 4", 6", 8" SPOOL PIECE FLG. x PE. D.I.P.
4	2	3", 4", 6", 8" BEND, 90° M.J. x M.J.
5	4	3", 4", 6", 8" GLAND, RETAINER M.J. (MEGALUG)
6	2	3", 4", 6", 8" VALVE, GATE FLG. x FLG. RESILIENT WEDGE O.S. & Y.
7	2	SUPPORT (AS NEEDED)
8	1	CONCRETE SLAB (6" THICK – 42" WIDE MIN.)

NOTE:
- NO TIE RODS OR EYE BOLT RETAINERS PERMITTED ABOVE GROUND.
- B.F.P. ASSEMBLY TO BE INSTALLED LEVEL & PLUMB.
- MINIMUM CLEARANCE OF 36" TO BE MAINTAINED AROUND ENTIRE DEVICE FOR TESTING
- ENTIRE ASSEMBLY TO BE PAINTED SAFETY BLUE.
- DETECTOR BY–PASS ASSEMBLY TO BE FACTORY INSTALLED AND CERTIFIED
- ALL MECHANICAL JOINTS SHALL BE RESTRAINED WITH MEGALUGS OR APPROVED EQUAL.
- BELL JOINT RESTRAINERS SHALL BE PROVIDED ON ALL UNDERGROUND PIPING AS SPECIFIED IN JOINT RESTRAINT TABLE DETAIL.
- ALL ABOVE GROUND PIPING SHALL BE FLANGED DUCTILE IRON PIPE (NO GALVANIZED OR PVC)
- ITEM 3 SHALL BE FIELD CUT TO PROPER LENGTH TO ACHIEVE DESIGNATED GROUND CLEARANCE
- IF SO SPECIFIED, ENTIRE ASSEMBLY TO BE ENCLOSED IN 6' CHAIN LINK FENCE.
- BFP DEVICE MUST BE LISTED WITH THE UNIVERSITY OF SOUTHERN CALIFORNIA FOUNDATION FOR CROSS CONNECTION CONTORL AND HYDRAULIC RESEARCH.

CREATED 02/24/03 REVISED	DOUBLE DETECTOR CHECK VALVE ASSEMBLY/BACKFLOW PREVENTER (SINGLE SERVICE: 3", 4", 6", 8", 10")	PROVIDED FOR INFORMATIONAL PURPOSES ONLY. NO MODIFICATIONS WITHOUT WRITTEN PCU APPROVAL
	PASCO COUNTY UTILITIES	DETAIL 9

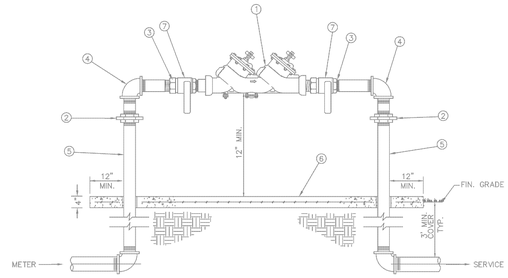

MATERIALS		
ITEM	QUANT.	DESCRIPTION
1	1	BACKFLOW PREVENTER ASSEMBLY, DOUBLE CHECK VALVE
2	2	UNIONS – GALV.
3	2	NIPPLES – BRASS
4	2	ELBOWS – GALV. 90°
5	2	RISER – GALV.
6	*	CONCRETE SLAB
7	2	BALL VALVES – BRASS OR S.S. (PROVIDED WITH BFP ASS'Y)

NOTE:
- FIELD ADJUST AND CUT ITEM 5 TO THE PROPER LENGTH.
- BFP DEVICE TO BE INSTALLED LEVEL AND PLUMB
- MINIMUM CLEARANCE OF 24" TO BE MAINTAINED AROUND DEVICE FOR TESTING.
- ENTIRE ASSEMBLY TO BE PAINTED SAFETY BLUE.
- CONCRETE SLAB TO EXTEND 12" MIN. AROUND ENTIRE DEVICE.
- DEVICE MUST BE LISTED WITH THE UNIVERSITY OF SOUTHERN CALIFORNIA FOUNDATION FOR CROSS CONNECTION CONTROL AND HYDRAULIC RESEARCH.

CREATED 02/24/03 REVISED	DOUBLE CHECK VALVE ASSEMBLY/BACKFLOW PREVENTER (SINGLE SERVICE: 3/4", 1", 1–1/2", 2")	PROVIDED FOR INFORMATIONAL PURPOSES ONLY. NO MODIFICATIONS WITHOUT WRITTEN PCU APPROVAL
	PASCO COUNTY UTILITIES	DETAIL 12

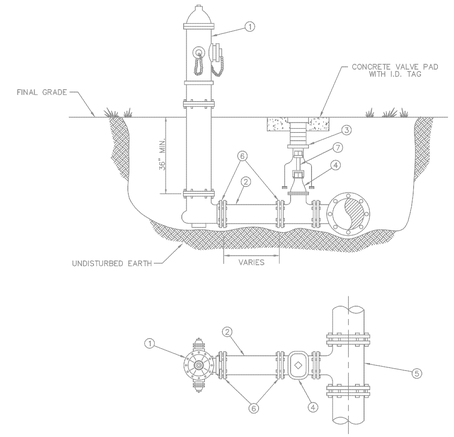

MATERIALS		
ITEM	QUANT.	DESCRIPTION
1	1	HYDRANT, FIRE (5 1/4" VALVE MIN.), PAINTED YELLOW
2	*	6" PIPE, P.V.C. (DR–18)
3	1	BOX, VALVE SLIP TYPE
4	1	6" VALVE, GATE, M.J. RESILIENT WEDGE
5	1	TEE, ANCHORING, M.J.
6	*	6" RESTRAINER GLAND (MEGALUG)
7	*	VALVE EXTENSION ROD, AS NECESSARY (3' MAX. BELOW GRADE)

CREATED 02/24/03 REVISED	FIRE HYDRANT PERPENDICULAR TO THE MAIN	PROVIDED FOR INFORMATIONAL PURPOSES ONLY. NO MODIFICATIONS WITHOUT WRITTEN PCU APPROVAL
	PASCO COUNTY UTILITIES	DETAIL 24

UTILITY GENERAL NOTES

U1. UTILITIES: ALL UNDERGROUND UTILITIES MUST BE INSTALLED BEFORE BASE AND SURFACE COURSES ARE CONSTRUCTED. SITE CONTRACTOR IS RESPONSIBLE FOR INSTALLING ALL UTILITIES IN ACCORDANCE WITH LOCAL CODES, WHETHER INDICATED ON THE PLANS OR NOT. CHECK WITH THE LOCAL GOVERNMENT PRIOR TO BID SUBMISSION. THE CONTRACTOR SHALL TAKE ALL NECESSARY MEASURES TO MINIMIZE INTERRUPTIONS OF EXISTING UTILITY SERVICE DURING CONSTRUCTION AND CONNECTION OF PROPOSED SERVICE LINES. CONFLICTS BETWEEN WATER LINES AND STORM/SANITARY SEWER SYSTEMS ARE TO BE RESOLVED BY ADJUSTING WATER LINES AS NECESSARY. CONTRACTOR SHALL MAINTAIN A MINIMUM OF TEN FOOT (10') HORIZONTAL SEPARATION OR 18" VERTICAL SEPARATION WHERE UNDERGROUND SERVICES CONFLICT. PIPE MEASUREMENTS ARE TO CENTER OF STRUCTURES AND ALL LENGTHS ARE PLUS OR MINUS.

U2. WATERMAINS: ALL NEW WATERMAINS, PIPES, FITTINGS, VALVES, PACKING AND JOINTING MATERIALS SHALL CONFORM WITH ALL APPLICABLE AWWA STANDARDS AND THE STATE PLUMBING CODE AND SHALL BE INSTALLED IN ACCORDANCE WITH APPLICABLE AWWA STANDARDS AND/OR THE MANUFACTURER'S RECOMMENDED PROCEDURES. ALL WATER MAIN PIPES AND FITTINGS SHALL CONTAIN NO MORE THAN EIGHT PERCENT LEAD. ALL STONES FOUND IN WATER MAIN TRENCHES SHALL BE REMOVED TO A DEPTH OF AT LEAST SIX INCHES BELOW THE BOTTOM OF THE PIPE. CONTINUOUS AND UNIFORM BEDDING TO BE PROVIDED AND BACKFILL MATERIAL SHALL BE TAMPED IN LAYERS AROUND THE PIPE AND FITTINGS AND TWELVE INCHES (12") ABOVE THE TOP OF THE PIPE TO ADEQUATELY SUPPORT AND PROTECT THE PIPE. ALL NEW WATER MAINS SHALL BE PRESSURE AND LEAK TESTED PER AWWA STANDARD C600 AND DISINFECTED PER AWWA STANDARD C651 AND RULE 62.555.345,F.A.C.. ALL FOUR INCH (4") AND LARGER WATER MAINS TO BE C–900 P.V.C. AND ALL THREE INCH (3") AND SMALLER WATER MAINS TO BE SCHEDULE 40 P.V.C. WATER MAIN TO BE 3' (MIN.) BELOW PROPOSED GRADE.

U3. SANITARY SEWERS: ALL SANITARY SEWER MAINS TO BE PVC (SDR–35).

U4. WATER AND SEWER CONFLICTS

CASE 1: WATER MAIN AND SANITARY SEWER LINES PARALLEL
1. ALL WATER LINES THAT ARE PARALLEL TO SANITARY SEWER LINES SHALL BE SEPARATED BY A MINIMUM CLEARANCE OF 10 FEET.
2. ALL WATER LINES THAT ARE PARALLEL TO SANITARY SEWER LINES AND ARE SEPARATED BY A DISTANCE OF LESS THAN 10 FEET SHALL BE CONSTRUCTED ACCORDING TO EITHER OPTION A, B OR C BELOW:
OPTION A – CONSTRUCT WATER LINE A MINIMUM OF 18" ABOVE THE SEWER AND TO ONE SIDE. WATER LINES AND SEWER LINES SHALL BE MADE OF DUCTILE IRON PIPE AND ALL JOINTS SHALL BE STAGGERED.
OPTION B – CASE THE WATER MAINS IN STEEL CASING.
OPTION C – CASE THE WATER MAINS IN CONCRETE.

CASE 2: WATER MAINS AND SEWER LINES CROSSING
1. A MINIMUM COVER OF 3' SHALL BE USED ON ALL WATER MAINS.
2. A MINIMUM VERTICAL SEPARATION OF 18" SHALL BE REQUIRED BETWEEN CROSSING WATER MAINS AND SANITARY SEWER LINES.
3. WHEN A VERTICAL SEPARATION OF 18" IS NOT POSSIBLE, THE WATER MAIN SHALL EITHER BE CASED IN STEEL OR CASED IN CONCRETE OR CENTER A LENGTH OF PIPE TO PREVENT WATER MAIN JOINTS FROM BEING WITHIN 10 FEET OF THE SANITARY SEWER LINE.

FDC W/ STORTZ CONNECTION

STORZ SPECIFICATION:
STRAIGHT PATTERN STORZ ADAPTER. 4" NPT X 5" TORZ WITH 5" CAP. HARD–COATED ALUMINUM CONSTRUCTION AND GALVANIZED STEEL ELBOW.

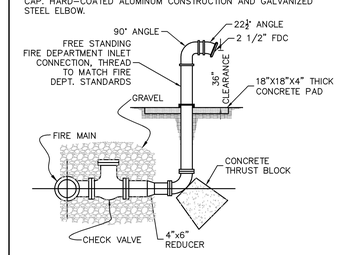

FDC SPECIFICATION:
FEMALE HOSE THREAD SWIVEL INLETS, PLUGS WITH CHAINS, 18" COVER SLEEVE, AND IDENTIFICATION PLATE. CAST BRASS CONSTRUCTION.

SPRINKLER RISER DETAIL

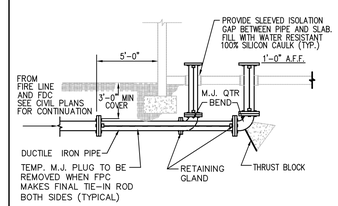

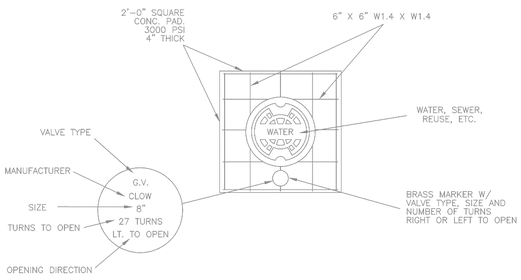

TYPICAL CONCRETE VALVE PAD

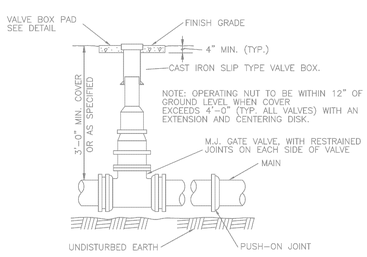

CREATED 02/24/03 REVISED	VALVE BOX DETAIL SLIP TYPE	PROVIDED FOR INFORMATIONAL PURPOSES ONLY. NO MODIFICATIONS WITHOUT WRITTEN PCU APPROVAL
	PASCO COUNTY UTILITIES	DETAIL 27

PIPE RESTRAINT LENGTHS IN FEET COMMON FITTINGS

WATER MAINS - TEST PRESSURE 150 PSI

PIPE SIZE	FITTING TYPE 11-1/4°	22-1/2°	45°	90°	DEAD END
4"	2'	4'	8'	20'	45'
6"	3'	6'	12'	28'	63'
8"	4'	7'	15'	36'	82'
10"	4'	9'	18'	43'	98'
12"	5'	10'	21'	50'	116'
16"	6'	13'	26'	63'	148'
20"	7'	15'	31'	76'	179'
24"	9'	17'	36'	87'	208'

FORCE MAINS - TEST PRESSURE 100 PSI

PIPE SIZE	FITTING TYPE 11-1/4°	22-1/2°	45°	90°	DEAD END
4"	1'	3'	6'	13'	30'
6"	2'	4'	8'	19'	42'
8"	2'	5'	10'	24'	55'
10"	3'	6'	12'	29'	66'
12"	3'	7'	14'	34'	77'
16"	4'	8'	18'	42'	99'
20"	5'	10'	21'	50'	119'
24"	6'	11'	24'	58'	139'

RESTRAINT LENGTHS ARE MEASURED FROM THE CENTER LINE OF THE FITTING ALONG THE PIPE IN BOTH DIRECTIONS (EXCEPT DEAD ENDS).

CREATED 02/24/03 REVISED	RESTRAINED JOINT TABLE COMMON FITTINGS	PROVIDED FOR INFORMATIONAL PURPOSES ONLY. NO MODIFICATIONS WITHOUT WRITTEN PCU APPROVAL
	PASCO COUNTY UTILITIES	DETAIL 28

PIPE RESTRAINT LENGTHS IN FEET TEES (BRANCH SIDE)

WATER MAINS - TEST PRESSURE 150 PSI

RUN SIZE	BRANCH SIZE 3"	4"	6"	8"	10"	12"	16"	20"	24"
3"	6'	14'	30'	—	—	—	—	—	—
4"	2'	11'	28'	44'	—	—	—	—	—
6"	1'	2'	22'	40'	52'	—	—	—	—
8"	1'	1'	16'	35'	48'	62'	—	—	—
10"	1'	1'	10'	30'	44'	58'	83'	—	—
12"	1'	1'	3'	25'	40'	55'	80'	103'	—
16"	1'	1'	1'	14'	31'	48'	75'	98'	119'
20"	1'	1'	1'	2'	22'	40'	69'	94'	116'
24"	1'	1'	1'	1'	11'	31'	63'	89'	111'

RESTRAINT LENGTHS ARE MEASURED FROM THE CENTER LINE OF THE TEE ALONG THE BRANCH FOR THE DISTANCE INDICATED. A MINIMUM OF 5 FEET OF RESTRAINED PIPE MUST BE INSTALLED ON BOTH RUNS OF THE TEE. MEGALUG TYPE RESTRAINERS ARE REQUIRED ON ALL JOINTS.

CREATED 02/24/03 REVISED	RESTRAINED JOINT TABLE TEES (BRANCH SIDE)	PROVIDED FOR INFORMATIONAL PURPOSES ONLY. NO MODIFICATIONS WITHOUT WRITTEN PCU APPROVAL
	PASCO COUNTY UTILITIES	DETAIL 29

THIS DRAWING AND THE DESIGN SHOWN ARE THE PROPERTY OF SPRING ENGINEERING, INC. AND ARE NOT TO BE REPRODUCED, COPIED, PUBLISHED, OR USED IN WHOLE OR PART WITHOUT WRITTEN CONSENT. THEY ARE TO BE USED ONLY FOR THE SITE AND PROJECT IDENTIFIED AND SHALL BE RETURNED UPON REQUEST.

100% CONSTRUCTION PLANS
ISSUE DATE: 10/05/12

REVISIONS

REV	DATE	DESCRIPTION

ROLAND P. DOVE, P.E.
FL REG. No. 36953
DATE

CIOMPARK 75
LOT 10
Near East Corner of C.R. 54 and Pet Lane
Pasco County, FL 35559

CONTRACT DATE:
May 9, 2012

SPRING ENGINEERING, INC.
ENGINEERING • LAND PLANNING • ARCHITECTURE
3014 U.S. HWY 19, HOLIDAY, FL (727) 938–1516
FL COA NO. 00005158 & LICENSE NO. AA–C001747

UTILITY PLAN NOTES AND DETAILS

DESIGNED BY: RPD
DRAWN BY: RPD
CHECKED BY: RPD
JOB NO. 2012-28
SHEET NO. C4.1

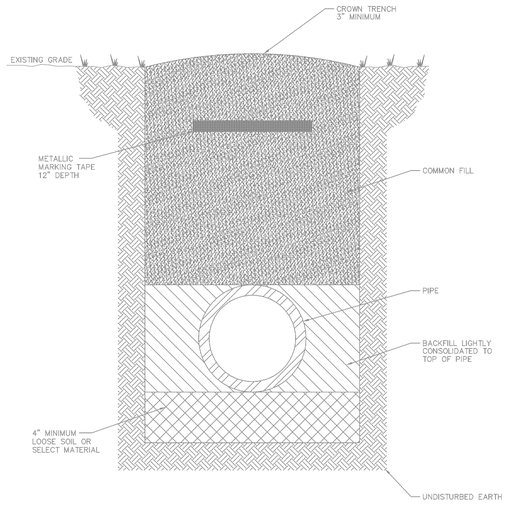

NOTES: –LOOSE SOIL OR SELECT MATERIAL IS NATIVE SOIL EXCAVATED FROM THE TRENCH FREE OF ROCKS AND FOREIGN MATERIAL.
–COMMON FILL TO BE PLACED AND COMPACTED IN 12" LAYERS. ROLLING EQUIPMENT SHALL NOT BE USED FOR COMPACTION UNTIL A MINIMUM OF 18" OF COMMON FILL HAS BEEN PLACED AND COMPACTED OVER THE PIPE. THREE FEET OF FILL SHALL BE PLACED BEFORE A HYDROHAMMER MAY BE USED FOR COMPACTION.

NTS

CREATED 02/24/03 REVISED	PIPE LAYING CONDITIONS STANDARD UNPAVED AREAS	PROVIDED FOR INFORMATIONAL PURPOSES ONLY. NO MODIFICATIONS WITHOUT WRITTEN PCU APPROVAL
	PASCO COUNTY UTILITIES	DETAIL 32

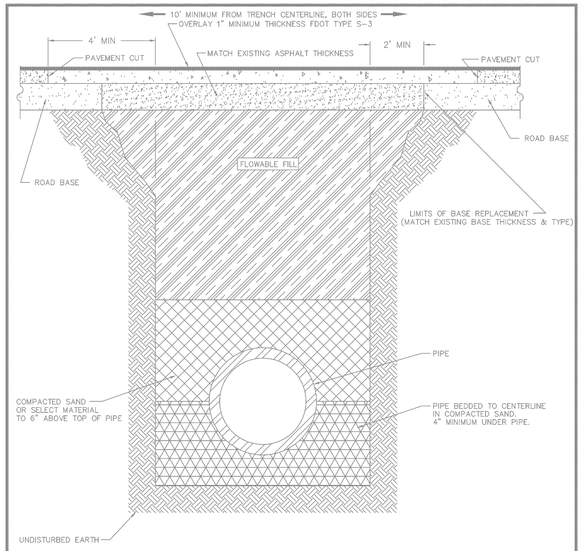

NOTE: –SELECT MATERIAL IS NATIVE SOIL EXCAVATED FROM THE TRENCH FREE OF ROCKS AND FOREIGN MATERIAL.
–COMPACTION TO TOP OF PILE IS TO BE APPROXIMATELY 90% STANDARD PROCTOR, AASHTO T-99.
–EXISTING CONCRETE/ASPHALT PAVEMENT SURFACE AND BASE TO BE CUT SQUARE WITH CONCRETE SAW.

NTS

CREATED 03/06/03 REVISED	PIPE LAYING CONDITIONS FLOWABLE FILL BACKFILL STANDARD EXISTING PAVED AREAS & ROADWAYS	PROVIDED FOR INFORMATIONAL PURPOSES ONLY. NO MODIFICATIONS WITHOUT WRITTEN PCU APPROVAL
	PASCO COUNTY UTILITIES	DETAIL 33

NOTE:
PRECAST CONCRETE
SHALL ATTAIN A MINIMUM
COMPRESSIVE STRENGTH
OF 4,000 p.s.i. AT 28 DAYS.

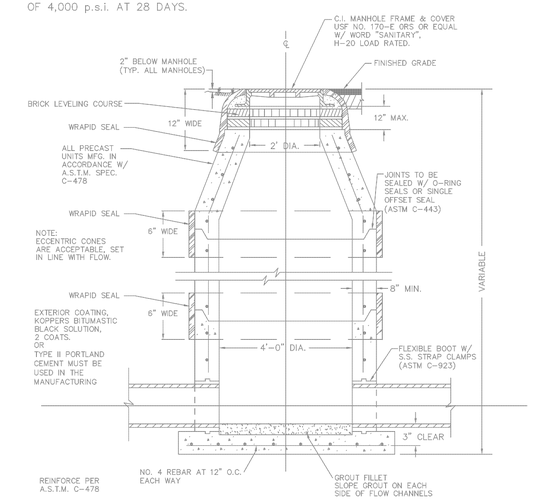

NOTE:
1. WRAPID SEAL MUST BE USED ON ALL JOINTS, CASTINGS AND RISER RINGS: ON ALL JOINTS ON AIR RELEASES, MANHOLES, GREASE/WATER, OIL/WATER SEPARATORS, AND WETWELLS.
2. WRAPID SEAL MUST BE USED IN ACCORDANCE WITH MANUFACTURES RECOMMENDATIONS.
3. PASCO COUNTY SHALL HAVE THE OPTION OF SPECIFYING THE TYPE OF INTERIOR LINING TO BE INSTALLED FOR EACH INDIVIDUAL MANHOLE.
4. PASCO COUNTY SHALL HAVE THE OPTION OF REQUIRING A NEGATIVE PRESSURE TEST PER ASTM C-1244
5. LIFT HOLES MUST NOT PENETRATE THE WALLS

CREATED 02/24/03 REVISED	STANDARD MANHOLE	PROVIDED FOR INFORMATIONAL PURPOSES ONLY. NO MODIFICATIONS WITHOUT WRITTEN PCU APPROVAL
	PASCO COUNTY UTILITIES	DETAIL 38

NOTE:
ECCENTRIC CONES
ARE ACCEPTABLE, SET
IN LINE WITH FLOW.

EXTERIOR COATING,
KOPPERS BITUMASTIC
BLACK SOLUTION,
2 COATS.
OR
TYPE II PORTLAND
CEMENT MUST BE
USED IN THE
MANUFACTURING
PROCESS

NOTE:
PRECAST CONCRETE
SHALL ATTAIN A MINIMUM
COMPRESSIVE STRENGTH
OF 4,000 p.s.i. AT 28 DAYS.

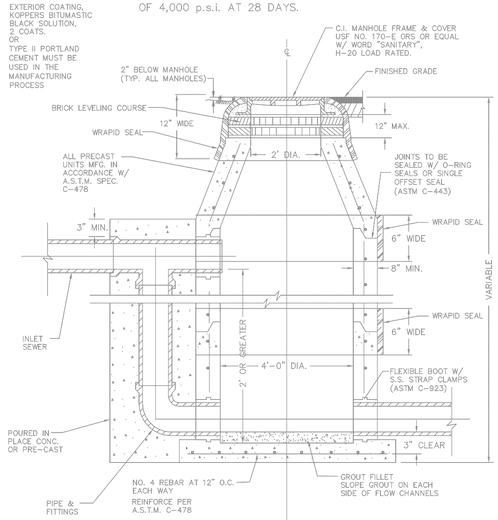

NOTE:
1. WRAPID SEAL MUST BE USED ON ALL JOINTS, CASTINGS AND RISER RINGS: ON ALL JOINTS ON AIR RELEASES, MANHOLES, GREASE/WATER, OIL/WATER SEPARATORS, AND WETWELLS.
2. WRAPID SEAL MUST BE USED IN ACCORDANCE WITH MANUFACTURES RECOMMENDATIONS.
3. PASCO COUNTY SHALL HAVE THE OPTION OF SPECIFYING THE TYPE OF INTERIOR LINING TO BE INSTALLED FOR EACH INDIVIDUAL MANHOLE.
4. PASCO COUNTY SHALL HAVE THE OPTION OF REQUIRING A NEGATIVE PRESSURE TEST PER ASTM C-1244
5. LIFT HOLES MUST NOT PENETRATE THE WALLS

CREATED 02/24/03 REVISED	DROP MANHOLE	PROVIDED FOR INFORMATIONAL PURPOSES ONLY. NO MODIFICATIONS WITHOUT WRITTEN PCU APPROVAL
	PASCO COUNTY UTILITIES	DETAIL 39

THIS DRAWING AND THE DESIGN SHOWN ARE THE PROPERTY OF SPRING ENGINEERING, INC. AND ARE NOT TO BE REPRODUCED, COPIED, PUBLISHED, OR USED IN WHOLE OR PART WITHOUT WRITTEN CONSENT. THEY ARE TO BE USED ONLY FOR THE SITE AND PROJECT IDENTIFIED AND SHALL BE RETURNED UPON REQUEST.

100%
CONSTRUCTION PLANS
ISSUE DATE: 10/05/12

REVISIONS

REV	DATE	DESCRIPTION

ROLAND P. DOVE, P.E.
FL REG. No. 36953
DATE

COMPARK 75

LOT 10
Near East Corner of C.R. 54 and Pet Lane
Pasco County, FL 35559

CONTRACT DATE:
May 9, 2012

SPRING ENGINEERING, INC.
ENGINEERING • LAND PLANNING • ARCHITECTURE
3014 U.S. HWY 19, HOLIDAY, FL (727) 938-1516
FL COA NO. 00005158 & LICENSE NO. AA-C001747

UTILITY PLAN
NOTES AND
DETAILS

DESIGNED BY: RPD
DRAWN BY: RPD
CHECKED BY: RPD
JOB NO.
2012-28
SHEET NO.
C4.2

SECTION 14, TOWNSHIP 26 SOUTH, RANGE 19 EAST
PASCO COUNTY, FLORIDA

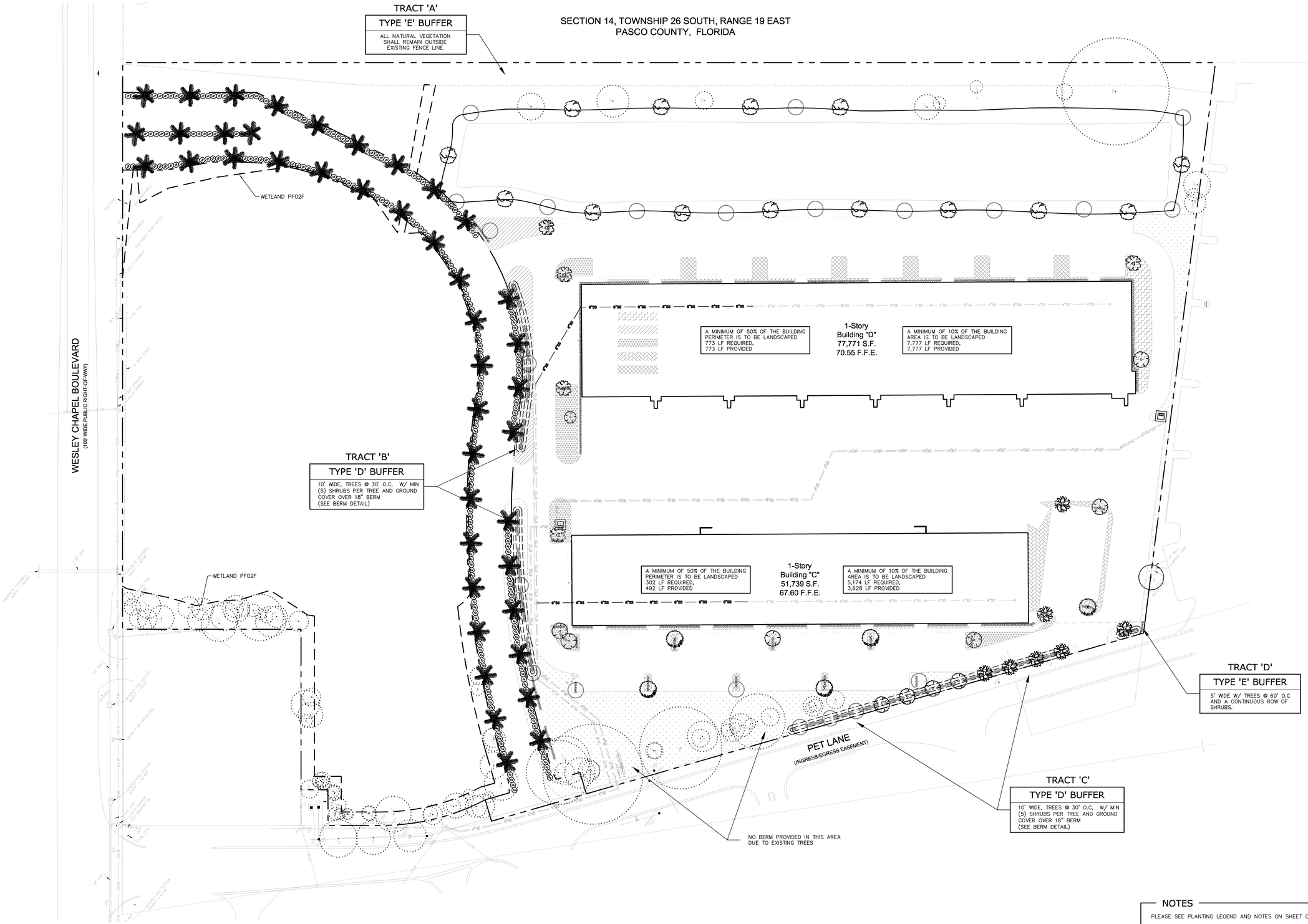

NORTH

LANDSCAPE PLAN

SCALE: 1"=50'

0 25 50 100 150

NOTES

PLEASE SEE PLANTING LEGEND AND NOTES ON SHEET C5.1.

THIS DRAWING AND THE DESIGN SHOWN ARE THE PROPERTY OF SPRING ENGINEERING, INC. AND ARE NOT TO BE REPRODUCED, COPIED, PUBLISHED, OR USED IN WHOLE OR PART WITHOUT WRITTEN CONSENT. THEY ARE TO BE USED ONLY FOR THE SITE AND PROJECT IDENTIFIED AND SHALL BE RETURNED UPON REQUEST.

100%
CONSTRUCTION PLANS
ISSUE DATE: 10/05/12

REVISIONS

REV	DATE	DESCRIPTION

ROLAND P. DOWE, P.E.
FL REG. No. 36153
DATE

COMPARK 75

LOT 10
Near East Corner of C.R. 54 and Pet Lane
Pasco County, FL 35559

CONTRACT DATE:
May 9, 2012

SPRING ENGINEERING, INC.
ENGINEERING • LAND PLANNING • ARCHITECTURE
3014 U.S. HWY 19, HOLIDAY, FL (727) 938-1516
FL COA NO. 00005158 & LICENSE NO. AR-C001747

LANDSCAPE PLAN

DESIGNED BY: RPD
DRAWN BY: RPD
CHECKED BY: RPD
JOB NO.
2012-28

SHEET NO.
C5.0

BERM SECTION

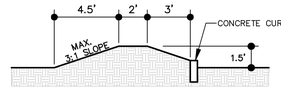

MINIMUM DIMMENSIONS FOR BERM SECTION

TREE REMOVAL

TREES TO BE REMOVED

LIVE OAKS			OTHER TREES	
SIZE (INCHES)	No.	TOTAL (INCHES)	No.	TOTAL (INCHES)
6"	17	102"		
7"	32	224"		
8"	30	240"		
9"	23	207"		
10"	24	240"		
11"	8	88"		
12"	14	168"		
13"	13	169"		
14"	8	112"		
15"	2	30"		
16"	3	48"		
18"	1	18"		
19"	1	19"		
20"	1	20"		
23"	1	23"		
24"	2	48"		
27"	1	27"		
28"	3	84"		
32"	2	64"		
60"	1	60"		
TOTAL	187	1991"		–
TOTAL OAK: 587"			TOTAL Other: –	

TREES TO BE PLANTED

LIVE OAKS			OTHER TREES	
SIZE (INCHES)	No.	TOTAL (INCHES)	No.	TOTAL (INCHES)
3"	22	66"	97	291"

187 TREES TOTAL REMOVED = 1991"
119 TREES TOTAL REPLACED = 357"
34 TREES TOTAL SAVED = 556"

SHEET C1.1 SHOWS LOCATION AND SIZE OF ALL TREES REMOVED

PLANTING LEGEND

TREES	ID	NAME	QTY	DT	NF	DESCRIPTION
	OAK	QUERCUS VIRGINIANA (LIVE OAK)	22	YES	YES	10' tall (min); 4' clear trunk (min); 4' spread (min); 3" caliper (min); containerized
	MAPLE	ACER RUBRUM (RED MAPLE)	14	YES	YES	10' tall (min); 4' clear trunk (min); 4' spread (min); 3" caliper (min); containerized
	PALM	SABAL PALMETTO (SABAL PALM)	43	YES	YES	10' (min.) clear trunk 3 palms = 1 tree (OFF-SITE)
	HORNBEAM	CARPINUS CAROLINIANA (HORNBEAM)	5	YES	YES	10' tall (min); 3' clear trunk (min); 4' spread (min); 3" caliper (min); containerized
	MAGNOLIA	MAGNOLIA GRANDIFLORA (SOUTHERN MAGNOLIA)	11	NO	YES	10' tall (min); 3' clear trunk (min); 4' spread (min); 3" caliper (min); containerized
	REDBUD	CERCIS CANADENSIS (EASTERN REDBUD)	10	YES	YES	10' tall (min); 3' clear trunk (min); 4' spread (min); 3" caliper (min); containerized
	DOGWOOD	CORNUS FLORIDA (FLOWERING DOGWOOD)	7	YES	YES	10' tall (min); 3' clear trunk (min); 4' spread (min); 3" caliper (min); containerized
	BUTTON WOOD	CONOCARPUS ERECTUS (SILVER BUTTONWOOD)	7	YES	YES	10' tall (min); 3' clear trunk (min); 4' spread (min); 3" caliper (min); containerized
SHRUBS	**ID**	**NAME**	**QTY**	**DT**	**NF**	**DESCRIPTION**
A	AZ	RHODODENDRON SPP. (AZALEA CANESCENS)	171	NO	YES	18" tall (min); 3 gal. container (min); plant 24" O.C.
B	AB	GAMOLEPIS CHRYSANTHEMOIDES (AFRICAN BUSH-DAISY)	258	YES	NO	18" tall (min); 3 gal. container (min); plant 24" O.C.
P	FP	FORESTIERA SEGREGATA (FLORIDA PRIVET)	242	YES	YES	18" tall (min); 3 gal. container (min); plant 24" O.C.
S	CB	ERYTHRINA HERBACEA (CORAL BEAN)	187	YES	YES	18" tall (min); 3 gal. container (min); plant 24' O.C.
C	C	CODIAEUM VARIEGATUM (CROTON)	187	YES	NO	18" tall (min); 3 gal. container (min); plant 24" O.C.
GROUND COVER						
	SF	NEPHROLEPIS EXALTATA (SWORD FERN)	500	NO	YES	1 gal. container (min); plant 24" O.C.
	PL	LANTANA MONTEVIDENSIS (PURPLE LANTANA)	750	YES	NO	1 gal. container (min); plant 24" O.C.
	BS	HELIANTHUS DEBILIS (BEACH SUNFLOWER)	1000	YES	YES	1 gal. container (min); plant 24" O.C.
	C	ZAMIA PUMILA (COONTIE)	750	YES	YES	1 gal. container (min); plant 24" O.C.
	BES	RUDBECKIA HIRTA (BLACK EYED SUSAN)	530	YES	YES	1 gal. container (min); plant 24" O.C.
	SOD	PASPALUM NOTATUM (BAHIA GRASS)	–	YES	YES	100% SAND GROWN BAHIA SOD
	MULCH	RED CEDAR MULCH				ALL TREES, SHRUBS AND GROUND COVER

NOTE:
1. ALL PLANTS TO BE FLORIDA No. 1 GRADE OR BETTER.
2. ALL PLANTS TO BE MINIMUM SIZE SHOWN ABOVE UNLESS NOTED OTHERWISE.
3. MULTIPLE TRUNK TREES ARE TO BE (MIN.) 3 TRUNKS, 1" EA., 6' TALL.

LEGAL DESCRIPTION

PARCEL 2:

A PARCEL OF LAND LYING IN SECTION 14, TOWNSHIP 26 SOUTH, RANGE 19 EAST, PASCO COUNTY, FLORIDA, BEING FURTHER DESCRIBED AS FOLLOWS: COMMENCE AT THE SOUTHEAST CORNER OF SAID SECTION 14 AND RUN NORTH 48°19'57" WEST, 4863.51 FEET TO A POINT ON THE SOUTHERLY RIGHT OF WAY LINE OF STATE ROAD NO. 54; THENCE NORTH 50°32'55" EAST, 320.00 FEET ALONG SAID SOUTHERLY RIGHT OF WAY LINE OF STATE ROAD NO. 54 TO THE POINT OF BEGINNING; THENCE CONTINUE NORTH 50°32'55" EAST, 634.79 FEET ALONG SAID SOUTHERLY RIGHT OF WAY LINE OF STATE ROAD NO. 54; THENCE SOUTH 39°27'05' EAST, 1,224.00 FEET; THENCE SOUTH 57°42'36" WEST, 617.03 FEET, THENCE NORTH 55°33'28" WEST, 771.12 FEET TO A POINT ON A CURVE; THENCE ALONG THE NORTHEASTERLY BOUNDARY OF AN INGRESS-EGRESS EASEMENT AS RECORDED IN OFFICIAL RECORDS BOOK 1502, PAGE 1477, PUBLIC RECORDS OF PASCO COUNTY, FLORIDA, THE FOLLOWING TWO (2) COURSES: (1) NORTHWESTERLY 120.89 FEET ALONG THE ARC OF A CURVE TO THE RIGHT, HAVING A RADIUS OF 250.00 FEET AND A CENTRAL ANGLE OF 27°42'20", CHORD BEARING NORTH 53°18'15" WEST, 119.71 FEET, TO A POINT OF TANGENCY, (2) NORTH 39°27'05" WEST, 60.00 FEET; THENCE NORTH 50°32'55" EAST, 40.00 FEET; THENCE NORTH 39°27'05" WEST, 30.00 FEET; THENCE NORTH 50°32'55" EAST, 180.00 FEET; THENCE NORTH 39°27'05" WEST, 200.00 FEET TO THE POINT OF BEGINNING.

THIS DRAWING AND THE DESIGN SHOWN ARE THE PROPERTY OF SPRING ENGINEERING, INC. AND ARE NOT TO BE REPRODUCED, COPIED, PUBLISHED, OR USED IN WHOLE OR PART WITHOUT WRITTEN CONSENT. THEY ARE TO BE USED ONLY FOR THE SITE AND PROJECT IDENTIFIED AND SHALL BE RETURNED UPON REQUEST.

100%
CONSTRUCTION PLANS
ISSUE DATE: 10/05/12

REVISIONS

REV	DATE	DESCRIPTION

ROLAND P. DOVE, P.E.
FL REG. No. 36953
DATE

CIOMPARK 75

LOT 10
Near East Corner of C.R. 54 and Pet Lane
Pasco County, FL 35559

CONTRACT DATE:
May 9, 2012

SPRING ENGINEERING, INC.
ENGINEERING • LAND PLANNING • ARCHITECTURE
3014 U.S. HWY 19, HOLIDAY, FL (727) 938-1516
FL COA NO. 00005158 & LICENSE NO. AA-C001747

LANDSCAPE LEGEND

DESIGNED BY: RPD
DRAWN BY: RPD
CHECKED BY: RPD

JOB NO.
2012-28

SHEET NO.
C5.1

DASHED LINES ILLUSTRATE BRANCHES AND STUMPS THAT ARE TO BE REMOVED. DO NOT REMOVE THE LEADER.

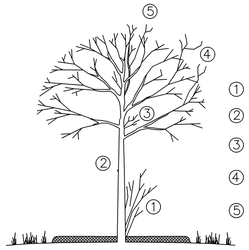

1. REMOVE SUCKERS & SHOOTS AT BASE OF TREE
2. MAKE CLEAN CUTS ON OLD STUBS, IF PRESENT
3. REMOVE ENTIRE SUPPLY OF TWIGS & BUDS ON TRUNK
4. SHAPE TREE BY REMOVING DAMAGED & MISSHAPEN BRANCHES
5. REMOVE CROSS BRANCHES & THOSE DEVELOPING INTO SECONDARY LEADERS

1 DECIDUOUS TREE PRUNING

IF ROOTBALL IS WRAPPED IN NON-BIODEGRADEABLE BURLAP, REMOVE ENTIRE WRAP AFTER IT IS PLACED IN PIT. WHEN BACKFILLING, PLACE PLANTING SOIL IN TWO LIFTS. AFTER FIRST LIFT, PUDDLE SOIL IN WITH WATER TO REMOVE ALL AIR POCKETS. PLACE SECOND LIFT AND REPEAT. CONTINUE TO PUDDLE AND FILL AS NECESSARY.

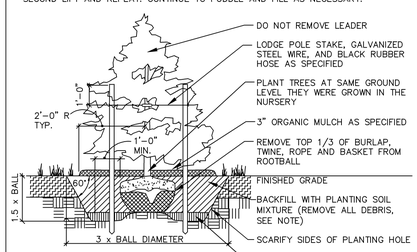

NOTE:
ALL TREE STAKES AND SUPPORT WIRE ARE TO BE REMOVED AFTER ONE (1) COMPLETE GROWING SEASON.

2 EVERGREEN TREE PLANTING DETAIL

IF ROOTBALL IS WRAPPED IN NON-BIODEGRADEABLE BURLAP, REMOVE ENTIRE WRAP AFTER IT IS PLACED IN PIT. WHEN BACKFILLING, PLACE PLANTING SOIL IN TWO LIFTS. AFTER FIRST LIFT, PUDDLE SOIL IN WITH WATER TO REMOVE ALL AIR POCKETS. PLACE SECOND LIFT AND REPEAT. CONTINUE TO PUDDLE AND FILL AS NECESSARY.

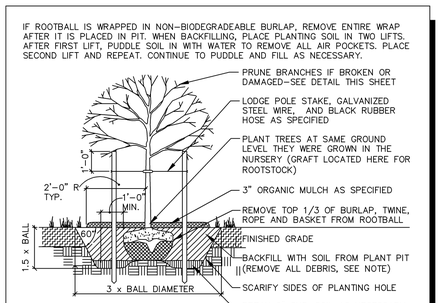

NOTE:
ALL TREE STAKES AND SUPPORT WIRE ARE TO BE REMOVED AFTER ONE (1) COMPLETE GROWING SEASON.

3 CANOPY TREE (2" or less) DETAIL

IF ROOTBALL IS WRAPPED IN NON-BIODEGRADEABLE BURLAP, REMOVE ENTIRE WRAP AFTER IT IS PLACED IN PIT. WHEN BACKFILLING, PLACE PLANTING SOIL IN TWO LIFTS. AFTER FIRST LIFT, PUDDLE SOIL IN WITH WATER TO REMOVE ALL AIR POCKETS. PLACE SECOND LIFT AND REPEAT. CONTINUE TO PUDDLE AND FILL AS NECESSARY.

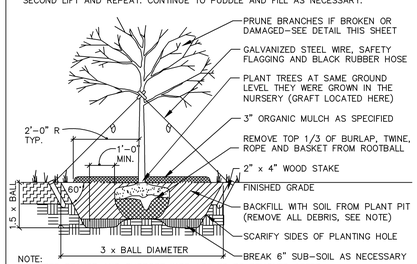

NOTE:
ALL TREE STAKES AND SUPPORT WIRE ARE TO BE REMOVED AFTER ONE (1) COMPLETE GROWING SEASON.

4 CANOPY TREE (2"+ cal.) DETAIL

IF ROOTBALL IS WRAPPED IN NON-BIODEGRADEABLE BURLAP, REMOVE ENTIRE WRAP AFTER IT IS PLACED IN PIT. WHEN BACKFILLING, PLACE PLANTING SOIL IN TWO LIFTS. AFTER FIRST LIFT, PUDDLE SOIL IN WITH WATER TO REMOVE ALL AIR POCKETS. PLACE SECOND LIFT AND REPEAT. CONTINUE TO PUDDLE AND FILL AS NECESSARY.

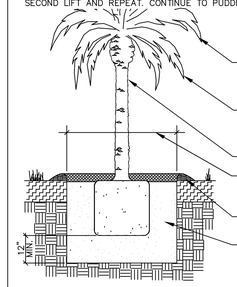

5 PALM TREE PLANTING DETAIL

IF ROOTBALL IS WRAPPED IN NON-BIODEGRADEABLE BURLAP, REMOVE ENTIRE WRAP AFTER IT IS PLACED IN PIT. WHEN BACKFILLING, PLACE PLANTING SOIL IN TWO LIFTS. AFTER FIRST LIFT, PUDDLE SOIL IN WITH WATER TO REMOVE ALL AIR POCKETS. PLACE SECOND LIFT AND REPEAT. CONTINUE TO PUDDLE AND FILL AS NECESSARY.

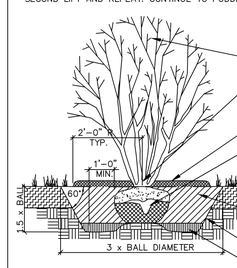

6 MULTI-STEMMED TREE DETAIL

REMOVE ALL CONTAINERS AND BURLAP, TWINE, ROPE AND BASKET. PRUNE ROOTS IF BALL IS ROOTBOUND. WHEN BACKFILLING PLANT PIT, PLACE PLANTING SOIL IN TWO LIFTS. AFTER FIRST LIFT, PUDDLE SOIL IN WITH WATER TO REMOVE ALL AIR POCKETS. PLACE SECOND LIFT AND REPEAT. CONTINUE TO PUDDLE AND FILL AS NECESSARY.

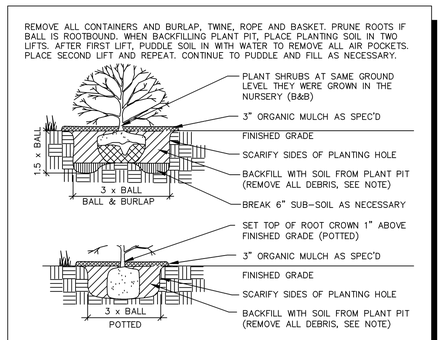

7 SHRUB PLANTING DETAIL

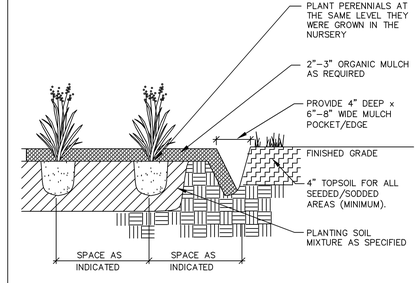

8 GROUNDCOVER PLANTING DETAIL

IRRIGATION GENERAL NOTES

I1. PLAN IS DIAGRAMMATIC ONLY. FINAL LOCATION OF LINES AND HEADS SHALL BE DETERMINED IN THE FIELD AND APPROVED BY THE ARCHITECT. LINES SHALL BE IN A COMMON TRENCH WHEREVER POSSIBLE. THE POINT OF CONNECTION SHALL BE AS INDICATED ON THE PLANS.

I2. THE CONTRACTOR SHALL VERIFY EXISTING SITE CONDITIONS AND ENSURE THAT ALL LOCAL CODES ARE MET.

I3. THE CONTRACTOR SHALL APPLY AND PAY FOR ALL PERMITS REQUIRED FOR INSTALLATION OF THE IRRIGATION STSTEM AS DEPICTED IN THESE PLANS.

I4. CONTRACTOR SHALL VERIFY AVAILABLE FLOW AND PRESSURE DOWNSTREAM FROM THE POINT-OF-CONNECTION PRIOR TO SYSTEM INSTALLATION. CONTRACTOR SHALL NOTIFY ARCHITECT IMMEDIATELY IF AVAILABLE FLOW IS LESS THAN REQUIRED TO RUN THE LARGEST ZONE. CONTRACTOR SHALL NOT PROCEED ANY FURTHER WITH INSTALLATION OF THE SYSTEM UNTIL NECESSARY REVISIONS HAVE BEEN DETERMINED BY THE ARCHITECT.

I5. THE CONTRACTOR SHALL NOT WILFULLY INSTALL THE SPRINKLER SYSTEM AS SHOWN ON THE DRAWINGS WHEN IT IS OBVIOUS IN THE FIELD THAT UNKNOWN OBSTRUCTIONS OR DIFFERENCES IN DIMENSIONS EXIST THAT MIGHT HAVE BEEN UNKNOWN DURING ENGINEERING. SUCH OBSTRUCTIONS SHALL BE BROUGHT TO THE ATTENTION OF THE OWNER'S AUTHORIZED REPRESENTATIVE. IN THE EVENT THIS NOTIFICATION IS NOT PERFORMED, THE CONTRACTOR SHALL ASSUME FULL RESPONSIBILITY FOR ANY REVISIONS NECESSARY AT NO COST TO THE OWNER.

I6. ALL SPRINKLER EQUIPMENT NOT OTHERWISE DETAILED OR SPECIFIED SHALL BE INSTALLED PER MANUFACTURER'S RECOMMENDATIONS AND SPECIFICATIONS.

I7. CONTRACTOR SHALL COORDINATE THE INSTALLATION OF ALL SPRINKLER MATERIALS, INCLUDING PIPE, WITH THE LANDSCAPE DRAWINGS TO AVOID INTERFERING WITH THE PLANTING OF TREES, SHRUBS OR OTHER PLANTS.

I8. IT IS THE INTENT OF THESE DRAWINGS TO INDICATE A COMPLETE IRRIGATION SYSTEM INSTALLED AND READY FOR USE WITHOUT FURTHER COST TO THE OWNER.

I9. ALL VALVES ARE TO BE LOCATED IN PLANTING AREAS WHEREVER POSSIBLE AND IN LOCKABLE VALVE BOXES.

I10. ALL ELECTRICAL WIRE FROM CONTROLLER TO VALVES SHALL BE 12 GAUGE UL DIRECT BURIAL OR LARGER AS REQUIRED BY LENGTH PER MANUFACTURER'S SPECIFICATIONS.

I11. BACKFILL FOR TRENCHING SHALL BE COMPACTED TO A DRY DENSITY EQUAL TO THE UNDISTURBED ADJACENT SOIL AND SHALL CONFORM TO ADJACENT GRADES WITHOUT DIPS, HUMPS, OR OTHER IRREGULARITIES.

I12. A MINIMUM OF TWO WORKING DAYS PRIOR TO PERFORMING ANY DIGGING, CALL SUNSHINE AT 1-800-432-4770 FOR INFORMATION ON THE LOCATION OF NATURAL GAS LINES, ELECTRICAL CABLES, TELEPHONE CABLES, ETC.

I13. CONTRACTOR AGREES THAT, IN ACCORDANCE WITH GENERALLY ACCEPTED CONSTRUCTION PRACTICES, CONTRACTOR WILL BE REQUIRED TO ASSUME SOLE AND COMPLETE RESPONSIBILITY FOR JOB SITE CONDITIONS DURING THE COURSE OF CONSTRUCTION OF THE PROJECT, INCLUDING SAFETY OF ALL PERSONS AND PROPERTY. THIS REQUIREMENT SHALL APPLY CONTINUOUSLY AND SHALL NOT BE LIMITED TO NORMAL WORKING HOURS.

I14. INSTALL PIPE AND CONTROL WIRES IN LANDSCAPE BEDS AND COMMON TRENCHES WHERE POSSIBLE.

I15. INSTALL ALL PIPE AND CONTROL WIRE, WHICH RUNS UNDER PAVING, WITHIN SCH. 40 PVC SLEEVES 2" DIA. MINIMUM SIZE AS REQUIRED TO ALLOW INSTALLATION WITHOUT BINDING. PROVIDE (1) SLEEVE PER PIPE. PROVIDE SEPARATE SLEEVES FOR CONTROL WIRE.

I16. SCHEDULE 40 PVC IS REQUIRED FOR ALL PRESSURE LINES AND UNDER ALL PAVED AREAS. PIPING MUST BE INSTALLED A MIN. OF 12" UNDERGROUND FOR NON PRESSURE IRRIGATION LINES AND 18" UNDERGROUND FOR CONSTANT PRESSURE IRRIGATION LINES.

I17. ALL IRRIGATION MATERIALS AND INSTALLATION SHALL COMPLY WITH THE UNIFORM PLUMBING CODE.

FLUSHING AND TESTING

I18. PIPING SHALL BE COMPLETELY FLUSHED OF FOREIGN PARTICLES BEFORE ATTACHING IRRIGATION COMPONENTS AND DRAIN VALVES.

I19. AFTER FLUSHING, AND WHEN ALL VALVES AND QUICK COUPLERS ARE IN PLACE, ALL MAIN SUPPLY LINES SHALL BE TESTED AT 100 POUNDS PER SQUARE INCH (105 PSI) WITH VALVES CLOSED. MAINTAIN PRESSURE FOR A PERIOD OF NOT LESS THAN (4) CONSECUTIVE HOURS. ALL JOINTS SHOWING LEAKS SHALL BE CLEANED, REMADE AND TESTED.

I20. AFTER FLUSHING, LATERAL PIPES SHALL BE TESTED WITH RISERS CAPPED AND DRAIN VALVES CLOSED. THE TEST SHALL BE MADE AT MAXIMUM OPERATING PRESSURE FOR A PERIOD OF NOT LESS THAN (1) HOUR. ALL JOINTS SHOWING LEAKS SHALL BE CLEANED, REMADE, AND TESTED. ALL TESTING SHALL BE DONE IN THE PRESENCE OF THE OWNER'S REPRESENTATIVE PRIOR TO BACKFILING OVER PIPING.

I21. OPERATIONAL TESTING: PERFORM OPERATIONAL TESTING AFTER HYDROSTATIC TESTING IS COMPLETED. DEMONSTRATE TO THE ARCHITECT THAT THE SYSTEM MEETS COVERAGE REQUIREMENTS (100%) AND THAT AUTOMATIC CONTROLS FUNCTION PROPERLY.

SUBMITTALS

I22. COMPLETE WARRANTY CARDS FOR AUTOMATIC CONTROLLER AND OTHER IRRIGATION MATERIAL (CONTROLLER KEYS, ETC.) SHALL BE DELIVERED TO OWNER.

I23. CONTRACTOR SHALL PREPARE AND ISSUE TO THE OWNER (AT COMPLETION OF THE INSTALLATION) AN ANNUAL CHART INDICATING LOCATION, OPERATING DATES, CYCLES, AND TIME FOR EACH ZONE.

GUARANTEE/FINAL ACCEPTANCE

I24. CONTRACTOR SHALL UNCONDITIONALLY GUARANTEE THE IRRIGATION SYSTEM FOR A PERIOD OF ONE YEAR FROM THE DATE OF FINAL ACCEPTANCE. MANUFACTURER WARRANTIES SHALL ONLY EXCEED THIS GUARANTEE AND CONTRACTOR SHALL BE LIABLE FOR REPAIRS/REPLACEMENT OF FAILED MATERIAL/WORKMANSHIP.

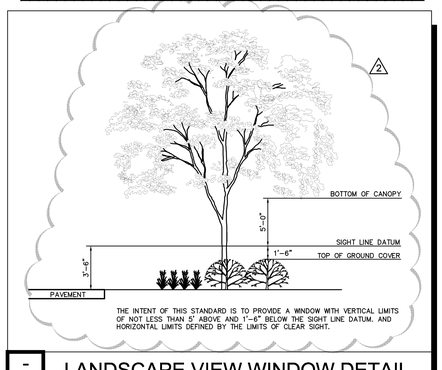

- LANDSCAPE VIEW WINDOW DETAIL

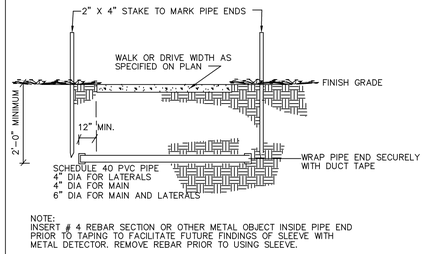

NOTE:
INSERT # 4 REBAR SECTION OR OTHER METAL OBJECT INSIDE PIPE END PRIOR TO TAPING TO FACILITATE FUTURE FINDINGS OF SLEEVE WITH METAL DETECTOR. REMOVE REBAR PRIOR TO USING SLEEVE.

13 SLEEVE UNDER WALK OR ROAD

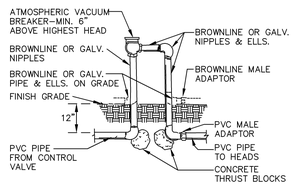

14 ATMOSPHERIC VACUUM BREAKER

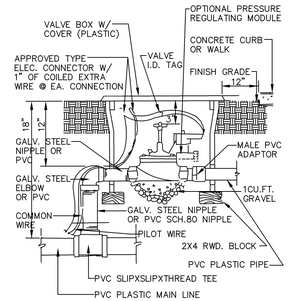

15 REMOTE CONTROL VALVE DETAIL

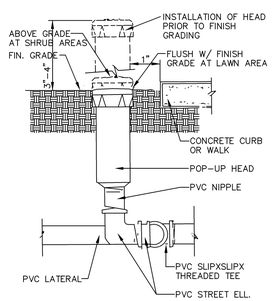

16 4" & 6" POP-UP LAWN/SHRUB HEAD

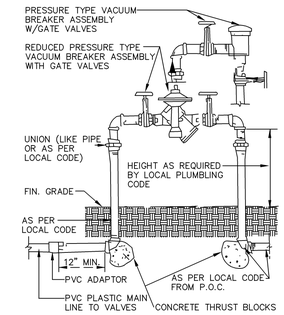

17 RP/PRESSURE TYPE VAC. BREAKER

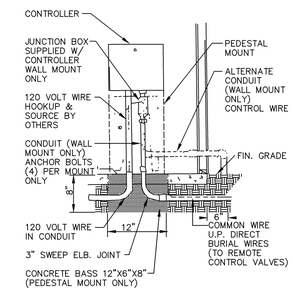

18 CONTROLLER DETAIL

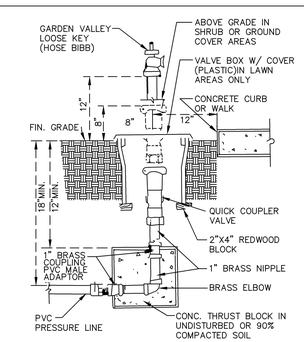

19 QUICK COUPLER /HOSE BIBB DETAIL

THIS DRAWING AND THE DESIGN SHOWN ARE THE PROPERTY OF SPRING ENGINEERING, INC. AND ARE NOT TO BE REPRODUCED, COPIED, PUBLISHED, OR USED IN WHOLE OR PART WITHOUT WRITTEN CONSENT. THEY ARE TO BE USED ONLY FOR THE SITE AND PROJECT IDENTIFIED AND SHALL BE RETURNED UPON REQUEST.

100%
CONSTRUCTION PLANS
ISSUE DATE: 10/05/12

REVISIONS

REV	DATE	DESCRIPTION

ROLAND P. DOVE, P.E.
FL REG. No. 36953
DATE

CLOMPARK 75

LOT 10
Near East Corner of C.R. 54 and Pet Lane
Pasco County, FL 35559

CONTRACT DATE:
May 9, 2012

SPRING ENGINEERING, INC.
ENGINEERING • LAND PLANNING • ARCHITECTURE
3014 U.S. HWY 19, HOLIDAY, FL (727) 938-1516
FL COA NO. 00005158 & LICENSE NO. AA-C001747

LANDSCAPE AND IRRIGATION DETAILS

DESIGNED BY: RPD
DRAWN BY: RPD
CHECKED BY: RPD
JOB NO.
2012-28
SHEET NO.
C5.2

SECTION 14, TOWNSHIP 26 SOUTH, RANGE 19 EAST
PASCO COUNTY, FLORIDA

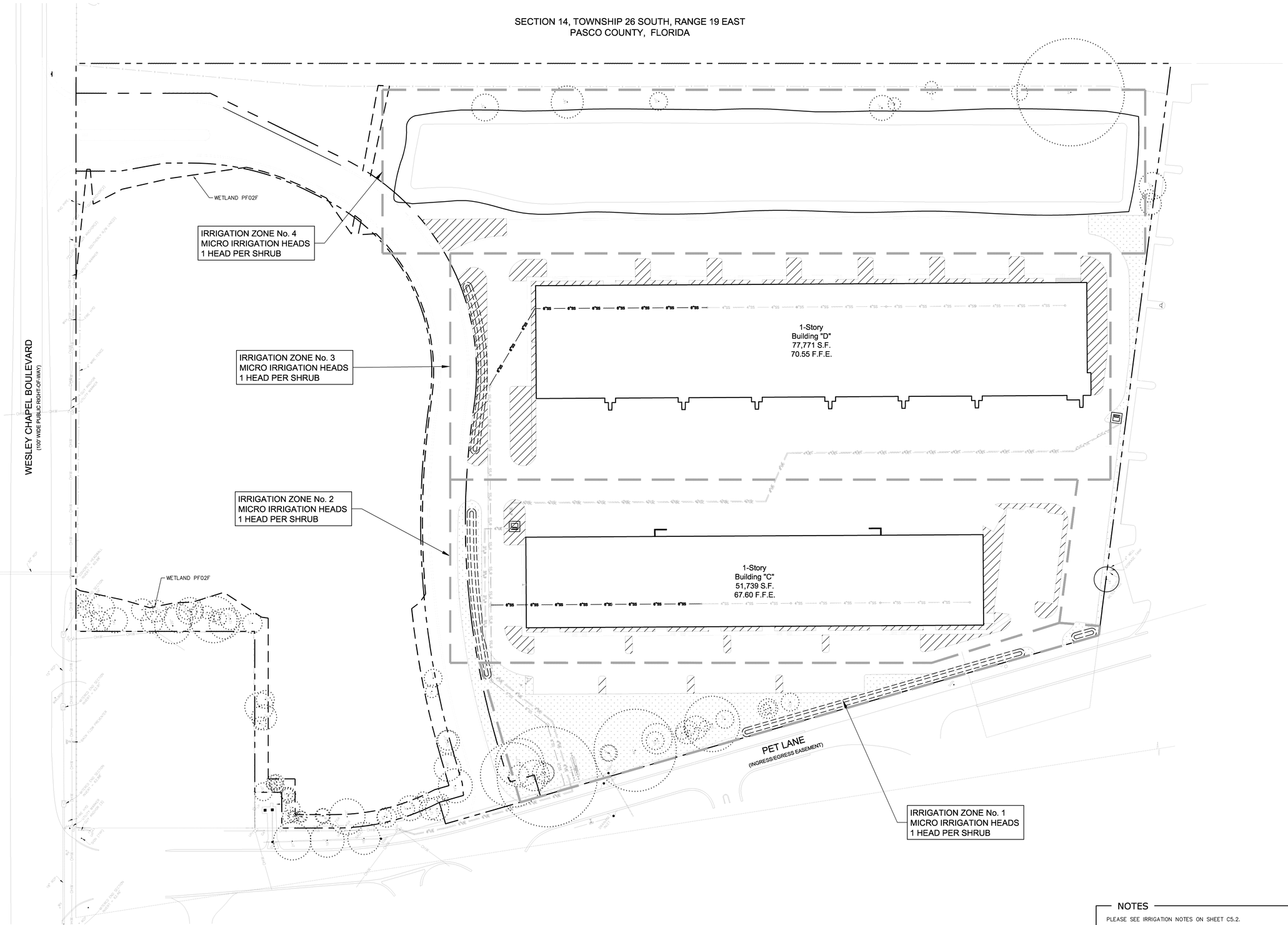

NORTH

IRRIGATION PLAN

SCALE: 1"=50'

0 25 50 100 150

NOTES

PLEASE SEE IRRIGATION NOTES ON SHEET C5.2.

THIS DRAWING AND THE DESIGN SHOWN ARE THE PROPERTY OF SPRING ENGINEERING, INC. AND ARE NOT TO BE REPRODUCED, COPIED, PUBLISHED, OR USED IN WHOLE OR PART WITHOUT WRITTEN CONSENT. THEY ARE TO BE USED ONLY FOR THE SITE AND PROJECT IDENTIFIED AND SHALL BE RETURNED UPON REQUEST.

100%
CONSTRUCTION PLANS
ISSUE DATE: 10/05/12

REVISIONS

REV	DATE	DESCRIPTION

ROLAND P. DOVE, P.E.
FL REG. No. 36533
DATE

COMPARK 75

LOT 10
Near East Corner of C.R. 54 and Pet Lane
Pasco County, FL 35559

CONTRACT DATE:
May 9, 2012

SPRING ENGINEERING, INC.
ENGINEERING • LAND PLANNING • ARCHITECTURE
3014 U.S. HWY 19, HOLIDAY, FL (727) 938-1516
FL COA NO. 00005158 & LICENSE NO. AA-C001747

IRRIGATION PLAN

DESIGNED BY: RPD
DRAWN BY: RPD
CHECKED BY: RPD
JOB NO.
2012-28
SHEET NO.
C6.0

GENERAL NOTES

A. THE LOCATIONS, ELEVATIONS AND DIMENSIONS OF EXISTING UTILITIES, STRUCTURES AND OTHER FEATURES ARE SHOWN ACCORDING TO THE BEST INFORMATION AVAILABLE AT THE TIME OF THE PREPARATION OF THESE PLANS BUT DO NOT PURPORT TO BE ABSOLUTELY CORRECT. THE CONTRACTOR SHALL FIELD VERIFY THE LOCATIONS, ELEVATIONS AND DIMENSIONS OF ALL EXISTING UTILITIES, STRUCTURES AND OTHER FEATURES AFFECTING HIS WORK PRIOR TO BIDDING AND DETERMINE THE EXACT LOCATION OF THE UTILITIES PRIOR TO CONSTRUCTION. THE CONTRACTOR SHALL NOTIFY SUNSHINE @ (800)432-4770 AND THE UTILITY COMPANIES IN THE AREA AT LEAST 48 HOURS BEFORE COMMENCING WORK. REPAIR AND REPLACEMENT OF ALL PRIVATE AND PUBLIC PROPERTY AFFECTED BY THIS WORK SHALL BE RESTORED TO A CONDITION EQUAL TO OR BETTER THAN EXISTED BEFORE COMMENCING CONSTRUCTION UNLESS SPECIFICALLY EXEMPTED BY THE PLANS. COST TO BE INCIDENTAL TO OTHER CONSTRUCTION AND NO EXTRA COMPENSATION TO BE ALLOWED.

B. ALL WORK SHALL BE LEFT IN SUCH A MANNER THAT IT IS SAFE TO THE PUBLIC. THE CONTRACTOR SHALL MAINTAIN TRAFFIC AT ALL TIMES. SIGNS AND BARRICADES TO BE ACCORDING TO F.D.O.T. MANUAL OF SAFE PRACTICES; REFERENCE F.D.O.T. INDEXES 600 THROUGH 650 AND 17349 PER ROADWAY AND TRAFFIC DESIGN STANDARDS LATEST EDITION OF D.C. INDEXES 100 THROUGH 116. THERE WILL BE NO ON-SITE BURNING.

C. ADDITIONAL CONTROL AND SCOPE OF WORK: THE CONTRACTOR SHALL PROVIDE SPRING ENGINEERING, INC. WITH AS-BUILT DRAWINGS AND SURVEYS UPON COMPLETION OF ALL WORK.

D. A SURVEYOR SHALL DO ALL BUILDING LAYOUT, CURB & ROADWAY, AND GRADE STAKING. THE CONTRACTOR SHALL VERIFY ALL DIMENSIONS IN THE FIELD AND REPORT ANY DISCREPANCIES TO THE ENGINEER PRIOR TO STARTING ANY WORK. THE CONTRACTOR SHALL CONTACT THE ENGINEER'S OFFICE IMMEDIATELY ON ANY CONFLICTS ARISING DURING CONSTRUCTION OF ANY IMPROVEMENTS SHOWN ON THESE DRAWINGS. IT SHALL BE THE CONTRACTOR'S RESPONSIBILITY TO CONSULT WITH THE ENGINEER FOR MAKING ANY AND ALL REQUIRED INTERPRETATIONS OF THE PLANS; HOWEVER, THIS IN NO WAY RELIEVES THE CONTRACTOR OF HIS RESPONSIBILITY FOR CONSTRUCTING THE PROJECT TO ACCOMPLISH THE INTENT OF THE PLANS. ALL ELEVATIONS REFER TO NORTH AMERICAN VERTICAL DATUM OF 1988. MEAN SEA LEVEL = 0.00.

E. PERMITS: NO CONSTRUCTION SHALL COMMENCE UNTIL ALL APPLICABLE PERMITS HAVE BEEN APPROVED. A RIGHT-OF-WAY USE PERMIT IS REQUIRED PRIOR TO THE COMMENCEMENT OF ANY CONSTRUCTION ACTIVITY WITHIN THE RIGHT-OF-WAY, AND NO IRRIGATION SYSTEM OR LANDSCAPING SHALL BE INSTALLED IN ANY PUBLIC RIGHT-OF-WAY WITHOUT ISSUANCE OF APPROPRIATE PERMIT. ALL PROPOSED SIGNS MUST BE APPLIED FOR, APPROVED AND PERMITTED ON AN INDIVIDUAL BASIS APART FROM ANY ULTIMATELY APPROVED SITE PLAN; APPROVAL OF THIS SITE PLAN DOES NOT CONSTITUTE APPROVAL OF ANY SIGN.

F. STRIPING: HANDICAPPED PARKING SPACES WILL BE PROPERLY SIGNED AND STRIPED IN ACCORDANCE WITH FLORIDA STATUTE 316. THE MANUAL ON UNIFORM TRAFFIC CONTROL DEVICES, OR OTHER APPLICABLE STANDARDS. ALL ON-SITE PARKING SPACES SHALL BE STRIPED AND SIGNED IN ACCORDANCE WITH THE MANUAL ON UNIFORM TRAFFIC CONTROL DEVICES, LATEST EDITION. PARKING SPACES, DIRECTIONAL ARROWS, AND STOP BARS SHALL BE STRIPED IN WHITE. IT SHALL BE THE OWNER/DEVELOPERS RESPONSIBILITY TO PROPERLY SIGN AND STRIPE THE SITE IN ACCORDANCE WITH APPLICABLE STANDARDS.

G. CONCRETE: CONCRETE SHALL HAVE A COMPRESSIVE STRENGTH OF 3,000 PSI AT 28 DAYS. PORTLAND CEMENT SHALL CONFORM TO ASTM C150. AGGREGATE SHALL CONFORM TO ASTM C33. WIRE FABRIC SHALL CONFORM TO ASTM A185. READY MIXED CONCRETE SHALL CONFORM TO ASTM C-94. SIX INCH MESH, 10 GAUGE WIRE FABRIC SHALL BE USED IN SLABS THICKER THAN FOUR INCHES. STANDARD THICKNESS SHALL BE FOUR INCHES, EXCEPT AT DRIVEWAYS WHERE THE THICKNESS SHALL BE SIX INCHES. SURFACES SHALL BE FREE FROM TROWEL OR MACHINE MARKS. SURFACE VARIATIONS SHALL NOT EXCEED 1/4 INCH UNDER A 10 FOOT STRAIGHTEDGE. EDGE OF SLABS SHALL HAVE A SMOOTH FINISH. SIDEWALKS SHALL HAVE A BROOM FINISH.

H. UTILITIES: ALL UNDERGROUND UTILITIES MUST BE INSTALLED BEFORE BASE AND SURFACE COURSES ARE CONSTRUCTED. SITE CONTRACTOR IS RESPONSIBLE FOR INSTALLING ALL UTILITIES IN ACCORDANCE WITH LOCAL CODES, WHETHER INDICATED ON THE PLANS OR NOT. CHECK WITH THE LOCAL GOVERNMENT PRIOR TO BID SUBMISSION. THE CONTRACTOR SHALL TAKE ALL NECESSARY MEASURES TO MINIMIZE INTERRUPTIONS OF EXISTING UTILITY SERVICE DURING CONSTRUCTION AND CONNECTION OF PROPOSED SERVICE LINES. CONFLICTS BETWEEN WATER LINES AND STORM/SANITARY SEWER SYSTEMS ARE TO BE RESOLVED BY ADJUSTING WATER LINES AS NECESSARY. CONTRACTOR SHALL MAINTAIN A MINIMUM OF TEN FOOT (10') HORIZONTAL SEPARATION OR 18" VERTICAL SEPARATION WHERE UNDERGROUND SERVICES CONFLICT. PIPE MEASUREMENTS ARE TO CENTER OF STRUCTURES AND ALL LENGTHS ARE PLUS OR MINUS.

I. WATERMAINS: ALL NEW WATERMAINS, PIPES, FITTINGS, VALVES, PACKING AND JOINTING MATERIALS SHALL CONFORM WITH ALL APPLICABLE AWWA STANDARDS AND THE STATE PLUMBING CODE AND SHALL BE INSTALLED IN ACCORDANCE WITH APPLICABLE AWWA STANDARDS AND/OR THE MANUFACTURER'S RECOMMENDED PROCEDURES. ALL WATER MAIN PIPES AND FITTINGS SHALL CONTAIN NO MORE THAN EIGHT PERCENT LEAD. ALL STONES FOUND IN WATER MAIN TRENCHES SHALL BE REMOVED TO A DEPTH OF AT LEAST SIX INCHES BELOW THE BOTTOM OF THE PIPE. CONTINUOUS AND UNIFORM BEDDING TO BE PROVIDED AND BACKFILL MATERIAL SHALL BE TAMPED IN LAYERS AROUND THE PIPE AND FITTINGS AND TWELVE INCHES (12") ABOVE THE TOP OF THE PIPE TO ADEQUATELY SUPPORT AND PROTECT THE PIPE. ALL NEW WATER MAINS SHALL BE PRESSURE AND LEAK TESTED PER AWWA STANDARD C600 AND DISINFECTED PER AWWA STANDARD C651 AND RULE 62.555.345,F.A.C.. ALL FOUR INCH (4") AND LARGER WATER MAINS TO BE C-900 P.V.C. AND ALL WATER MAINS SMALLER THAN 4" TO BE SCHEDULE 40 P.V.C. WATER MAIN TO BE 2.5' (MIN.) BELOW PROPOSED GRADE.

J. SANITARY SEWERS: ALL SANITARY SEWER MAINS TO BE SDR-35 PVC.

K. TREE BARRICADES AND EROSION CONTROL: ALL EROSION CONTROL MEASURES (SILT BARRIERS) AND TREE BARRICADES MUST BE INSTALLED PRIOR TO THE START OF CONSTRUCTION AND REMAIN IN PLACE THROUGHOUT CONSTRUCTION. ENCROACHMENT OR FAILURE TO MAINTAIN THESE BARRICADES COULD RESULT IN ENFORCEMENT ACTION WHICH MAY INCLUDE CITATIONS AND/OR PERMIT REVOCATION. SILTATION BARRIERS SHALL BE MAINTAINED AND REPAIRED AT THE END OF EACH WORKING DAY. HAY BALES SHALL BE INSTALLED ONCE PERIMETER GRADING IS COMPLETED. STORMWATER FACILITIES SHALL HAVE HAY BALES PLACED AROUND THEIR ENTRANCES TO PREVENT SEDIMENT FROM BEING TRANSPORTED INTO THE STORMWATER SYSTEM. HAY BALES SHALL BE PLACED ALONG THE PERIMETER OF ALL DOWNSTREAM BOUNDARIES TO PROVIDE FILTRATION OF RUNOFF DURING CONSTRUCTION. THE HAY BALES SHALL REMAIN IN PLACE UNTIL THE ENGINEER HAS APPROVED THE VEGETATIVE COVER ALONG EMBANKMENTS PROVIDING RUNOFF TO THE PERIMETER. IT IS THE CONTRACTOR'S RESPONSIBILITY TO MAINTAIN SOIL EROSION CONTROL DEVICES. IF AT ANY TIME DRAINAGE STRUCTURES OR EROSION CONTROL DEVICES BECOME DAMAGED OR INOPERABLE, IT IS THE CONTRACTORS RESPONSIBILITY TO REPAIR THEM. THE CONTRACTOR IS EXPECTED, AT THE END OF EACH DAY, TO HAVE THE SITE GRADED IN SUCH A WAY THAT ADJACENT PROPERTIES ARE NOT ADVERSELY IMPACTED BY EROSION OR SEDIMENT LEAVING THE SITE. CLEARED AREAS SHALL BE STABILIZED EARLY IN THE CONSTRUCTION PROCESS AND IF NATURAL PRECIPITATION DOES NOT PROVIDE PERIODIC WETTING OF THE SITE, THEN THE CONTRACTOR SHALL PROVIDE A METHOD OF SPRAYING THE SITE TO PREVENT WIND EROSION. CONTRACTOR SHALL CLEAR ONLY THAT AREA SHOWN TO BE CLEARED ON THE PLAN. CARE SHALL BE TAKEN TO DISTURB THE EXISTING VEGETATION IN ONLY THOSE AREAS UNDER CONSTRUCTION AT THAT TIME. ALL CLEAR SITE AREAS SHALL BE KEPT FREE OF ANY SIGNAGE, PLANTINGS, TREES, ETC. IN EXCESS OF THREE-AND-A-HALF (3 1/2) FEET IN HEIGHT. DURING LAND ALTERATION AND CONSTRUCTION ACTIVITIES, IT SHALL BE UNLAWFUL TO REMOVE VEGETATION BY GRUBBING OR TO PLACE SOIL DEPOSITS, DEBRIS, SOLVENTS, CONSTRUCTION MATERIAL, MACHINERY OR OTHER EQUIPMENT OF ANY KIND WITHIN THE DRIPLINE OF A TREE TO REMAIN ON THE SITE UNLESS OTHERWISE APPROVED BY THE LOCAL GOVERNMENT. ALL TREE ROOTS EXISTING WITHIN APPROVED IMPROVEMENT AREAS AND ORIGINATING FROM A PROTECTED TREE SHALL BE SEVERED CLEAN AT THE LIMITS OF THE PRESERVED AREA. ALL TRIMMING UNDERTAKEN ON A TREE PROTECTED BY THE PROVISIONS OF THE LAND DEVELOPMENT CODE SHALL BE PRUNED IN ACCORDANCE WITH THE NATIONAL ARBORIST ASSOCIATION (NAA) PRUNING STANDARDS.

L. GRADING AND BACKFILL: THE GRADING SHOWN ON THESE PLANS IS INTENDED TO EXPRESS THE GENERAL GRADING INTENT OF THE PROJECT. THE CONTRACTOR IS EXPECTED TO GRADE THE ENTIRE SITE TO PROVIDE POSITIVE DRAINAGE IN ALL AREAS THROUGHOUT THE SITE. SMOOTH TRANSITIONS SHALL BE PROVIDED BETWEEN CONTOURS OR SPOT ELEVATIONS AS SHOWN ON THE PLANS TO ACCOMPLISH THE GRADING INTENT. ALL SLOPES SHALL BE STABILIZED IMMEDIATELY AFTER FINAL GRADING HAS BEEN COMPLETED. CONTRACTOR TO GRADE PROPERTY SO THAT GRADING MEETS ADJACENT PROPERTY AND RIGHT - OF - WAY ELEVATIONS. CONTRACTOR SHALL NOTIFY THE OWNER AND SEI PRIOR TO DEMOBILIZATION OF GRADING EQUIPMENT TO DETERMINE THAT THE GRADING INTENT HAS BEEN ACHIEVED. ALL FILL MATERIAL SHALL BE SOIL OR SOIL-ROCK MIXTURE WHICH IS FREE FROM ORGANIC MATTER AND OTHER DELETERIOUS SUBSTANCE. IT SHALL BE PREDOMINATELY GRANULAR WITH A MAXIMUM PARTICLE SIZE OF TWO INCHES AND A PLASTICITY INDEX OF 12 OR LESS. ALL BACKFILL WITHIN THE ROADWAY, OVER ANY PIPE THAT IS TO BE INSTALLED UNDER THE ROADWAY OR WITHIN EMBANKMENTS, ETC. IS TO BE COMPACTED TO 100% OF MAXIMUM DENSITY AS DETERMINED BY AASHTO AND PER F.D.O.T. SPECIFICATIONS, SECTION 125.8.3, LATEST EDITION.

M. DRAINAGE: ALL DRAINAGE STRUCTURES MUST BE CONSTRUCTED PER FLORIDA DEPARTMENT OF TRANSPORTATION ROAD DESIGN STANDARDS. MITERED END SECTION AS PER D.O.T. INDEX NO. 272 AND NO. 273. ALL PIPE LENGTHS ARE PLUS OR MINUS AND MEASUREMENTS ARE TO THE CENTER OF STRUCTURES. OWNER SHALL MAINTAIN RETENTION AREAS.

N. DRIVES: ALL DRIVES SHALL BE IN ACCORDANCE WITH FDOT REQUIREMENTS.

O. PAVING: ALL PAVING SURFACES IN INTERSECTIONS AND ADJACENT SECTIONS SHALL BE GRADED TO DRAIN POSITIVELY IN THE DIRECTION SHOWN BY THE FLOW ARROWS ON THE PLANS AND TO PROVIDE A SMOOTH TRANSITION WITH NO BREAKS IN GRADE AND NO STEEP OR REVERSE CROSS SLOPES. AT APPROACHES TO AND INTERSECTIONS WITH EXISTING ROADWAYS, IT MAY BE NECESSARY AND ADVISABLE TO MAKE MINOR LOCAL FIELD ADJUSTMENTS TO ACCOMPLISH THE PURPOSES OUTLINED. IT IS THE CONTRACTORS RESPONSIBILITY TO ENSURE POSITIVE DRAINAGE AND SEI SHALL BE CONSULTED SO THAT WE MAY MAKE ANY AND ALL REQUIRED INTERPRETATIONS OF THE PLANS OR GIVE SUPPLEMENTARY INSTRUCTIONS TO ACCOMPLISH THE INTENT OF THE PLANS. ASPHALTIC CONCRETE TYPE S-1, SHALL CONFORM TO THE FLORIDA DEPARTMENT OF TRANSPORTATION STANDARD SPECIFICATIONS FOR ROAD AND BRIDGE CONSTRUCTION LATEST EDITION, FOR MATERIALS AND METHOD OF CONSTRUCTION. ALL ROADWAY BASES SHALL BE PRIMED AND, IF REQUIRED, A TACK COAT SHALL BE APPLIED. ALL MATERIALS AND CONSTRUCTION METHODS SHALL CONFORM TO THE FLORIDA DEPARTMENT OF TRANSPORTATION STANDARD SPECIFICATIONS FOR ROAD AND BRIDGE CONSTRUCTION, LATEST EDITION. TEST REPORTS FOR SUBGRADE, BASE, ASPHALT AND BASE CORE AND CONCRETE SHALL BE SUBMITTED TO THE ENGINEER OF RECORD FOR REVIEW AND APPROVAL. SEE SPECIFICATIONS FOR SPECIFIC TESTING REQUIREMENTS.

P. LANDSCAPING: ALL PLANT MATERIALS USED SHALL CONFORM TO THE STANDARDS FOR FLORIDA NO. 1 OR BETTER AS GIVEN IN GRADES AND STANDARDS FOR NURSERY PLANTS, PART I, 1963 AND PART II, STATE OF FLORIDA DEPT. OF AGRICULTURE, TALLAHASSEE. ALL PLANT MATERIAL WILL BE GUARANTEED FOR ONE (1) YEAR FROM DATE OF FINAL ACCEPTANCE BY ARCHITECT. PLANTS AND TREES ARE LOCATED BY SCALING OFF PLANS. INSTALLER SHALL INSPECT SITE PRIOR TO BEGINNING PLANTING OPERATIONS AND NOTIFY ARCHITECT OF ANY DISCREPANCIES. INSTALLER SHALL IMMEDIATELY NOTIFY ARCHITECT IF ANY CONFLICTS OCCUR BETWEEN PROPOSED LOCATION OF TREES CALLED FOR ON THE PLANS AND ANY UNDERGROUND UTILITIES OR SUBSURFACE STRUCTURES. INSTALLER SHALL NOTIFY ARCHITECT OF ANY CONDITION THAT WOULD PREVENT THE HEALTHY GROWTH OF PLANT SPECIES CALLED FOR ON THESE PLANS PRIOR TO CONTRACT AWARD. ALL LANDSCAPE AREAS AND GRADED SWALES ARE TO BE SODDED WITH FLORATAM UNLESS NOTED OTHERWISE. THE GROUND IS TO BE PROPERLY PREPARED AND FERTILIZED PRIOR TO LAYING SOD. THERE SHALL BE A CRISP LINE SEPARATING PLANT BEDS FROM ALL SOD AREAS. SOD TO BE STAKED AS NECESSARY TO PREVENT EROSION. CONTRACTOR TO SOD ALL DISTURBED AREAS DUE TO PROPOSED CONSTRUCTION.

Q. PLANTING SOILS: ALL PLANTING PITS SHALL BE BACKFILLED WITH TOPSOIL MIX CONSISTING OR FIFTY (50) PERCENT SAND, FORTY (40) PERCENT MUCK AND TEN (10) PERCENT HUMUS OR PEAT, BY VOLUME, WELL MIXED WITH APPROPRIATE FERTILIZER ADDED.

R. MULCH: ALL EXPOSED AREAS IN PLANTING BEDS, INCLUDING HEDGE ROWS, SHALL BE KEPT WEED FREE AND MULCHED TO A MINIMUM OF THREE (3) INCHES DEPTH, EXCEPT THAT TWO (2) INCHES SHALL BE REQUIRED IN ANNUAL BEDS. MULCH SHALL BE REPLENISHED, AS NEEDED, TO MEET THIS REQUIREMENT.

SEPARATION FOR WATER/SEWER CONFLICTS

1. SANITARY SEWERS, FORCE MAINS AND STORM SEWERS SHOULD ALWAYS CROSS UNDER WATER MAINS. SANITARY SEWERS, FORCE MAINS AND STORM SEWERS CROSSING WATER MAINS SHALL BE LAID TO PROVIDE A MINIMUM VERTICAL DISTANCE OF 18 INCHES BETWEEN THE INVERT OF THE UPPER PIPE AND THE CROWN OF THE LOWER PIPE WHENEVER POSSIBLE.

   WHERE SANITARY SEWERS, FORCE MAINS AND STORM SEWERS MUST CROSS A WATER MAIN WITH LESS THAN 18 INCHES VERTICAL DISTANCE, BOTH THE SEWER AND THE WATER MAIN SHALL BE CONSTRUCTED OF DUCTILE IRON PIPE (DIP) AT THE CROSSING. SUFFICIENT LENGTHS OF DIP MUST BE USED TO PROVIDE A MINIMUM SEPARATION OF 10 FEET BETWEEN ANY TWO JOINTS. ALL JOINTS ON THE WATER MAIN WITHIN 20 FEET OF THE CROSSING MUST BE LEAK FREE AND MECHANICALLY RESTRAINED. A MINIMUM VERTICAL CLEARANCE OF 6 INCHES MUST BE MAINTAINED AT THE CROSSING.

   WHERE THERE IS NO ALTERNATIVE TO SEWER PIPES CROSSING OVER THE WATER MAIN, THE CRITERIA FOR MINIMUM SEPARATION OF 18 INCHES BETWEEN LINES AND 10 FEET BETWEEN JOINTS SHALL BE REQUIRED.

   ALL CROSSINGS SHALL BE ARRANGED SO THAT THE SEWER PIPE JOINTS AND THE WATER MAIN PIPE JOINTS ARE EQUIDISTANT FROM THE POINT OF CROSSING (PIPES CENTERED ON THE CROSSING).

   WHERE A NEW PIPE CONFLICTS WITH AN EXISTING PIPE, THE NEW PIPE SHALL BE CONSTRUCTED OF DIP AND THE CROSSING SHALL BE ARRANGED TO MEET THE REQUIREMENTS ABOVE.

2. A MINIMUM 10 FOOT HORIZONTAL SEPARATION SHALL BE MAINTAINED BETWEEN ANY TYPE OF SEWER & WATER MAIN IN PARALLEL INSTALLATION WHENEVER POSSIBLE.

   IN CASES WHERE IT IS NOT POSSIBLE TO MAINTAIN 10 FOOT HORIZONTAL SEPARATION THE WATER MAIN MUST BE LAID IN A SEPARATE TRENCH OR ON AN UNDISTURBED EARTH SHELF LOCATED ON ONE SIDE OF THE SEWER OR FORCE MAIN AT SUCH AN ELEVATION THAT THE BOTTOM OF THE WATER MAIN IS AT LEAST 18 INCHES ABOVE THE TOP OF THE SEWER.

   WHERE IT IS NOT POSSIBLE TO MAINTAIN A VERTICAL DISTANCE OF 18 INCHES IN PARALLEL INSTALLATIONS THE WATER MAIN SHALL BE CONSTRUCTED OF DIP AND THE SEWER OR THE FORCE MAIN SHALL BE CONSTRUCTED OF DIP WITH A MINIMUM VERTICAL DISTANCE OF 6 INCHES. THE WATER MAIN SHOULD ALWAYS BE ABOVE THE SEWER. JOINTS ON THE WATER MAIN SHALL BE LOCATED AS FAR APART AS POSSIBLE FROM JOINTS ON THE SEWER OR FORCE MAIN (STAGGERED JOINTS).

3. ALL DIP SHALL BE CLASS 50 OR HIGHER. ADEQUATE PROTECTIVE MEASURES AGAINST CORROSION SHALL BE AS REQUIRED BY THE PERMITTING UTILITIES DEPARTMENT.

THIS DRAWING AND THE DESIGN SHOWN ARE THE PROPERTY OF SPRING ENGINEERING, INC. AND ARE NOT TO BE REPRODUCED, COPIED, PUBLISHED, OR USED IN WHOLE OR PART WITHOUT WRITTEN CONSENT. THEY ARE TO BE USED ONLY FOR THE SITE AND PROJECT IDENTIFIED AND SHALL BE RETURNED UPON REQUEST.

100%
CONSTRUCTION PLANS
ISSUE DATE: 10/05/12

REVISIONS

REV	DATE	DESCRIPTION

ROLAND P. DOVE, P.E.
FL REG. No. 36953
DATE

CIOMPARK 75

LOT 10
Near East Corner of C.R. 54 and Pet Lane
Pasco County, FL 35559

CONTRACT DATE:
May 9, 2012

SPRING ENGINEERING, INC.
ENGINEERING • LAND PLANNING • ARCHITECTURE
3014 U.S. HWY 19, HOLIDAY, FL (727) 938-1516
FL COA NO. 00005158 & LICENSE NO. AA-C001747

GENERAL NOTES

DESIGNED BY: RPD
DRAWN BY: RPD
CHECKED BY: RPD
JOB NO.
2012-28
SHEET NO.
C7.0