McDONALD'S RESTAURANT
A PORTION OF SECTION 30, TOWNSHIP 26 SOUTH,
RANGE 17 EAST, PASCO COUNTY FLORIDA
McDONALD'S PARCEL CONTAINS
61,200 SQUARE FEET OR 1.40 ACRES, MORE OR LESS
PASCO COUNTY PARCEL I.D. #:
30-26-17-0000-00400-0030

SIMULTANEOUS SUBMITTAL
FOR

McDONALD'S - L/C: 009/2550
McDONALD'S RESTAURANT
STATE ROAD 54 & COUNTRY PLACE
PASCO COUNTY, NEW PORT RICHEY, FLORIDA

LAND OWNER:
CROSSROAD PROPERTIES, LLC
3001 ENTERPRISE ROAD EAST
CLEARWATER, FLORIDA 33759-1304
ATTN: RICHARD D. CROSSLAND
PHONE: (727) 791-9393

DEVELOPER:
McDONALD'S USA, LLC - FLORIDA REGION
10150 HIGHLAND MANOR DRIVE, SUITE 470
TAMPA, FLORIDA 33610
ATTN: STEPHANIE TYRRELL
PHONE: (813) 630-9634

CIVIL ENGINEER:
ADAMS
27524 CASHFORD CIRCLE, STE. 101
WESLEY CHAPEL, FLORIDA 33544
ATTN: TIM D. HODES, P.E.
PHONE: (813) 929-7499

SURVEYOR:
GEORGE A. SHIMP II & ASSOCIATES, INC.
3301 DeSOTO BOULEVARD, SUITE D
PALM HARBOR, FLORIDA 34683
ATTN: TREY SHIMP
PHONE: (727) 784-5496

LANDSCAPE ARCHITECT:
ENVIRONMENTAL DESIGN
1920 SE 8TH STREET
OCALA, FLORIDA 34478
ATTN: RICHARD A. KESSELRING JR., PLA, ASLA
PHONE: (352) 622-8899

WATER & SEWER UTILITIES:
FLORIDA GOVERNMENTAL UTILITY AUTHORITY (FGUA)
6915 PERRINE RANCH ROAD
NEW PORT RICHEY, FLORIDA 34655
ATTN: MATTHEW RIHS
PHONE: (727) 372-0115

ELECTRIC:
DUKE ENERGY
4121 ST. LAWRENCE DRIVE
NEW PORT RICHEY, FLORIDA 34653
ATTN: ERIK ENNIS
PHONE: (727) 372-5114

TELEPHONE:
VERIZON
1280 CLEVELAND STREET
CLEARWATER, FLORIDA 33755
ATTN: DAN SULLIVAN
PHONE: (727) 562-1190

GAS:
CLEARWATER GAS SYSTEM
400 N. MYRTLE AVENUE
CLEARWATER, FLORIDA 33755
ATTN: JORGE HERNANDEZ, P.E.
PHONE: (727) 562-4900 EXT. 7423

ARCHITECT:
HARTLEY+PURDY ARCHITECTURE, INC.
1711 NORTH HIMES AVENUE
TAMPA, FLORIDA 33607
ATTN: SCOTT PURDY
PHONE: (813) 353-0035

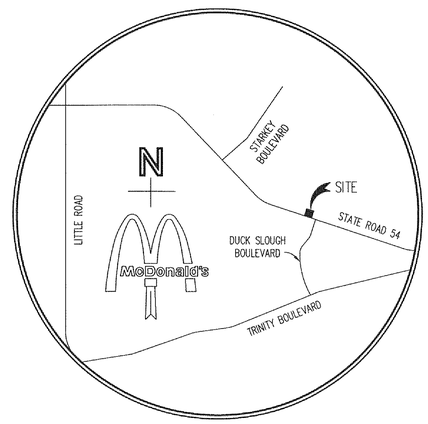

VICINITY MAP
NOT TO SCALE

SHEET INDEX	
Sheet Number	Sheet Title
C1.0	COVER SHEET
C2.0	BOUNDARY AND TOPOGRAPHIC SURVEY (1 OF 3)
C2.1	BOUNDARY AND TOPOGRAPHIC SURVEY (2 OF 3)
C2.2	BOUNDARY AND TOPOGRAPHIC SURVEY (3 OF 3)
C2.3	GENERAL NOTES
C3.0	EROSION CONTROL PLAN
C3.1	STANDARD EROSION CONTROL DETAILS
C3.2	STORM WATER POLLUTION PREVENTION PLAN
C4.0	SITE PLAN
C5.0	PAVING PLAN
C5.1	DRIVE-THRU CONTROL PLAN
C6.0	GRADING PLAN
C7.0	STORMWATER MANAGEMENT PLAN
C8.0	UTILITY PLAN
D1.0	PASCO COUNTY STANDARD DETAILS
D1.1	STANDARD DETAILS
LP1.0	PHOTOMETRIC PLAN
L1.0	LANDSCAPE PLAN
IR1.0	IRRIGATION PLAN

PASCO COUNTY PROJECT HISTORY			
TYPE	NUMBER	DATE	STATUS
REZONING	RZ 2012	12/28/1982	APPROVED
REZONING	RZ 3673	06/23/1987	APPROVED
COMMON PLAN OF DEVELOPMENT	IPR01-115	11/06/2002	APPROVED
PRELIMINARY/CONSTRUCTION PLAN	IIPR06-036	12/06/2007	APPROVED

**** FEMA NOTE ****

Flood Statement: According to Community Panel No. 1202300360D, Dated SEPTEMBER 30, 1992, of the Federal Emergency Management Agency, National Flood Insurance Program Map, this property is within flood zone "X", which is not a special flood hazard area. If this site is not within an identified special flood hazard area, this flood statement does not imply that the property and/or the structures thereon will be free from flooding or flood damage. On rare occasions, greater floods can and will occur and flood heights may be increased by man-made or natural causes. This statement shall not create liability on the part of the Surveyor or Engineer.

**** NOTICE TO CONTRACTOR - BIDDING ****

All questions regarding the General Contractor's preparation of his bid shall be directed to the McDonald's Construction Department. Sub-contractors must direct their questions through the General Contractor only. The Consulting Architect and/or Engineer shall not be contacted by the General Contractors, Sub-contractors, or Suppliers without direct prior authorization from McDonald's

**** NOTICE TO CONTRACTORS - TOPOGRAPHIC SURVEY ****

Topographic information taken from a Topographic Survey performed by GEORGE A. SHIMP II & ASSOC., INC. The Contractor shall notify the Engineer immediately, in writing, of any discrepancies or omissions to the topographic information. The Contractor(s) shall be responsible for confirming the location (horizontal/vertical) of any buried cables, conduits, pipes, and structures (storm sewer, sanitary sewer, water, gas, television, telephone, etc.) which impact the construction site. The Contractor(s) shall notify the Owner and Engineer if any discrepancies are found between the actual conditions versus the data contained in the construction plans. Any costs incurred as the result of not confirming the actual location (horizontal/vertical) of said cables, conduits, pipes, and structures shall be borne by the Contractor. Additionally, the Contractor(s) shall notify the Owner and Engineer if any errors or discrepancies are found on the construction documents (psite), which negatively impact the project. The Engineer and Owner shall be indemnified of problems and/or cost which may result from Contractor's failure to notify Engineer and Owner.

***** STOP! CALL BEFORE YOU DIG! *****

As required by the "Underground Facility Damage Prevention and Safety Act" Florida One Call System must be contacted (811) at least 48 hours prior to any excavation operations being performed. It is the Contractor's responsibility to contact Florida One Call System.

BENCHMARK

THE ELEVATIONS SHOWN HEREON ARE BASED ON THE NORTH AMERICAN VERTICAL DATUM OF 1988 (N.A.V.D. 1988) AS ESTABLISHED FROM N.G.S. BENCH MARK "R 668", WITH AN ELEVATION OF 40.89 FEET N.A.V.D. 1988 (TO CONVERT ELEVATIONS TO N.G.V.D. 1929, ADD 0.84 FEET).

THESE PLANS ARE SUBJECT TO REVIEW & APPROVAL BY JURISDICTIONAL ENTITIES.

REV	DATE	DESCRIPTION	BY	ISSUE REF
----	----	----	----	----
----	----	----	----	----
----	----	----	----	----
----	----	----	----	----
----	----	----	----	----

Adams
27524 Cashford Circle, Ste. 101 ♦ Wesley Chapel, Florida 33544 ♦ (813) 929-7499
FLORIDA CoA# 27644

TIM D. HODES
LICENSE No. 67017
STATE OF FLORIDA
PROFESSIONAL ENGINEER

McDONALD'S®
THESE PLANS AND SPECIFICATIONS ARE THE PROPERTY OF McDONALD'S CORPORATION AND SHALL NOT BE REPRODUCED WITHOUT THEIR WRITTEN PERMISSION.

OFFICE: FLORIDA REGION
ADDRESS: 10150 HIGHLAND MANOR DRIVE, SUITE 470; TAMPA, FLORIDA 33610

STATE ROAD 54 & COUNTRY PLACE
NEW PORT RICHEY, FLORIDA 34655

McDONALD'S L/C: 009/2550
ADAMS ENGINEERING No. 2013.049

PLAN APPROVALS

	SIGNATURE (2 REQUIRED)	DATE
REGIONAL MGR.		
CONST. MGR.		
OPERATIONS DEPT.		
REAL ESTATE DEPT.		

CO-SIGN SIGNATURES

CONTRACTOR		
OWNER		

STATUS	DATE	BY
DATE DRAWN	02/2014	EAO
PLAN CHECKED	02/2014	TDH
AS-BUILT		

C1.0

FULL PATH: I:_Projects\2012\2013-049_McD Trinity - Duck Slough\Drawings\1.0 COVER SHEET
PLOTTER: Adobe PDF
PLOT TIME: 8:22:43 AM
PLOT DATE: Friday, March 21, 2014
PLOTTED BY: Edgar Diaz
FILENAME: C1.0-COVER SHEET.dwg

McDonald's

STATE ROAD No. 54 & COUNTRY PLACE
SECTION 30, TOWNSHIP 26 SOUTH, RANGE 17 EAST
NEW PORT RICHEY, PASCO COUNTY, FLORIDA

LEGAL DESCRIPTION

McDONALD'S PARCEL

A PARCEL OF LAND LYING IN A PORTION OF SECTION 30, TOWNSHIP 26 SOUTH, RANGE 17 EAST, PASCO COUNTY, FLORIDA, BEING MORE PARTICULARLY DESCRIBED AS FOLLOWS:

COMMENCE AT THE NORTHEAST CORNER OF SECTION 30, TOWNSHIP 26 SOUTH, RANGE 17 EAST, PASCO COUNTY, FLORIDA; THENCE S00°16'17"W, ALONG THE EASTERLY BOUNDARY OF SAID SECTION 30, A DISTANCE OF 3,108.73 FEET; THENCE N71°57'42"W, A DISTANCE OF 650.12 FEET; THENCE S18°02'18"W, A DISTANCE OF 250.00 FEET TO A POINT ON THE NORTHERLY RIGHT-OF-WAY OF STATE ROAD 54; THENCE N71°57'42"W, ALONG SAID NORTHERLY RIGHT-OF-WAY, A DISTANCE OF 370.00 FEET TO THE POINT OF BEGINNING; THENCE CONTINUE N71°57'42"W, ALONG SAID NORTHERLY RIGHT-OF-WAY, A DISTANCE OF 180.00 FEET; THENCE DEPARTING SAID NORTHERLY RIGHT-OF-WAY, N18°02'18"E, A DISTANCE OF 340.00 FEET; THENCE S71°57'42"E, A DISTANCE OF 180.00 FEET; THENCE S18°02'18"W, A DISTANCE OF 340.00 FEET TO THE POINT OF BEGINNING.

TOGETHER WITH A NON-EXCLUSIVE EASEMENT FOR VEHICULAR INGRESS AND EGRESS AS CREATED BY AND SET FORTH IN RECIPROCAL EASEMENT AGREEMENT RECORDED SEPTEMBER 14, 1984 IN OFFICIAL RECORDS BOOK 1362, PAGE 1456, OF THE PUBLIC RECORDS OF PASCO COUNTY, FLORIDA.

TOGETHER WITH A NON-EXCLUSIVE EASEMENT FOR PARKING, INGRESS AND EGRESS AS CREATED BY AND SET FORTH IN DECLARATION OF PROTECTIVE COVENANTS AND GRANT OF EASEMENT FOR COMMERCIAL 54 CENTER RECORDED MARCH 21, 2003 IN OFFICIAL RECORDS BOOK 5283, PAGE 1555, OF THE PUBLIC RECORDS OF PASCO COUNTY, FLORIDA.

McDONALD'S PARCEL CONTAINS 61,200 SQUARE FEET OR 1.40 ACRES, MORE OR LESS.

FLOOD ZONE

THE ABOVE DESCRIBED PROPERTY IS LOCATED IN ZONE X, IN ACCORDANCE WITH THE FIRM MAP OF PASCO COUNTY, COMMUNITY NUMBER 120230 (MAP NUMBER 120230-0360-D), MAP DATED SEPTEMBER 30, 1992.

CERTIFICATION

TO McDONALD'S USA, LLC, A DELAWARE LIMITED LIABILITY COMPANY; McDONALD'S RESTAURANTS OF FLORIDA, INC., A FLORIDA CORPORATION; McDONALD'S CORPORATION, A DELAWARE CORPORATION; AND CHICAGO TITLE INSURANCE COMPANY:

THIS IS TO CERTIFY THAT THIS MAP OR PLAT HAS BEEN COMPILED FROM A SURVEY ACTUALLY MADE ON THE GROUND UNDER MY SUPERVISION; THAT IT IS CORRECT AND COMPLIES WITH THE REQUIREMENTS PROVIDED BY McDONALD'S CORPORATION; THAT IT MEETS MINIMUM TECHNICAL STANDARDS FOR LAND SURVEYS IN THE STATE OF FLORIDA CHAPTER 5J-17 FLORIDA ADMINISTRATIVE CODE, PURSUANT TO SECTION 472.027, FLORIDA STATUTES; AND THAT THIS MAP OR PLAT AND THE SURVEY ON WHICH IT IS BASED WERE MADE IN ACCORDANCE WITH THE 2011 MINIMUM STANDARD DETAIL REQUIREMENTS FOR ALTA/ACSM LAND TITLE SURVEYS, JOINTLY ESTABLISHED AND ADOPTED BY ALTA AND NSPS, AND INCLUDES ITEMS 1, 2, 3, 4, 6(B), 7(A), 8, 9, 11(A), 13, 14, 16, 17 AND 18 OF TABLE A THEREOF. THE FIELD WORK WAS COMPLETED ON JUNE 26, 2013.

George A. Shimp III — 3-18-2014
GEORGE A. SHIMP III — DATE
REGISTRATION NO. 6137

NOTES CORRESPONDING TO SCHEDULE B, SECTION II

FIDELITY NATIONAL TITLE INSURANCE COMPANY TITLE COMMITMENT, COMMITMENT ORDER NUMBER 4420832, DATED JUNE 11, 2013

5.) THE AGREEMENT, AS RECORDED IN O.R. BOOK 667, PAGE 123, AFFECTS THE SITE (DOES NOT CONTAIN ANY PLOTTABLE SURVEY MATTERS).

6.) THE AGREEMENT, AS RECORDED IN O.R. BOOK 992, PAGE 1488, AFFECTS THE SITE (DOES NOT CONTAIN ANY PLOTTABLE SURVEY MATTERS).

7.) THE DEDICATION OF AVIATION EASEMENT, AS RECORDED IN O.R. BOOK 1260, PAGE 1, AFFECTS THE SITE (DOES NOT CONTAIN ANY PLOTTABLE SURVEY MATTERS).

8.) THE RECIPROCAL EASEMENT AGREEMENT, AS RECORDED IN O.R. BOOK 1362, PAGE 1456, AFFECTS THE SITE. THE ON-SITE EASEMENTS CONTAINED THEREIN ARE PLOTTED HEREON.

9.) THE DECLARATION OF PROTECTIVE COVENANTS AND GRANT OF EASEMENT FOR COMMERCIAL 54 CENTER, AS RECORDED IN O.R. BOOK 5283, PAGE 1555, AFFECTS THE SITE. THE ON-SITE EASEMENTS CONTAINED THEREIN ARE PLOTTED HEREON.

PROJECT LOCATION MAP

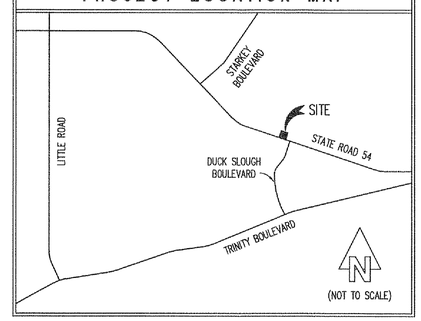

PARCEL DETAIL MAP

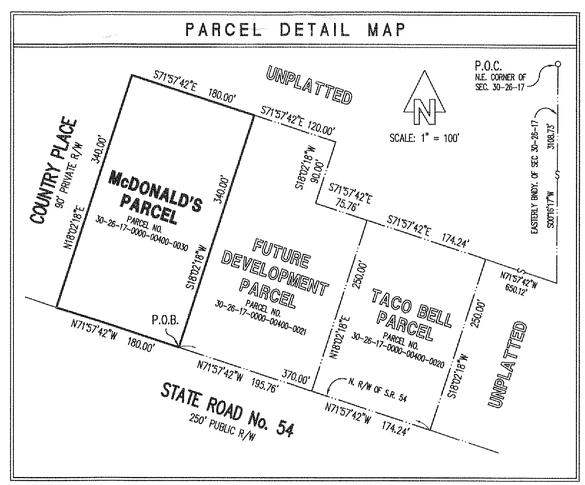

SURVEY ABBREVIATIONS

A = ARC LENGTH
A/C = AIR CONDITIONER
AF = ALUMINUM FENCE
ALUM = ALUMINUM
ASPH = ASPHALT
BFE = BASE FLOOD ELEVATION
BLDG = BUILDING
BLK = BLOCK
BM = BENCH MARK
BNDY = BOUNDARY
BRG = BEARING
BWF = BARBED WIRE FENCE
C = CALCULATED
CB = CHORD BEARING
CBS = CONCRETE BLOCK STRUCTURE
CHD = CHORD
CL = CENTERLINE
CLF = CHAIN LINK FENCE
CLOS = CLOSURE
COL = COLUMN
CONC = CONCRETE
CR = COUNTY ROAD
C/S = CONCRETE SLAB
COR = CORNER
COV = COVERED AREA
D = DEED
DOT = DEPARTMENT OF TRANSPORTATION
DRNG = DRAINAGE
D/W = DRIVEWAY
EL OR ELEV = ELEVATION
EOP = EDGE OF PAVEMENT
EOW = EDGE OF WATER
ESMT = EASEMENT
FCM = FOUND CONCRETE MONUMENT
FES = FLARED END SECTION
FIP = FOUND IRON PIPE
FIR = FOUND IRON ROD
FL = FLOW LINE
FLD = FIELD
FND = FOUND
FOP = FOUND OPEN PIPE
FPC = FLORIDA POWER CORP.
FPP = FOUND PINCHED PIPE
FRM = FRAME
FZL = FLOOD ZONE LINE
GAR = GARAGE
G/E = GLASS ENCLOSURE
HWF = HOG WIRE FENCE
HWL = HIGH WATER LINE
INV = INVERT
LB = LAND SURVEYING BUSINESS
LFE = LOWEST FLOOR ELEV
LHSM = LOWEST HORIZONTAL SUPPORTING MEMBER
LS = LAND SURVEYOR
M = MEASURED
MAS = MASONRY
MES = MITERED END SECTION
MH = MANHOLE
MHW = MEAN HIGH WATER LINE
MSL = MEAN SEA LEVEL
NAIB = NAIL AND BOTTLE CAP
NAD = NAIL AND DISK
NAT = NAIL AND TAB
NGVD = NATIONAL GEODETIC VERTICAL DATUM
NO = NUMBER
O/A = OVERALL
OHW = OVERHEAD WIRE(S)
OR = OFFICIAL RECORDS
O/S = OFFSET
P = PLAT
PB = PLAT BOOK
PC = POINT OF CURVE
PCC = POINT OF COMPOUND CURVE
PCP = PERMANENT CONTROL POINT
PG = PAGE
PK = PARKER KALON
PL = PROPERTY LINE
POB = POINT OF BEGINNING
POC = POINT OF COMMENCEMENT
POG = POINT ON LINE
PP = POWER POLE
PRC = POINT OF REVERSE CURVATURE
PRM = PERMANENT REFERENCE MONUMENT
PROP = PROPERTY
PSM = PROFESSIONAL SURVEYOR & MAPPER
PT = POINT OF TANGENCY
PVMT = PAVEMENT
RAD = RADIUS
R = RECORD
REF = REFERENCE
RES = RESIDENCE
RL = RADIAL LINE
RLS = REGISTERED LAND SURVEYOR
RND = ROUND
RNG = RANGE
RRS = RAIL ROAD SPIKE
R/W = RIGHT-OF-WAY
SCM = SET CONCRETE MONUMENT
S/E = SCREENED ENCLOSURE
SEC = SECTION
SET NAIL = SET NAIL AND DISK RLS# 2912
SIR = SET 1/2" IRON ROD RLS# 2912
SQ = SQUARE
SRF = SPLIT RAIL FENCE
SR = STATE ROAD
STY = STORY
SUB = SUBDIVISION
S/W = SIDEWALK
TB = "T" BAR
TBM = TEMPORARY BENCH MARK
TC = TOP OF CURB
TOB = TOP OF BANK
TOS = TOE OF SLOPE
TRANS = TRANSFORMER
TWP = TOWNSHIP
TYP = TYPICAL
UG = UNDERGROUND
UTL = UTILITY
WD = WOOD
WF = WOOD FENCE
WIF = WROUGHT IRON FENCE
WIT = WITNESS
WWF = WIRE FENCE
WV = WATER VALVE

*** ABBREVIATIONS MAY ALSO BE CONCATENATED AS REQUIRED.
*** OTHER COMMONLY RECOGNIZED AND/OR ACCEPTED ABBREVIATIONS ARE ALSO UTILIZED BUT NOT SPECIFIED HEREON.

GENERAL NOTES

1. UNLESS OTHERWISE STATED, THE PROPERTY DESCRIPTION SHOWN HEREON WAS PROVIDED BY THE CLIENT, OR CLIENT'S DESIGNATED AGENT.
2. UNDERGROUND IMPROVEMENTS, INCLUDING BUT NOT LIMITED TO BUILDING FOUNDATIONS, HAVE NOT BEEN LOCATED EXCEPT AS SHOWN HEREON.
3. INACCESSIBLE ABOVE GROUND IMPROVEMENTS (E.G. BUILDING OVERHANGS, THOSE WITHIN SECURED AREAS, ETC.), HAVE NOT BEEN LOCATED EXCEPT AS SHOWN HEREON.
4. THIS SURVEY WAS PREPARED WITH THE BENEFIT OF FIDELITY NATIONAL TITLE INSURANCE COMPANY TITLE COMMITMENT, COMMITMENT ORDER NO. 4420832, DATED JUNE 11, 2013.
5. THERE ARE NO VISIBLE ENCROACHMENTS, EXCEPT AS SHOWN HEREON.
6. BECAUSE OF THE POSSIBILITY OF MOVEMENT OF THE MONUMENTATION FROM ITS ORIGINAL PLACEMENT BY PERSONS OTHER THAN THE SURVEYOR, IT IS RECOMMENDED THAT PRIOR TO ANY NEW IMPROVEMENTS ON THE PROPERTY THE POSITION OF THE MONUMENTATION BE VERIFIED.
7. UNAUTHORIZED COPIES AND/OR REPRODUCTIONS VIA ANY MEDIUM OF THIS DOCUMENT OR ANY PORTIONS THEREOF ARE EXPRESSLY PROHIBITED WITHOUT THE SIGNING SURVEYOR'S WRITTEN CONSENT.
8. MEASURED BEARINGS ARE IN REFERENCE TO FLORIDA STATE PLANE COORDINATE GRID NORTH, WEST ZONE, NORTH AMERICAN DATUM OF 1983 (1990 READJUSTMENT), AS ESTABLISHED BY THE NATIONAL GEODETIC SURVEY.
9. ALL BUILDING TIES, PROPERTY MARKER LOCATIONS AND OTHER SITE IMPROVEMENT LOCATIONS SHOWN HEREON ARE MEASURED PERPENDICULAR TO ADJACENT BOUNDARY LINES, UNLESS OTHERWISE STATED.
10. FLOOD ZONE DESIGNATION AND/OR FLOOD ZONE LINES (IF ANY) SHOWN HEREON HAVE BEEN SCALED FROM THE REFERENCED MAP AND ARE APPROXIMATE. THE TRUE FLOOD ZONE LINES MUST BE DETERMINED BY AN ENGINEER.
11. THIS SURVEY DOES NOT DETERMINE OR IMPLY OWNERSHIP.
12. THERE MAY BE ADDITIONAL RESTRICTIONS, EASEMENTS OR OTHER MATTERS OF RECORD THAT ARE NOT SHOWN HEREON THAT MAY BE FOUND IN THE PUBLIC RECORDS OF THIS COUNTY.
13. A DIG TICKET WAS SUBMITTED WITH SUNSHINE STATE ONE CALL OF FLORIDA ON JUNE 17, 2013, TICKET I.D. NUMBER 168306601. THE UNDERGROUND UTILITIES SHOWN HEREON, BASED ON ANY SUBSEQUENT FIELD MARKINGS OR DELINEATIONS PERFORMED BY THE AFFECTED UTILITY PROVIDERS, WERE LOCATED BY A FIELD SURVEY AND ONLY LOCATED AS SHOWN HEREON. ONLY THE UNDERGROUND UTILITIES WHICH WERE VISIBLE FROM GROUND LEVEL TO THE SURVEYOR ON THE ACTUAL DAY OF THE FIELD SURVEY WERE LOCATED AND ANY UNDERGROUND UTILITIES NOT FIELD MARKED OR DELINEATED ON THE GROUND ARE NOT SHOWN HEREON. NO EXCAVATIONS OR SUBSURFACE WORK EFFORTS OF ANY KIND WERE PERFORMED BY GEORGE A. SHIMP II & ASSOCIATES, INC. TO VERIFY THE EXISTENCE OF ANY UNDERGROUND UTILITIES. THE SURVEYOR MAKES NO GUARANTEE THAT THE UNDERGROUND UTILITIES SHOWN COMPRISE ALL SUCH UTILITIES IN THE AREA, EITHER IN SERVICE OR ABANDONED.
14. THE ZONING AND SETBACK INFORMATION SHOWN HEREON IS BASED ON INFORMATION AVAILABLE DURING THE PREPARATION OF THIS SURVEY AND MAY BE SUBJECT TO FLEXIBLE DEVELOPMENT STANDARDS AND OTHER REQUIREMENTS AND GUIDELINES. THIS INFORMATION SHOULD BE VERIFIED WITH THE GOVERNING AUTHORITY PRIOR TO ANY DETERMINATIONS OR DESIGN.
15. ELEVATIONS SHOWN HEREON ARE BASED ON THE NORTH AMERICAN VERTICAL DATUM OF 1988 (N.A.V.D. 1988) AS ESTABLISHED FROM N.G.S. BENCH MARK "R 668", WITH AN ELEVATION OF 40.89 FEET N.A.V.D. 1988 (TO CONVERT ELEVATIONS TO N.G.V.D. 1929, ADD 0.84 FEET).

ZONING and SETBACK NOTES

1.) ZONED: C1 (NEIGHBORHOOD COMMERCIAL)

2.) BUILDING SETBACKS:

FRONT: 25 FEET
SIDES: 0 FEET
REAR: 30 FEET

NOTE: THE ABOVE DATA WAS OBTAINED FROM THE SITE INVESTIGATION REPORT PERFORMED BY ADAMS ENGINEERING.

ALTA/ACSM LAND TITLE SURVEY (L/C # 9-2550) - SHEET 1 OF 3

REVISIONS			
DATE	REVISION MADE	JOB NUMBER	DRAWING FILE
2-25-2014	REVISED LEGAL DESCRIPTIONS	130158A	130158A.DWG
3-18-2014	ADDED UTILITIES AND REVISED PARCEL LINES	130158B	130158B.DWG

CERTIFICATION: I HEREBY CERTIFY TO THE BEST OF MY KNOWLEDGE AND BELIEF THAT THE SURVEY SHOWN HEREON SUBSTANTIALLY MEETS THE MINIMUM TECHNICAL STANDARDS FOR LAND SURVEYING DESCRIBED IN THE STATE OF FLORIDA RULE 5J-17, F.A.C. FURTHERMORE, THIS CERTIFICATION SHALL NOT EXTEND TO ANY OTHER PERSONS OR PARTIES OTHER THAN THOSE NAMED ON THIS SURVEY AND SHALL NOT BE VALID AND BINDING AGAINST THE UNDERSIGNED SURVEYOR WITHOUT THE ORIGINAL RAISED SEAL AND SIGNATURE OF THE FLORIDA LICENSED SURVEYOR AND MAPPER.

George A. Shimp III
GEORGE A. SHIMP III, PROFESSIONAL SURVEYOR & MAPPER No. 6137

JOB NUMBER: 130158	DATE SURVEYED: 6-26-2013
DRAWING FILE: 130158.DWG	DATE DRAWN: 7-3-2013
LAST REVISION: 3-18-2014	X REFERENCE: N/A

T.S. LB 1834
GEORGE A. SHIMP II AND ASSOCIATES, INCORPORATED
LAND SURVEYORS LAND PLANNERS
3301 DeSOTO BOULEVARD, SUITE D
PALM HARBOR, FLORIDA 34683
PHONE (727) 784-5496 FAX (727) 786-1256

© COPYRIGHT 2014
ALL RIGHTS RESERVED
George A. Shimp II & Associates, Inc.
Anyone copying this document in any manner without the expressed consent of GEORGE A. SHIMP II & ASSOCIATES, INC. shall be prosecuted to the full extent of the law.
DO NOT COPY OR REPRODUCE

© COPYRIGHT 2014
ALL RIGHTS RESERVED
George A. Shimp II & Associates, Inc.
Anyone copying this document in any manner without the expressed consent of GEORGE A. SHIMP II & ASSOCIATES, INC. shall be prosecuted to the full extent of the law.
DO NOT COPY OR REPRODUCE

McDonald's

STATE ROAD No. 54 & COUNTRY PLACE
SECTION 30, TOWNSHIP 26 SOUTH, RANGE 17 EAST
NEW PORT RICHEY, PASCO COUNTY, FLORIDA

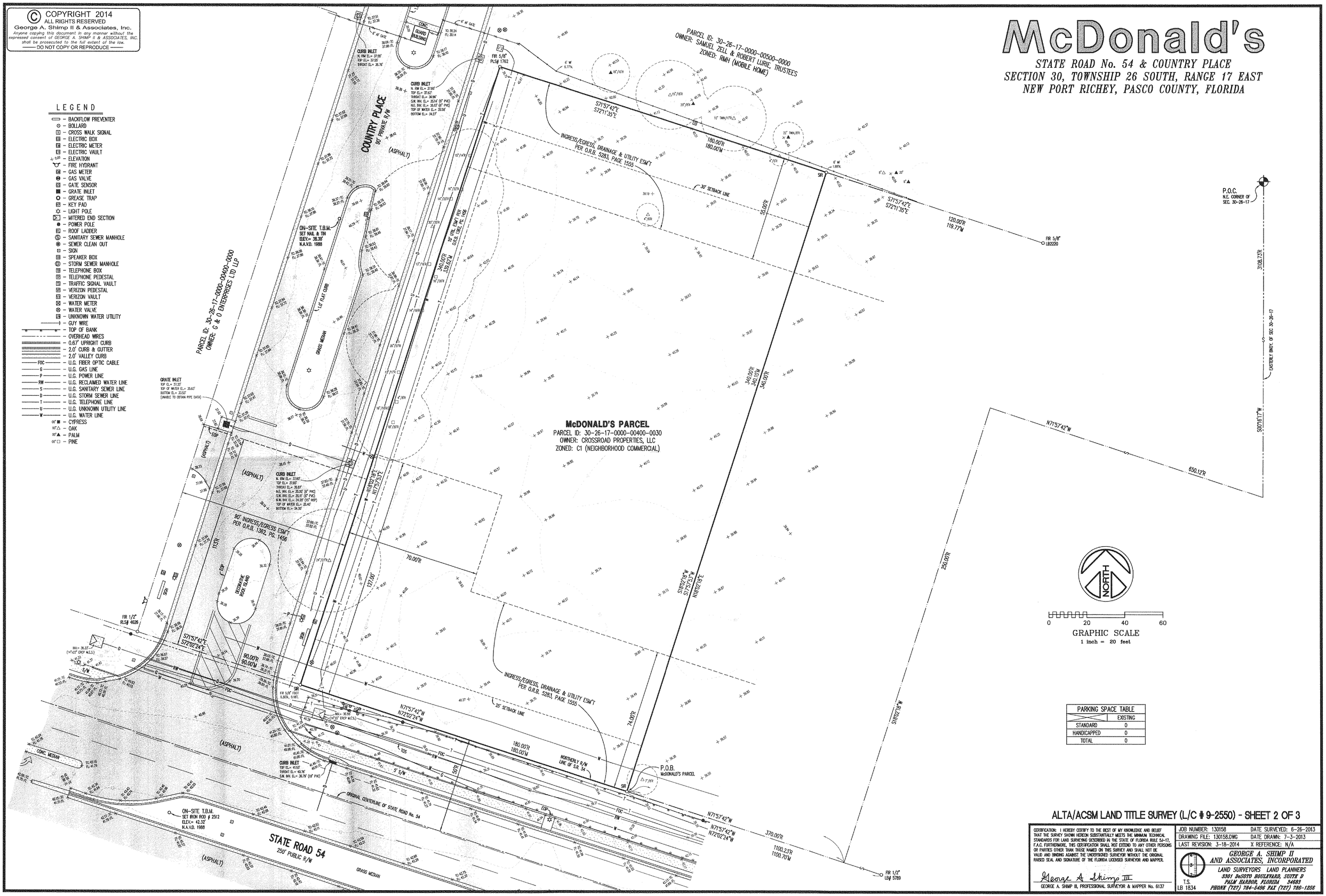

PARKING SPACE TABLE	
	EXISTING
STANDARD	0
HANDICAPPED	0
TOTAL	0

ALTA/ACSM LAND TITLE SURVEY (L/C # 9-2550) - SHEET 2 OF 3

CERTIFICATION: I HEREBY CERTIFY TO THE BEST OF MY KNOWLEDGE AND BELIEF THAT THE SURVEY SHOWN HEREON SUBSTANTIALLY MEETS THE MINIMUM TECHNICAL STANDARDS FOR LAND SURVEYING DESCRIBED IN THE STATE OF FLORIDA RULE 5J-17, F.A.C. FURTHERMORE, THIS CERTIFICATION SHALL NOT EXTEND TO ANY OTHER PERSONS OR PARTIES OTHER THAN THOSE NAMED ON THIS SURVEY AND SHALL NOT BE VALID AND BINDING AGAINST THE UNDERSIGNED SURVEYOR WITHOUT THE ORIGINAL RAISED SEAL AND SIGNATURE OF THE FLORIDA LICENSED SURVEYOR AND MAPPER.

George A. Shimp III
GEORGE A. SHIMP III, PROFESSIONAL SURVEYOR & MAPPER No. 6137

JOB NUMBER: 130158	DATE SURVEYED: 6-26-2013
DRAWING FILE: 130158.DWG	DATE DRAWN: 7-3-2013
LAST REVISION: 3-18-2014	X REFERENCE: N/A

GEORGE A. SHIMP II
AND ASSOCIATES, INCORPORATED
LAND SURVEYORS LAND PLANNERS
3901 DeSOTO BOULEVARD, SUITE D
PALM HARBOR, FLORIDA 34683
PHONE (727) 784-5496 FAX (727) 786-1258
T.S. LB 1834

McDonald's

STATE ROAD No. 54 & COUNTRY PLACE
SECTION 30, TOWNSHIP 26 SOUTH, RANGE 17 EAST
NEW PORT RICHEY, PASCO COUNTY, FLORIDA

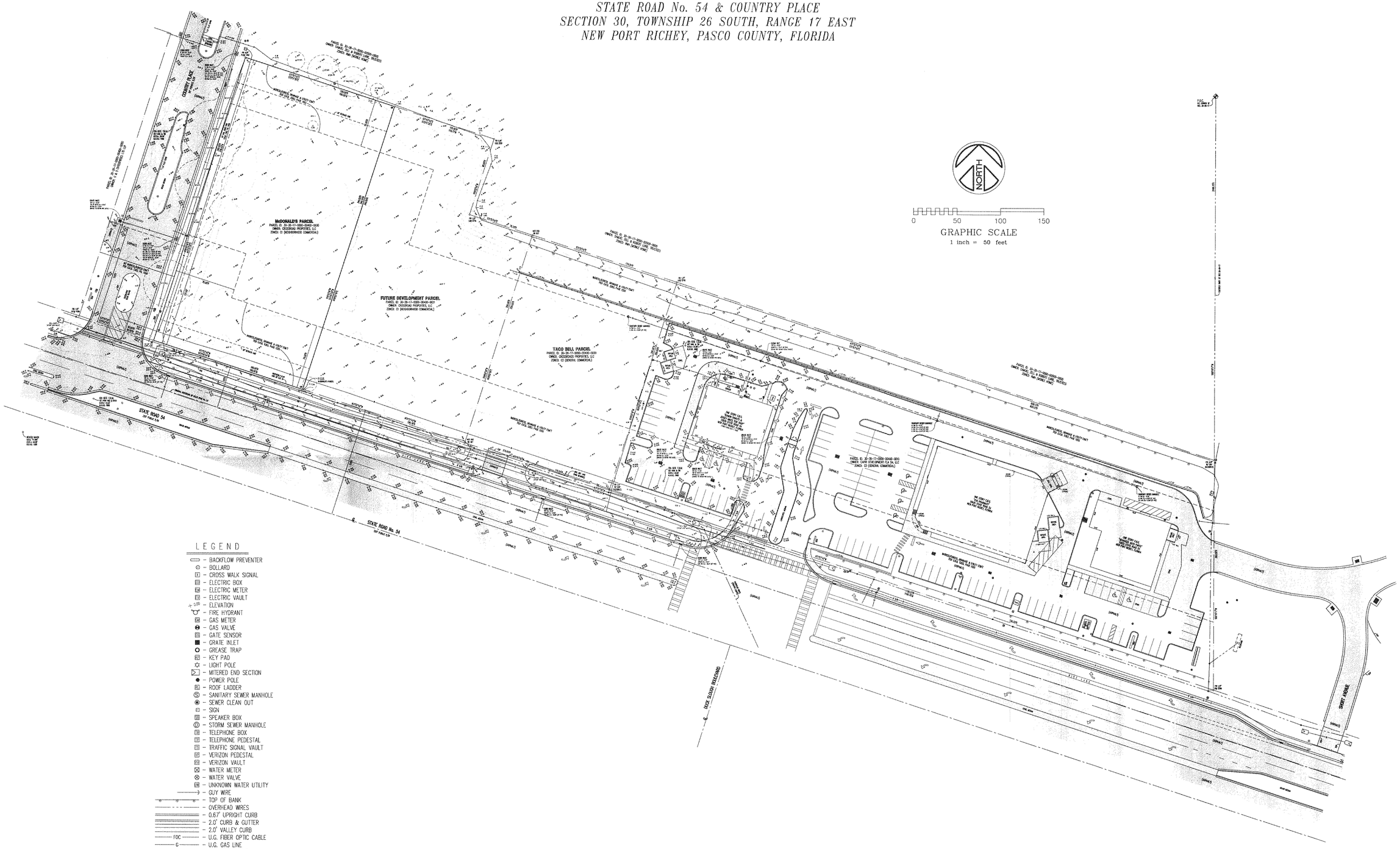

LEGEND

- BACKFLOW PREVENTER
- BOLLARD
- CROSS WALK SIGNAL
- ELECTRIC BOX
- ELECTRIC METER
- ELECTRIC VAULT
- ELEVATION
- FIRE HYDRANT
- GAS METER
- GAS VALVE
- GATE SENSOR
- GRATE INLET
- GREASE TRAP
- KEY PAD
- LIGHT POLE
- MITERED END SECTION
- POWER POLE
- ROOF LADDER
- SANITARY SEWER MANHOLE
- SEWER CLEAN OUT
- SIGN
- SPEAKER BOX
- STORM SEWER MANHOLE
- TELEPHONE BOX
- TELEPHONE PEDESTAL
- TRAFFIC SIGNAL VAULT
- VERIZON PEDESTAL
- VERIZON VAULT
- WATER METER
- WATER VALVE
- UNKNOWN WATER UTILITY
- GUY WIRE
- TOP OF BANK
- OVERHEAD WIRES
- 0.67' UPRIGHT CURB
- 2.0' CURB & GUTTER
- 2.0' VALLEY CURB
- FOC — U.G. FIBER OPTIC CABLE
- G — U.G. GAS LINE
- P — U.G. POWER LINE
- RW — U.G. RECLAIMED WATER LINE
- S — U.G. SANITARY SEWER LINE
- D — U.G. STORM SEWER LINE
- T — U.G. TELEPHONE LINE
- U — U.G. UNKNOWN UTILITY LINE
- W — U.G. WATER LINE
- 60" — CYPRESS
- 60" — OAK
- 60" — PALM
- 60" — PINE

© COPYRIGHT 2014
ALL RIGHTS RESERVED
George A. Shimp II & Associates, Inc.
Anyone copying this document in any manner without the expressed consent of GEORGE A. SHIMP II & ASSOCIATES, INC. shall be prosecuted to the full extent of the law.
DO NOT COPY OR REPRODUCE

ALTA/ACSM LAND TITLE SURVEY (L/C # 9-2550) - SHEET 3 OF 3

CERTIFICATION: I HEREBY CERTIFY TO THE BEST OF MY KNOWLEDGE AND BELIEF THAT THE SURVEY SHOWN HEREON SUBSTANTIALLY MEETS THE MINIMUM TECHNICAL STANDARDS FOR LAND SURVEYING DESCRIBED IN THE STATE OF FLORIDA RULE 5J-17, F.A.C. FURTHERMORE, THIS CERTIFICATION SHALL NOT EXTEND TO ANY OTHER PERSONS OR PARTIES OTHER THAN THOSE NAMED ON THIS SURVEY AND SHALL NOT BE VALID AND BINDING AGAINST THE UNDERSIGNED SURVEYOR WITHOUT THE ORIGINAL RAISED SEAL AND SIGNATURE OF THE FLORIDA LICENSED SURVEYOR AND MAPPER.

George A. Shimp III
GEORGE A. SHIMP III, PROFESSIONAL SURVEYOR & MAPPER No. 6137

JOB NUMBER: 130158	DATE SURVEYED: 6-26-2013
DRAWING FILE: 130158.DWG	DATE DRAWN: 7-3-2013
LAST REVISION: 3-18-2014	X REFERENCE: N/A

GEORGE A. SHIMP II AND ASSOCIATES, INCORPORATED
LAND SURVEYORS LAND PLANNERS
3301 DeSOTO BOULEVARD, SUITE D
PALM HARBOR, FLORIDA 34683
PHONE (727) 784-5496 FAX (727) 785-1256
T.S. LB 1834

GENERAL NOTES

1. All construction shall be in accordance with the governing municipality's and/or agencies' construction standards and specifications where applicable. In the event that the governing municipality's standard details do not apply, applicable State standard construction details and specifications shall govern.

2. The Contractor shall begin work as directed by the Owner/County or the Notice to Proceed.

3. The Contractor shall notify the Owner/County representative of off-site excess spoils sites that are to be utilized.

4. The Contractor is responsible for keeping existing driveways and sidewalks free of mud and debris from the construction at all times.

5. The Contractor shall maintain adequate site drainage during all phases of construction. The Contractor shall use silt fences (or other methods approved by the engineer and County) as required to prevent silt and construction debris from flowing onto adjacent properties. Contractor shall comply with all applicable federal, state, or local erosion, conservation, and siltation ordinances. Contractor shall remove all temporary erosion control devices upon completion of permanent drainage facilities and the establishment of a stand of grass or other growth to prevent erosion.

6. Disturbed areas that are seeded shall be checked periodically to see that grass coverage is properly maintained. All disturbed areas shall be watered, fertilized, and reseeded or resodded, as necessary.

7. All existing fences are to remain unless specified otherwise by the Owners representative. Any damage to fences shall be repaired at Contractor's expense with new and like materials. Temporary construction site security fences are required.

8. The Contractor is responsible for obtaining all necessary permits and approvals prior to and throughout construction.

9. It is the Contractor's responsibility to maintain neat and accurate construction records for the Owner/County's use. The Contractor shall provide the County clean and accurate full size reproducible Record Drawings which clearly describe all construction and any deviations from the plans.

10. Contractor shall not store materials, equipment or other construction items on adjacent properties or adjacent right-of-ways without the prior written consent of the property Owner and the County. All construction waste materials to be removed shall be disposed of at a permitted location off site, unless written approval is obtained from the County.

11. All excavation is unclassified and shall include all materials encountered to include but not be limited to rock, rubble, debris, trash, etc. Unusable excavated material and all waste resulting from site clearing and grubbing shall be disposed of off site at the Contractor's expense unless otherwise specified or agreed to by Owner.

12. The Contractor shall take all available precautions to control dust. Contractor shall control dust by sprinkling water, or by other means, approved by the County and Engineer.

13. Contractor shall be responsible for all required construction surveying, quality control, and materials testing.

14. All efforts shall be made to avoid damage to existing trees that are to remain. Trees shall be trimmed and painted only if necessary for the safe maneuvering of construction equipment. Contractor shall receive prior approval from the Owner's field representative for removal of any trees. When excavating around a tree, the roots shall be clean cut prior to any excavation work. Do not snag and tear tree roots.

15. All adjacent property damaged by the proposed construction shall be restored to equal or better condition than which it was found before such work was undertaken (non-pay item).

16. All shop drawings and submittals shall be proofread and reviewed by the General Contractor for approval prior to submittal to the Engineer. Subcontractor / General Contractor shall clearly indicate, mark, highlight, and properly clarify products to be considered for approval. Submittals not proofread or reviewed or clarified properly shall be returned unreviewed. Contractor shall resubmit shop drawings and allow for suitable review time. Suitable review time shall be ten (10) working for typical submittals and longer depending on the size and nature of the submittal.

DEMOLITION NOTES

1. No earth-disturbing activities shall commence until all permits are obtained and perimeter erosion control measures are in place.

2. All demolition shall be closely coordinated with the owner's representative regarding items to be salvaged, those to be removed, etc. including any and all tree preservation and transplanting activities, as outlined in the pre-construction meeting. Removal, relocation and/or disposal of any pre-existing on-site trash, debris, or stockpiles shall be included in the total cost of demolition and shall be coordinated with the owner's representative at all times.

3. The contractor shall create ample staging and stockpiling areas for the deliveries of construction materials, concrete deliveries, topsoil, etc. in accordance with the owner's representative and the project specifications.

4. The contractor shall incur all costs for maintenance and repair of the existing fences to remain, irrigation systems to remain, utility lines, etc, as outlined in the specifications.

5. Ingress and egress points, proposed disposal sites, and haul routes must be approved by local officials prior to removal of demolition debris off-site.

6. Contractor shall comply to the fullest extent with all regulations governing agencies regarding the demolition, removal, transportation and disposal of all demolition debris.

7. The contractor shall locate and remove all underground utility cables (electric, telephone, etc.) up to a depth of 24 inches below grade as part of the base bid.

8. The contractor shall locate and remove all underground utility piping, conduit, and cables, regardless of depth, in the area of the proposed building(s) foundations.

9. Contractor shall comply to the fullest extent with the latest OSHA standards for excavation and trenching procedures. Contractor shall use support systems, sloping, benching, etc. as necessary for these operations, and shall comply with all OSHA performance criteria.

10. The contractor shall assume responsibility for the protection of all property corner monuments, benchmarks, control points, etc, and shall have, at his expense, all corner monuments replaced which are disturbed by construction activities.

11. Notes shown hereon regarding specific items of demolition are general in nature, and are not intended to be wholly inclusive. The contractor shall demolish and remove all existing improvements to the satisfaction of the owner, as necessary for the construction of the proposed improvements, and to the extent as noted in the specifications.

12. The contractor shall be responsible for coordinating disconnection of all utilities serving the existing site with the appropriate utility company, and shall obtain approval from same to commence demolition activities.

13. The contractor shall be responsible for plugging, capping, or otherwise terminating utility service lines at existing meter locations, cleanouts, etc. a min. distance of 1 foot outside the limits of the tract shown.

PASCO COUNTY SITE PLAN NOTES

1. ALL UTILITY CONSTRUCTION SHALL COMPLY WITH PASCO COUNTY STANDARDS FOR DESIGN AND CONSTRUCTION OF WATER AND WASTEWATER FACILITIES SPECIFICATIONS, LATEST EDITION.
2. ALL ON-SITE WATER AND SEWER FACILITIES SHALL BE OWNED AND MAINTAINED BY THE OWNER-DEVELOPER.
3. INSTALLATION OF FUEL STORAGE TANKS REQUIRES REVIEW AND APPROVAL BY THE FIRE MARSHAL AND THE ISSUANCE OF A SEPARATE BUILDING PERMIT. APPROVAL OF THE SITE PLAN DOES NOT CONSTITUTE APPROVAL OF THE LOCATION OF THE FUEL TANKS.
4. ALL PROPOSED SIGNS MUST BE APPLIED FOR, APPROVED, AND PERMITTED ON AN INDIVIDUAL BASIS APART FROM ANY ULTIMATELY APPROVED SITE PLAN. APPROVAL OF THIS SITE PLAN DOES NOT CONSTITUTE APPROVAL OF ANY SIGNAGE.
5. HANDICAP PARKING SPACES WILL BE PROPERLY SIGNED AND STRIPED IN ACCORDANCE WITH FLORIDA STATUE 316, THE MANUAL ON UNIFORM TRAFFIC CONTROL DEVICES, OR OTHER APPLICABLE STANDARDS.
6. THE ARCHITECT/ENGINEER CERTIFIES THAT THE SITE HAS BEEN DESIGNED IN ACCORDANCE WITH THE AMERICANS WITH DISABILITIES ACT.
7. ALL ON-SITE PARKING SPACES WILL BE STRIPED AND SIGNED IN ACCORDANCE WITH THE MANUAL ON UNIFORM TRAFFIC DEVICES, LATEST EDITION. PARKING SPACES, DIRECTIONAL ARROWS, AND STOP BARS SHALL BE STRIPED IN WHITE. IT SHALL BE THE OWNER/DEVELOPER'S RESPONSIBILITY TO PROPERLY SIGN AND STRIPE IN ACCORDANCE WITH APPLICABLE STANDARDS.
8. THE OWNER/DEVELOPER ACKNOWLEDGES THAT THIS APPROVAL DOES NOT INCLUDE ANY WORK IN THE COUNTY RIGHT-OF-WAY. ALL RIGHT-OF-WAY WORK SHALL BE A FUNCTION OF AN APPROVED PASCO RIGHT-OF-WAY USE PERMIT.
9. ALL CLEAR-SITE AREAS SHALL BE KEPT FREE OF ANY SIGNAGE PLANTINGS, TREES, ETC. IN EXCESS OF THREE-AND-A-HALF (3-1/2) FEET IN HEIGHT.
10. NO IRRIGATION SYSTEM OR LANDSCAPING SHALL BE INSTALLED IN ANY COUNTY OR STATE RIGHT-OF-WAY WITHOUT ISSUANCE OF APPROPRIATE RIGHT-OF-WAY USE PERMIT.
11. THE OWNER/DEVELOPER ACKNOWLEDGES THAT THE SITE AND ITS SUBSEQUENT BUILDING PERMITS SHALL COMPLY WITH ALL REZONING/MPUD/PUD CONDITIONS.
12. ALL STRUCTURES, INCLUDING BUFFER WALLS, RETAINING WALLS, SIGNAGE, ETC. REQUIRE BUILDING PERMITS.
13. IN CONSIDERATION OF PASCO COUNTY'S AGREEMENT TO PROVIDE POTABLE WATER AND/OR RECLAIMED WATER TO THE SUBJECT PROPERTY, DEVELOPER/OWNER, AND IT'S SUCCESSORS AND ASSIGNS, AGREE TO THE FOLLOWING:
    A. IN THE EVENT OF PRODUCTION FAILURE OR SHORTFALL BY TAMPA BAY WATER, AS SET FORTH IN SECTION 3.19 OF THE INTERLOCAL AGREEMENT CREATING TAMPA BAY WATER, DEVELOPER/OWNER'S SHALL TRANSFER TO PASCO COUNTY AND ANY ALL WATER USE PERMITS OR WATER USE RIGHTS THE DEVELOPER/OWNER MAY HAVE TO USE OR CONSUME SURFACE OR GROUND WATER WITHIN PASCO COUNTY.
    B. PRIOR TO DEVELOPER/OWNER SELLING WATER OR WATER USE PERMITS OR WATER USE RIGHTS, DEVELOP/OWNER SHALL NOTIFY PASCO COUNTY, AND PASCO COUNTY SHALL HAVE A RIGHT OF FIRST REFUSAL TO PURCHASE SUCH WATER OR WATER USE PERMITS OR WATER USE RIGHTS.

SEQUENCING / TRAFFIC CONTROL NOTES

1. Contractor shall prepare, furnish, maintain, and remove all traffic control barricades, warning signs, lights, construction fences, etc. for the work throughout construction. All barricades, warning signs, lights, devices, etc., for the guidance and protection of traffic and pedestrians must conform to the installation shown in the MUTCD, as currently amended, by the Department of Transportation.

2. Contractor shall provide access to all required entrances and exits at all times throughout construction. Contractor shall provide a traffic control and sequencing plan to the County and owner prior to the start of construction. Coordinate the plan and schedule with owner's representatives.

UTILITY NOTES

1. The Contractor shall be responsible for locating all utilities, whether private or public, prior to mobilization. Contractor shall visit the site and make all necessary observations and inspections to familiarize themselves with the site and the site facilities. The information and data shown with respect to existing underground facilities at or contiguous to the site is approximate and based on information furnished by the Owners of such underground facilities or on physical appurtenances observed in the field. The Owner and engineer shall not be responsible for the accuracy or completeness of any such information or data; and, the Contractor, shall have full responsibility for reviewing and checking all such information and data, for locating all underground facilities, for coordination of the work with the Owners of such underground facilities during construction, for the safety and protection thereof, and repairing any damage thereto resulting from the work. The cost of all will be considered as having been included in the contract price.

2. The Contractor shall notify all affected utility companies or agencies in writing at least 1 week prior to beginning construction. The Contractor shall be responsible for and make arrangements for any and all temporary utilities, permits, and agreements.

3. The Contractor shall salvage all existing utilities (including signs, valves, fire hydrants, etc.) in accordance with agency requirements and provide to the governing agency.

4. The Contractor shall protect all existing power poles, signs, manholes, telephones risers, water valves, utilities, etc. during all construction phases. Contractor will be responsible to replace any damaged items and restore any services that have been disturbed. All manholes, clean-outs, water valves, fire hydrants and other appurtenances must be adjusted to final grade before the Owner will accept the work. The Contractor shall give the County and/or residents and businesses affected by any anticipated water or sewer service disruptions at least forty-eight (48) hours prior notice.

5. Contractor shall exercise caution and maintain adequate clear zone between the Contractor's equipment and any power lines.

6. Contractor shall comply to the fullest extent with the latest OSHA standards for excavation and trenching procedures. Contractor shall use support systems, sloping, benching, etc. as necessary for these operations, and shall comply with all OSHA performance criteria.

7. Contractor shall, in base bid provide all necessary fittings and appurtenances required to complete all connections, resolve utility conflicts and other incidental utility work shown on the plans or contained in the specifications or required by governing agencies to include, but not limited to temporary services: valves, boxes, meters, backflow preventors, fire department connections, etc. including the repair or replacement of any existing irrigation system. Contractor shall raise/lower or adjust all existing utility mains in conflict with proposed utilities as part of the base bid for all known or unknown lines.

8. All utilities within 5' of proposed building(s) shall adhere to the MEP's recommendations and or requirements. Contractor shall provide storm drain connections for all roof drain lines. Refer to MEP's plans and related technical specifications. Civil utilities (water, sanitary sewer & storm sewer) limits begin 5' outside the building. In the event of a conflict with the MEP's within this area, the MEP's requirements shall govern.

9. Testing of utility trench backfill compaction shall be at 25' intervals and each lift's backfill. Backfill shall be processed such that no dirt clods are in excess of 2" diameter. All sanitary sewer lines and storm sewer lines shall be TV tested at the completion of the project (in addition to minimum Code or other requirements) to check for damage caused by other trades, utility conflicts, trench settlement, etc. The cost of such shall be included in the contractors base price.

10. Lighting fixtures, bases, poles, conduit, and wiring are by the General Contractor.

11. Proposed utilities are shown in schematic only. Exact locations shall be determined to allow for propert fit and the most proper economical installation.

12. All water and sewer construction to be in accordance with the utility provider's construction standards and specification, and to all applicable codes.

13. Storm sewer shall be RCP with gasket joints per FDOT standards, unless approved by the engineer.

BROOKSVILLE MAINTENANCE FDOT NOTES:

ALL WORK PERFORMED IN THE DEPARTMENT'S RIGHT OF WAY SHALL BE DONE IN ACCORDANCE WITH THE MOST CURRENT EDITIONS OF:
- A. F.D.O.T. STANDARD SPECIFICATIONS FOR ROAD AND BRIDGE CONSTRUCTION.
- B. F.D.O.T. DESIGN STANDARDS FOR DESIGN, CONSTRUCTION, MAINTENANCE AND UTILITY OPERATIONS ON THE STATE HIGHWAY SYSTEM.
- C. F.D.O.T. ROADWAY PLANS PREPARATION MANUAL VOLUME I, CHAPTER 2 AND/OR 25.
- D. F.D.O.T. FLEXIBLE PAVEMENT DESIGN MANUAL FOR NEW CONSTRUCTION AND PAVEMENT REHABILITATION.

1. ALL AREAS IN THE FDOT RIGHT OF WAY DISTURBED DURING CONSTRUCTION SHALL BE RESTORED, COMPACTED, SODDED AND WATERED IN CONFORMANCE WITH THE FDOT STANDARD SPECIFICATIONS FOR ROAD AND BRIDGE CONSTRUCTION. SECTION 575 AND 981 AND DESIGN STANDARDS INDEX 105.

2. DAYTIME WORK ONLY. THE F.D.O.T. ENGINEER MUST APPROVE NIGHT WORK AND LANE CLOSURES AT LEAST 48 HOURS IN ADVANCE. THE APPLICANT MUST NOTIFY THE FLORIDA DEPARTMENT OF TRANSPORTATION LOCAL MAINTENANCE OFFICE 48 HOURS IN ADVANCE OF STARTING ANY PROPOSED WORK. CALL BROOKSVILLE MAINTENANCE, JOHN KILKENNY @ 352-797-5700.

3. ALL TRAFFIC STRIPES AND PAVEMENT MARKINGS ARE TO BE LEAD-FREE, NON-SOLVENT BASED THERMOPLASTIC. THE PERMITTEE SHALL FURNISH THE DEPARTMENT WITH THE MANUFACTURER'S CERTIFICATION THAT THE THERMOPLASTIC IS 'LEAD FREE'. REMOVAL OF EXISTING STRIPING SHALL BE DONE BY MILLING AND RESURFACING OF THE FRICTION/SURFACE COURSE TO OBLITERATE OBSOLETE PAVEMENT MARKINGS.

4. ALL PROPOSED TRAFFIC SIGNS AND PAVEMENT MARKINGS SHALL BE IN CONFORMANCE WITH AND CONSTRUCTED TO THE FDOT DESIGN STANDARDS INDEX SERIES 11000 AND 17000 SERIES. THE PROPERTY OWNER MUST MAINTAIN THE TRAFFIC SIGNS AND MARKINGS FOR THE DRIVEWAY.

5. THE FDOT REQUIRES DOCUMENTATION FOR SUCCESSFUL COMPLETION OF AN APPROVED WORK ZONE TRAFFIC CONTROL TRAINING COURSE FOR THE AGENCY, UTILITY OR CONTRACTOR EMPLOYEE(S) INSTALLING AND/OR MAINTAINING THE APPROVED MAINTENANCE OF TRAFFIC PLAN, DOCUMENTATION IS TO BE FURNISHED TO THE DEPARTMENT AT THE PRE-CONSTRUCTION MEETING OR BEFORE OCCUPYING STATE RIGHT-OF-WAY.

6. MAINTENANCE OF TRAFFIC PLAN FOR WORK ZONES SHALL BE IN CONFORMANCE WITH All APPLICABLE INDICES OF THE FDOT DESIGN STANDARDS INDEX 600 SERIES ACCORDING TO THE TYPE OF ROADWAY AND TYPE OF WORK BEING PERFORMED.

7. SILT FENCE FOR EROSION CONTROL IN CONFORMANCE WITH DESIGN STANDARDS INDEX (DSI) 102 IS REQUIRED FOR ALL AREAS OF CONSTRUCTION WITHIN FDOT R/W: PERPENDICULAR TO AND PARALLEL WITH THE STATE ROAD.

8. SIDEWALK SHALL BE CONSTRUCTED PER FDOT INDEX 304 AND 310. DETECTABLE WARNING STRIPS, A.K.A, TRUNCATED DOMES, FOR DISTRICT SEVEN CONSTRUCTION AND MAINTENANCE SHOULD BE EITHER INSET CERAMIC TILES OR THERMOPLASTIC DETECTABLE WARNING STRIPS. THESE WARNING SURFACES SHALL ONLY BE PROVIDED BY THE FOLLOWING VENDORS/MANUFACTURERS.
   - A. INLINE TRUNCATED DOME EZ TILE SUPPLIED BY PROFESSIONAL PAVEMENT PRODUCTS
   - B. TOPMARK SUPPLIED BY FLINT TRADING
   - C. VANGUARD TRUNCATED DOME SUPPLIED BY VANGUARD

9. **MAINTENANCE OF TRAFFIC PLAN MUST INCLUDE FDOT DESIGN STANDARDS INDEX 660 PEDESTRIAN CONTROL FOR CLOSURE OF SIDEWALKS.

PASCO COUNTY STANDARD FIRE PROTECTION NOTES:

- A. ALL PROJECTS MUST COMPLY WITH PASCO COUNTY FIRE HYDRANT ORDINANCE NO. 46-51.
- B. FIRE HYDRANTS SHALL BE INSTALLED AND IN SERVICE PRIOR TO THE ACCUMULATION OF COMBUSTIBLES.
- C. PER THE NATIONAL FIRE PROTECTION ASSOCIATION, NFPA-1, 16.4.3.1.3: WHERE UNDERGROUND WATER MAINS AND HYDRANTS ARE TO BE PROVIDED, THEY SHALL BE INSTALLED, COMPLETED, AND IN SERVICE PRIOR TO CONSTRUCTION WORK.
- D. PER NFPA-1, 18.3.4.1: CLEARANCES OF 7½ FEET IN FRONT OF AND TO THE SIDES OF THE FIRE HYDRANT WITH A 4-FOOT CLEARANCE TO THE REAR MUST BE MAINTAINED AT ALL TIMES.
- E. GATED ENTRIES REQUIRE A SIREN OPERATING SYSTEM OR A 3M OPTICOM SYSTEM FOR EMERGENCY ACCESS.

PAVING NOTES

1. The Contractor shall be responsible for the cost of all failing density tests. In addition, the Contractor shall provide the Owner five (5) passing site pavement cores for the Owners use in the Owner's testing for thickness. Core locations shall be designated by the Owner. Contractor shall patch core holes and finish with like and matching materials. Contractor shall be responsible for any additional testing costs should the above tests fail minimum criteria as established by the Department of Transportation (DOT). Any non-conforming paving shall be replaced or resolved in accordance with DOT specifications.

2. All earthwork and subgrade preparation shall be in accordance with the Geotechnical Investigation and those recommendations listed within the report. Refer to this report for all earthwork and related items. Refer to Structural for building prep. The report references agency/industry standards. In the event that there is a question or dispute between governing specifications, the most stringent shall apply such that the owner receives the most advantageous finished product.

3. Asphalt & base for site paving shall conform to the latest DOT specifications.

4. All reinforcing steel and dowel bars in pavement shall be supported and maintained at the correct clearances by the use of bar chairs or other approved support.

5. The Contractor is solely responsible for performing all construction layouts from the site layout control points and from the dimensions shown. The Contractor must notify the engineer of any discrepancies in advance and allow for the engineer's response before proceeding with the work.

6. Unless otherwise noted, all concrete pavement shall be minimum 4,000 PSI compressive strength (at 28 days) & reinforced with #3 bars at 24" O.C.E.W. Fire Lanes, parking stalls, and roadway stripping & markings shall conform to governing standards. Sidewalks within landscape areas shall be minimum 4" thick. All joints (expansion, isolation, contraction, & construction) for concrete paving and incidental cracks shall be sealed with self leveling polyurethane sealant and installed in accordance with the American Concrete Pavement Association (ACPA) recommendations. Contractor shall observe the architectural and structural jointing layouts. In the event of a discrepancy or conflict for site paving, the Contractor shall refer to ACPA publication IS061.01P and IS400.01P for the joint specifications and the layout of pavement joints (non-pay item).
   Joint Spacing shall be as follows:
   5 inch pavement thickness - 10' joint spacing
   6+ inch pavement thickness - 12' joint spacing
   In areas where pavement thicknesss varies, the shorter joint spacing shall govern.

7. It shall be the responsibility of the Contractor to supply the engineer with a concrete mix design at the pre-construction meeting for review and approval. The cost of this design shall be included in the unit price of pavement material. Fly Ash is not permitted as a substitute for cement.

8. Contractor shall adjust all utilities (existing and proposed) to final grade (non-pay item). All utilities and appurtenances shall be extended up to final grade. Utility clean-outs, valves, manholes, etc. located within paved areas shall be paved monolithic with no block-outs. In non-paved areas, said appurtenances shall have a 4" thick concrete pad extending 12" beyond said appurtenance (block out) poured at final grade for protection against damage from mowing and maintenance equipment. Contractor shall place irrigation and other sleeves prior to any paving, per the irrigation plan, or as directed by the Owner's representative with the curbs scored to identify the sleeve locations.

9. The Contractor shall use care during compaction activities so as not to adversely affect landscape areas. After compaction and prior to placing landscaping, the upper twelve inches (12") of all landscaped areas shall be aerated, tilled, or otherwise processed so as to promote healthy root growth for turf and other vegetation. The Contractor will be responsible for any repairs, undercutting, removal, disposal, and backfilling of these areas if stabilization is discovered (non-pay item).

10. All pavement within 5' of proposed building(s) shall adhere to the structural recommendations and or Architectural requirements. Refer to structural and architectural plans and related technical specifications. Civil pavement limits begin 5' outside the building. In the event of of a conflict with the Structural and/or Architectural within this area, the Structural/Architect requirements shall govern.

McDONALDS GENERAL NOTES

1. The Contractor shall coordinate with all utility companies to determine exact point of service connection at existing utility. Refer to the building electrical and plumbing drawings for utility service entrance locations, sizes, and circuiting.

2. General Contractor must provide exact "as built" information upon completion.

3. All elevations shown are in reference to the benchmark and must be verified by the General Contractor at groundbreaking.

4. Finish walk and curb elevations shall be 6" above finish pavement.

5. All landscape areas shall be rough graded to 6" below top of all walks and curbs. Finished grading, landscaping and sprinkler systems are by the Owner / Operator.

6. Lot lighting concrete footings to conform with the soils report recommendations for this particular site.

7. It is strongly recommended that no contractual agreements of any kind be signed prior to receiving and thoroughly reviewing all approvals from all of the regulatory authorities having jurisdiction over this project.

8. Due to the nature of the work, all dimensions shown shall be considered approximate. Contractor shall field verify all dimensions prior to beginning construction. Contractors pricing shall cover all costs associated with a complete and properly functioning installation including all related parts, appurtenance, permits, connectors, etc. Shop drawings shall be submitted to the Architect for approval prior to fabrication or installation of any item. Failure to adhere to this procedure shall place full responsibility for any errors directly upon the Contractor.

9. All materials and construction within easements and R.O.W. shall conform to all governing authorities' jurisdictional standard construction details and specifications.

10. Bases, anchor bolts, conduit, and wiring for all signs are by the General Contractor.

11. ¾" empty conduit to locations shown at the lot perimeter for lot lighting is by the general contractor. Lighting fixtures, bases, poles, conduit, and wiring are by the General Contractor.

12. Bases for flagpoles are by the General Contractor. Anchor bolts are by the flagpole supplier.

13. Proposed utilities are shown in schematic only. Exact locations shall be determined to allow for the most economical installation.

DEWATERING ACTIVITIES

The Contractor shall adhere to all local, state, and federal codes and associated guidelines when performing any work on this project. This project requires below grade excavations and groundwater may become an issue. Short-term dewatering may be required. The Contractor and subcontractors acknowledge the codes set forth by Florida Administrative Code (F.A.C.) 40D-20 for General Water Use Permits. The Contractor and subcontractors shall adhere to all applicable local, state, and federal water use codes. The Engineer does not control the Contractor's means and methods and shall not be liable for Contractor's actions.

Should the Contractor elect to perform minor short-term dewatering of the on-site utility trenches, the Contractor shall strictly adhere to F.A.C. 40D-20 and as such no dewatering fluid (water) shall be removed from the site. Adequate temporary storage tanks or other suitable structures shall be utilized on-site by the Contractor or subcontractor to ensure that absolutely no dewatering fluid is discharged from the site. The Contractor shall employ adequate means and methods to perform the work in accordance with all codes. The Contractor shall consider phasing of the work so as to manage excavations, earthwork, and impacts due to typical and seasonal weather conditions.

48 HOURS BEFORE YOU DIG
CALL SUNSHINE
811
IT'S THE LAW IN FLORIDA
sunshine state ONE CALL of florida

SURVEY INFORMATION	
PREPARED BY: GEORGE A. SHIMP II & ASSOC., INC 3301 DeSOTO BOULEVARD, SUITE D PALM HARBOR, FLORIDA 34683 (727) 784-5496 DATE: JULY 2013	LEGAL DESCRIPTION: A PORTION OF SECTION 30, TOWNSHIP 26 SOUTH, RANGE 17 EAST, PASCO COUNTY FLORIDA McDONALD'S PARCEL CONTAINS 61,200 SQUARE FEET OR 1.40 ACRES, MORE OR LESS

PLAN SCALE: ----

ADDITION: McDONALD'S RESTAURANT

STREET ADDRESS: STATE ROAD 54 & COUNTRY PLACE

CITY	STATE
NEW PORT RICHEY	FLORIDA

COUNTY:	SURVEY:	ABSTRACT NO.
PASCO	----	----

L/C NUMBER:	CORPORATE DWG. NAME
009/2550	GENERAL NOTES

REV	DATE	DESCRIPTION	BY	ISSUE REF
---	---	---	---	---
---	---	---	---	---
---	---	---	---	---
---	---	---	---	---

Adams
27524 Cashford Circle, Ste. 101 ■ Wesley Chapel, Florida 33544 ■ (813) 929-7499
FLORIDA COA# 27614

TIM D. HODES — LICENSE No 67017 — STATE OF FLORIDA — PROFESSIONAL ENGINEER
3-24-14

OFFICE: FLORIDA REGION
ADDRESS: 10150 HIGHLAND MANOR DRIVE, SUITE 470; TAMPA, FLORIDA 33610

McDONALD'S®

THESE PLANS AND SPECIFICATIONS ARE THE PROPERTY OF McDONALD'S CORPORATION AND SHALL NOT BE REPRODUCED WITHOUT THEIR WRITTEN PERMISSION.

STATE ROAD 54 & COUNTRY PLACE
NEW PORT RICHEY, FLORIDA 34655

MCDONALD'S L/C: 009/2550
ADAMS ENGINEERING No. 2013.049

PLAN APPROVALS

SIGNATURE (2 REQUIRED)	DATE
REGIONAL MGR.	
CONST. MGR.	
OPERATIONS DEPT.	
REAL ESTATE DEPT.	

CO-SIGN SIGNATURES

CONTRACTOR	
OWNER	

STATUS	DATE	BY
DATE DRAWN	02/2014	EAO
PLAN CHECKED	02/2014	TDH
AS-BUILT		

C2.3

FULL PATH: I:_Projects\2013\2013.049_McD Trinity - Duck Slough\Drawings\C2.3 GENERAL NOTES
PLOTTER: Adobe PDF
PLOT TIME: 10:45:55 AM
PLOT DATE: Tuesday, March 18, 2014
PLOTTED BY: Edgar Ortiz
FILENAME: C2.3 GENERAL NOTES.dwg

SWPPP MAINTENANCE NOTES

ALL MEASURES STATED ON THIS EROSION AND SEDIMENT CONTROL PLAN, AND IN THE STORM WATER POLLUTION PREVENTION PLAN, SHALL BE MAINTAINED IN FULLY FUNCTIONAL CONDITION UNTIL NO LONGER REQUIRED FOR A COMPLETED PHASE OF WORK OR FINAL STABILIZATION OF THE SITE. ALL EROSION AND SEDIMENTATION CONTROL MEASURES SHALL BE CHECKED BY A QUALIFIED PERSON ON A SCHEDULE WHICH COMPLIES WITH THE GENERAL PERMIT REQUIREMENTS AND CLEANED AND REPAIRED WITHIN 48 HOURS OF THE INSPECTION IN ACCORDANCE WITH THE FOLLOWING:

1. INLET PROTECTION DEVICES AND BARRIERS SHALL BE REPAIRED OR REPLACED IF THEY SHOW SIGNS OF UNDERMINING, OR DETERIORATION.

2. ALL SEEDED AREAS SHALL BE CHECKED REGULARLY TO SEE THAT A GOOD STAND IS MAINTAINED. AREAS SHOULD BE FERTILIZED, WATERED AND RESEEDED AS NEEDED.

3. SILT FENCES SHALL BE REPAIRED TO THEIR ORIGINAL CONDITIONS IF DAMAGED. SEDIMENT SHALL BE REMOVED FROM THE SILT FENCES WHEN IT REACHES ONE-HALF THE HEIGHT OF THE SILT FENCE.

4. THE TEMPORARY PARKING AND STORAGE AREA (IF PRESENT) SHALL BE KEPT IN GOOD CONDITION (SUITABLE FOR PARKING AND STORAGE). THIS MAY REQUIRE PERIODIC TOP DRESSING OF THE TEMPORARY PARKING AS CONDITIONS DEMAND.

5. OUTLET STRUCTURES IN THE SEDIMENTATION BASINS OR SEDIMENT TRAPS (IF PRESENT) SHALL BE MAINTAINED IN OPERATIONAL CONDITION AT ALL TIMES. SEDIMENT SHALL BE REMOVED FROM SEDIMENT BASINS OR TRAPS WHEN THE DESIGN CAPACITY HAS BEEN REDUCED BY 50%.

6. MAINTENANCE PROCEDURES FOR THE EROSION AND SEDIMENTATION CONTROL SYSTEMS SPECIFIED ARE GIVEN IN SECTION 5 OF THE STORM WATER POLLUTION PREVENTION PLAN.

SWPPP NOTE

THE FLORIDA GENERIC PERMIT FOR CONSTRUCTION ACTIVITIES REQUIRES THAT THE PERMITTEE REVISE OR UPDATE THIS SWPPP WHENEVER THERE IS A CHANGE IN DESIGN, CONSTRUCTION, OPERATION, OR MAINTENANCE, OR WHENEVER THE RESULT OF AN INSPECTION INDICATES THAT THIS SWPPP IS INEFFECTIVE IN ELIMINATING OR SIGNIFICANTLY MINIMIZING POLLUTANTS IN STORM WATER DISCHARGES. HOWEVER, THE REGULATIONS OF THE FLORIDA BOARD OF PROCESSIONAL ENGINEERS REQUIRE THAT CHANGES MADE BY THE CONTRACTOR DURING CONSTRUCTION MUST BE AUTHORIZED BY A LICENSED FLORIDA ENGINEER. THESE CHANGES MAY BE AUTHORIZED BY THE ENGINEER OF RECORD THROUGH UPDATED DRAWINGS, WORK ORDER CHANGES, OR OTHER METHODS ACCEPTABLE TO THE ENGINEER; OR BY ANOTHER ENGINEER PROVIDED THAT THEY NOTIFY THE ENGINEER OF RECORD

*** CAUTION: NOTICE TO CONTRACTOR ***

THE CONTRACTOR SHALL NOTE ON SITE PLAN THE LOCATION OF ALL MATERIAL STORAGE AREAS, EQUIPMENT STORAGE AREAS, PETROLEUM TANKS, SOLID WASTE RECEPTACLES, SANITARY FACILITIES, ANY ON-SITE OR OFF-SITE BORROW OR STOCKPILE AREA, ANY ON-SITE OR OFF-SITE SUPPORT ACTIVITIES (SUCH AS ASPHALT OR CONCRETE PLANTS). CONTRACTOR SHALL ALSO PREPARE, KEEP ON SITE, AND MAINTAIN CURRENT A LIST OF MATERIALS WITH APPROXIMATE QUANTITIES, WHICH ARE STORED ON SITE.

*** CAUTION: NOTICE TO CONTRACTOR ***

THE CONTRACTOR IS SPECIFICALLY CAUTIONED THAT THE LOCATION AND/OR ELEVATION OF EXISTING UTILITIES AS SHOWN ON THESE PLANS IS BASED UPON RECORD OF THE VARIOUS UTILITY COMPANIES AND, WHERE POSSIBLE, ACTUAL MEASUREMENTS TAKEN IN THE FIELD. THE INFORMATION PROVIDED HEREON IS NOT TO BE TAKEN AS EXACT OR FULLY COMPLETE. THE CONTRACTOR MUST CALL THE APPROPRIATE UTILITY COMPANY AT LEAST 48 HOURS BEFORE ANY EXCAVATION TO REQUEST EXACT FIELD LOCATION OF ALL EXISTING UTILITIES. IT SHALL BE THE RESPONSIBILITY OF THE CONTRACTOR TO RELOCATE ALL EXISTING UTILITIES WHICH CONFLICT WITH THE PROPOSED IMPROVEMENTS AS SHOWN.

LEGEND

Symbol	Description
(stippled box)	PROPOSED OPEN SPACE/ LANDSCAPED AREAS (REFER TO LANDSCAPE PLAN)
VTC	PROPOSED CONSTRUCTION ENTRANCE VEHICLE TRACKING CONTROL (RE: EROSION CONTROL DETAILS SHEET)
(arrow)	EXISTING DRAINAGE FLOW ARROW
(arrow)	PROPOSED DRAINAGE FLOW ARROW
— SF —	SEDIMENT FENCE (PROPOSED) (RE: EROSION CONTROL DETAILS SHEET)
— LD —	LIMITS OF DISTURBANCE
— 40 —	EXISTING CONTOUR
— 40 —	PROPOSED CONTOUR
IP	PROPOSED INLET PROTECTION (RE: EROSION CONTROL DETAILS SHEET)
SBB	PROPOSED STRAW BALE BARRIER (RE: EROSION CONTROL DETAILS SHEET)
RCD	PROPOSED ROCK CHECK DAM (RE: EROSION CONTROL DETAILS SHEET)

EROSION CONTROL SEQUENCE

1. INSTALL SILT FENCES AROUND PERIMETER OF PROPERTY AND DISTURBED AREAS AS SHOWN.
2. INSTALL INLET PROTECTION FOR ALL EXISTING GRATE INLETS, CURB INLETS AND AT THE ENDS OF ALL EXPOSED STORM SEWER PIPES, IF PRESENT.
3. CONSTRUCT TEMPORARY CONSTRUCTION EXIT.
4. COMMENCE DEMOLITION, GRUBBING, AND REMOVAL OF VEGETATION IN AREA TO RECEIVE CUT OR FILL.
5. COMMENCE GRADING OPERATION FOR BUILDING PAD PREPARATION (SEE GRADING PLAN).
6. INSTALL ALL UNDERGROUND UTILITIES.
7. FINALIZE PAVEMENT SUBGRADE PREPARATION.
8. INSTALL ALL PROPOSED STORM SEWER PIPES AND INSTALL INLET PROTECTION SILT FENCES AT ENDS OF EXPOSED PIPES.
9. CONSTRUCT ALL GRATE INLETS AND DRAINAGE STRUCTURES. INLET PROTECTION SILT FENCES MAY BE REMOVED TEMPORARILY FOR THIS CONSTRUCTION.
10. REMOVE SILT FENCES AROUND INLETS AND MANHOLES NO MORE THAN 48 HOURS PRIOR TO PLACING STABILIZED BASE COURSE.
11. INSTALL BASE MATERIAL AS REQUIRED FOR PAVEMENT, CURB & GUTTER.
12. INSTALL ALL PAVING, CURB & GUTTER.
13. REMOVE TEMPORARY CONSTRUCTION EXIT & SILT FENCES.
14. COMPLETE PLANTING AND/OR SEEDING OF VEGETATED AREAS TO ACCOMPLISH STABILIZATION, IN ACCORDANCE WITH THE LANDSCAPING PLAN.

48 HOURS BEFORE YOU DIG
CALL SUNSHINE
811
IT'S THE LAW IN FLORIDA

sunshine state ONE CALL of florida

ACREAGE SUMMARY TABLE

Total Site	1.40 Ac. (61,200 SF)
Total Disturbed	3.24 Ac. (141,188 SF)
Pre-Construction Runoff Coefficient (Cw)	0.20
Post-Construction Runoff Coefficient (Cw)	0.90
McDonald's Post Area (Impervious)	0.88 Ac. (38,425 SF)
McDonald's Post Area (Pervious)	0.52 Ac. (22,775 SF)

OWNER'S CERTIFICATION

PER SECTION 2.8.1.C OF THE BASIS OF REVIEW, THE OWNER/PERMITTEE SHALL ENSURE THAT THE SURFACE WATER AND STORMWATER MANAGEMENT MEASURES PROPOSED IN THE PLAN ARE EFFECTIVELY IMPLEMENTED UNTIL COMPLETION OF THE PROJECT OR UNTIL THE PERMANENT SURFACE WATER MANAGEMENT SYSTEM IS OPERATIONAL.

CROSSROAD PROPERTIES, LLC
A FLORIDA LIMITED LIABILITY COMPANY

BY: ______________________
TIM D. HODES, AUTHORIZED AGENT FOR RICHARD D. CROSSLAND - MANAGER

DATE ______________________

NOTE
AREAS TO BE PERMANENTLY STABILIZED WITH VEGETATION AND SEEDING SPECIFICATIONS ARE SHOWN ON LANDSCAPE PLAN.

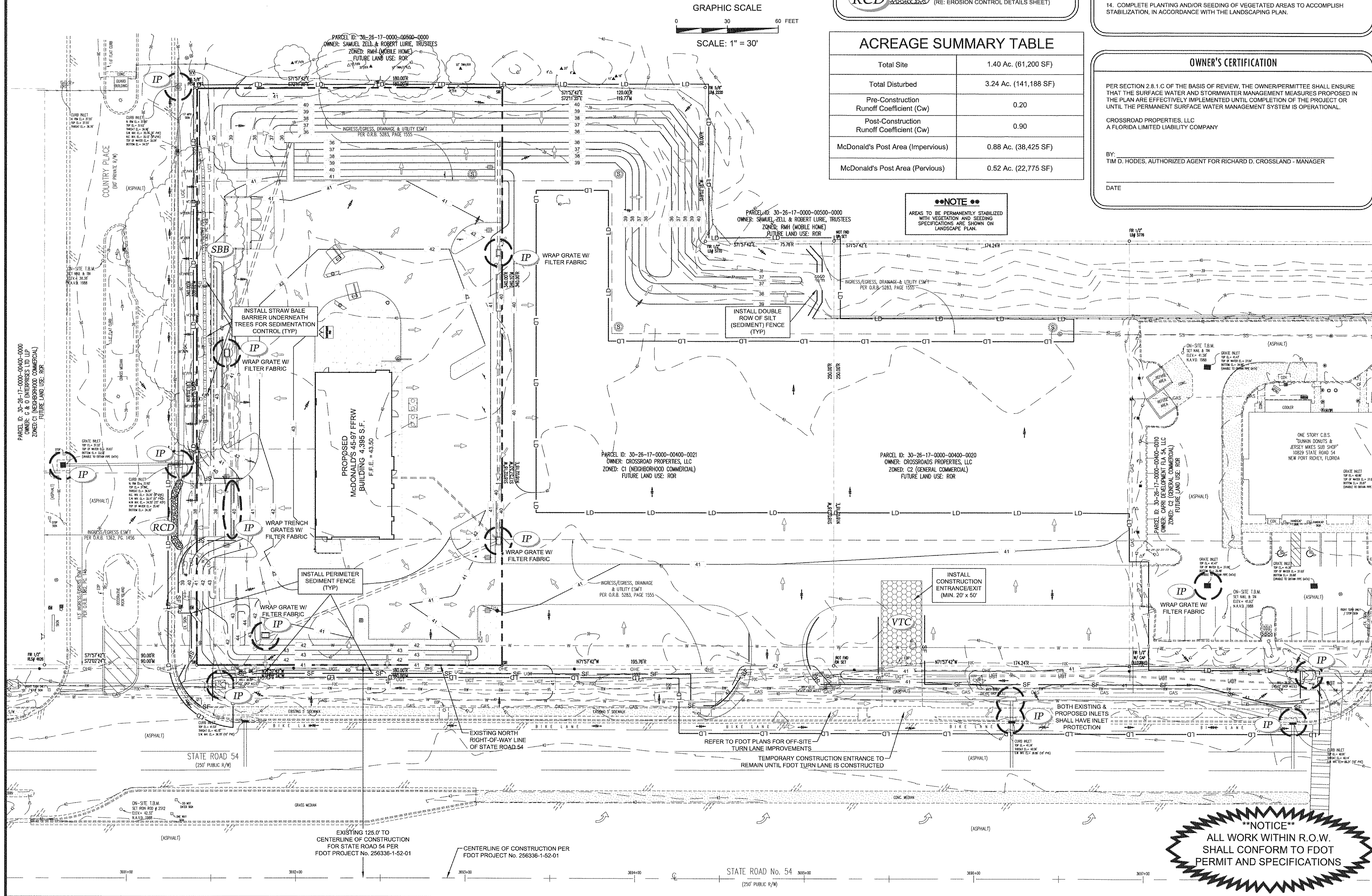

NOTICE
ALL WORK WITHIN R.O.W. SHALL CONFORM TO FDOT PERMIT AND SPECIFICATIONS

EROSION CONTROL NOTES

1. CONTRACTOR MUST REQUEST COVERAGE UNDER THE FLORIDA GENERIC PERMIT FOR CONSTRUCTION ACTIVITIES. IN ORDER TO USE THE GENERIC PERMIT, FOR SITE WHICH DISTURB 1 OR MORE ACRES, A NOTICE OF INTENT (NOI) FORM MUST BE COMPLETED AND MAILED TO THE FLORIDA DEPARTMENT OF ENVIRONMENTAL PROTECTION (AT LEAST 48 HOURS PRIOR TO ANY EARTH DISTRUBING ACTIVITIES). THE GENERAL CONTRACTOR, (AND ALL SUBCONTRACTORS INVOLVED WITH ANY CONSTRUCTION ACTIVITY RELATED TO EARTHWORK, EROSION CONTROL., ETC., OR WHICH UTILIZE POSSIBLE POLLUTANTS AS DEFINED IN THE NPDES GENERIC PERMIT) MUST BE FAMILIAR WITH THE CONTENTS OF THE STORM WATER POLLUTION PREVENTION PLAN (SWPPP) AS WELL AS ALL THE REQUIREMENTS SET FORTH IN THE NPDES GENERIC PERMIT AND ANY APPLICABLE LOCAL PERMIT REQUIREMENTS. AND SHALL COMPLY WITH ALL SUCH REQUIREMENTS DURING ALL CONSTRUCTION ACTIVITIES.

2. THE CONTRACTOR SHALL ADHERE TO THE SEQUENCE OF OPERATIONS FOR EROSION CONTROL IMPLEMENTATION SHOWN HEREON. ANY DEVIATION FROM THIS SEQUENCE DEEMED NECESSARY BY THE CONTRACTOR MAY REQUIRE THAT THE STORMWATER POLLUTION PREVENTION PLAN BE MODIFIED IN ACCORDANCE WITH THE NPDES GENERIC PERMIT GUIDELINES AND SECTION 1.01 F OF THE STORM WATER POLLUTION PREVENTION PLAN.

3. THE CONTRACTOR SHALL MODIFY THIS PLAN TO SHOW LOCATIONS OF TEMPORARY WASHDOWN AREAS, PORTABLE TOILETS, EQUIPMENT MAINTENANCE/REPAIR AREAS, STOCKPILE AREAS, FUEL STORAGE AREAS, AND POLLUTANT CONTROLS FOR EACH, AS SOON AS POSSIBLE.

4. THE GENERIC CONTRACTOR SHALL PERFORM ALL REQUIRED INSPECTIONS OF STORMWATER CONTROLS AND PRACTICES AT FREQUENCIES GIVEN IN THE NPDES GENERIC PERMIT, AND SHALL COMPLETE AND SIGN APPROPRIATE INSPECTION FORMS (AS PROVIDED IN THE STORMWATER POLLUTION PREVENTION PLAN).

5. OIL AND GREASE ABSORBING MATERIALS SHALL BE READILY AVAILABLE ON-SITE AND SHALL BE PROMPTLY USED TO CONTAIN AND/OR CLEAN UP ALL FUEL OR CHEMICAL SPILLS OR LEAKS.

6. DUST CONTROL SHALL BE ACCOMPLISHED BY WATERING DRY, EXPOSED AREAS ON A REGULAR BASIS. SPRAYING OF PETROLEUM BASED OR TOXIC LIQUIDS FOR THIS PURPOSE IS PROHIBITED.

7. DISTURBED AREAS OF THE SITE WHERE CONSTRUCTION ACTIVITIES HAVE CEASED FOR AT LEAST FOURTEEN DAYS SHALL BE TEMPORARILY STABILIZED WITH VEGETATION AND MULCH.

8. DISTURBED AREAS OF THE SITE WHERE CONSTRUCTION ACTIVITIES HAVE PERMANENTLY CEASED SHALL BE PERMANENTLY SEEDED WITHIN FOURTEEN DAYS PER LANDSCAPING SPECIFICATIONS.

9. ALL VEHICLES SHALL BE CLEANED AT THE CONSTRUCTION EXIT POINTS ACCORDING TO NOTES SHOWN ON THE DETAIL THEREOF. IF THE MAJORITY OF MUD OR DIRT IS NOT REMOVED FROM EXITING TRAFFIC, HOSE BIBS SHALL BE PROVIDED AT CONSTRUCTION TRAFFIC EXIT POINTS, AND VEHICLE TIRES SHALL BE WASHED BEFORE EXITING ONTO PUBLIC ROADS. SILT FROM THIS WASHING OPERATION SHALL BE INTERCEPTED AND TRAPPED BEFORE WASHWATER IS ALLOWED TO BE DISCHARGED OFF-SITE.

10. ALL MATERIALS SPILLED, DROPPED, WASHED OR TRACKED ONTO ADJACENT ROADWAYS BY VEHICLES EXITING THE SITE SHALL BE CLEANED OR REMOVED IMMEDIATELY.

11. CONTRACTOR SHALL PREVENT ANY SILTATION FROM ENTERING THE STORM SEWER SYSTEM. ALL INLETS AND INLET OPENINGS SHALL BE FULLY ENCIRCLED WITH APPROPRIATE INLET PROTECTION DEVICES.

12. THE CONTRACTOR SHALL REMOVE ALL ACCUMULATED SILT IN ANY TEMPORARY OR PERMANENT DETENTION PONDS, STORM SEWER INLETS AND PIPES, AND ALONG SILT FENCES, WITHIN 48 HOURS AFTER INSPECTION OF DEVICES REVEALS THE PRESENCE OF EXCESSIVE SILTATION (AS SPECIFIED IN SECTION 5.02 OF THE STORM WATER POLLUTION PREVENTION PLAN).

13. SILT FENCES SHALL BE PLACED AROUND ANY STOCKPILES USED ON THIS SITE.

14. THE CONTRACTOR IS ADVISED TO CONSTRUCT TEMPORARY OR PERMANENT FENCING AROUND DETENTION PONDS AND SEDIMENT BASINS AT THE EARLIEST POSSIBLE TIME TO PREVENT ACCIDENTAL ACCESS BY PERSONS OR ANIMALS.

15. ANY ADDITIONAL EROSION CONTROL MEASURES REQUIRED TO ENSURE COMPLIANCE WITH THE NPDES GENERIC PERMIT OR LOCAL PERMIT REQUIREMENTS SHALL BE IMPLEMENTED BY THE CONTRACTOR, AT NO ADDITIONAL EXPENSE TO THE OWNER.

16. ALL TEMPORARY EROSION CONTROL MEASURES SHALL BE REMOVED AND PROPERLY DISPOSED OF OFF-SITE WITHIN THIRTY DAYS AFTER STABILIZATION OF ALL SURFACES.

17. THE CONTRACTOR SHALL ASSUME LIABILITY FOR DAMAGE TO ADJACENT PROPERTIES AND/OR PUBLIC RIGHT-OF-WAY RESULTING FROM FAILURE TO FULLY IMPLEMENT AND EXECUTE ALL EROSION CONTROL PROCEDURES SHOWN AND NOTED IN THESE PLANS.

18. WHENEVER DIRT, ROCK, OR OTHER MATERIALS ARE EXPORTED FOR USE OFF OF THE PRIMARY CONSTRUCTION SITE, CONTRACTOR SHALL ASSUME RESPONSIBILITY FOR COMPLIANCE WITH ALL FDEP STORMWATER REQUIREMENTS FOR THE REMOTE SITE. CONTRACTOR SHALL FURNISH THE ENGINEER AND THE OWNER'S CONSTRUCTION MANAGER WITH DOCUMENTATION OF COVERAGE FOR THE BORROW OR FILL SITE UNDER A NPDES PERMIT FOR STORMWATER DISCHARGES AND OF A WRITTEN AGREEMENT WITH THE LANDOWNER OF THE REMOTE SITE INDICATING EROSION CONTROL MEASURES HAVE BEEN IMPLEMENTED THEREON. AT A MINIMUM, EROSION CONTROL MEASURES MUST CONSIST OF PERIMETER CONTROLS (SILT FENCES) ON ALL DOWN SLOPES AND SIDE SLOPE BOUNDARIES OF ANY DISTURBED AREA, PLUS PROVISIONS FOR RE-VEGETATION AFTER THE FILL MATERIALS ARE IN PLACE.

19. ALL SLOPES ON SITE WHICH ARE 3:1 OR STEEPER SHALL BE STABILIZED BY TRACK WALKING (TRAVERSING UP AND DOWN THE SLOPE WITH A TRACKED VEHICLE) FOLLOWED BY INSTALLATION OF EROSION CONTROL BLANKET INSTALLED IN ACCORDANCE WITH MANUFACTURER'S INSTRUCTIONS. EROSION CONTROL BLANKET SHALL BE NORTH AMERICAN GREEN S150 OR APPROVED EQUAL.

SURVEY INFORMATION

PREPARED BY:
GEORGE A. SHIMP II & ASSOC., INC
3301 DeSOTO BOULEVARD, SUITE D
PALM HARBOR, FLORIDA 34683
(727) 784-5496
DATE: JULY 2013

LEGAL DESCRIPTION:
A PORTION OF SECTION 30, TOWNSHIP 26 SOUTH, RANGE 17 EAST, PASCO COUNTY FLORIDA
McDONALD'S PARCEL CONTAINS 61,200 SQUARE FEET OR 1.40 ACRES, MORE OR LESS

PLAN SCALE: REFER TO GRAPHIC SCALE

ADDITION
McDONALD'S RESTAURANT

STREET ADDRESS
STATE ROAD 54 & COUNTRY PLACE

CITY	STATE
NEW PORT RICHEY	FLORIDA

COUNTY:	SURVEY:	ABSTRACT NO.
PASCO	----	----

L/C NUMBER:	CORPORATE DWG. NAME
009/2550	EROSION CONTROL PLAN

REV	DATE	DESCRIPTION	BY	ISSUE REF
---	---	---	---	---
---	---	---	---	---
---	---	---	---	---
---	---	---	---	---

Adams
27524 Cashford Circle, Ste. 101 ■ Wesley Chapel, Florida 33544 ■ (813) 929-7499
FLORIDA COA# 27614

TIM D. HODES LICENSE No 67017 STATE OF FLORIDA PROFESSIONAL ENGINEER 3-24-14

OFFICE: FLORIDA REGION
ADDRESS: 10150 HIGHLAND MANOR DRIVE, SUITE 470; TAMPA, FLORIDA 33610

McDONALD'S®

THESE PLANS AND SPECIFICATIONS ARE THE PROPERTY OF McDONALD'S CORPORATION AND SHALL NOT BE REPRODUCED WITHOUT THEIR WRITTEN PERMISSION.

STATE ROAD 54 & COUNTRY PLACE
NEW PORT RICHEY, FLORIDA 34655

McDONALD'S L/C: 009/2550
ADAMS ENGINEERING No. 2013.049

PLAN APPROVALS — SIGNATURE (2 REQUIRED) — DATE
REGIONAL MGR.
CONST. MGR.
OPERATIONS DEPT.
REAL ESTATE DEPT.
CO-SIGN SIGNATURES
CONTRACTOR
OWNER

STATUS	DATE	BY
DATE DRAWN	02/2014	EAO
PLAN CHECKED	02/2014	TDH
AS-BUILT		

C3.0

FULL PATH: I:_Projects\2013\2013.049_McD Trinity - Duck Slough\Drawings\C3.0 EROSION CONTROL PLAN
PLOTTER: Adobe PDF
PLOT TIME: 11:04:35 AM
PLOT DATE: Friday, March 21, 2014
PLOTTED BY: Edgar Ortiz
FILENAME: C3.0 EROSION CONTROL PLAN.dwg

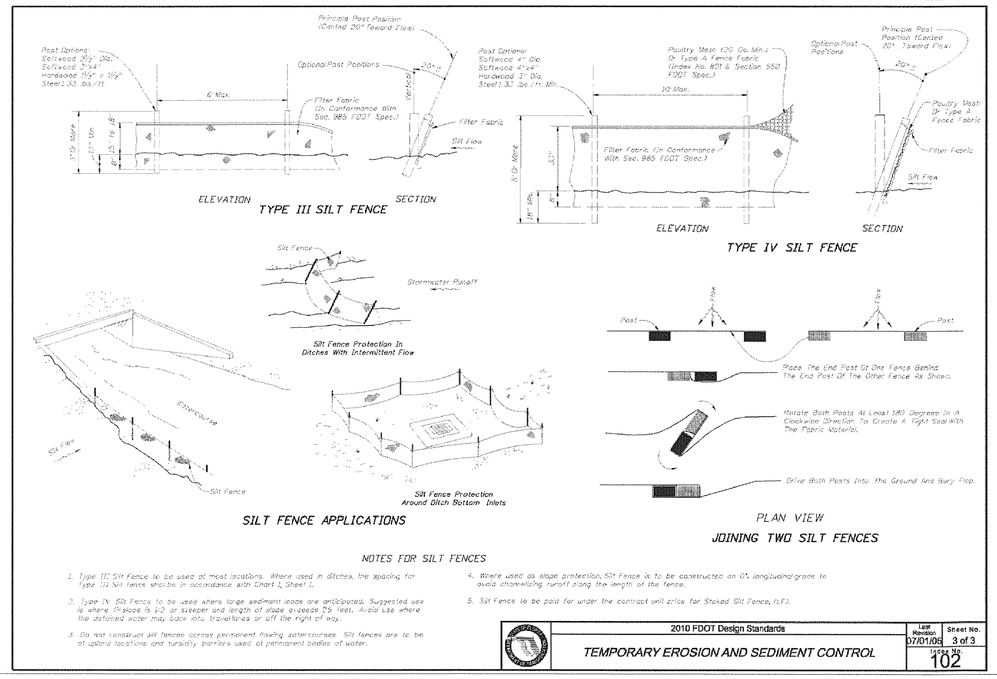

1 FDOT TYPE III SILT FENCE DETAIL

NTS

SF

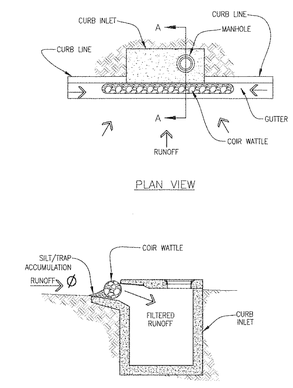

Ø SEDIMENT REMOVAL SHALL BE PERFORMED CONTINUOUSLY FOR PROPER FUNCTION.

IP

2 CURB INLET PROTECTION COIR WATTLE OPTION

NTS

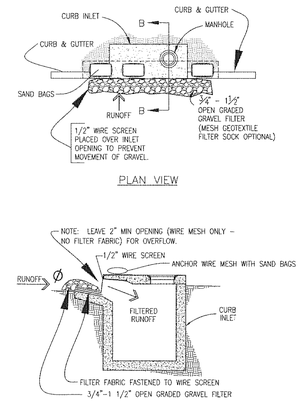

Ø SEDIMENT REMOVAL SHALL BE PERFORMED CONTINUOUSLY FOR PROPER FUNCTION.

(HIGHER VOLUME TRAFFIC AREAS) IP

3 CURB INLET PROTECTION GRAVEL AND WIRE MESH OPTION

NTS

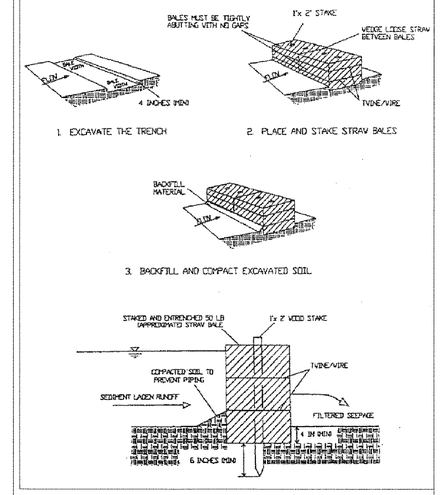

4 STRAW BALE BARRIER

NTS

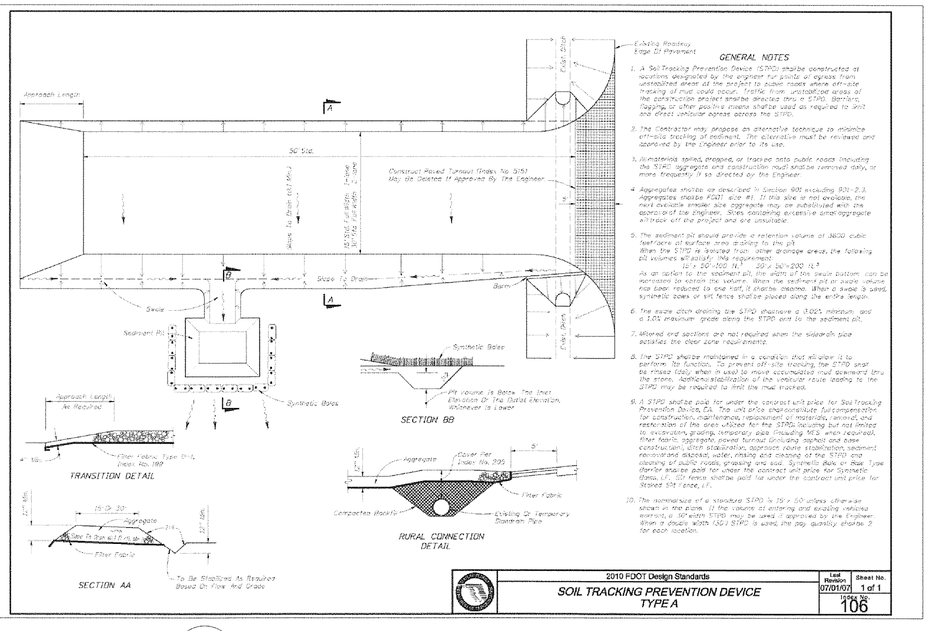

5 VEHICLE TRACKING CONTROL - CONSTRUCTION ENTRANCE/EXIT

NTS

VTC

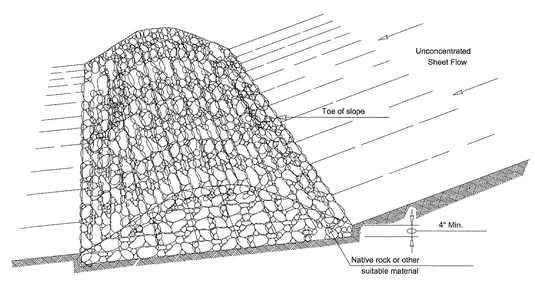

RCD

ROCK FILTER DAM SHALL BE SECURED WITH 20 GAUGE GALVANIZED WOVEN WIRE MESH WITH 1" DIAMETER HEXAGONAL OPENINGS. THE AGGREGATE SHALL BE PLACED ON THE MESH TO THE HEIGHT & SLOPES SPECIFIED. THE MESH SHALL BE FOLDED AT THE UPSTREAM SIDE OVER THE AGGREGATE AND TIGHTLY SECURED TO ITSELF ON THE DOWNSTREAM SIDE USING WIRE TIES OR HOG RINGS. IN STREAM USE THE MESH SHOULD BE SECURED OR STAKED TO THE STREAM BED PRIOR TO AGGREGATE PLACEMENT.

6 ROCK CHECK DAM

NTS

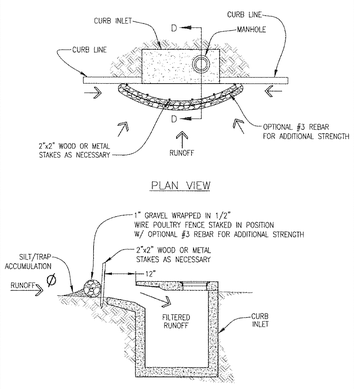

Ø SEDIMENT REMOVAL SHALL BE PERFORMED CONTINUOUSLY FOR PROPER FUNCTION.

IP

7 ROCK FILLED SOCKS CURB INLET PROTECTION

NTS

OWNER'S CERTIFICATION

PER SECTION 2.8.1.C OF THE BASIS OF REVIEW, THE OWNER/PERMITTEE SHALL ENSURE THAT THE SURFACE WATER AND STORMWATER MANAGEMENT MEASURES PROPOSED IN THE PLAN ARE EFFECTIVELY IMPLEMENTED UNTIL COMPLETION OF THE PROJECT OR UNTIL THE PERMANENT SURFACE WATER MANAGEMENT SYSTEM IS OPERATIONAL.

CROSSROAD PROPERTIES, LLC
A FLORIDA LIMITED LIABILITY COMPANY

BY: _____
TIM D. HODES, AUTHORIZED AGENT FOR RICHARD D. CROSSLAND - MANAGER

_____
DATE

SURVEY INFORMATION

PREPARED BY:	LEGAL DESCRIPTION:
GEORGE A. SHIMP II & ASSOC., INC 3301 DeSOTO BOULEVARD, SUITE D PALM HARBOR, FLORIDA 34683 (727) 784-5496 DATE: JULY 2013	A PORTION OF SECTION 30, TOWNSHIP 26 SOUTH, RANGE 17 EAST, PASCO COUNTY FLORIDA McDONALD'S PARCEL CONTAINS 61,200 SQUARE FEET OR 1.40 ACRES, MORE OR LESS

PLAN SCALE: N.T.S.

ADDITION: McDONALD'S RESTAURANT

STREET ADDRESS: STATE ROAD 54 & COUNTRY PLACE

CITY	STATE
NEW PORT RICHEY	FLORIDA

COUNTY:	SURVEY:	ABSTRACT NO.
PASCO	----	----

L/C NUMBER:	CORPORATE DWG. NAME
009/2550	STANDARD EROSION CONTROL DETAILS

REV	DATE	DESCRIPTION	BY	ISSUE REF
---	---	---	---	---

Adams
2300 Gateway Centre, Blvd., Suite 210 • Morrisville, North Carolina 27560 • (919) 267-9000
FL DESIGN CORP. # 27944

TIM D. HODES, P.E. No. 67017, STATE OF FLORIDA, PROFESSIONAL ENGINEER

PLAN APPROVALS

	SIGNATURE (2 REQUIRED)	DATE
REGIONAL MGR.		
CONST. MGR.		
OPERATIONS DEPT.		
REAL ESTATE DEPT.		

CO-SIGN SIGNATURES

CONTRACTOR	
OWNER	

STATUS	DATE	BY
DATE DRAWN	02/2014	EAO
PLAN CHECKED	02/2014	TDH
AS-BUILT		

C3.1

OFFICE: FLORIDA REGION
ADDRESS: 10150 HIGHLAND MANOR DRIVE, SUITE 470; TAMPA, FLORIDA 33610

McDONALD'S®

THESE PLANS AND SPECIFICATIONS ARE THE PROPERTY OF McDONALD'S CORPORATION AND SHALL NOT BE REPRODUCED WITHOUT THEIR WRITTEN PERMISSION.

STATE ROAD 54 & COUNTRY PLACE
NEW PORT RICHEY, FLORIDA 34655

McDONALD'S L/C: 009/2550
ADAMS ENGINEERING No. 2013.049

FILENAME: C3.1 STANDARD EROSION CONTROL DETAILS.dwg PLOTTED BY: Edgar Ortiz PLOT DATE: Tuesday, March 18, 2014 PLOT TIME: 10:51:34 AM PLOTTER: Adobe PDF

McDONALD'S
STORMWATER POLLUTION PREVENTION PLAN NOTES

SITE EVALUATION, ASSESSMENT, & PLANNING:

PROJECT NAME:	*McDonald's Restaurant - L/C: 009/2550*
PROJECT ADDRESS:	*Northeast Quadrant of State Road 54 & Country Place; New Port Richey, Florida 34655*
SECTION: 30	TOWNSHIP: *26 S* RANGE: *17 E*
LATITUDE: 28° 11' 40" N	LONGITUDE: -82° 38' 11" W
DEVELOPER'S NAME:	*McDONALD'S USA, LLC*
DEVELOPER'S ADDRESS:	*10150 HIGHLAND MANOR DRIVE; SUITE 470; TAMPA, FLORIDA 33610*

Description of the Project and the types of Soil Disturbing Activities:

This project will consist of a complete construction of a fast food restaurant structure and its related site features.

Soil disturbing activities will include: demolition, striping and grubbing; installing a stabilized construction entrance, perimeter and other erosion and sediment controls throughout the site; grading; excavation, storm sewer, utilities and building foundations; construction of curb and gutter; parking lot; and preparation for final planting and seeding.

Runoff Coefficient, Soils and Rainfall Information:

The initial coefficient of runoff for the pre-construction site is "c" = 0.20. The post-construction coefficient of runoff for the site will be "c" = 0.90. The site is 1.40 acres and 3.24 acres will be disturbed by construction activities.

According to the USDA Soil Survey for Pasco County the soil is described as Pomona fine sand.

The site is in Pasco County which receives an average of 53" of rainfall annually.

Site Area:

The site is approximately 1.40 acres and 3.24 acres will be disturbed by construction activities.

Sequence of Major Events:

1. Install silt fences around perimeter of property and disturbed areas as shown.
2. Install inlet protection for all existing grate inlets, curb inlets and at the ends of all exposed storm sewer pipes, if present.
3. Construct temporary construction exit.
4. Commence grubbing and removal of vegetation in area to receive cut or fill.
5. Commence grading operation for building pad preparation (see grading plan).
6. Install all underground utilities.
7. Finalize pavement subgrade preparation.
8. Install all proposed storm sewer pipes and install inlet protection silt fences at ends of exposed pipes.
9. Construct all grate inlets and drainage structures. Inlet protection silt fences may be removed temporarily for this construction.
10. Remove silt fences around inlets and manholes no more than 48 hours prior to placing stabilized base course.
11. Install base material as required for pavement, curb & gutter.
12. Install all paving, curb & gutter.
13. Remove temporary construction exit, silt fences, and inlet protection devices.
14. Complete planting and/or seeding of vegetated areas to accomplish stabilization, in accordance with the landscaping plan.

Name of Receiving Waters:

The site will drain through an on-site storm water management system and then drain into the Shopping Center Master Storm Water Pond. It is the opinion of ADAMS that construction activities at this site with the practices contained in this SWPPP should not have an adverse impact on these water quality parameters.

EROSION AND SEDIMENT CONTROLS:

STABILIZATION PRACTICES

The contractor shall denude only areas where it is expected to be graded or altered within a two (2) week time frame. All pervious areas of the site included in grading that are disturbed during construction shall be graded and prepared with a combination of sod and/or seeding and mulched.

Temporary Stabilization - Top soil stock piles and disturbed portions of the site where construction activity temporarily ceases for at least 21 days shall be stabilized with temporary seed and mulch no later than 14 days from the last construction activity in that area. Grass seed shall be a mixture of 20 parts of Bermuda and 80 parts of Pensacola Bahia. The separate types of seed used shall be thoroughly dry mixed immediately before sowing. Seed which has become straw or hay consisting of oat, rye or wheat straw, or of Panola, peanut, coastal Bermuda or Bahia grass hay. Only un-deteriorated mulch which can be readily cut into the soil shall be used. Areas of the site which are to be paved will be temporarily stabilized by applying stabilization and base until bituminous pavement can be applied.

Permanent Stabilization - Disturbed portion of the site where construction activity permanently ceases shall be stabilized with sod no later than 14 days after the last construction activity.

Wind Erosion Stabilization -Areas within future units where earthwork is completed shall be completely seeded and mulched. Areas where construction operations will be continuous, fugitive dust shall be managed by applying a water spray to saturate the surface soils on a daily basis (or as needed) to maintain minimal dust transport. Fugitive dust shall be monitored continuously and additional measures may need to be taken to control off site transport of unacceptable levels of dust.

STRUCTURAL PRACTICES

Erosion Protection - During the construction phases, appropriate practices including, but not limited to: silt fence barriers, stabilized construction entrance, rock check dams, inlet protection with block and gravel and fabric material, and watering or other methods necessary will be implemented to control erosion.

Sediment Traps - Contractor shall excavate around all on-site drainage inlets and provide erosion control and overflow measures which shall serve as localized temporary sediment traps. At the contractor's discretion, the areas surrounding the on-site inlets can be excavated as much as two feet below the existing ground in order to allow any silt to be collected and removed prior to completion of the grading.

STORM WATER MANAGEMENT

Storm water drainage will be provided by an on-site storm drain and catch basin system. Any accumulated sediment shall be removed from the sediment basins. It is the responsibility of the contractor to construct and continually maintain all storm drains and retention/detention areas in accordance with the approved construction plans.

SPECIFIED OTHER CONTROLS:

WASTE DISPOSAL

Waste Materials - All waste materials shall be collected and contained in a controlled area pursuant to any state and/or local solid waste regulations. All trash and construction debris generated from construction is to be removed from the site and disposed of appropriately. No construction materials shall be buried on site. All personnel shall be instructed regarding the correct procedure for waste disposal. Notices stating these practices shall be posted in the construction office trailer. The job site superintendent (construction manager) responsible for the day-to-day site operations shall be responsible for seeing that these procedures are followed.

Hazardous Waste - If any, all hazardous waste materials shall be disposed of in the manner specified by state and/or local regulations. The contractor shall be responsible for seeing that these practices are followed.

Sanitary Waste - All sanitary waste shall be collected from the portable units by a license sanitary waste management contractor as required by state and/or local codes and regulations.

OFFSITE VEHICLE TRACKING

A stabilized construction entrance shall be provided to help reduce vehicle tracking of sediments. The paved streets adjacent to the site entrance will be swept daily to remove any excess mud, dirt or rock tracked from the site. Dump trucks hauling material from the site shall be covered with a tarpaulin.

TIMING OF CONTROL MEASURES:

As indicated in the Sequence of Major Events, staked silt fence and stabilized construction entrance shall be constructed prior to clearing or grading of any other portions of the site. Areas where construction activity temporarily ceases for more than 21 days shall be stabilized with a temporary seed and mulch within 14 days of the last disturbance. Once construction activities ceases permanently in an area, that area shall be stabilized with permanent seed and mulch. After the entire site is stabilized, the accumulated sediment will be removed from the silt fence and/or other controls shall be removed.

CERTIFICATION OF COMPLIANCE WITH FEDERAL, STATE AND LOCAL REGULATIONS:

The storm water pollution prevention plan reflects the jurisdictional and Water Management District requirements for storm water management and erosion & sediment control as established by the jurisdiction's storm water management technical manual, the Florida Administrative Code, Chapter 40D-4 and 40D-40, and the Water Management District.

MAINTENANCE/INSPECTION PRACTICES:

EROSION AND SEDIMENT CONTROL INSPECTION AND MAINTENANCE PRACTICES

These are the inspection and maintenance practices that shall be used to maintain erosion and sediment control:

1. Less than one half of the site shall be denuded at one time.
2. All control measures shall be inspected at least once each week and following any storm event of 0.5-inches or greater by a contractor's representative.
3. All measures shall be maintained in good working order; if a repair is necessary, it shall be initiated within 24 hours of report.
4. Built up sediment shall be removed from silt fence when it has reached one-third the height of the silt fence.
5. Silt fence shall be inspected regularly for depth of sediment, tears, to see if the fabric is securely attached to the fence posts, and to see that the fence posts are firmly in the ground.
6. The sediment basins, if present, shall be inspected for depth of sediment, and built up sediment shall be removed when it reaches 10% of the design capacity or at the end of the job.
7. Temporary and permanent grassing and mulching and sodding shall be inspected for bare spots, washouts, and healthy growth.
8. A maintenance inspection report shall be made after each inspection by the contractor and shall be kept in an active log readily available at the job site.
9. Either the site superintendent or his designees shall be responsible for inspections, maintenance, repair activities and completing the inspection and maintenance report.
10. Personnel selected for inspection and maintenance responsibilities shall receive training from the site superintendent. They shall be trained in all the inspection and maintenance practices necessary for keeping the erosion and sediment controls used on site in good working order.

NON-STORM WATER DISCHARGE

It is expected that the following non-storm water discharges which are allowed under the NPDES General Permit may occur from the site during the construction period. These types of discharges will be allowed under the conditions that no pollutants will be allowed to come in contact with the water prior to or after its discharge.

1. Discharges from firefighting activities
2. Fire hydrant flushings (See Note below)
3. Waters used to spray off loose solids from vehicles (waste waters from a more thorough cleaning, including the use of detergents or other cleaners is not authorized by this part) or control dust in accordance with Part V.D. 2.c. (2) of the Generic Permit
4. Potable water sources such as waterline flushings, routine external building washdown which does not use detergents, irrigation drainage (without detergents present) (See Note below)
5. Pavement washwaters where spills or leaks of toxic or hazardous materials have not occurred (unless all spill materials has been removed) and where detergents have not been used
6. Air conditioning condensate
7. Springs
8. Foundation or footing drains where flows where no contamination with process materials such as solvents is present

NOTE: Contractor shall neutralize any super-chlorinated water from water distribution pipes before releasing it into the environment. Neutralization techniques are available from the Engineer.

INVENTORY FOR POLLUTION PREVENTION PLAN:

The following materials or substances with known hazardous properties are expected to be present onsite during construction: Cleaning solvents, Detergents, Petroleum based products, Paints, Paint solvents, Acids, Fertilizers, Pesticides, Concrete, Concrete additives, Asphaltic Concrete, Tar and Soil stabilization additives.

SPILL PREVENTION:

MATERIAL MANAGEMENT PRACTICES

The following are the material management practices that shall be used to reduce the risk of spill or other accidental exposure of materials and substances to storm water runoff.

Good Housekeeping:
The following good housekeeping practices shall be followed onsite during the construction project.
1. An effort shall be made to store only enough products required to complete the project.
2. All materials stored on site shall be stored in a neat orderly manner in their appropriate containers and if possible, under a roof or other contained enclosure.
3. Products shall be kept in their original containers with the original manufacturer's label.
4. Substances shall not be mixed with one another unless recommended by the manufacturer.
5. Whenever possible, all of the product shall be used before disposing of the container.
6. Manufacturer's recommendations for proper use and disposal shall be followed.
7. The site superintendent shall inspect daily to ensure proper use and disposal of materials on site.

Hazardous Products:
These practices are used to reduce the risks associated with hazardous materials.
1. Products shall be kept in original containers unless the containers are not sealable.
2. Original labels and Material Safety Data Sheets (MSDS) shall be retained; they contain important product information.
3. If surplus product must be disposed of, manufacturer's and/or state and local recommended methods of proper disposal shall be followed.

PRODUCT SPECIFIC PRACTICES

Petroleum Products:
All on site vehicles shall be monitored for leaks and receive regular preventative maintenance to reduce the chance of leakage. Petroleum products shall be stored in tightly sealed containers which are clearly labeled. Any asphalt substances used onsite shall be applied accordingly to the manufacturer's recommendations.

Fertilizers:
Fertilizers shall be applied only in the minimum amount recommended by the manufacturer. Once applied, fertilizer shall be worked into the soil to limit exposure to storm water. Storage shall be in a covered shed. The contents of any partially used bags of fertilizer shall be transferred to a sealable plastic bin to avoid spills.

Paints:
All containers shall be tightly sealed and stored when not required for use. Excess paint shall not be discharged to the storm sewer system but shall be properly disposed of according to manufacturer's instructions and/or state and local regulations.

Concrete Trucks:
Contractor shall designate an area for discharge of surplus concrete or drum wash water and shall install a containment berm around this area to prevent runoff to the remainder of the site. Hard debris shall be disposed of by contractor upon completion of the project.

SPILL CONTROL PRACTICES:

In addition to the good housekeeping and materials practices discussed in the previous sections of this plan, the following practices shall be followed for spill prevention and cleanup:

1. Manufacturers recommended methods for spill clean up shall be clearly posted and site personnel shall be made aware of the procedures and the location of the information and clean up supplies. Material Safety Data Sheets (MSDS's) for each substance with hazardous properties that is used on the job site shall be obtained and used for the proper management of potential wastes that may result from these products. An MSDS will be posted in the immediate area where such product is stored and/or used and another copy of each MSDS will be maintained in the SWPPP file at the job site construction trailer office.
2. Materials and equipment necessary for spill clean up shall be kept in the material storage area onsite. Equipment and materials shall include, but not be limited to brooms, dust pans, mops, rags, gloves, goggles, kitty litter absorbent, sand, sawdust and plastic and metal trash containers specifically for this purpose.
3. All spills shall be cleaned up immediately after discovery.
4. The spill area shall be kept well ventilated and personnel shall wear appropriate protective clothing to prevent injury from contact with hazardous substance.
5. Spills of toxic or hazardous material shall be reported to the appropriate state or local government agency, regardless of the size.

The spill prevention plan shall be adjusted to include measures to prevent this type of spill from recurring and the clean up procedures for future use. A description of the spill, its cause and the clean up measures shall also be noted. Any owner or operator of a facility who has knowledge of any release of a hazardous substances from a facility in a quantity equal to or exceeding the reportable quantity in a 24 hour period shall notify the State Warning Point within one working day of the release. FDEP State Warning Point **1-850-413-9911** or **1-800-320-0519**.

NOTICE OF TERMINATION:

A notice of termination shall be submitted to the FDEP after the construction has been completed and the site has undergone final stabilization.

POLLUTION PREVENTION PLAN CERTIFICATION:

"I certify under penalty of law that this document and all attachments were prepared under my direction or supervision in accordance with a system designed to assure that qualified personnel properly gathered and evaluated the information submitted. Based on my inquiry of the person or persons who manage the system, or those persons directly responsible for gathering the information, the information submitted is, to the best of my knowledge and belief, true, accurate, and complete. I am aware that there are significant penalties for submitting false information, including the possibility of fine and imprisonment for knowing violations."

NAME: ______________________ TITLE: ______________________ COMPANY: ______________________

SIGNATURE: ______________________ DATE: ______________________

CONTRACTOR'S CERTIFICATION:

"I certify under penalty of law that I understand, and shall comply with, the terms and conditions of the State of Florida Generic Permit for Stormwater Discharge from Large and Small Construction Activities and this Stormwater Pollution Prevention Plan prepared thereunder."

NAME	TITLE	COMPANY NAME, ADDRESS, AND PHONE #	DATE	SIGNATURE	RESPONSIBILITY

OWNER'S CERTIFICATION

PER SECTION 2.8.1.C OF THE BASIS OF REVIEW, THE OWNER/PERMITTEE SHALL ENSURE THAT THE SURFACE WATER AND STORMWATER MANAGEMENT MEASURES PROPOSED IN THE PLAN ARE EFFECTIVELY IMPLEMENTED UNTIL COMPLETION OF THE PROJECT OR UNTIL THE PERMANENT SURFACE WATER MANAGEMENT SYSTEM IS OPERATIONAL.

CROSSROAD PROPERTIES, LLC
A FLORIDA LIMITED LIABILITY COMPANY

BY: ______________________
TIM D. HODES, AUTHORIZED AGENT FOR RICHARD D. CROSSLAND - MANAGER

____
DATE

SURVEY INFORMATION

PREPARED BY:
GEORGE A. SHIMP II & ASSOC., INC
3301 DeSOTO BOULEVARD, SUITE D
PALM HARBOR, FLORIDA 34683
(727) 784-5496
DATE: JULY 2013

LEGAL DESCRIPTION:
A PORTION OF SECTION 30, TOWNSHIP 26 SOUTH, RANGE 17 EAST, PASCO COUNTY FLORIDA
McDONALD'S PARCEL CONTAINS 61,200 SQUARE FEET OR 1.40 ACRES, MORE OR LESS

PLAN SCALE: ----

ADDITION
McDONALD'S RESTAURANT

STREET ADDRESS
STATE ROAD 54 & COUNTRY PLACE

CITY: NEW PORT RICHEY STATE: FLORIDA

COUNTY:	SURVEY:	ABSTRACT NO.
PASCO	----	----

L/C NUMBER: 009/2550
CORPORATE DWG. NAME: STORM WATER POLLUTION PREVENTION PLAN

REV	DATE	DESCRIPTION	BY	ISSUE REF
---	---	---	---	---
---	---	---	---	---
---	---	---	---	---
---	---	---	---	---

Adams
27524 Cashford Circle, Ste. 101 ■ Wesley Chapel, Florida 33544 ■ (813) 929-7499
FLORIDA COA# 27614

TIM D. HODES LICENSE No 67017 STATE OF FLORIDA PROFESSIONAL ENGINEER 3-24-14

OFFICE: FLORIDA REGION
ADDRESS: 10150 HIGHLAND MANOR DRIVE, SUITE 470; TAMPA, FLORIDA 33610

McDONALD'S®

THESE PLANS AND SPECIFICATIONS ARE THE PROPERTY OF McDONALD'S CORPORATION AND SHALL NOT BE REPRODUCED WITHOUT THEIR WRITTEN PERMISSION.

STATE ROAD 54 & COUNTRY PLACE
NEW PORT RICHEY, FLORIDA 34655

MCDONALD'S L/C: 009/2550
ADAMS ENGINEERING No. 2013.049

PLAN APPROVALS — SIGNATURE (2 REQUIRED) — DATE
REGIONAL MGR.
CONST. MGR.
OPERATIONS DEPT.
REAL ESTATE DEPT.
CO-SIGN SIGNATURES
CONTRACTOR
OWNER

STATUS	DATE	BY
DATE DRAWN	02/2014	EAO
PLAN CHECKED	02/2014	TDH
AS-BUILT		

C3.2

FULL PATH: I:_Projects\2013\2013.049_McD Trinity - Duck Slough\Drawings\C3.2 STORM WATER POLLUTION PREVENTION PLAN
PLOTTER: Adobe PDF
PLOT TIME: 10:54:23 AM
PLOT DATE: Tuesday, March 18, 2014
PLOTTED BY: Edgar Ortiz
FILENAME: C3.2 STORM WATER POLLUTION PREVENTION PLAN.dwg

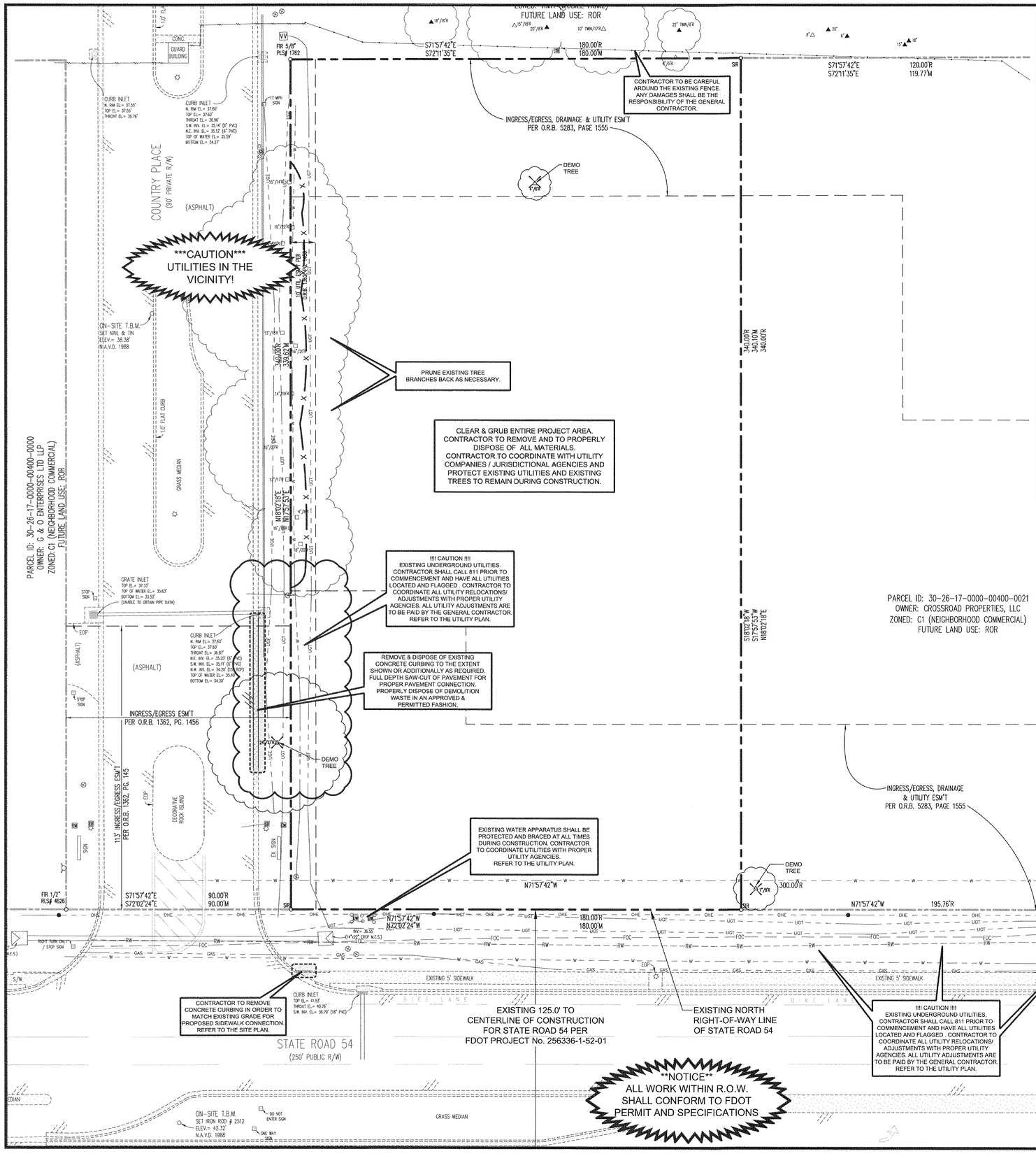

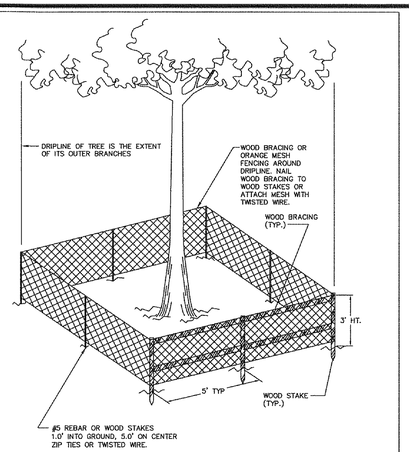

NOTE: BARBED WIRE FENCING IS NOT PERMISSIBLE

TREE PROTECTION NOTES:

1. MINIMUM RADIUS TO BE PROTECTED:
   A. HARDWOODS – 2/3 DRIPLINE
   B. CONIFERS & SABAL PALMS – ENTIRE DRIPLINE.
2. UPRIGHTS – NO LESS THAN 2" X 2" LUMBER OR #5 REBAR
3. HORIZONTALS – WOOD BRACING OF NO LESS THAN 1" X 4" LUMBER OR ORANGE MESH FENCING AROUND DRIPLINE.
4. BARRIERS SHALL BE ERECTED AROUND ALL PROTECTED TREES AND PALMS, AND INSPECTED BY JURISDICTIONAL REPRESENTATIVE BEFORE CONSTRUCTION BEGINS.
5. UPRIGHT POSTS ARE TO BE AT LEAST 4 FEET IN LENGTH WITH A MINIMUM OF 1 FOOT ANCHORED IN GROUND AND 3 FEET ABOVE GROUND.
6. BARRIERS TO REMAIN IN PLACE UNTIL ALL PAVING, CONSTRUCTION AND HEAVY EQUIPMENT IS OUT OF AREA.

TREE PROTECTION BARRICADE

48 HOURS BEFORE YOU DIG
CALL SUNSHINE
811
IT'S THE LAW IN FLORIDA

sunshine state ONE CALL of florida

GRAPHIC SCALE
0 20 40 FEET
SCALE: 1"=20'

NOTES:
1. Permit Plans on-site:
   A copy of the approved permit and plans shall be available on-site at all times when any development activity is occurring on the site.
2. If, during construction activities, any evidence of historic resources including, but not limited to, aboriginal or historic pottery, prehistoric stone tools, bone or shell tools, historic trash pits, or historic building foundations are discovered, work shall come to an immediate stop, and Pasco County and the Florida Division of Historical Resources shall be notified within two working days. Refer to Pasco County Land Development Code Section 809 - Cultural Resources.
3. Refer to sheet C2.3 for additional construction notes.

SITE LEGEND

- DEMOLITION LIMITS
- 40 — EXISTING CONTOURS
- X — X — X — PROPOSED TREE PROTECTION BARRICADE
- DEMO — TREES/LANDSCAPE TO BE REMOVED

TREE LEGEND

- 00" ■ – CYPRESS
- 00" △ – OAK
- 00" ▲ – PALM
- 00" □ – PINE

DEMOLITION & TREE PROTECTION NOTES

1. CONTRACTOR IS RESPONSIBLE FOR PROTECTION OF ALL PROPERTY CORNERS AND PINS.
2. CONTRACTOR SHALL REMOVE PAVEMENT IN ACCORDANCE WITH SPECIFICATIONS.
3. CONTRACTOR IS RESPONSIBLE FOR THE REPAIR OF ANY DAMAGE TO EXISTING IMPROVEMENTS DURING CONSTRUCTION, SUCH AS, BUT NOT LIMITED TO: DRAINAGE, UTILITIES, PAVEMENT, STRIPING, CURB, LANDSCAPE, ETC. REPAIRS SHALL BE EQUAL TO OR BETTER THAN EXISTING CONDITIONS.
4. ALL WORK ON THIS PLAN SHALL BE DONE IN STRICT ACCORDANCE WITH SITE WORK SPECIFICATIONS.
5. CONTRACTOR SHALL COMPLY TO THE FULLEST EXTENT WITH THE LATEST STANDARDS OF OSHA DIRECTIVES OR ANY OTHER AGENCY HAVING JURISDICTION FOR EXCAVATION AND TRENCHING PROCEDURE. CONTRACTOR SHALL USE SUPPORT SYSTEMS, SLOPING, BENCHING, OR OTHER MEANS OF PROTECTION, INCLUDING BUT IS NOT LIMITED TO, ACCESS AND EGRESS FROM ALL EXCAVATION AND TRENCHING. CONTRACTOR IS RESPONSIBLE TO COMPLY WITH PERFORMANCE CRITERIA FOR OSHA.
6. CONTRACTOR SHALL BE RESPONSIBLE FOR PROTECTING THE PUBLIC DURING CONSTRUCTION, INCLUDING BUT NOT LIMITED TO: CONSTRUCTION FENCING, BARRICADES, SIGNAGE, ETC.
7. CONTRACTOR IS RESPONSIBLE FOR VERIFYING ALL UTILITIES AND NOTIFYING THE APPROPRIATE UTILITY COMPANY PRIOR TO BEGINNING CONSTRUCTION.
8. CONTRACTOR SHALL VERIFY HORIZONTAL AND VERTICAL LOCATION OF ALL EXISTING UTILITIES PRIOR TO CONSTRUCTION AND NOTIFY THE ENGINEER OF RECORD OF ANY UTILITY CONFLICTS.
9. CONTRACTOR SHALL SECURE TREE REMOVAL & DEMOLITION PERMIT FROM JURISDICTIONAL AGENCY PRIOR TO MOBILIZATION.
10. ALL DEMOLITION WORK OR CONSTRUCTION VEHICLE TRAFFIC WITHIN THE DRIP ZONE OF ANY TREE TO BE SAVED OR TRANSPLANTED SHALL BE COORDINATED. ALL DEMOLITION SHALL BE CLOSELY COORDINATED WITH TREE PRESERVATION AND TRANSPLANTING ACTIVITIES, AS OUTLINED IN THE PRE-CONSTRUCTION MEETING, WITH THE PROJECT MANAGEMENT TEAM MEMBERS.
11. THE CONTRACTOR SHALL CREATE AMPLE STAGING AND STOCKPILING AREAS FOR TREE TRANSPLANTS, CRUSHED CONCRETE, TOPSOIL, ETC. IN ACCORDANCE WITH COUNTY SPECIFICATIONS.

SURVEY INFORMATION

PREPARED BY:
GEORGE A. SHIMP II & ASSOC., INC
3301 DeSOTO BOULEVARD, SUITE D
PALM HARBOR, FLORIDA 34683
(727) 784-5496
DATE: JULY 2013

LEGAL DESCRIPTION:
A PORTION OF SECTION 30, TOWNSHIP 26 SOUTH, RANGE 17 EAST, PASCO COUNTY FLORIDA
McDONALD'S PARCEL CONTAINS 61,200 SQUARE FEET OR 1.40 ACRES, MORE OR LESS

PLAN SCALE: ---

ADDITION
McDONALD'S RESTAURANT

STREET ADDRESS
STATE ROAD 54 & COUNTRY PLACE

CITY	STATE
NEW PORT RICHEY	FLORIDA

COUNTY:	SURVEY:	ABSTRACT NO.
PASCO	----	----

L/C NUMBER:	CORPORATE DWG. NAME
009/2550	DEMOLITION PLAN

REV	DATE	DESCRIPTION	BY	ISSUE REF
----	----	----	----	----
----	----	----	----	----
----	----	----	----	----
----	----	----	----	----

Adams
7700A Gunn Highway, Ste 116 • Tampa, Florida 33626 • (813) 925-7999
FLORIDA COA# 27934

T. M. D. HODES
LICENSED
No. 67017
STATE OF FLORIDA
PROFESSIONAL ENGINEER

McDONALD'S®
THESE PLANS AND SPECIFICATIONS ARE THE PROPERTY OF McDONALD'S CORPORATION AND SHALL NOT BE REPRODUCED WITHOUT THEIR WRITTEN PERMISSION.

OFFICE	FLORIDA REGION
ADDRESS	10150 HIGHLAND MANOR DRIVE, SUITE 470, TAMPA, FLORIDA 33610
McDONALD'S L/C: 009/2550	STATE ROAD 54 & COUNTRY PLACE
ADAMS ENGINEERING No. 2013.049	NEW PORT RICHEY, FLORIDA 34655

PLAN APPROVALS

SIGNATURE (2 REQUIRED)	DATE

CO-SIGN SIGNATURES
REGIONAL MGR. / CONST. MGR. / OPERATIONS DEPT. / REAL ESTATE DEPT. / CONTRACTOR / OWNER

STATUS	DATE	BY
DATE DRAWN	02/2014	EAO
PLAN CHECKED	02/2014	TDH
AS-BUILT		

C3.3

FULL PATH: U:\Projects\2013\2013.049_McD Trinity - Dock Slough\Drawings\1_Project\2013.049 - Dock Slough.dwg
PLOTTED BY: Edgar Ortiz
PLOT DATE: Friday, March 21, 2014
PLOT TIME: 10:47:20 AM
PLOTTER: Adobe PDF
FILENAME: C3.3 DEMOLITION PLAN.dwg

SITE LEGEND

Symbol	Description	Symbol	Description
(line)	BOUNDARY LINE	(10)	PARKING NUMBER
(line)	PROPOSED CURBS	♿	ACCESSIBLE PARKING
(dashed)	EXISTING CURBS	(shaded)	PROPOSED ASPHALT PAVEMENT
(stippled)	PROPOSED CONCRETE		

PARKING SUMMARY

PARKING REQUIREMENT: 1 SPACE PER 150 SF. (4,395/150) = 29.3

TOTAL SPACES PROVIDED **42**	15	SPACES 9' x 20' @ 90° - 24' DRIVE ISLE
	21	SPACES 9' x 21' @ 60° - 18' DRIVE ISLE
	04	SPACES 9' x 23' @ PARALLEL - 12' DRIVE ISLE
TOTAL SPACES REQUIRED **29**	02 ♿	HC SPACES 12' x 21' @ 60° - 18' DRIVE ISLE
	01	BICYCLE PARKING: (0.02 PER PARKING PROVIDED)
	00	MOTORCYCLE VEHICLE SPACES (IF REQUIRED)
		BUILDING AREA: 4,395 SF

BENCHMARK DESCRIPTION

THE ELEVATIONS SHOWN HEREON ARE BASED ON THE NORTH AMERICAN VERTICAL DATUM OF 1988 (N.A.V.D. 1988) AS ESTABLISHED FROM N.G.S. BENCH MARK "R 668", WITH AN ELEVATION OF 40.89 FEET N.A.V.D. 1988 (TO CONVERT ELEVATIONS TO N.G.V.D. 1929, ADD 0.84 FEET).

SITE PLAN NOTES

1. CONTRACTOR SHALL REFER TO ARCHITECTURAL BUILDING PLANS FOR EXACT LOCATION AND ORIENTATION OF EXTERIOR DOORS.
2. TRASH ENCLOSURE TO MATCH BUILDING FINISH AS APPROVED BY MCDONALD'S AREA CONSTRUCTION MANAGER. REFER TO ARCHITECTURAL PLANS FOR TRASH ENCLOSURE DETAILS. TRASH ENCLOSURE SHALL AT MINIMUM BE DESIGN AND CONSTRUCTED USING ANY COUNTY STANDARDS. CONTRACTOR TO COORDINATE DESIGN SPECIFICATIONS WITH SOILS REPORT AND MCDONALD'S.
3. LOCATION OF SIGNS ARE APPROXIMATE. IT IS THE RESPONSIBILITY OF THE SIGN CONTRACTOR TO VERIFY COMPLIANCE WITH SETBACK, SIZE, HEIGHT AND RELATED ZONING REQUIREMENTS PRIOR TO SETTING.
4. THE LOCATION OF THE MENU BOARD AND PRE SELL BOARDS ARE NOT EXACT. IT IS THE RESPONSIBILITY OF THE CONTRACTOR TO VERIFY THE DIMENSIONS AND ORIENTATION WITH THE MCDONALD'S AREA CONSTRUCTION MANAGER.
5. ALL DIMENSIONS SHOWN ARE TO FACE OF CURB UNLESS NOTED OTHERWISE.
6. CONTRACTOR TO REFER TO ELECTRICAL ROUGH-IN PLAN FOR EXACT LOCATION OF LOOP DETECTOR AT DRIVE-THRU WINDOW. REFER TO SITE DETAIL SHEETS FOR DETECTOR LOOP SPECIFICATIONS.
7. CONTRACTOR TO REFER TO SITE UTILITY FOR PRELIMINARY LOT LIGHTING DESIGN LAYOUT. FINAL LAYOUT TO BE PROVIDED BY McDONALD'S CONSTRUCTION MANAGER.
8. LOT LIGHTING SHALL BE PLACED AT A MINIMUM OF THREE (3) FEET BEHIND THE BACK OF CURB.
9. HAND FORMED CURBS MAY BE REQUIRED IN ORDER TO AVOID LANDSCAPE/ SHRUB REPLACEMENT. ENGINEER OF RECORD IS NOT RESPONSIBLE FOR THE CONTRACTOR'S MEANS & METHODS OF CONSTRUCTION. CONTRACTOR IS RESPONSIBLE FOR THE REPAIR OF ANY DAMAGE TO EXISTING IMPROVEMENTS DURING CONSTRUCTION, SUCH AS, BUT NOT LIMITED TO: LANDSCAPE, DRAINAGE, UTILITIES, PAVEMENT, STRIPING, CURB, ETC. REPAIRS SHALL BE EQUAL TO OR BETTER THAN EXISTING CONDITIONS.

CONSTRUCTION SCHEDULE

MARK	MARK DESCRIPTION
1	FDOT TYPE 'D' CURB (FDOT INDEX 300) (REFER TO SITE PLAN NOTES #9)
2	SPECIAL BUILDING CURBING (REFER TO BUILDING CURBING DETAIL ON PAVING PLAN)
3	FLEXIBLE PAVEMENT (ASPHALT) (REFER TO PAVING PLAN)
4	HEAVY DUTY CONCRETE PAVEMENT (REFER TO PAVING PLAN)
5	WHEEL STOP (FDOT INDEX 300)
6	5" THICK CONCRETE OIL DRIP PAD (OPTIONAL)
7	PROPOSED 4" THICK SIDEWALK
8	HANDRAIL (REFER TO ARCHITECTURAL PLAN FOR DETAIL)
9	GUARD POST (BOLLARD)
10	SIDEWALK TO BE BRICK/TILE PER McDONALD'S CONSTRUCTION MANAGER
11	PAVING SYMBOLS / PAVING STRIPING
12	PROPOSED DOMESTIC WATER METER (REFER TO UTILITY PLAN)
13	PROPOSED FIRE LINE DCVA ASSEMBLY & FDC (REFER TO UTILITY PLAN)
14	(NOT USED)
15	PROPOSED CONCRETE DUMPSTER APRON (REFER TO PAVING PLAN)
16	PRE TREAT FOR TERMITE CONTROL
17	PAD MOUNTED TRANSFORMER PER DUKE ENERGY SPECIFICATIONS
18	ACCESSIBLE ROUTE W/ PAVEMENT MARKING. (CROSS SLOPE SHALL NOT EXCEED 1.9%)
19	PROPOSED LIGHT POLES (REFER TO PHOTOMETRIC PLAN)

PASCO COUNTY SITE PLAN NOTES

1. ALL UTILITY CONSTRUCTION SHALL COMPLY WITH PASCO COUNTY STANDARDS FOR DESIGN AND CONSTRUCTION OF WATER AND WASTEWATER FACILITIES SPECIFICATIONS, LATEST EDITION.
2. ALL ON-SITE WATER AND SEWER FACILITIES SHALL BE OWNED AND MAINTAINED BY THE OWNER-DEVELOPER.
3. INSTALLATION OF FUEL STORAGE TANKS REQUIRES REVIEW AND APPROVAL BY THE FIRE MARSHAL AND THE ISSUANCE OF A SEPARATE BUILDING PERMIT. APPROVAL OF THE SITE PLAN DOES NOT CONSTITUTE APPROVAL OF THE LOCATION OF THE FUEL TANKS.
4. ALL PROPOSED SIGNS MUST BE APPLIED FOR, APPROVED, AND PERMITTED ON AN INDIVIDUAL BASIS APART FROM ANY ULTIMATELY APPROVED SITE PLAN. APPROVAL OF THIS SITE PLAN DOES NOT CONSTITUTE APPROVAL OF ANY SIGNAGE.
5. HANDICAP PARKING SPACES WILL BE PROPERLY SIGNED AND STRIPED IN ACCORDANCE WITH FLORIDA STATUE 316, THE MANUAL ON UNIFORM TRAFFIC CONTROL DEVICES, OR OTHER APPLICABLE STANDARDS.
6. THE ARCHITECT/ENGINEER CERTIFIES THAT THE SITE HAS BEEN DESIGNED IN ACCORDANCE WITH THE AMERICANS WITH DISABILITIES ACT.
7. ALL ON-SITE PARKING SPACES WILL BE STRIPED AND SIGNED IN ACCORDANCE WITH THE MANUAL ON UNIFORM TRAFFIC DEVICES, LATEST EDITION. PARKING SPACES, DIRECTIONAL ARROWS, AND STOP BARS SHALL BE STRIPED IN WHITE. IT SHALL BE THE OWNER/DEVELPOER'S RESPONSIBILITY TO PROPERLY SIGN AND STRIPE IN ACCORDANCE WITH APPLICABLE STANDARDS.
8. THE OWNER/DEVELOPER ACKNOWLEDGES THAT THIS APPROVAL DOES NOT INCLUDE ANY WORK IN THE COUNTY RIGHT-OF-WAY. ALL RIGHT-OF-WAY WORK SHALL BE A FUNCTION OF AN APPROVED PASCO RIGHT-OF-WAY USE PERMIT.
9. ALL CLEAR-SITE AREAS SHALL BE KEPT FREE OF ANY SIGNAGE PLANTINGS, TREES, ETC. IN EXCESS OF THREE-AND-A-HALF (3-1/2) FEET IN HEIGHT.
10. NO IRRIGATION SYSTEM OR LANDSCAPING SHALL BE INSTALLED IN ANY COUNTY OR STATE RIGHT-OF-WAY WITHOUT ISSUANCE OF APPROPRIATE RIGHT-OF-WAY USE PERMIT.
11. THE OWNER/DEVELOPER ACKNOWLEDGES THAT THE SITE AND ITS SUBSEQUENT BUILDING PERMITS SHALL COMPLY WITH ALL REZONING/MPUD/PUD CONDITIONS.
12. ALL STRUCTURES, INCLUDING BUFFER WALLS, RETAINING WALLS, SIGNAGE, ETC. REQUIRE BUILDING PERMITS.
13. IN CONSIDERATION OF PASCO COUNTY'S AGREEMENT TO PROVIDE POTABLE WATER AND/OR RECLAIMED WATER TO THE SUBJECT PROPERTY, DEVELOPER/OWNER, AND IT'S SUCCESSORS AND ASSIGNS, AGREE TO THE FOLLOWING:
    A. IN THE EVENT OF PRODUCTION FAILURE OR SHORTFALL BY TAMPA BAY WATER, AS SET FORTH IN SECTION 3.19 OF THE INTERLOCAL AGREEMENT CREATING TAMPA BAY WATER, DEVELOPER/OWNER'S SHALL TRANSFER TO PASCO COUNTY AND ANY ALL WATER USE PERMITS OR WATER USE RIGHTS THE DEVELOPER/OWNER MAY HAVE TO USE OR CONSUME SURFACE OR GROUND WATER WITHIN PASCO COUNTY.
    B. PRIOR TO DEVELOPER/OWNER SELLING WATER OR WATER USE PERMITS OR WATER USE RIGHTS, DEVELOP/OWNER SHALL NOTIFY PASCO COUNTY, AND PASCO COUNTY SHALL HAVE A RIGHT OF FIRST REFUSAL TO PURCHASE SUCH WATER OR WATER USE PERMITS OR WATER USE RIGHTS.

PASCO COUNTY NOTES

1. If during construction activities any evidence of the presence of State and Federally protected plant and/or animal species is discovered, work shall come to an immediate stop and Pasco County shall be notified within two working days of the plant and/or animal species found on the site.
2. If during construction activities any evidence of historic resources, including but not limited to aboriginal or historic pottery, prehistoric stone tools, bone or shell tools, historic trash pits, or historic building foundation, are discovered, work shall come to an immediate stop and the Florida Department of Historic Resources (State Historic Preservation Officer) and Pasco County shall be notified within two working days of the resources found on the site. Refer to Pasco County Land Development Code Section 809 - Cultural Resources.

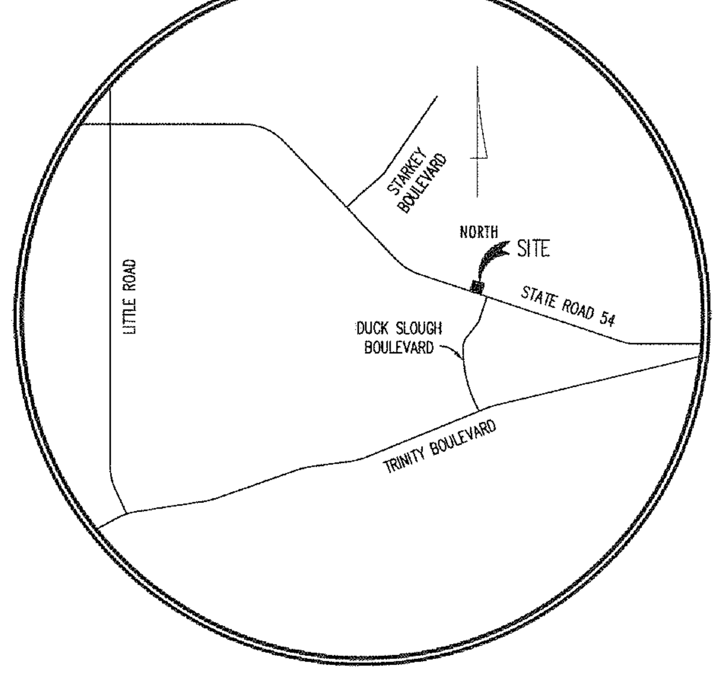

VICINITY MAP

NOT TO SCALE

48 HOURS BEFORE YOU DIG
CALL SUNSHINE
811
IT'S THE LAW IN FLORIDA

sunshine state ONE CALL of florida

PROJECT SUMMARY

The proposed project will consist of a new McDonald's restaurant located at the northeast quadrant of State Road 54 & Country Place in New Port Richey, Florida. The proposed McDonald's building will be 4,395 SF with approximately 66 seats, along with its site development features, including but not limited to required parking, vehicular/pedestrian access, vehicle use areas, and utilities.

PAVING SPECIFICATION

VERIFY W/McDONALD'S:	ASPHALT: ☒	CONCRETE: ☒
CONTRACTOR TO BID:	ASPHALT: ☒	CONCRETE: ☒

ALL PAVING/SUBGRADE SPECS TO COMPLY WITH GEOTECHNICAL REPORT AS PREPARED BY:
COMPANY NAME: UNIVERSAL ENGINEERING SCIENCES
ISSUED DATE: JULY 2, 2013
PROJECT No.: 0830.1300292

NOTE:
McDONALD'S ENGINEER RESERVES THE RIGHT TO REQUEST A COMPACTION TEST AND/OR A CORE SAMPLE. IF TESTS PROVE CORRECT, PER ABOVE SPECIFICATION, TESTS WILL BE AT THE EXPENSE OF McDONALD'S, OTHERWISE, G.C. WILL BE CHARGED.

SIGNAGE LEGEND

No.	MRK.	DESCRIPTION	SIZE
2	1	R1-1 - "STOP" SIGN	30"x30"
1	2	R3-5R - "RIGHT ARROW ONLY" SIGN	30"x36"
2	3	R5-1 - "DO NOT ENTER" SIGN	30"x30"
1	4	R3-2 - "NO LEFT TURN" SIGN	30"x30"

Contractor shall comply with the latest edition of the Manual on Uniform Traffic Control Devices (MUTCD) & the Florida Department of Transportation (FDOT) Standards.

STRIPING NOTE

1. ALL STRIPING SHALL BE WHITE UNLESS OTHERWISE NOTED.
2. ALL STRIPING SHALL BE 6" IN ACCORDANCE WITH PASCO COUNTY LAND DEVELOPMENT CODE.
3. REFER TO ACCESSIBLE PARKING DETAIL FOR STRIPING GUIDE.
4. BOTTOM OF SIGNS SHALL BE 7.0' MIN. FROM FINISHED GRADE.
5. STOP BARS SHALL BE 24" WHITE STRIPE PER FDOT STANDARDS.

SITE INFORMATION

TOTAL LAND AREA:	1.40 Ac. (61,200 SF)
PASCO COUNTY PROPERTY ID #:	30-26-17-0000-00400-0030
CURRENT ZONING:	C-1 (Neighborhood Commercial)
FUTURE LAND USE:	ROR
CURRENT USE:	Vacant
PROPOSED USE:	Restaurant - Commercial
GROSS FLOOR AREA:	4,395 SF
FLOOR AREA RATIO (FAR):	0.072 (4,395 SF/61,200 SF)
BUILDING HEIGHT:	23'-4" (35'-0" MAXIMUM)
FLOOD ZONE:	FLOOD ZONE "X"

PERVIOUS AREA (OPEN SPACE):
PER APPROVED CPD PERVIOUS AREA ALLOWED - 25.1% (15,361 SF)
PERVIOUS AREA PROVIDED: 22,775 SF (37.21%)

IMPERVIOUS AREA (BUILDING, SIDEWALKS, & PAVING):
PER APPROVED CPD PERVIOUS AREA ALLOWED - 74.9% (45,839 SF)
IMPERVIOUS AREA PROVIDED: 38,425 SF (62.79%)

TOTAL LAND AREA (PERVIOUS + IMPERVIOUS AREAS): 61,200 SF (100.00%)

LANDSCAPING INFORMATION:

BUFFER (ADJACENT TO R/W):	REQUIRED: 15'	PROVIDED: 15'
BUFFER (REAR PROPERTY):	REQUIRED: 15'	PROVIDED: 54'
BUFFER (SIDE PROPERTY):	REQUIRED: 10'	PROVIDED: 10'-15'

BUILDING SETBACKS:
FRONT: 25' SIDES: 0' REAR: 30'

2012 FLORIDA ACCESSIBILITY CODE

(A) ACCESSIBLE ROUTES: (CHAPTER 4 - SECTION 403)

The running slope of walking surfaces shall not be steeper than 1:20. The cross slope of walking surfaces shall not be steeper than 1:48.

The clear width of walking surfaces shall be 36 inches minimum. The clear width shall be permitted to be reduced to 32 inches minimum for a legth of 24 inches maximum provided that reduced width segments are separated by segments that are 48 inches long minimum and 36 inches wide minimum. Where the accessible route makes a 180 degree turn around an element which is less than 48 inches wide, clear width shall be 42 inches minimum approaching the turn, 48 inches minimum at the turn and 42 inches minimum leaving the turn. An accessible route with a clear width less than 60 inches shall provide passing spaces at intervals of 200 feet maximum. Passing spaces shall be at least 60 inches by 60 inches minimum.

(B) RAMPS: (CHAPTER 4 - SECTION 405)

Ramp runs shall have a running slope not steeper than 1:12. The cross slope of ramp runs shall not be steeper than 1:48. Changes in level other than the running slope and cross slope are not permitted on ramp runs.

The clear width of a ramp run and, where handrails are provided, the clear width between handrails shall be 36 inches minimum.

The rise for any ramp run shall be 30 inches maximum. Ramps shall have landings at the top and the bottom of each ramp run. Landings slopes shall not be steeper than 1:48. The landing clear width shall be at least as wide as the widest ramp run leading to the landing. The landing clear length shall be 60 inches long minimum. Ramps that change directions between runs at landings shall have a clear landing 60 inches by 60 inches minimum.

Ramp runs with a rise greater than 6 inches shall have handrails complying with Section 505. Edge protection shall be provided on each side of ramp runs and at each side of ramp landing complying with Section 405.9. The floor or ground surface of the ramp run or landing shall extend 12 inches minimum beyond the inside face of a handrail.

(C) CURB RAMPS: (CHAPTER 4 - SECTION 406)

Curb ramp runs shall have a running slope not steeper than 1:12. The cross slope of ramp runs shall not be steeper than 1:48. Counter slopes of adjoining gutters and road surfaces immediately adjacent to the curb ramp shall not be steeper than 1:20. The adjacent surfaces at transitions at curb ramps to walk, gutters, and streets shall be at the same level.

Where provided, curb ramp flares shall not be steeper than 1:10.

Landings shall be provided at the tops of curb ramps. The landing clear length shall be 36 inches minimum. The landing clear width shall be at least as wide as the curb ramp, excluding flared sides, leading to the landing. In alterations, where there is no landing at the top of curb ramps, curb ramp flares shall be provided and shall not be steeper than 1:12.

Curb ramps and the flared sides of curb ramps shall be located so that they do not project into vertical traffic lanes, parking spaces, or parking access aisles.

Raised islands in crossings shall be cut through level with the street or have curb ramps at both sides. Each curb ramp shall have a level area 48 inches long minimum by 36 inches wide minimum at the top of the curb ramp in the part of the island intersected by the crossing.

Detectable warning shall extend the full width of the curb ramp and shall extend either the full depth of the curb ramp or 24 inches deep minimum measured from the back of the curb on the ramp surface.

(D) PARKING SPACES: (CHAPTER 5 - SECTION 502)

Each parking space must be at least 12 feet wide, shall be marked to define the width, and shall have an adjacent access aisle. Access aisles shall adjoin an accessible route that is at least 44 inches wide so that users are not compelled to walk or wheel behind parked vehicles. Access aisles serving car and van parking spaces shall be 60 inches wide minimum. Two parking spaces shall be permitted to share a common access aisle. Access aisles shall extend the full length of the parking spaces they serve. The access aisles must be striped diagonally to designate it as a no-parking zone

Access aisles shall be at the same level as the parking spaces they serve and slopes shall not be steeper than 1:48 in all directions.

Each accessible parking space must be prominently outlined with blue striping to be clearly distinguishable as a parking space designated for persons who have disabilities and must be posted with a permanent above-grade sign bearing the international symbol of accessibility, meeting the requirements of color and design approved by the Department of Transportation and the caption "parking by disabled permit only". Posted signage shall also indicate the penalty for illegal use of the space per jurisdictional entity.

(E) DETECTABLE WARNINGS: (CHAPTER 7 - SECTION 705)

Detectable warnings shall consist of a surface of truncated domes and shall comply with section 705. Detectable warning surfaces shall contrast visually with adjacent walking surfaces either light-on-dark, or dark-on-light. Detectable warning surfaces at platform boarding edges shall be 24 inches wide and shall extend the full length of the public use area of the platform.

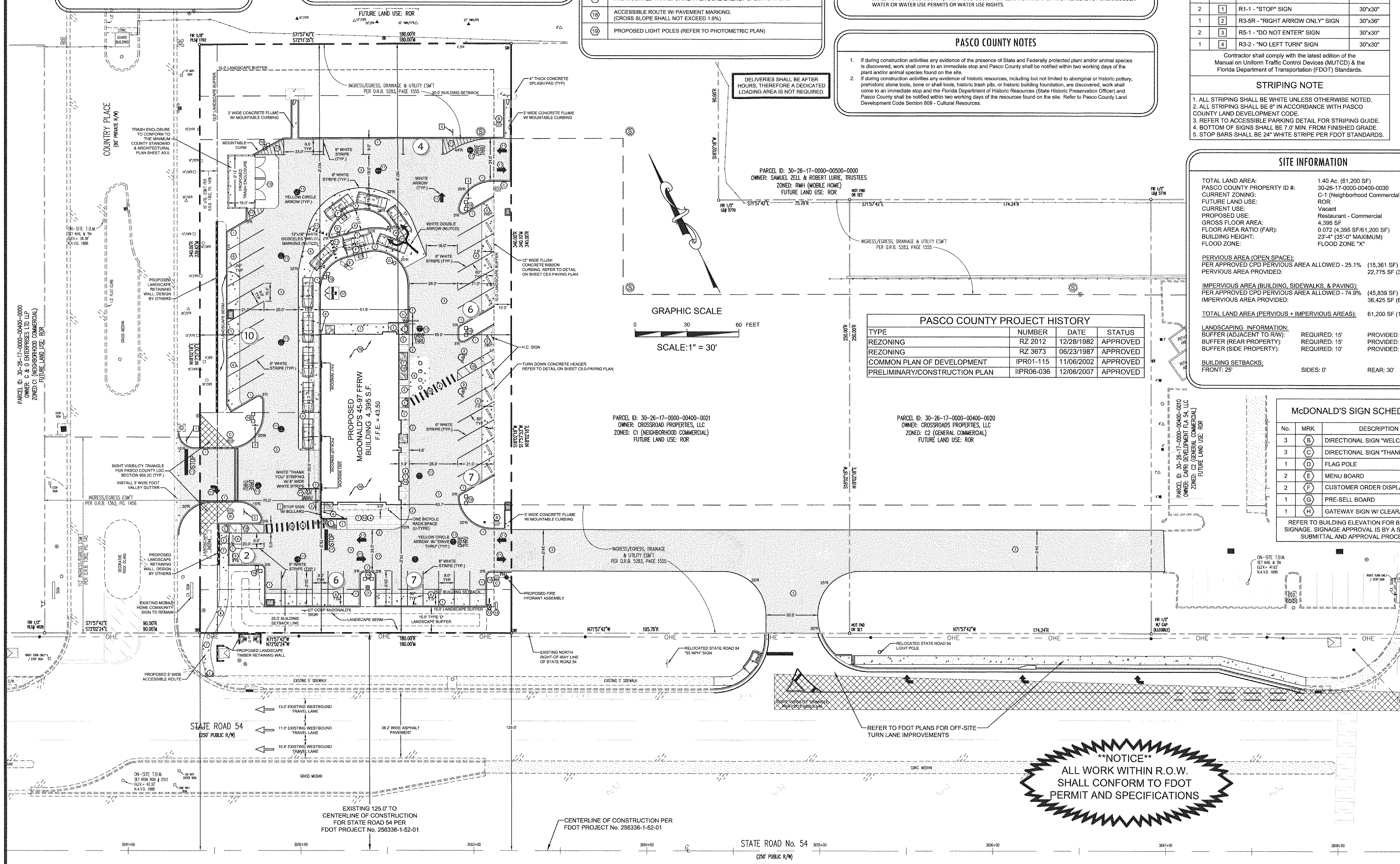

PASCO COUNTY PROJECT HISTORY

TYPE	NUMBER	DATE	STATUS
REZONING	RZ 2012	12/28/1982	APPROVED
REZONING	RZ 3673	06/23/1987	APPROVED
COMMON PLAN OF DEVELOPMENT	IPR01-115	11/06/2002	APPROVED
PRELIMINARY/CONSTRUCTION PLAN	IIPR06-036	12/06/2007	APPROVED

McDONALD'S SIGN SCHEDULE

No.	MRK.	DESCRIPTION
3	B	DIRECTIONAL SIGN "WELCOME"
3	C	DIRECTIONAL SIGN "THANK YOU"
1	D	FLAG POLE
2	E	MENU BOARD
2	F	CUSTOMER ORDER DISPLAY (COD)
1	G	PRE-SELL BOARD
1	H	GATEWAY SIGN W/ CLEARANCE BAR

REFER TO BUILDING ELEVATION FOR BUILDING SIGNAGE. SIGNAGE APPROVAL IS BY A SEPARATE SUBMITTAL AND APPROVAL PROCESS.

SURVEY INFORMATION

PREPARED BY:
GEORGE A. SHIMP II & ASSOC., INC
3301 DeSOTO BOULEVARD, SUITE D
PALM HARBOR, FLORIDA 34683
(727) 784-5496
DATE: JULY 2013

LEGAL DESCRIPTION:
A PORTION OF SECTION 30, TOWNSHIP 26 SOUTH, RANGE 17 EAST, PASCO COUNTY FLORIDA
McDONALD'S PARCEL CONTAINS 61,200 SQUARE FEET OR 1.40 ACRES, MORE OR LESS

PLAN SCALE: REFER TO GRAPHIC SCALE

ADDITION: McDONALD'S RESTAURANT
STREET ADDRESS: STATE ROAD 54 & COUNTRY PLACE
CITY: NEW PORT RICHEY STATE: FLORIDA
COUNTY: PASCO SURVEY: ---- ABSTRACT NO. ----
L/C NUMBER: 009/2550 CORPORATE DWG. NAME: SITE PLAN

REV	DATE	DESCRIPTION	BY	ISSUE REF
---	---	---	---	---
---	---	---	---	---
---	---	---	---	---
---	---	---	---	---

Adams
27524 Cashford Circle, Ste. 101 ■ Wesley Chapel, Florida 33544 ■ (813) 929-7499
FLORIDA COA# 27614

TIM D. HODES LICENSE No 67017 STATE OF FLORIDA PROFESSIONAL ENGINEER

OFFICE: FLORIDA REGION
ADDRESS: 10150 HIGHLAND MANOR DRIVE, SUITE 470; TAMPA, FLORIDA 33610

McDONALD'S®

THESE PLANS AND SPECIFICATIONS ARE THE PROPERTY OF McDONALD'S CORPORATION AND SHALL NOT BE REPRODUCED WITHOUT THEIR WRITTEN PERMISSION.

STATE ROAD 54 & COUNTRY PLACE
NEW PORT RICHEY, FLORIDA 34655
McDONALD'S L/C: 009/2550
ADAMS ENGINEERING No. 2013.049

PLAN APPROVALS — SIGNATURE (2 REQUIRED) / DATE: REGIONAL MGR., CONST. MGR., OPERATIONS DEPT., REAL ESTATE DEPT.
CO-SIGN SIGNATURES: CONTRACTOR, OWNER

STATUS	DATE	BY
DATE DRAWN	02/2014	EAO
PLAN CHECKED	02/2014	TDH
AS-BUILT		

C4.0

FULL PATH: I:_Projects\2013\2013.049_McD Trinity - Duck Slough\Drawings I:_Projects\2013\2013.049_McD Trinity - Duck Slough\Drawings\C4.0 SITE PLAN
PLOTTER: Adobe PDF PLOT TIME: 10:59:08 AM PLOT DATE: Friday, March 21, 2014 PLOTTED BY: Edgar Ortiz FILENAME: C4.0 SITE PLAN.dwg

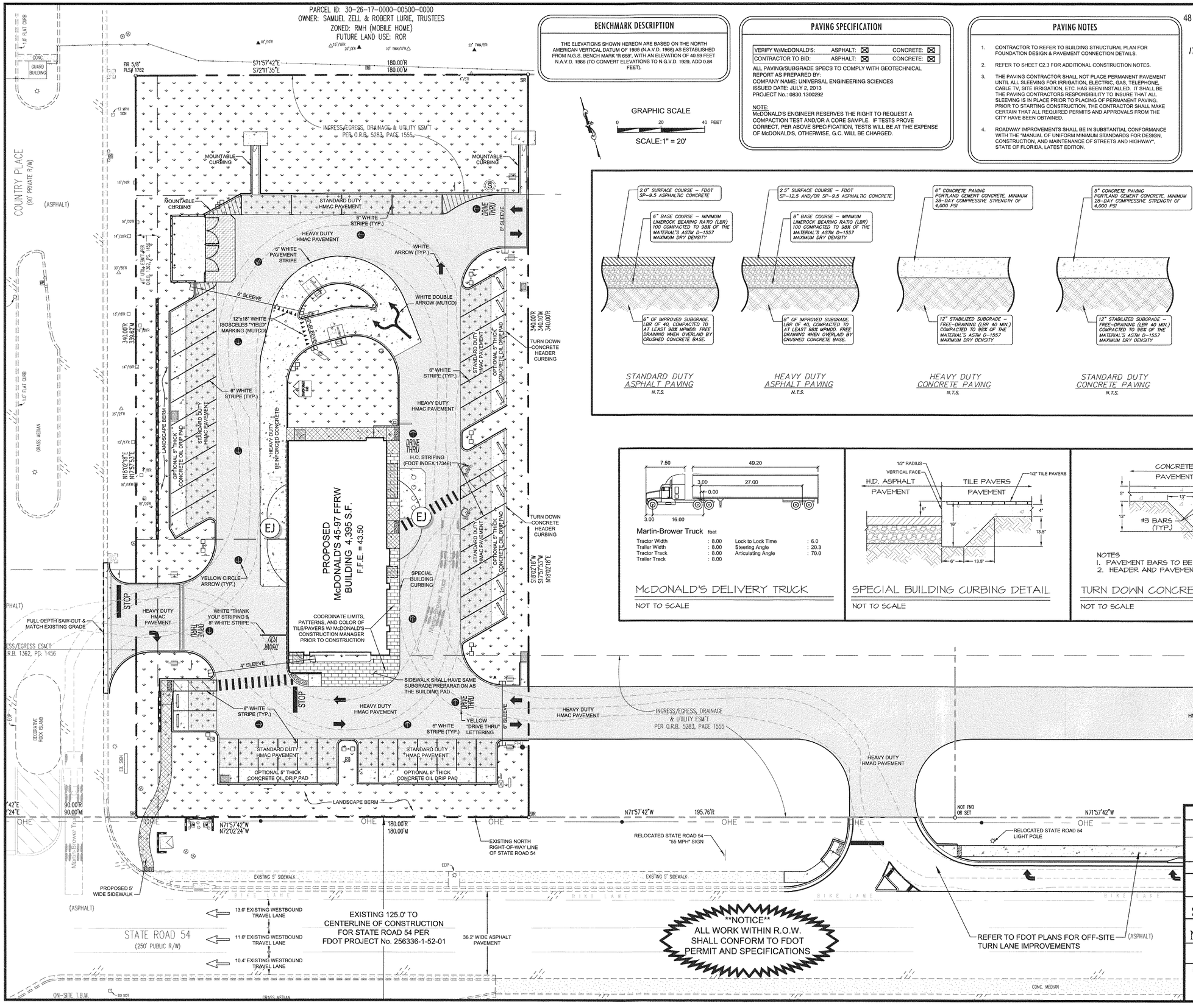

BENCHMARK DESCRIPTION

THE ELEVATIONS SHOWN HEREON ARE BASED ON THE NORTH AMERICAN VERTICAL DATUM OF 1988 (N.A.V.D. 1988) AS ESTABLISHED FROM N.G.S. BENCH MARK "R 895", WITH AN ELEVATION OF 40.89 FEET N.A.V.D. 1988 (TO CONVERT ELEVATIONS TO N.G.V.D. 1929, ADD 0.84 FEET).

GRAPHIC SCALE

0 20 40 FEET

SCALE:1" = 20'

PAVING SPECIFICATION

VERIFY W/McDONALD'S:	ASPHALT: ☒	CONCRETE: ☒
CONTRACTOR TO BID:	ASPHALT: ☒	CONCRETE: ☒

ALL PAVING/SUBGRADE SPECS TO COMPLY WITH GEOTECHNICAL REPORT AS PREPARED BY:
COMPANY NAME: UNIVERSAL ENGINEERING SCIENCES
ISSUED DATE: JULY 2, 2013
PROJECT No.: 0830.1300292

NOTE:
McDONALD'S ENGINEER RESERVES THE RIGHT TO REQUEST A COMPACTION TEST AND/OR A CORE SAMPLE. IF TESTS PROVE CORRECT, PER ABOVE SPECIFICATION, TESTS WILL BE AT THE EXPENSE OF McDONALD'S, OTHERWISE, G.C. WILL BE CHARGED.

PAVING NOTES

1. CONTRACTOR TO REFER TO BUILDING STRUCTURAL PLAN FOR FOUNDATION DESIGN & PAVEMENT CONNECTION DETAILS.
2. REFER TO SHEET C2.3 FOR ADDITIONAL CONSTRUCTION NOTES.
3. THE PAVING CONTRACTOR SHALL NOT PLACE PERMANENT PAVEMENT UNTIL ALL SLEEVING FOR IRRIGATION, ELECTRIC, GAS, TELEPHONE, CABLE TV, SITE IRRIGATION, ETC. HAS BEEN INSTALLED. IT SHALL BE THE PAVING CONTRACTORS RESPONSIBILITY TO INSURE THAT ALL SLEEVING IS IN PLACE PRIOR TO PLACING OF PERMANENT PAVING. PRIOR TO STARTING CONSTRUCTION, THE CONTRACTOR SHALL MAKE CERTAIN THAT ALL REQUIRED PERMITS AND APPROVALS FROM THE CITY HAVE BEEN OBTAINED.
4. ROADWAY IMPROVEMENTS SHALL BE IN SUBSTANTIAL CONFORMANCE WITH THE "MANUAL OF UNIFORM MINIMUM STANDARDS FOR DESIGN, CONSTRUCTION, AND MAINTENANCE OF STREETS AND HIGHWAY", STATE OF FLORIDA, LATEST EDITION.

48 HOURS BEFORE YOU DIG
CALL SUNSHINE
811
IT'S THE LAW IN FLORIDA

sunshine state ONE CALL of florida

PAVING LEGEND

- 4" THICK CONCRETE SIDEWALK
- 1/2" TILE PAVERS OVER 4" CONCRETE SIDEWALK
- 6" HEAVY-DUTY CONCRETE PAVEMENT WITH #3 BARS @ 24" O.C.E.W. OVER PREPARED SUBGRADE (OMIT STEEL @ DETECTOR LOOPS)
- DUMPSTER APRON 8" CONCRETE PAVEMENT WITH #3 BARS @ 24" O.C.E.W. OVER PREPARED SUBGRADE
- 2.5" HMAC PAVEMENT HEAVY DUTY PAVEMENT OVER PREPARED BASE / SUBGRADE
- 2.0" HMAC PAVEMENT STANDARD DUTY PAVEMENT OVER PREPARED BASE / SUBGRADE
- LANDSCAPE AREA REFER TO LANDSCAPE PLAN
- IRRIGATION SLEEVE W/ CAP (SCH. 40 P.V.C.)
- EJ — EXPANSION JOINTS WITH DOWELS AT LANDINGS/ STOOPS

ALL BASE, SUBGRADE, FLEXIBLE SURFACE COURSE, AND RIGID PAVEMENT (CONCRETE SURFACE) PREPARATION SHALL CONFORM TO THE RECOMMENDATIONS OF MATERIALS & CONSTRUCTION OF THE UNIVERSAL ENGINEERING SCIENCES GEOTECHNICAL REPORT (Project # 0830.1300292)

Martin-Brower Truck feet

Tractor Width	: 8.00	Lock to Lock Time	: 6.0
Trailer Width	: 8.00	Steering Angle	: 20.3
Tractor Track	: 8.00	Articulating Angle	: 70.0
Trailer Track	: 8.00		

McDONALD'S DELIVERY TRUCK

NOT TO SCALE

SPECIAL BUILDING CURBING DETAIL

NOT TO SCALE

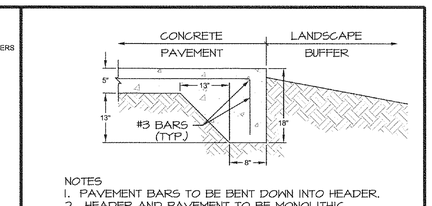

NOTES
1. PAVEMENT BARS TO BE BENT DOWN INTO HEADER.
2. HEADER AND PAVEMENT TO BE MONOLITHIC

TURN DOWN CONCRETE HEADER DETAIL

NOT TO SCALE

SURVEY INFORMATION

PREPARED BY:
GEORGE A. SHIMP II & ASSOC., INC
3301 DeSOTO BOULEVARD, SUITE D
PALM HARBOR, FLORIDA 34683
(727) 784-5496
DATE: JULY 2013

LEGAL DESCRIPTION:
A PORTION OF SECTION 30, TOWNSHIP 26 SOUTH, RANGE 17 EAST, PASCO COUNTY FLORIDA
McDONALD'S PARCEL CONTAINS 61,200 SQUARE FEET OR 1.40 ACRES, MORE OR LESS

PLAN SCALE: REFER TO GRAPHIC SCALE

ADDITION: McDONALD'S RESTAURANT

STREET ADDRESS: STATE ROAD 54 & COUNTRY PLACE

CITY: NEW PORT RICHEY — STATE: FLORIDA

COUNTY: PASCO — SURVEY: ---- — ABSTRACT NO.: ----

L/C NUMBER: 009/2550

CORPORATE DWG. NAME: PAVING PLAN

REV	DATE	DESCRIPTION	BY	ISSUE REF
---	---	---	---	---

Adams
2700 Cypress Ridge, Blvd., Ste. 101 ● Wesley Chapel, Florida 33544 ● (813) 782-1818
FLORIDA COA# 27944

TIMOTHY D. HOKES — LICENSED PROFESSIONAL ENGINEER — STATE OF FLORIDA

OFFICE: FLORIDA REGION
ADDRESS: 10150 HIGHLAND MANOR DRIVE, SUITE 470; TAMPA, FLORIDA 33610

McDONALD'S®
THESE PLANS AND SPECIFICATIONS ARE THE PROPERTY OF McDONALD'S CORPORATION AND SHALL NOT BE REPRODUCED WITHOUT THEIR WRITTEN PERMISSION

STATE ROAD 54 & COUNTRY PLACE
NEW PORT RICHEY, FLORIDA 34655

McDONALD'S L/C: 009/2550
ADAMS ENGINEERING No. 2013.049

PLAN APPROVALS — SIGNATURE (2 REQUIRED) — DATE
REGIONAL MGR. — CONST. MGR. — OPERATIONS DEPT. — REAL ESTATE DEPT.
CO-SIGN SIGNATURES — CONTRACTOR — OWNER

STATUS	DATE	BY
DATE DRAWN	02/2014	EAO
PLAN CHECKED	02/2014	TDH
AS-BUILT		

C5.0

PLOTTER: Adobe PDF
PLOT TIME: 11:07:59 AM
PLOT DATE: Friday, March 21, 2014
PLOTTED BY: Edgar Ortiz
FILENAME: C5.0 PAVING PLAN.dwg
FULL PATH: _Projects\2012\2013.049_McD Trinity - Duck Slough\Drawings\1_Projects\2012\2013.049_McD Trinity - Duck Slough\Drawings\C2.3 PAVING PLAN

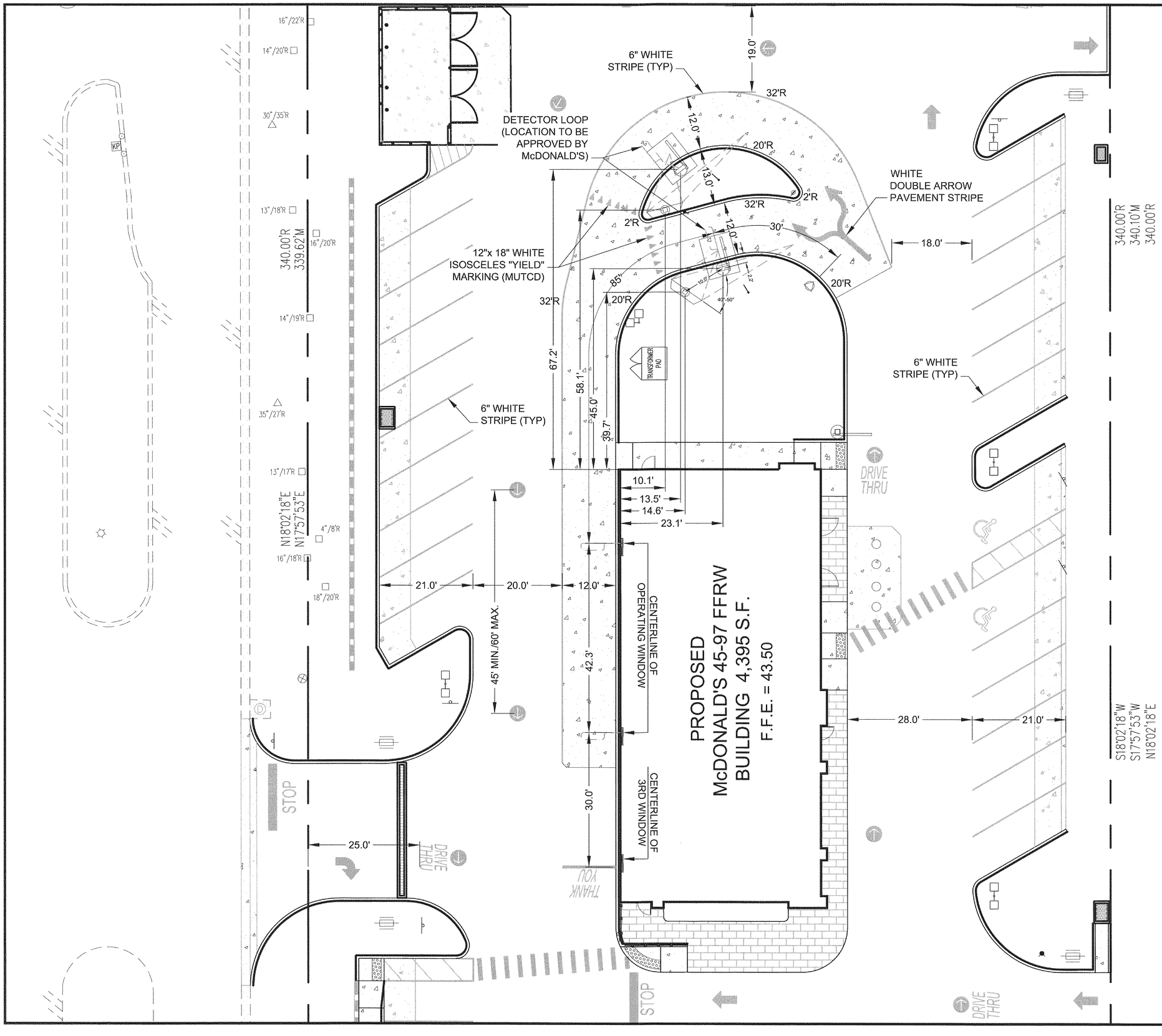

48 HOURS BEFORE YOU DIG
CALL SUNSHINE
811
IT'S THE LAW IN FLORIDA

sunshine state ONE CALL of florida

GRAPHIC SCALE

0 10 20 FEET

SCALE:1" = 10'

PAVING NOTES

1. REFER TO SHEET C2.3 FOR ADDITIONAL CONSTRUCTION NOTES.
2. THE PAVING CONTRACTOR SHALL NOT PLACE PERMANENT PAVEMENT UNTIL ALL SLEEVING FOR IRRIGATION, ELECTRIC, GAS, TELEPHONE, CABLE TV, SITE IRRIGATION, ETC. HAS BEEN INSTALLED. IT SHALL BE THE PAVING CONTRACTORS RESPONSIBILITY TO INSURE THAT ALL SLEEVING IS IN PLACE PRIOR TO PLACING OF PERMANENT PAVING. PRIOR TO STARTING CONSTRUCTION, THE CONTRACTOR SHALL MAKE CERTAIN THAT ALL REQUIRED PERMITS AND APPROVALS FROM THE CITY HAVE BEEN OBTAINED.
3. PRIOR TO MENU BOARDS, ORDER POINTS, AND CONCRETE PAVING, CONTRACTOR SHALL STAKE OUT AND SET FORM BOARDS & MEET WITH McDONALD'S AREA CONSTRUCTION MANAGER FOR APPROVAL. McDONALD'S AREA CONSTRUCTION MANAGER RESERVES THE RIGHT TO MAKE FIELD ADJUSTMENTS.

McDONALD'S SYMBOL LEGEND

- WELCOME GATEWAY SIGN WITH A "9' MAXIMUM CLEARANCE" BAR ATTACHED TO SIGN.
- MENU BOARD WITH VISIBILITY TRIANGLE
- CUSTOMER ORDER DISPLAY WITH CANOPY AND DETECTOR LOOP
- PRE-SELL BOARD
- "ANY LANE-ANY TIME" BOLLARD
- "PLEASE HAVE YOUR ORDER READY" BOLLARD (OPTIONAL)

SURVEY INFORMATION

PREPARED BY:
GEORGE A. SHIMP II & ASSOC., INC
3301 DeSOTO BOULEVARD, SUITE D
PALM HARBOR, FLORIDA 34683
(727) 784-5496
DATE: JULY 2013

LEGAL DESCRIPTION:
A PORTION OF SECTION 30, TOWNSHIP 26 SOUTH, RANGE 17 EAST, PASCO COUNTY FLORIDA
McDONALD'S PARCEL CONTAINS
61,206 SQUARE FEET OR 1.40 ACRES, MORE OR LESS

PLAN SCALE: REFER TO GRAPHIC SCALE

ADDITION: McDONALD'S RESTAURANT

STREET ADDRESS: STATE ROAD 54 & COUNTRY PLACE

CITY: NEW PORT RICHEY | STATE: FLORIDA

COUNTY: PASCO | SURVEY: ---- | ABSTRACT NO.: ----

L/C NUMBER: 009/2550

CORPORATE DWG. NAME: DRIVE-THRU CONTROL PLAN

REV	DATE	DESCRIPTION	BY	ISSUE REF
---	---	---	---	---

Adams
2700 CORPORATE DRIVE, SUITE B • WESLEY CHAPEL, FLORIDA 33544 • (813) 779-7999
FLORIDA COA # 27644

TIMOTHY D. HODGES, LICENSED PROFESSIONAL ENGINEER, No. 67017, STATE OF FLORIDA

McDONALD'S®

OFFICE: FLORIDA REGION
ADDRESS: 10150 HIGHLAND MANOR DRIVE, SUITE 470, TAMPA, FLORIDA 33610

THESE PLANS AND SPECIFICATIONS ARE THE PROPERTY OF McDONALD'S CORPORATION AND SHALL NOT BE REPRODUCED WITHOUT THEIR WRITTEN PERMISSION.

McDONALD'S L/C: 009/2550
ADAMS ENGINEERING No. 2013.049

STATE ROAD 54 & COUNTRY PLACE
NEW PORT RICHEY, FLORIDA 34655

PLAN APPROVALS — SIGNATURE (2 REQUIRED) — DATE
REGIONAL MGR.
CONST. MGR.
OPERATIONS DEPT.
REAL ESTATE DEPT.

CO-SIGN SIGNATURES
CONTRACTOR
OWNER

STATUS	DATE	BY
DATE DRAWN	02/2014	EAO
PLAN CHECKED	02/2014	TDH
AS-BUILT		

C5.1

FULL PATH: I:_Projects\2013\2013.049_McD Tinsley - Duck Slough\Drawings\1_Plans\2013.049 - Duck Slough - Drive-Thru Control Plan.dwg
PLOTTER: Adobe PDF
PLOT TIME: 11:05:15 AM
PLOT DATE: Tuesday, March 18, 2014
PLOTTED BY: Edgar Ortiz
FILENAME: C5.1 DRIVE-THRU CONTROL PLAN.dwg

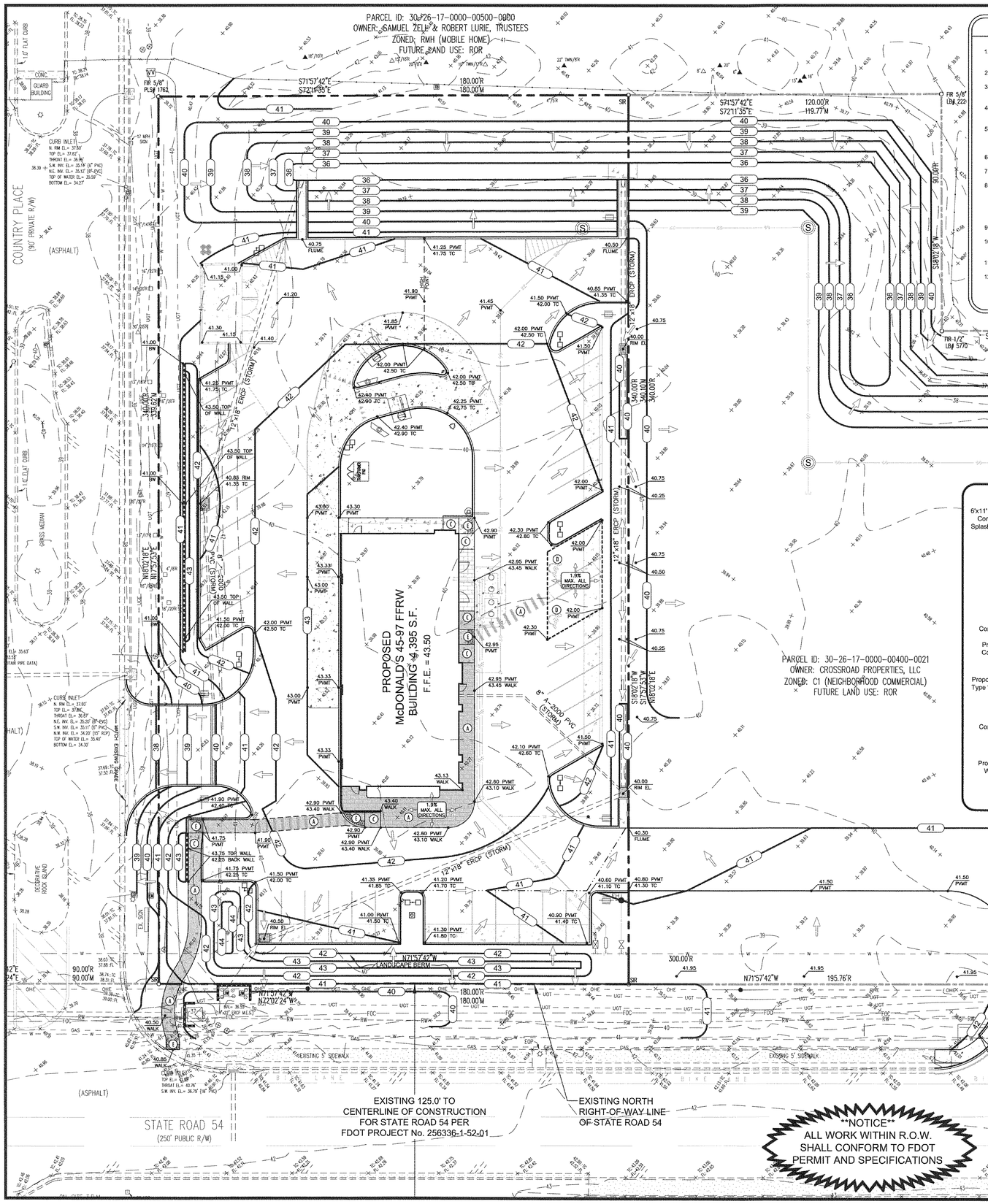

*** CONSTRUCTION NOTES ***

1. THE EARTHWORK FOR ALL BUILDING FOUNDATIONS AND SLABS SHALL BE IN ACCORDANCE WITH ARCHITECTURAL BUILDING PLANS AND SPECIFICATIONS.
2. ADJUST PAVEMENT AND/OR CURB ELEVATIONS AS NECESSARY TO ASSURE AS SMOOTH FIT AND CONTINUOUS GRADE WITH EXISTING.
3. CONTRACTOR IS RESPONSIBLE FOR VERIFYING ALL UTILITIES AND NOTIFYING THE APPROPRIATE UTILITY COMPANY PRIOR TO BEGINNING CONSTRUCTION.
4. CONTRACTOR SHALL VERIFY HORIZONTAL AND VERTICAL LOCATION OF ALL EXISTING STORM SEWER STRUCTURES, PIPES, AND ALL UTILITIES PRIOR TO CONSTRUCTION.
5. CONTRACTOR IS RESPONSIBLE FOR REPAIRS OF DAMAGE TO ANY EXISTING IMPROVEMENTS DURING CONSTRUCTION, SUCH AS BUT NOT LIMITED TO DRAINAGE, UTILITIES, PAVEMENT, STRIPING, CURBS, ETC. REPAIRS SHALL BE EQUAL TO OR BETTER THAN EXISTING CONDITIONS.
6. PROPOSED SPOT GRADES SHOWN ARE TO TOP OF PAVEMENT UNLESS OTHERWISE NOTED.
7. EXISTING AND PROPOSED GRADE CONTOUR INTERVALS SHOWN AT ONE FOOT (1')
8. ALL UN-SURFACED AREAS DISTURBED BY GRADING OPERATION SHALL RECEIVE FOUR (4) INCHES OF TOPSOIL. CONTRACTOR SHALL APPLY STABILIZATION FABRIC TO ALL SLOPES 3H:1V OR STEEPER. CONTRACTOR SHALL GRASS DISTURBED AREAS IN ACCORDANCE WITH STANDARD SPECIFICATIONS UNTIL A HEALTHY STAND OF GRASS IS OBTAINED.
9. FOR LOCATION OF ALL UTILITY ENTRANCES, SEE ARCHITECTURAL PLANS AND SPECIFICATIONS.
10. CONTRACTOR SHALL COORDINATE WITH ARCHITECTURAL PLANS, POWER COMPANY, TELEPHONE COMPANY & GAS COMPANY FOR ACTUAL ROUTING OF POWER AND SERVICES TO BUILDING.
11. CONSTRUCTION SHALL COMPLY WITH ALL GOVERNING CODES AND BE CONSTRUCTED TO SAME.
12. AFTER PERMITS HAVE BEEN OBTAINED & EROSION CONTROL MEASURES INSTALLED, THE CONTRACTOR SHALL GRADE BUILDING PAD TO 0 TO -1/2" OF SUBGRADE.

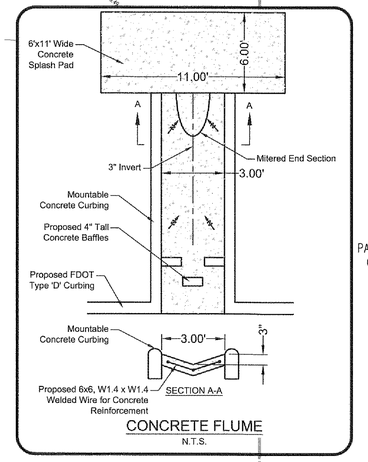

CONCRETE FLUME
N.T.S.

2012 FLORIDA ACCESSIBILITY CODE

(A) ACCESSIBLE ROUTES: (CHAPTER 4 - SECTION 403)

The running slope of walking surfaces shall not be steeper than 1:20. The cross slope of walking surfaces shall not be steeper than 1:48.

The clear width of walking surfaces shall be 36 inches minimum. The clear width shall be permitted to be reduced to 32 inches minimum for a length of 24 inches maximum provided that reduced width segments are separated by segments that are 48 inches long minimum and 36 inches wide minimum. Where the accessible route makes a 180 degree turn around an element which is less than 48 inches wide, clear width shall be 42 inches minimum approaching the turn, 48 inches minimum at the turn and 42 inches minimum leaving the turn. An accessible route with a clear width less than 60 inches shall provide passing spaces at intervals of 200 feet maximum. Passing spaces shall be at least 60 inches by 60 inches minimum.

(B) RAMPS: (CHAPTER 4 - SECTION 405)

Ramp runs shall have a running slope not steeper than 1:12. The cross slope of ramp runs shall not be steeper than 1:48. Changes in level either than the running slope and cross slope are not permitted on ramp runs.

The clear width of a ramp run and, where handrails are provided, the clear width between handrails shall be 36 inches minimum.

The rise for any ramp run shall be 30 inches maximum. Ramps shall have landings at the top and the bottom of each ramp run. Landings slopes shall not be steeper than 1:48. The landing clear width shall be at least as wide as the widest ramp run leading to the landing. The landing clear length shall be 60 inches long minimum. Ramps that change directions between runs at landings shall have a clear landing 60 inches by 60 inches minimum.

Ramp runs with a rise greater than 6 inches shall have handrails complying with Section 505. Edge protection shall be provided on each side of ramp runs and at each side of ramp landing complying with Section 405.9. The floor or ground surface of the ramp run or landing shall extend 12 inches minimum beyond the inside face of a handrail.

(C) CURB RAMPS: (CHAPTER 4 - SECTION 406)

Curb ramp runs shall have a running slope not steeper than 1:12. The cross slope of ramp runs shall not be steeper than 1:48. Counter slopes of adjoining gutters and road surfaces immediately adjacent to the curb ramp shall not be steeper than 1:20. The adjacent surfaces at transitions at curb ramps to walk, gutters, and streets shall be at the same level.

Where provided, curb ramp flares shall not be steeper than 1:10.

Landings shall be provided at the tops of curb ramps. The landing clear length shall be 36 inches minimum. The landing clear width shall be at least as wide as the curb ramp, excluding flared sides, leading to the landing. In alterations, where there is no landing at the top of curb ramps, curb ramp flares shall be provided and shall not be steeper than 1:12.

Curb ramps and the flared sides of curb ramps shall be located so that they do not project into vertical traffic lanes, parking spaces, or parking access aisles.

Raised islands in crossings shall be cut through level with the street or have curb ramps at both sides. Each curb ramp shall have a level area 48 inches long minimum by 36 inches wide minimum at the top of the curb ramp in the part of the island intersected by the crossing.

Detectable warning shall extend the full width of the curb ramp and shall extend either the full depth of the curb ramp or 24 inches deep minimum measured from the back of the curb on the ramp surface.

(D) PARKING SPACES: (CHAPTER 5 - SECTION 502)

Each parking space must be at least 12 feet wide, shall be marked to define the width, and shall have an adjacent access aisle. Access aisles shall adjoin an accessible route that is at least 44 inches wide so that users are not compelled to walk or wheel behind parked vehicles. Access aisles serving car and van parking spaces shall be 60 inches wide minimum. Two parking spaces shall be permitted to share a common access aisle. Access aisles shall extend the full length of the parking spaces they serve. The access aisles must be striped diagonally to designate it as a no-parking zone

Access aisles shall be at the same level as the parking spaces they serve and slopes shall not be steeper than 1:48 in all directions.

Each accessible parking space must be prominently outlined with blue striping to be clearly distinguishable as a parking space designated for persons who have disabilities and must be posted with a permanent above-grade sign bearing the international symbol of accessibility, meeting the requirements of color and design approved by the Department of Transportation and the caption "parking by disabled permit only". Posted signage shall also indicate the penalty for illegal use of the space per jurisdictional entity.

(E) DETECTABLE WARNINGS: (CHAPTER 7 - SECTION 705)

Detectable warnings shall consist of a surface of truncated domes and shall comply with section 705. Detectable warning surfaces shall contrast visually with adjacent walking surfaces either light-on-dark, or dark-on-light. Detectable warning surfaces at platform boarding edges shall be 24 inches wide and shall extend the full length of the public use area of the platform.

48 HOURS BEFORE YOU DIG
CALL SUNSHINE
811
IT'S THE LAW IN FLORIDA

sunshine state ONE CALL of florida

GRAPHIC SCALE
0 20 40 FEET
SCALE: 1"=20'

SITE LEGEND

TC = PROPOSED TOP OF CURB ELEVATION
GUT = PROPOSED GUTTER ELEVATION
BW = PROPOSED BOTTOM OF WALL ELEVATION
FL = PROPOSED FLOW LINE
PVMT = PROPOSED PAVEMENT ELEVATION
FFE = PROPOSED FINISHED FLOOR ELEVATION

- SWALE OR GRADE BREAK
- RIDGE LINE (HIGH POINT)
- 40 EXISTING CONTOUR
- 40 PROPOSED CONTOUR
- PROPOSED FLOW ARROWS
- 40.00 EXISTING SPOT GRADES
- 39.00 PVMT / 39.50 TC PROPOSED SPOT GRADES
- (A) PROPOSED ADA ACCESSIBLE ROUTE

BENCHMARK DESCRIPTION

THE ELEVATIONS SHOWN HEREON ARE BASED ON THE NORTH AMERICAN VERTICAL DATUM OF 1988 (N.A.V.D. 1988) AS ESTABLISHED FROM N.G.S. BENCH MARK "R 668", WITH AN ELEVATION OF 40.89 FEET N.A.V.D. 1988 (TO CONVERT ELEVATIONS TO N.G.V.D. 1929, ADD 0.84 FEET).

** FEMA NOTE **

Flood Statement: According to Community Panel No. 1202300360D, Dated SEPTEMBER 30, 1992, of the Federal Emergency Management Agency, National Flood Insurance Program Map, this property is within flood zone "X", which is not a special flood hazard area. If this site is not within an identified special flood hazard area, this flood statement does not imply that the property and/or the structures thereon will be free from flooding or flood damage. On rare occasions, greater floods can and will occur and flood heights may be increased by man-made or natural causes. This statement shall not create liability on the part of the Surveyor or Engineer.

REV	DATE	DESCRIPTION	BY	ISSUE REF
----	----	----	----	----
----	----	----	----	----
----	----	----	----	----
----	----	----	----	----
----	----	----	----	----

Adams
2330 Gulfport Circle, Ste. 104 ■ Wesley Chapel, FL ■ (813) 294-4 ■ (813) 929-1849

FLORIDA COA# 27944

WILLIAM D. HODES
LICENSE
No. 67017
STATE OF FLORIDA
PROFESSIONAL ENGINEER

OFFICE: FLORIDA REGION
ADDRESS: 10150 HIGHLAND MANOR DRIVE, SUITE 470; TAMPA, FLORIDA 33610

McDONALD'S®

THESE PLANS AND SPECIFICATIONS ARE THE PROPERTY OF MCDONALD'S CORPORATION AND SHALL NOT BE REPRODUCED WITHOUT THEIR WRITTEN PERMISSION.

STATE ROAD 54 & COUNTRY PLACE
NEW PORT RICHEY, FLORIDA 34655

MCDONALD'S L/C: 009/2550
ADAMS ENGINEERING No. 2013.049

PLAN APPROVALS

SIGNATURE (2 REQUIRED)	DATE
REGIONAL MGR.	
CONST. MGR.	
OPERATIONS DEPT.	
REAL ESTATE DEPT.	
CONTRACTOR:	
OWNER:	

CO-SIGN SIGNATURES

SURVEY INFORMATION

PREPARED BY:
GEORGE A. SHIMP II & ASSOC., INC
3301 DeSOTO BOULEVARD, SUITE D
PALM HARBOR, FLORIDA 34683
(727) 784-5496
DATE: JULY 2013

LEGAL DESCRIPTION:
A PORTION OF SECTION 30, TOWNSHIP 26 SOUTH, RANGE 17 EAST, PASCO COUNTY FLORIDA
McDONALD'S PARCEL CONTAINS
61,200 SQUARE FEET OR 1.40 ACRES, MORE OR LESS

PLAN SCALE: REFER TO GRAPHIC SCALE

ADDITION
McDONALD'S RESTAURANT

STREET ADDRESS
STATE ROAD 54 & COUNTRY PLACE

CITY: NEW PORT RICHEY
STATE: FLORIDA
COUNTY: PASCO
SURVEY: ----
ABSTRACT NO.: ----
L/C NUMBER: 009/2550
CORPORATE DWG. NAME: GRADING PLAN

STATUS	DATE	BY
DATE DRAWN	02/2014	EAO
PLAN CHECKED	02/2014	TDH
AS-BUILT		

C6.0

FULL PATH: I:_Projects\2013\2013.049_McD Trinity - Duck Slough\Drawings\13_Grading\13.03 GRADING PLAN
PLOTTER: Adobe PDF
PLOT TIME: 11:09:05 AM
PLOT DATE: Friday, March 21, 2014
PLOTTED BY: Edgar Ortiz
FILENAME: C6.0-GRADING PLAN.dwg

Land Use	Area (sf)	Area (acres)	CN	CN*A
McDonald's Building	4,395	0.101	98	430,710
McDonald's Parking and Sidewalks	34,030	0.781	90	3,062,700
McDonald's Open Space	22,775	0.523	75	1,708,125
Crossland Remainder Impervious	10,224	0.235	90	920,160
Crossland Remainder Open Space	93,063	2.136	75	6,979,725
Total	164,487	3.776		13,101,420
Post Development Composite CN			79.7	

48 HOURS BEFORE YOU DIG CALL SUNSHINE 811 IT'S THE LAW IN FLORIDA — sunshine state ONE CALL of florida

BENCHMARK DESCRIPTION

THE ELEVATIONS SHOWN HEREON ARE BASED ON THE NORTH AMERICAN VERTICAL DATUM OF 1988 (N.A.V.D. 1988) AS ESTABLISHED FROM N.G.S. BENCH MARK "R 666", WITH AN ELEVATION OF 40.89 FEET N.A.V.D. 1988 (TO CONVERT ELEVATIONS TO N.G.V.D. 1929, ADD 0.84 FEET).

PROJECT'S DRAINAGE NARRATIVE

THE PROPOSED PROJECT WILL CONSIST OF A NEW MCDONALD'S RESTAURANT TO BE BUILT AT THE NORTHEAST CORNER OF STATE ROAD 54 AND COUNTRY PLACE IN NEW PORT RICHEY FLORIDA. THE PROPOSED BUILDING WILL BE 4,395 SF WITH APPROXIMATELY 66 SEATS, ALONG WITH ITS SITE DEVELOPMENT FEATURES, INCLUDING BUT NOT LIMITED TO REQUIRED PARKING, VEHICULAR/PEDESTRIAN ACCESS, VEHICLE USE AREAS, AND UTILITIES.

** FEMA NOTE **

Flood Statement: According to Community Panel No. 1202300360D, Dated SEPTEMBER 30, 1992, of the Federal Emergency Management Agency, National Flood Insurance Program Map, this property is within flood zone "X", which is not a special flood hazard area. If this site is not within an identified special flood hazard area, this flood statement does not imply that the property and/or the structures thereon will be free from flooding or flood damage. On rare occasions, greater floods can and will occur and flood heights may be increased by man-made or natural causes. This statement shall not create liability on the part of the Surveyor or Engineer.

GRAPHIC SCALE 0 20 40 FEET

SCALE:1" = 20'

SITE LEGEND

- 40 — EXISTING CONTOUR
- 40 — PROPOSED CONTOUR
- EXISTING FLOW ARROWS
- PROPOSED FLOW ARROWS

PARCEL ID: 30-26-17-0000-00500-0000
OWNER: SAMUEL ZELL & ROBERT LURIE, TRUSTEES
ZONED: RMH (MOBILE HOME)
FUTURE LAND USE: ROR

STRUCTURE-5
PROPOSED MODIFIED FDOT 4:1 ERCP SIDE DRAIN MITERED END SECTION WITHIN 3' WIDE CONCRETE FLUME & MOUNTABLE CURBING WITH 6'x11' CONCRETE SPLASH PAD PER FDOT INDEX 273
12"x18" ERCP INV. EL. = 36.00'

STRUCTURE-1
PROPOSED MODIFIED FDOT 4:1 ERCP SIDE DRAIN MITERED END SECTION WITHIN 3' WIDE CONCRETE FLUME & MOUNTABLE CURBING WITH 6'x11' CONCRETE SPLASH PAD PER FDOT INDEX 273
12"x18" ERCP INV. EL. = 36.00'

UTILITY CROSSING
12"x18" ERCP STORM INV. EL. = 36.08' +/-
12"x18" ERCP STORM BOTTOM EL. = 35.87' +/-
8" PVC SANITARY INV. EL. = 34.78' +/-
8" PVC SANITARY TOP EL. = 35.49' +/-
CONTRACTOR TO CONCRETE ENCASE SANITARY SEWER LINE 12' EACH SIDE.

STRUCTURE-2
PROPOSED FDOT TYPE "C" DITCH BOTTOM INLET WITH GALV. STEEL GRATE (USF 6606)
GRATE EL.=40.00'
12"x18" INV. EL.= 36.26'

UTILITY CROSSING
CONTRACTOR TO MAINTAIN 24" CLEARANCE BETWEEN WATER AND STORM SEWER

STRUCTURE-6
PROPOSED FDOT TYPE "F" DITCH BOTTOM INLET WITH GALV. HEAVY-DUTY STEEL GRATE (USF 6631)
GRATE EL.=40.85'
12"x18" INV. EL.=36.52' (N)
8" INV. EL.=36.60' (S)

EXISTING STORMWATER MANAGEMENT POND
WEST PASCO INDUSTRIAL PARK
PER ERP # 44000300.003
DATED 6/25/2002

PROPOSED McDONALD'S 45-97 FFRW BUILDING 4,395 S.F.
F.F.E. = 43.50

PROPOSED 8" (A-2000) PVC ROOF DRAIN CONNECTION. INV. EL. = 40.00 (REFER TO PLUMBING PLAN)

PARCEL ID: 30-26-17-0000-00400-0021
OWNER: CROSSROAD PROPERTIES, LLC
ZONED: C1 (NEIGHBORHOOD COMMERCIAL)
FUTURE LAND USE: ROR

STRUCTURE-3
PROPOSED FDOT TYPE "F" DITCH BOTTOM INLET WITH GALV. HEAVY-DUTY STEEL GRATE (USF 6631)
GRATE EL.=40.00'
12"x18" INV. EL.=36.94' (N)
8" INV. EL.=37.00' (NW)
12"x18" INV. EL.=36.94' (SW)

UTILITY CROSSING
CONTRACTOR TO MAINTAIN 24" CLEARANCE BETWEEN WATER AND STORM SEWER

STRUCTURE-4
PROPOSED FDOT TYPE "F" DITCH BOTTOM INLET WITH GALV. HEAVY-DUTY STEEL GRATE (USF 6631)
GRATE EL.=40.50'
12"x18" INV. EL.=37.54' (E)

STRUCTURE-7
Proposed Cast-In-Place Trench Drain w/ Cast Iron Grates (NEENAH R-4990-BX Type A Grate)
Grate El.= 39.90
N. INV. EL. = 37.90
S. INV. EL. = 38.90
Refer to Trench Detail

CAUTION
EXISTING UTILITIES IN THE VICINITY - USE CAUTION!

THIS PARCEL WAS PREVIOUSLY PERMITTED BUT NOT CONSTRUCTED UNDER PROJECT NAMED CROSSLAND COMMERCIAL PLAZA (ERP # 44000300.032)

PARCEL ID: 30-26-17-0000-00400-0010
OWNER: CAPRI DEVELOPMENT FLA 54, LLC
ZONED: C2 (GENERAL COMMERCIAL)

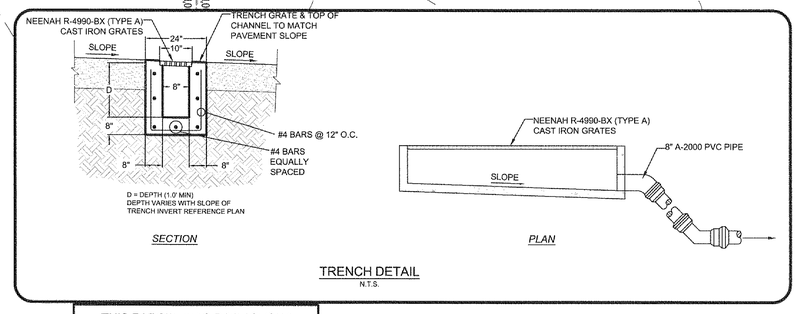

TRENCH DETAIL
N.T.S.

STATE ROAD 54
(250' PUBLIC R/W)

COUNTRY PLACE
(90' PRIVATE R/W)

SURVEY INFORMATION

PREPARED BY:
GEORGE A. SHIMP II & ASSOC., INC
3301 DeSOTO BOULEVARD, SUITE D
PALM HARBOR, FLORIDA 34683
(727) 784-5496
DATE: JULY 2013

LEGAL DESCRIPTION:
A PORTION OF SECTION 30, TOWNSHIP 26 SOUTH, RANGE 17 EAST, PASCO COUNTY FLORIDA
McDONALD'S PARCEL CONTAINS 61,200 SQUARE FEET OR 1.40 ACRES, MORE OR LESS

PLAN SCALE: REFER TO GRAPHIC SCALE

ADDITION: McDONALD'S RESTAURANT

STREET ADDRESS: STATE ROAD 54 & COUNTRY PLACE

CITY: NEW PORT RICHEY — STATE: FLORIDA

COUNTY:	SURVEY:	ABSTRACT NO.
PASCO	----	----

L/C NUMBER: 009/2550 — CORPORATE DWG. NAME: STORMWATER MANAGEMENT PLAN

REV	DATE	DESCRIPTION	BY	ISSUE REF
---	---	---	---	---

Adams — 2201 Gateway Drive, Ste. 104 ■ Wesley Chapel, Florida 33544 ■ (813) 779-7444 — FLORIDA COA # 27844

McDONALD'S — THESE PLANS AND SPECIFICATIONS ARE THE PROPERTY OF McDONALD'S CORPORATION AND SHALL NOT BE REPRODUCED WITHOUT THEIR WRITTEN PERMISSION.

OFFICE: FLORIDA REGION
ADDRESS: 10150 HIGHLAND MANOR DRIVE, SUITE 470; TAMPA, FLORIDA 33610

McDONALD'S L/C: 009/2550
ADAMS ENGINEERING No. 2013.049

STATE ROAD 54 & COUNTRY PLACE
NEW PORT RICHEY, FLORIDA 34655

PLAN APPROVALS — SIGNATURE (2 REQUIRED) — DATE

CO-SIGN SIGNATURES: REGIONAL MGR. / CONST. MGR. / OPERATIONS DEPT. / REAL ESTATE DEPT. / CONTRACTOR / OWNER

STATUS	DATE	BY
DATE DRAWN	02/2014	EAO
PLAN CHECKED	02/2014	TDH
AS-BUILT		

C7.0

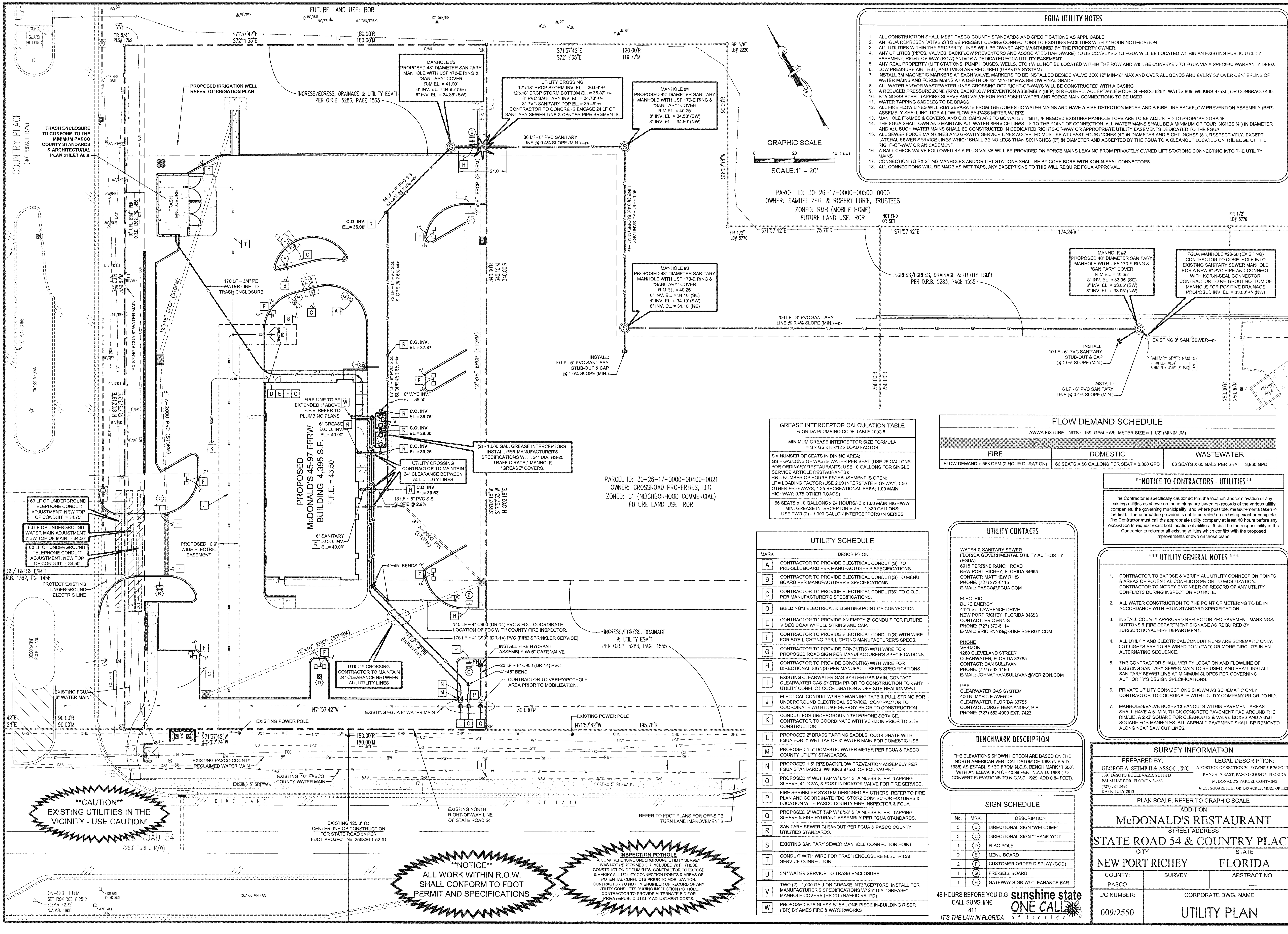

FGUA UTILITY NOTES

1. ALL CONSTRUCTION SHALL MEET PASCO COUNTY STANDARDS AND SPECIFICATIONS AS APPLICABLE.
2. AN FGUA REPRESENTATIVE IS TO BE PRESENT DURING CONNECTIONS TO EXISTING FACILITIES WITH 72 HOUR NOTIFICATION.
3. ALL UTILITIES WITHIN THE PROPERTY LINES WILL BE OWNED AND MAINTAINED BY THE PROPERTY OWNER.
4. ANY UTILITIES (PIPES, VALVES, BACKFLOW PREVENTORS AND ASSOCIATED HARDWARE) TO BE CONVEYED TO FGUA WILL BE LOCATED WITHIN AN EXISTING PUBLIC UTILITY EASEMENT, RIGHT-OF-WAY (ROW) AND/OR A DEDICATED FGUA UTILITY EASEMENT.
5. ANY REAL PROPERTY (LIFT STATIONS, PUMP HOUSES, WELLS, ETC.) WILL NOT BE LOCATED WITHIN THE ROW AND WILL BE CONVEYED TO FGUA VIA A SPECIFIC WARRANTY DEED.
6. LOW PRESSURE AIR TEST, AND TVING ARE REQUIRED (GRAVITY SYSTEM).
7. INSTALL 3M MAGNETIC MARKERS AT EACH VALVE. MARKERS TO BE INSTALLED BESIDE VALVE BOX 12" MIN-18" MAX AND OVER ALL BENDS AND EVERY 50' OVER CENTERLINE OF WATER MAINS AND FORCE MAINS AT A DEPTH OF 12" MIN-18" MAX BELOW FINAL GRADE.
8. ALL WATER AND/OR WASTEWATER LINES CROSSING DOT RIGHT-OF-WAYS WILL BE CONSTRUCTED WITH A CASING
9. A REDUCED PRESSURE ZONE (RPZ), BACKFLOW PREVENTION ASSEMBLY (BFP) IS REQUIRED. ACCEPTABLE MODELS FEBCO 825Y, WATTS 909, WILKINS 975XL, OR CONBRACO 400.
10. STAINLESS STEEL TAPPING SLEEVE AND VALVE FOR PROPOSED WATER AND FORCE MAIN CONNECTIONS TO BE USED.
11. WATER TAPPING SADDLES TO BE BRASS
12. ALL FIRE FLOW LINES WILL RUN SEPARATE FROM THE DOMESTIC WATER MAINS AND HAVE A FIRE DETECTION METER AND A FIRE LINE BACKFLOW PREVENTION ASSEMBLY (BFP) ASSEMBLY SHALL INCLUDE A LOW FLOW BY-PASS METER W/ RPZ
13. MANHOLE FRAMES & COVERS, AND C.O. CAPS ARE TO BE WATER TIGHT, IF NEEDED EXISTING MANHOLE TOPS ARE TO BE ADJUSTED TO PROPOSED GRADE
14. THE FGUA SHALL OWN AND MAINTAIN ALL WATER SERVICE LINES UP TO THE POINT OF CONNECTION. ALL WATER MAINS SHALL BE A MINIMUM OF FOUR INCHES (4") IN DIAMETER AND ALL SUCH WATER MAINS SHALL BE CONSTRUCTED IN DEDICATED RIGHTS-OF-WAY OR APPROPRIATE UTILITY EASEMENTS DEDICATED TO THE FGUA.
15. ALL SEWER FORCE MAIN LINES AND GRAVITY SERVICE LINES ACCEPTED MUST BE AT LEAST FOUR INCHES (4") IN DIAMETER AND EIGHT INCHES (8"), RESPECTIVELY, EXCEPT LATERAL SEWER SERVICE LINES WHICH SHALL BE NO LESS THAN SIX INCHES (6") IN DIAMETER AND ACCEPTED BY THE FGUA TO A CLEANOUT LOCATED ON THE EDGE OF THE RIGHT-OF-WAY OR AN EASEMENT.
16. A BALL CHECK VALVE FOLLOWED BY A PLUG VALVE WILL BE PROVIDED ON FORCE MAINS LEAVING FROM PRIVATELY OWNED LIFT STATIONS CONNECTING INTO THE UTILITY MAINS
17. CONNECTION TO EXISTING MANHOLES AND/OR LIFT STATIONS SHALL BE BY CORE BORE WITH KOR-N-SEAL CONNECTORS.
18. ALL CONNECTIONS WILL BE MADE AS WET TAPS. ANY EXCEPTIONS TO THIS WILL REQUIRE FGUA APPROVAL.

GREASE INTERCEPTOR CALCULATION TABLE

FLORIDA PLUMBING CODE TABLE 1003.5.1

MINIMUM GREASE INTERCEPTOR SIZE FORMULA
= S x GS x HR/12 x LOAD FACTOR

S = NUMBER OF SEATS IN DINING AREA;
GS = GALLONS OF WASTE WATER PER SEAT (USE 25 GALLONS FOR ORDINARY RESTAURANTS; USE 10 GALLONS FOR SINGLE SERVICE ARTICLE RESTAURANTS);
HR = NUMBER OF HOURS ESTABLISHMENT IS OPEN;
LF = LOADING FACTOR (USE 2.00 INTERSTATE HIGHWAY; 1.50 OTHER FREEWAYS; 1.25 RECREATIONAL AREA; 1.00 MAIN HIGHWAY; 0.75 OTHER ROADS)

66 SEATS x 10 GALLONS x 24 HOURS/12 x 1.00 MAIN HIGHWAY
MIN. GREASE INTERCEPTOR SIZE = 1,320 GALLONS;
USE TWO (2) - 1,000 GALLON INTERCEPTORS IN SERIES

FLOW DEMAND SCHEDULE

AWWA FIXTURE UNITS = 169; GPM = 58; METER SIZE = 1-1/2" (MINIMUM)

FIRE	DOMESTIC	WASTEWATER
FLOW DEMAND = 563 GPM (2 HOUR DURATION)	66 SEATS X 50 GALLONS PER SEAT = 3,300 GPD	66 SEATS X 60 GALS PER SEAT = 3,960 GPD

NOTICE TO CONTRACTORS - UTILITIES

The Contractor is specifically cautioned that the location and/or elevation of any existing utilities as shown on these plans are based on records of the various utility companies, the governing municipality, and where possible, measurements taken in the field. The information provided is not to be relied on as being exact or complete. The Contractor must call the appropriate utility company at least 48 hours before any excavation to request exact field location of utilities. It shall be the responsibility of the Contractor to relocate all existing utilities which conflict with the proposed improvements shown on these plans.

UTILITY SCHEDULE

MARK	DESCRIPTION
A	CONTRACTOR TO PROVIDE ELECTRICAL CONDUIT(S) TO PRE-SELL BOARD PER MANUFACTURER'S SPECIFICATIONS.
B	CONTRACTOR TO PROVIDE ELECTRICAL CONDUIT(S) TO MENU BOARD PER MANUFACTURER'S SPECIFICATIONS.
C	CONTRACTOR TO PROVIDE ELECTRICAL CONDUIT(S) TO C.O.D. PER MANUFACTURER'S SPECIFICATIONS.
D	BUILDING'S ELECTRICAL & LIGHTING POINT OF CONNECTION.
E	CONTRACTOR TO PROVIDE AN EMPTY 2" CONDUIT FOR FUTURE VIDEO COAX W/ PULL STRING AND CAP.
F	CONTRACTOR TO PROVIDE ELECTRICAL CONDUIT(S) WITH WIRE FOR SITE LIGHTING PER LIGHTING MANUFACTURER'S SPECS.
G	CONTRACTOR TO PROVIDE CONDUIT(S) WITH WIRE FOR PROPOSED ROAD SIGN PER MANUFACTURER'S SPECIFICATIONS.
H	CONTRACTOR TO PROVIDE CONDUIT(S) WITH WIRE FOR DIRECTIONAL SIGN(S) PER MANUFACTURER'S SPECIFICATIONS.
I	EXISTING CLEARWATER GAS SYSTEM GAS MAIN. CONTACT CLEARWATER GAS SYSTEM PRIOR TO CONSTRUCTION FOR ANY UTILITY CONFLICT COORDINATION & OFF-SITE REALIGNMENT.
J	ELECTICAL CONDUIT W/ RED WARNING TAPE & PULL STRING FOR UNDERGROUND ELECTRICAL SERVICE. CONTRACTOR TO COORDINATE WITH DUKE ENERGY PRIOR TO CONSTRUCTION.
K	CONDUIT FOR UNDERGROUND TELEPHONE SERVICE. CONTRACTOR TO COORDINATE WITH VERIZON PRIOR TO SITE CONSTRUCTION.
L	PROPOSED 2" BRASS TAPPING SADDLE. COORDINATE WITH FGUA FOR 2" WET TAP OF 8" WATER MAIN FOR DOMESTIC USE.
M	PROPOSED 1.5" DOMESTIC WATER METER PER FGUA & PASCO COUNTY UTILITY STANDARDS.
N	PROPOSED 1.5" RPZ BACKFLOW PREVENTION ASSEMBLY PER FGUA STANDARDS. WILKINS 975XL OR EQUIVALENT.
O	PROPOSED 4" WET TAP W/ 8"x4" STAINLESS STEEL TAPPING SLEEVE, 4" DCVA, & POST INDICATOR VALVE FOR FIRE SERVICE.
P	FIRE SPRINKLER SYSTEM DESIGNED BY OTHERS. REFER TO FIRE PLAN AND COORDINATE FDC, STORZ CONNECTOR FIXTURES & LOCATION WITH PASCO COUNTY FIRE INSPECTOR & FGUA.
Q	PROPOSED 6" WET TAP W/ 8"x6" STAINLESS STEEL TAPPING SLEEVE & FIRE HYDRANT ASSEMBLY PER FGUA STANDARDS.
R	SANITARY SEWER CLEANOUT PER FGUA & PASCO COUNTY UTILITIES STANDARDS.
S	EXISTING SANITARY SEWER MANHOLE CONNECTION POINT
T	CONDUIT WITH WIRE FOR TRASH ENCLOSURE ELECTRICAL SERVICE CONNECTION.
U	3/4" WATER SERVICE TO TRASH ENCLOSURE
V	TWO (2) - 1,000 GALLON GREASE INTERCEPTORS. INSTALL PER MANUFACTURER'S SPECIFICATIONS W/ 24" DIA. "GREASE" MANHOLE COVERS (HS-20 TRAFFIC RATED)
W	PROPOSED STAINLESS STEEL ONE PIECE IN-BUILDING RISER (IBR) BY AMES FIRE & WATERWORKS

UTILITY CONTACTS

WATER & SANITARY SEWER
FLORIDA GOVERNMENTAL UTILITY AUTHORITY (FGUA)
6915 PERRINE RANCH ROAD
NEW PORT RICHEY, FLORIDA 34655
CONTACT: MATTHEW RIHS
PHONE: (727) 372-0115
E-MAIL: PASCO@FGUA.COM

ELECTRIC
DUKE ENERGY
4121 ST. LAWRENCE DRIVE
NEW PORT RICHEY, FLORIDA 34653
CONTACT: ERIC ENNIS
PHONE: (727) 372-5114
E-MAIL: ERIC.ENNIS@DUKE-ENERGY.COM

PHONE
VERIZON
1280 CLEVELAND STREET
CLEARWATER, FLORIDA 33755
CONTACT: DAN SULLIVAN
PHONE: (727) 562-1190
E-MAIL: JOHNATHAN.SULLIVAN@VERIZON.COM

GAS
CLEARWATER GAS SYSTEM
400 N. MYRTLE AVENUE
CLEARWATER, FLORIDA 33755
CONTACT: JORGE HERNANDEZ, P.E.
PHONE: (727) 562-4900 EXT. 7423

*** UTILITY GENERAL NOTES ***

1. CONTRACTOR TO EXPOSE & VERIFY ALL UTILITY CONNECTION POINTS & AREAS OF POTENTIAL CONFLICTS PRIOR TO MOBILIZATION. CONTRACTOR TO NOTIFY ENGINEER OF RECORD OF ANY UTILITY CONFLICTS DURING INSPECTION POTHOLE.
2. ALL WATER CONSTRUCTION TO THE POINT OF METERING TO BE IN ACCORDANCE WITH FGUA STANDARD SPECIFICATION.
3. INSTALL COUNTY APPROVED REFLECTORIZED PAVEMENT MARKINGS/ BUTTONS & FIRE DEPARTMENT SIGNAGE AS REQUIRED BY JURISDICTIONAL FIRE DEPARTMENT.
4. ALL UTILITY AND ELECTRICAL/CONDUIT RUNS ARE SCHEMATIC ONLY. LOT LIGHTS ARE TO BE WIRED TO 2 (TWO) OR MORE CIRCUITS IN AN ALTERNATING SEQUENCE.
5. THE CONTRACTOR SHALL VERIFY LOCATION AND FLOWLINE OF EXISTING SANITARY SEWER MAIN TO BE USED, AND SHALL INSTALL SANITARY SEWER LINE AT MINIMUM SLOPES PER GOVERNING AUTHORITY'S DESIGN SPECIFICATIONS.
6. PRIVATE UTILITY CONNECTIONS SHOWN AS SCHEMATIC ONLY. CONTRACTOR TO COORDINATE WITH UTILITY COMPANY PRIOR TO BID.
7. MANHOLES/VALVE BOXES/CLEANOUTS WITHIN PAVEMENT AREAS SHALL HAVE A 6" MIN. THICK CONCRETE PAVEMENT PAD AROUND THE RIM/LID. A 2'x2' SQUARE FOR CLEANOUTS & VALVE BOXES AND A 6'x6' SQUARE FOR MANHOLES. ALL ASPHALT PAVEMENT SHALL BE REMOVED ALONG NEAT SAW CUT LINES.

BENCHMARK DESCRIPTION

THE ELEVATIONS SHOWN HEREON ARE BASED ON THE NORTH AMERICAN VERTICAL DATUM OF 1988 (N.A.V.D. 1988) AS ESTABLISHED FROM N.G.S. BENCH MARK "R 668", WITH AN ELEVATION OF 40.89 FEET N.A.V.D. 1988 (TO CONVERT ELEVATIONS TO N.G.V.D. 1929, ADD 0.84 FEET).

SIGN SCHEDULE

No.	MRK.	DESCRIPTION
3	B	DIRECTIONAL SIGN "WELCOME"
3	C	DIRECTIONAL SIGN "THANK YOU"
1	D	FLAG POLE
2	E	MENU BOARD
2	F	CUSTOMER ORDER DISPLAY (COD)
1	G	PRE-SELL BOARD
1	H	GATEWAY SIGN W/ CLEARANCE BAR

48 HOURS BEFORE YOU DIG
CALL SUNSHINE
811
IT'S THE LAW IN FLORIDA

sunshine state ONE CALL of florida

SURVEY INFORMATION

PREPARED BY:
GEORGE A. SHIMP II & ASSOC., INC
3301 DeSOTO BOULEVARD, SUITE D
PALM HARBOR, FLORIDA 34683
(727) 784-5496
DATE: JULY 2013

LEGAL DESCRIPTION:
A PORTION OF SECTION 30, TOWNSHIP 26 SOUTH, RANGE 17 EAST, PASCO COUNTY FLORIDA
McDONALD'S PARCEL CONTAINS 61,200 SQUARE FEET OR 1.40 ACRES, MORE OR LESS

PLAN SCALE: REFER TO GRAPHIC SCALE

ADDITION
McDONALD'S RESTAURANT

STREET ADDRESS
STATE ROAD 54 & COUNTRY PLACE

CITY	STATE
NEW PORT RICHEY	FLORIDA

COUNTY:	SURVEY:	ABSTRACT NO.
PASCO	----	----

L/C NUMBER:	CORPORATE DWG. NAME
009/2550	UTILITY PLAN

REV	DATE	DESCRIPTION	BY	ISSUE REF
---	---	---	---	---
---	---	---	---	---
---	---	---	---	---
---	---	---	---	---

Adams
27324 Cashford Circle, Ste. 101 ■ Wesley Chapel, Florida 33544 ■ (813) 929-7499
FLORIDA COA# 27614

TIM D. HODES LICENSE No 67017 STATE OF FLORIDA PROFESSIONAL ENGINEER

OFFICE: FLORIDA REGION
ADDRESS: 10150 HIGHLAND MANOR DRIVE, SUITE 470; TAMPA, FLORIDA 33610

McDONALD'S®

THESE PLANS AND SPECIFICATIONS ARE THE PROPERTY OF McDONALD'S CORPORATION AND SHALL NOT BE REPRODUCED WITHOUT THEIR WRITTEN PERMISSION.

STATE ROAD 54 & COUNTRY PLACE
NEW PORT RICHEY, FLORIDA 34655
McDONALD'S L/C: 009/2550
ADAMS ENGINEERING No. 2013.049

PLAN APPROVALS

SIGNATURE (2 REQUIRED)	DATE
REGIONAL MGR.	
CONST. MGR.	
OPERATIONS DEPT.	
REAL ESTATE DEPT.	

CO-SIGN SIGNATURES

CONTRACTOR	
OWNER	

STATUS	DATE	BY
DATE DRAWN	02/2014	EAO
PLAN CHECKED	02/2014	TDH
AS-BUILT		

C8.0

FULL PATH: t:_Projects\2013\2013.049_McD Trinity - Duck Slough\Drawings\1_Projects\2013\2013.049_McD Trinity - Duck Slough\Drawings\C8.0 UTILITY PLAN
PLOTTER: Adobe PDF
PLOT TIME: 11:12:35 AM
PLOT DATE: Friday, March 21, 2014
PLOTTED BY: Edgar Ortiz
FILENAME: C8.0 UTILITY PLAN.dwg

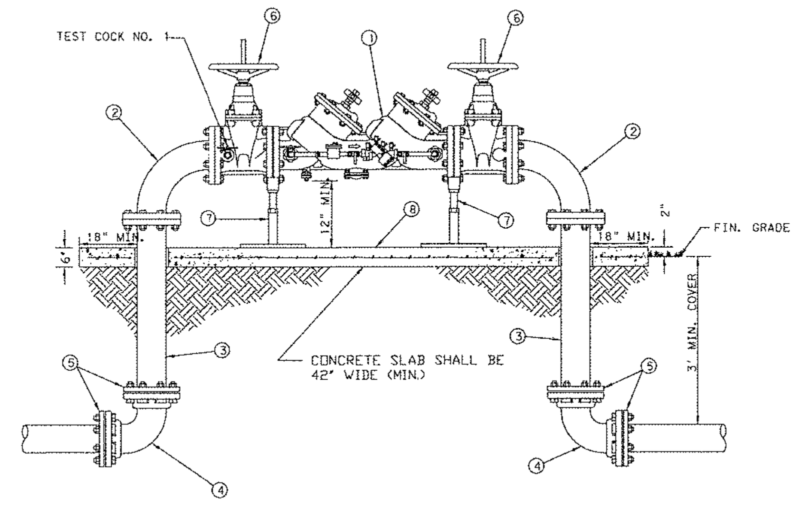

M A T E R I A L S		
ITEM	QUANT.	DESCRIPTION
1	1	3", 4", 6", 8" DOUBLE CHECK VALVE/BFP ASSEMBLY WITH DETECTOR ASSEMBLY
2	2	3", 4", 6", 8" BEND, 90°/M FLANGE x FLANGE
3	2	3", 4", 6", 8" SPOOL PIECE FLG. x PE. D.I.P.
4	2	3", 4", 6", 8" BEND, 90°/M M.J. x M.J.
5	4	3", 4", 6", 8" GLAND, RETAINER M.J. (MEGALUG)
6	2	3", 4", 6", 8" VALVE, GATE FLG. x FLG. RESILIENT WEDGE O.S. & Y.
7	2	SUPPORT (AS NEEDED)
8	1	CONCRETE SLAB (6" THICK - 42" WIDE MIN.)

NOTE:
- NO TIE RODS OR EYE BOLT RETAINERS PERMITTED ABOVE GROUND.
- B.F.P. ASSEMBLY TO BE INSTALLED LEVEL & PLUMB.
- MINIMUM CLEARANCE OF 36" TO BE MAINTAINED AROUND ENTIRE DEVICE FOR TESTING
- ENTIRE ASSEMBLY TO BE PAINTED SAFETY BLUE.
- DETECTOR BY-PASS ASSEMBLY TO BE FACTORY INSTALLED AND CERTIFIED
- ALL MECHANICAL JOINTS SHALL BE RESTRAINED WITH MEGALUGS OR APPROVED EQUAL
- BELL JOINT RESTRAINERS SHALL BE PROVIDED ON ALL UNDERGROUND PIPING AS SPECIFIED IN JOINT RESTRAINT TABLE DETAIL
- ALL ABOVE GROUND PIPING SHALL BE FLANGED DUCTILE IRON PIPE (NO GALVANIZED OR PVC)
- ITEM 3 SHALL BE FIELD CUT TO PROPER LENGTH TO ACHIEVE DESIGNATGED GROUND CLEARANCE
- IF SO SPECIFIED, ENTIRE ASSEMBLY TO BE ENCLOSED IN 6' CHAIN LINK FENCE.
- BFP DEVICE MUST BE LISTED WITH THE UNIVERSITY OF SOUTHERN CALIFORNIA FOUNDATION FOR CROSS CONNECTION CONTORL AND HYDRAULIC RESEARCH.

CREATED 02/24/03
REVISED

DOUBLE DETECTOR CHECK VALVE ASSEMBLY/BACKFLOW PREVENTER (SINGLE SERVICE: 3", 4", 6", 8", 10")

PROVIDED FOR INFORMATIONAL PURPOSES ONLY. NO MODIFICATIONS WITHOUT WRITTEN PCU APPROVAL

PASCO COUNTY UTILITIES — DETAIL 10

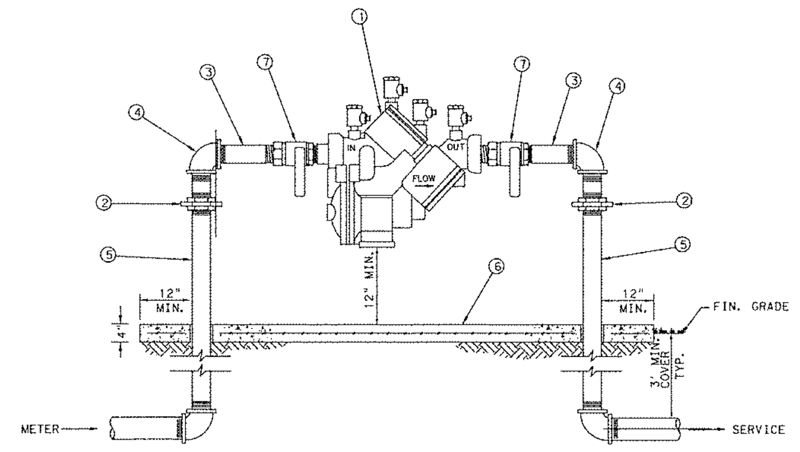

M A T E R I A L S		
ITEM	QUANT.	DESCRIPTION
1	1	BACKFLOW PREVENTER ASSEMBLY, REDUCED PRESSURE ZONE
2	2	UNIONS - GALV.
3	2	NIPPLES - BRASS
4	2	ELBOWS - GALV. 90°/M
5	2	RISER - GALV.
6	*	CONCRETE SLAB
7	2	BALL VALVES - BRASS OR S.S. (PROVIDED WITH BFP ASS'Y)

NOTE:
- FIELD ADJUST AND CUT ITEM 5 TO THE PROPER LENGTH.
- MINIMUM CLEARANCE OF 24" TO BE MAINTAINED AROUND DEVICE FOR TESTING.
- ENTIRE ASSEMBLY TO BE PAINTED SAFETY BLUE.
- CONCRETE SLAB TO EXTEND 12" MIN. AROUND ENTIRE DEVICE.
- DEVICE MUST BE LISTED WITH THE UNIVERSITY OF SOUTHERN CALIFORNIA FOUNDATION FOR CROSS CONNECTION CONTROL AND HYDRAULIC RESEARCH.

CREATED 02/24/03
REVISED

REDUCED PRESSURE BACKFLOW PREVENTER (SINGLE SERVICE: 3/4", 1", 1-1/2", 2")

PROVIDED FOR INFORMATIONAL PURPOSES ONLY. NO MODIFICATIONS WITHOUT WRITTEN PCU APPROVAL

PASCO COUNTY UTILITIES — DETAIL 12

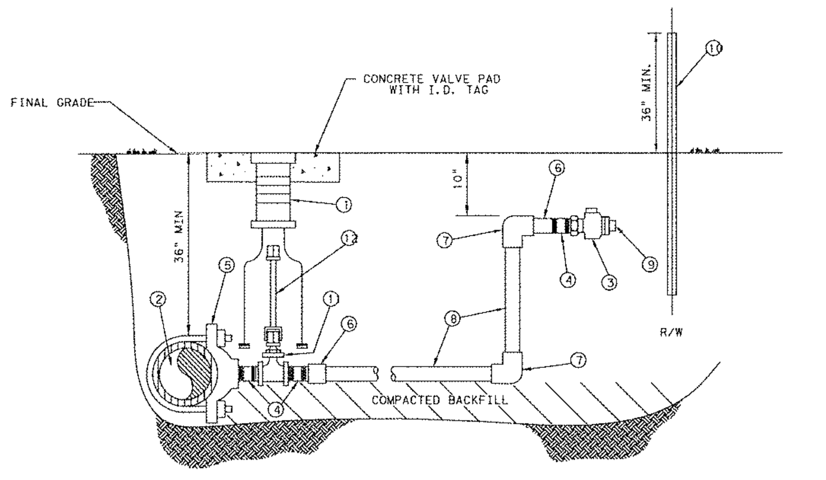

M A T E R I A L S		
ITEM	QUANT.	DESCRIPTION
1	1	BOX, VALVE CAST IRON SLIP TYPE
2	*	4" & LARGER PIPE, PVC (DR-18) OR D.I.P. (CLASS 50)
3	2	1 1/2", 2" CURB STOP BALL VALVE W/ LOCK WINGS (FIP x FIP OR FIP x CTS)
4	3	1 1/2", 2" NIPPLE, BRASS OR STAINLESS STEEL
5	1	1 1/2", 2" SADDLE, SERVICE (I.P. THREADS)
6	2	1 1/2", 2" ADAPTER (PVC SCH 40 / SLIP x FPT OR BRASS MIP x CTS)
7	2	1 1/2", 2" 90°/M ELBOW (SLIP x SLIP) SCH 40 (NOT REQUIRED FOR HDPE)
8	*	1 1/2", 2" PIPE, PVC (SCH 40) OR HDPE (3408) - LENGTH VARIES
9	1	1 1/2", 2" PLUG, THREADED (W/ TEFLON TAPE)
10	1	2" x 4" P.T. MARKER STAKE
11	1	2" GATE VALVE, IRON BODY W/ SQUARE NUT
12	1	VALVE EXTENSION ROD, AS REQUIRED (3' MAX. BELOW GRADE)

NOTE:
- A VALVE BOX SHALL BE REQUIRED ON ALL GATE VALVES.
- SERVICE SADDLES SHALL BE INSTALLED ON ALL TAPS TO P.V.C. (DR-18) WATER MAINS.
- 2" GATE VALVE TO BE RESILIENT WEDGE IRON BODY TYPE WITH 2" OPERATING UNIT.
- SADDLES 4" AND LARGER TO BE DUCTILE IRON DUAL STRAP TYPE.
- 1 1/2" BRASS REDUCER BUSHING REQUIRED WITH ITEM NO. 11 FOR 1 1/2" SERVICE.
- MARKER STAKES PAINTED SAFETY BLUE FOR WATER, PURPLE FOR REUSE.
- 4" DIAMETER CASING REQUIRED FOR ROAD CROSSINGS

CREATED 02/24/03
REVISED

WATER AND REUSE LATERAL SERVICE 1 1/2" OR 2" SERVICE LATERAL PVC (SCHEDULE 40)

PROVIDED FOR INFORMATIONAL PURPOSES ONLY. NO MODIFICATIONS WITHOUT WRITTEN PCU APPROVAL

PASCO COUNTY UTILITIES — DETAIL 21

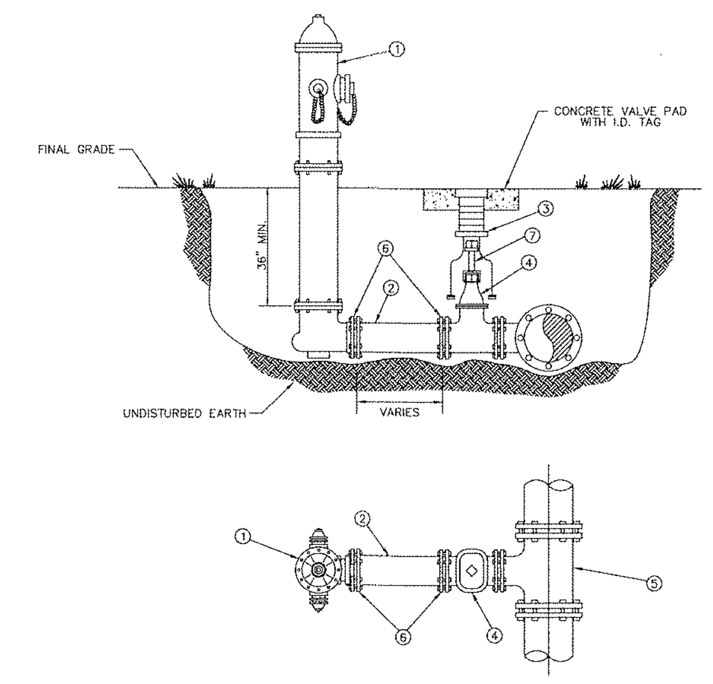

M A T E R I A L S		
ITEM	QUANT.	DESCRIPTION
1	1	HYDRANT, FIRE (5 1/4" VALVE MIN.), PAINTED YELLOW
2	*	6" PIPE, P.V.C. (DR-18)
3	1	BOX, VALVE SLIP TYPE
4	1	6" VALVE, GATE, M.J. RESILIENT WEDGE
5	1	TEE, ANCHORING, M.J.
6	*	6" RESTRAINER GLAND (MEGALUG)
7	*	VALVE EXTENSION ROD, AS NECESSARY (3' MAX. BELOW GRADE)

CREATED 02/24/03
REVISED

FIRE HYDRANT PERPENDICULAR TO THE MAIN

PROVIDED FOR INFORMATIONAL PURPOSES ONLY. NO MODIFICATIONS WITHOUT WRITTEN PCU APPROVAL

PASCO COUNTY UTILITIES — DETAIL 27

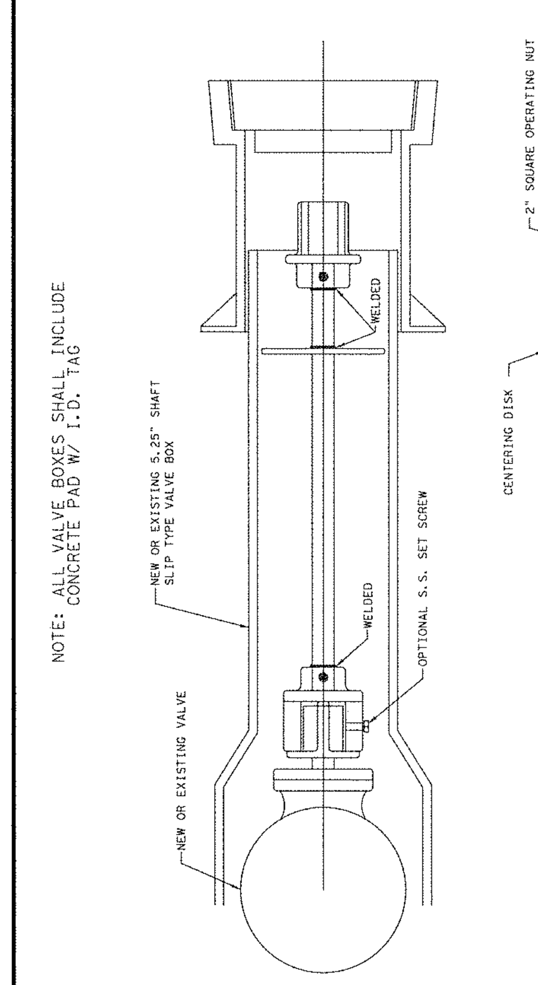

CREATED 02/24/03
REVISED

VALVE EXTENSION RODS

PROVIDED FOR INFORMATIONAL PURPOSES ONLY. NO MODIFICATIONS WITHOUT WRITTEN PCU APPROVAL

PASCO COUNTY UTILITIES — DETAIL 29

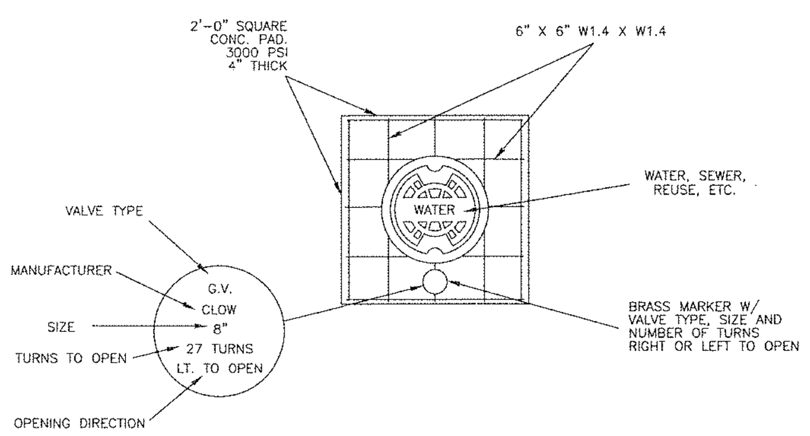

TYPICAL CONCRETE VALVE PAD

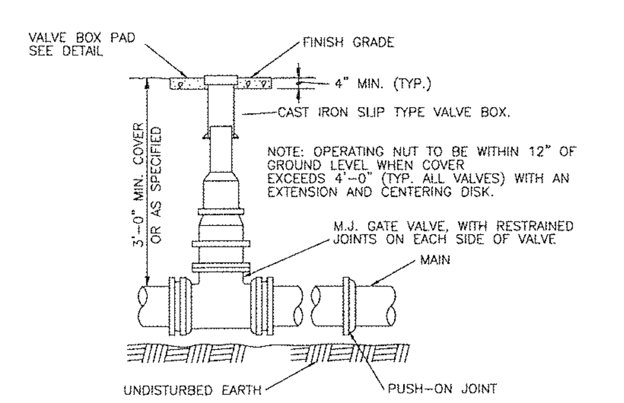

CREATED 02/24/03
REVISED

VALVE BOX DETAIL SLIP TYPE

PROVIDED FOR INFORMATIONAL PURPOSES ONLY. NO MODIFICATIONS WITHOUT WRITTEN PCU APPROVAL

PASCO COUNTY UTILITIES — DETAIL 30

PIPE RESTRAINT LENGTHS IN FEET COMMON FITTINGS

	WATER MAINS - TEST PRESSURE 150 PSI				
	FITTING TYPE				
PIPE SIZE	11-1/4°	22-1/2°	45°	90°	DEAD END
4"	2'	4'	8'	20'	45'
6"	3'	6'	12'	28'	63'
8"	4'	7'	15'	36'	82'
10"	4'	9'	18'	43'	98'
12"	5'	10'	21'	50'	116'
16"	6'	13'	26'	63'	148'
20"	7'	15'	31'	76'	179'
24"	9'	17'	36'	87'	208'

	FORCE MAINS - TEST PRESSURE 100 PSI				
	FITTING TYPE				
PIPE SIZE	11-1/4°	22-1/2°	45°	90°	DEAD END
4"	1'	3'	6'	13'	30'
6"	2'	4'	8'	19'	42'
8"	2'	5'	10'	24'	55'
10"	3'	6'	12'	29'	66'
12"	3'	7'	14'	34'	77'
16"	4'	8'	18'	42'	99'
20"	5'	10'	21'	50'	119'
24"	6'	11'	24'	58'	139'

RESTRAINT LENGTHS ARE MEASURED FROM THE CENTER LINE OF THE FITTING ALONG THE PIPE IN BOTH DIRECTIONS (EXCEPT DEAD ENDS).

CREATED 02/24/03
REVISED

RESTRAINED JOINT TABLE COMMON FITTINGS

PROVIDED FOR INFORMATIONAL PURPOSES ONLY. NO MODIFICATIONS WITHOUT WRITTEN PCU APPROVAL

PASCO COUNTY UTILITIES — DETAIL 31

PIPE RESTRAINT LENGTHS IN FEET TEES (BRANCH SIDE)

	WATER MAINS - TEST PRESSURE 150 PSI								
	BRANCH SIZE								
RUN SIZE	3"	4"	6"	8"	10"	12"	16"	20"	24"
3"	6'	14'	30'	—	—	—	—	—	—
4"	2'	11'	28'	44'	—	—	—	—	—
6"	1'	2'	22'	40'	52'	—	—	—	—
8"	1'	1'	16'	35'	48'	62'	—	—	—
10"	1'	1'	10'	30'	44'	58'	83'	—	—
12"	1'	1'	3'	25'	40'	55'	80'	103'	—
16"	1'	1'	1'	14'	31'	48'	75'	98'	119'
20"	1'	1'	1'	2'	22'	40'	69'	94'	116'
24"	1'	1'	1'	1'	11'	31'	63'	89'	111'

RESTRAINT LENGTHS ARE MEASURED FROM THE CENTER LINE OF THE TEE ALONG THE BRANCH FOR THE DISTANCE INDICATED. A MINIMUM OF 5 FEET OF RESTRAINED PIPE MUST BE INSTALLED ON BOTH RUNS OF THE TEE. MEGALUG TYPE RESTRAINERS ARE REQUIRED ON ALL JOINTS.

CREATED 02/24/03
REVISED

RESTRAINED JOINT TABLE TEES (BRANCH SIDE)

PROVIDED FOR INFORMATIONAL PURPOSES ONLY. NO MODIFICATIONS WITHOUT WRITTEN PCU APPROVAL

PASCO COUNTY UTILITIES — DETAIL 32

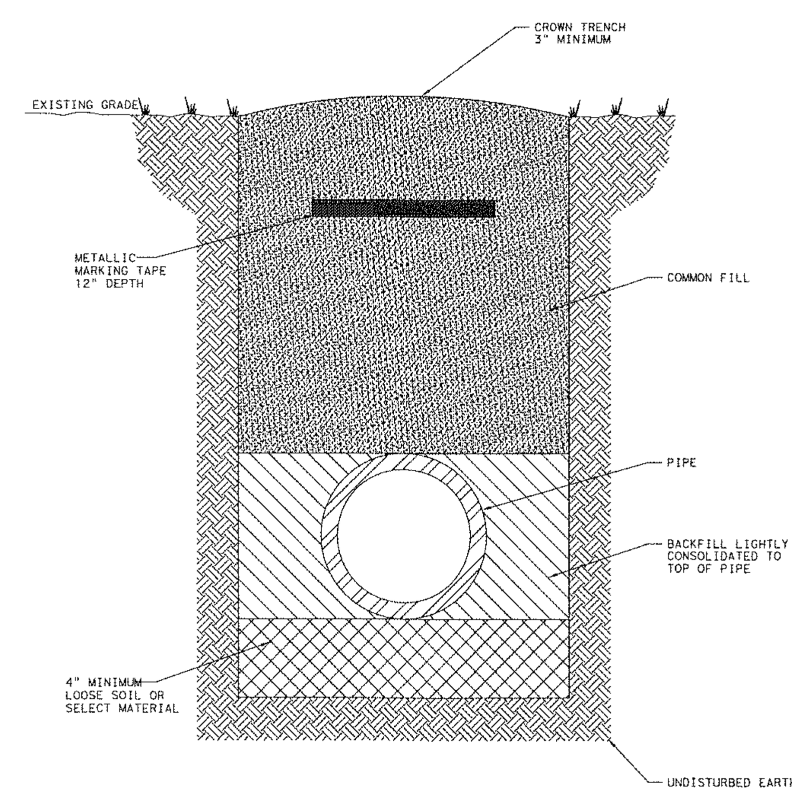

NOTES:
- LOOSE SOIL OR SELECT MATERIAL IS NATIVE SOIL EXCAVATED FROM THE TRENCH FREE OF ROCKS AND FOREIGN MATERIAL.
- COMMON FILL TO BE PLACED AND COMPACTED IN 12" LAYERS. ROLLING EQUIPMENT SHALL NOT BE USED FOR COMPACTION UNTIL A MINIMUM OF 18" OF COMMON FILL HAS BEEN PLACED AND COMPACTED OVER THE PIPE. THREE FEET OF FILL SHALL BE PLACED BEFORE A HYDROHAMMER MAY BE USED FOR COMPACTION.

NTS

CREATED 02/24/03
REVISED

PIPE LAYING CONDITIONS STANDARD UNPAVED AREAS

PROVIDED FOR INFORMATIONAL PURPOSES ONLY. NO MODIFICATIONS WITHOUT WRITTEN PCU APPROVAL

PASCO COUNTY UTILITIES — DETAIL 35

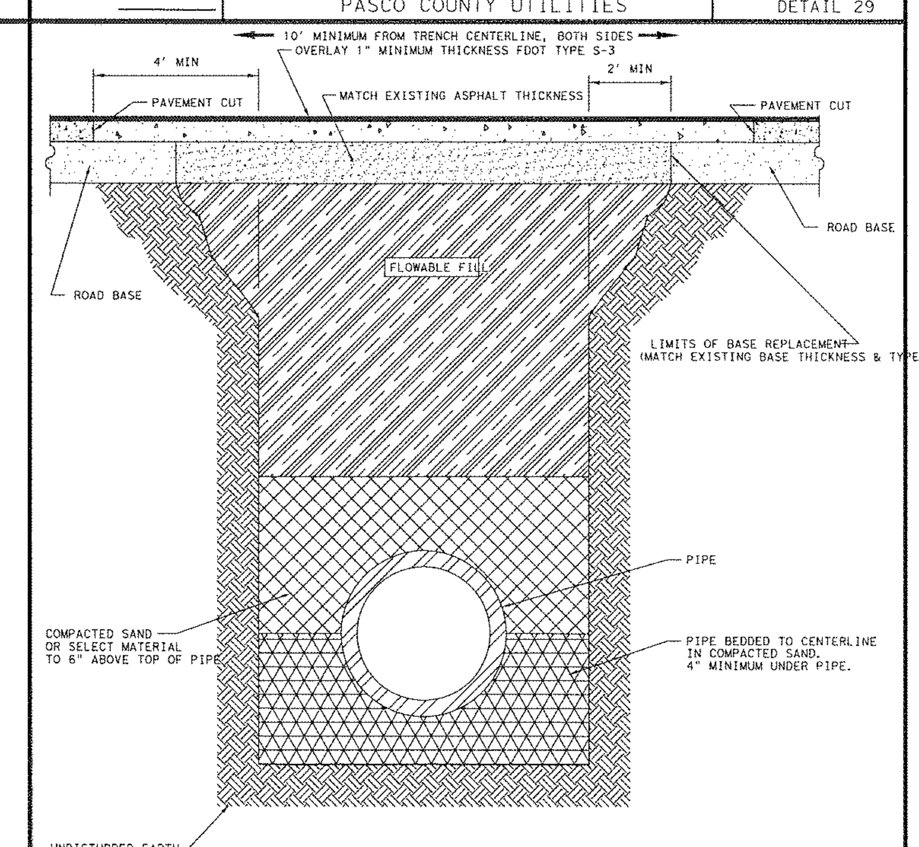

NOTE:
- SELECT MATERIAL IS NATIVE SOIL EXCAVATED FROM THE TRENCH FREE OF ROCKS AND FOREIGN MATERIAL.
- COMPACTION TO TOP OF PILE IS TO BE APPROXIMATELY 98 STANDARD PROCTOR, AASHTO T-99.
- EXISTING CONCRETE/ASPHALT PAVEMENT SURFACE AND BASE TO BE CUT SQUARE WITH CONCRETE SAW.

NTS

CREATED 03/06/03
REVISED

PIPE LAYING CONDITIONS FLOWABLE FILL BACKFILL STANDARD EXISTING PAVED AREAS & ROADWAYS

PROVIDED FOR INFORMATIONAL PURPOSES ONLY. NO MODIFICATIONS WITHOUT WRITTEN PCU APPROVAL

PASCO COUNTY UTILITIES — DETAIL 36

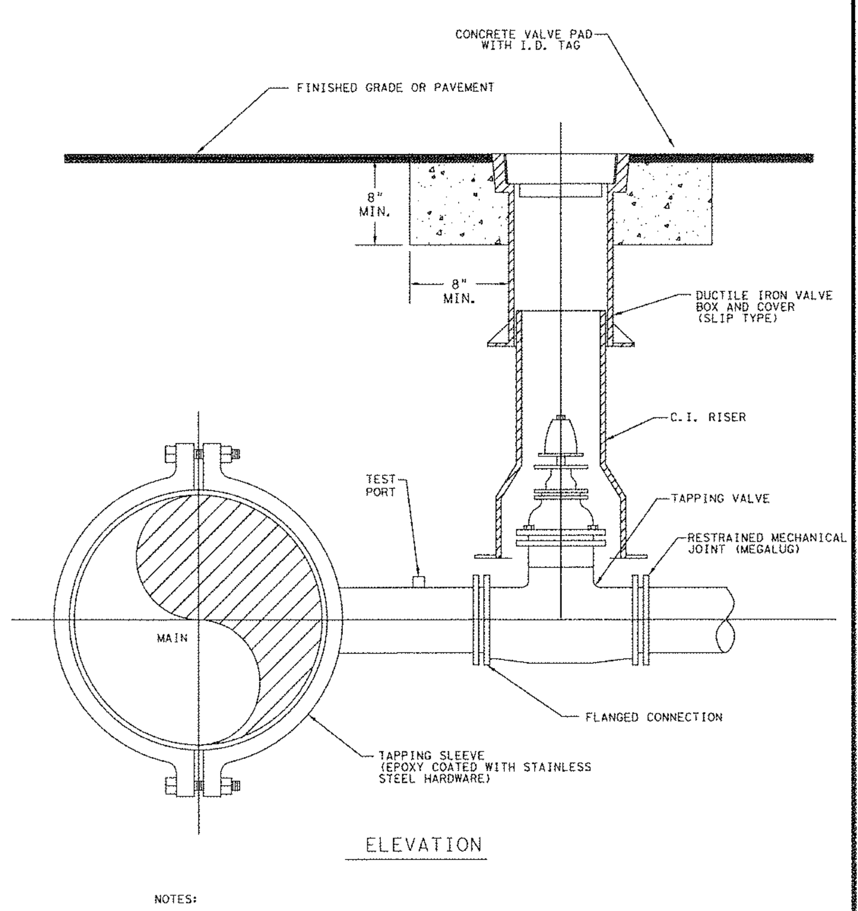

ELEVATION

NOTES:
- SADDLE CONNECTION WILL BE TESTED TO 150 PSI PRIOR TO TAPPING MAIN.
- MECHANICAL JOINTS/UNDERGROUND PIPING SHALL BE RESTRAINED AS SPECIFIED BY COUNTY/ENGINEER.
- VALVE EXTENSION ROD SHALL BE UTILIZED, AS NECESSARY, SO THAT VALVE OPERATING NUT IS A MAXIMUM OF 3' BELOW GRADE.

CREATED 02/24/03
REVISED

WATER, REUSE, AND FORCE MAIN TAPPING DETAIL W/ VALVE LOCATION

PROVIDED FOR INFORMATIONAL PURPOSES ONLY. NO MODIFICATIONS WITHOUT WRITTEN PCU APPROVAL

PASCO COUNTY UTILITIES — DETAIL 37

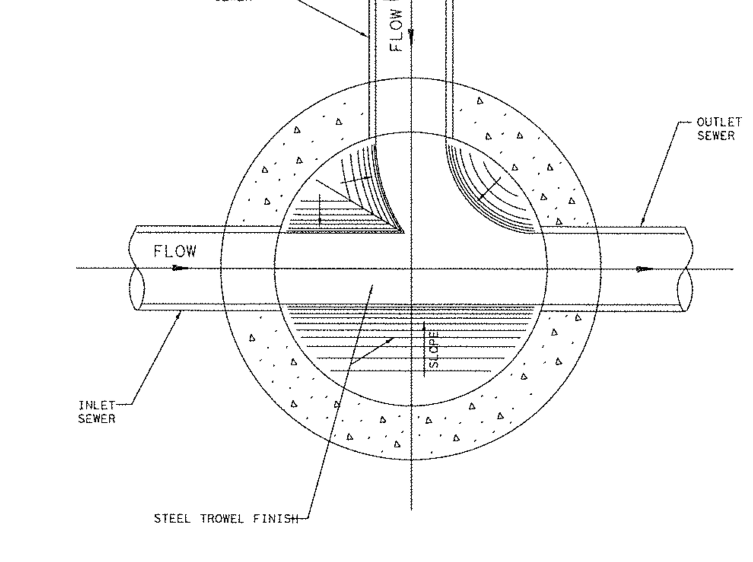

CREATED 02/24/03
REVISED

STANDARD MANHOLE (BENCH AND INVERTS)

PROVIDED FOR INFORMATIONAL PURPOSES ONLY. NO MODIFICATIONS WITHOUT WRITTEN PCU APPROVAL

PASCO COUNTY UTILITIES — DETAIL 39

NOTE:
PRECAST CONCRETE SHALL ATTAIN A MINIMUM COMPRESSIVE STRENGTH OF 4,000 p.s.i. AT 28 DAYS.

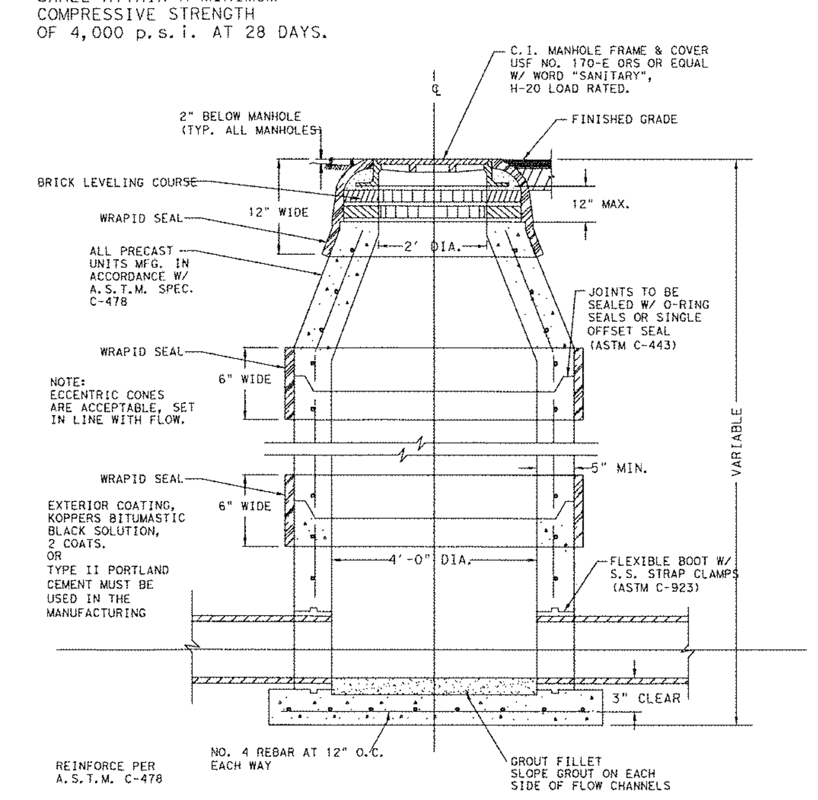

NOTE:
1. WRAPID SEAL MUST BE USED ON ALL JOINTS, CASTINGS AND RISER RINGS: ON ALL JOINTS ON AIR RELEASES, MANHOLES, GREASE/WATER, OIL/WATER SEPARATORS, AND WETWELLS.
2. WRAPID SEAL MUST BE USED IN ACCORDANCE WITH MANUFACTURES RECOMMENDATIONS.
3. PASCO COUNTY SHALL HAVE THE OPTION OF SPECIFYING THE TYPE OF INTERIOR LINING TO BE INSTALLED FOR EACH INDIVIDUAL MANHOLE.
4. PASCO COUNTY SHALL HAVE THE OPTION OF REQUIRING A NEGATIVE PRESSURE TEST PER ASTM C-1244
5. LIFT HOLES MUST NOT PENETRATE THE WALLS

CREATED 02/24/03
REVISED

STANDARD MANHOLE

PROVIDED FOR INFORMATIONAL PURPOSES ONLY. NO MODIFICATIONS WITHOUT WRITTEN PCU APPROVAL

PASCO COUNTY UTILITIES — DETAIL 41

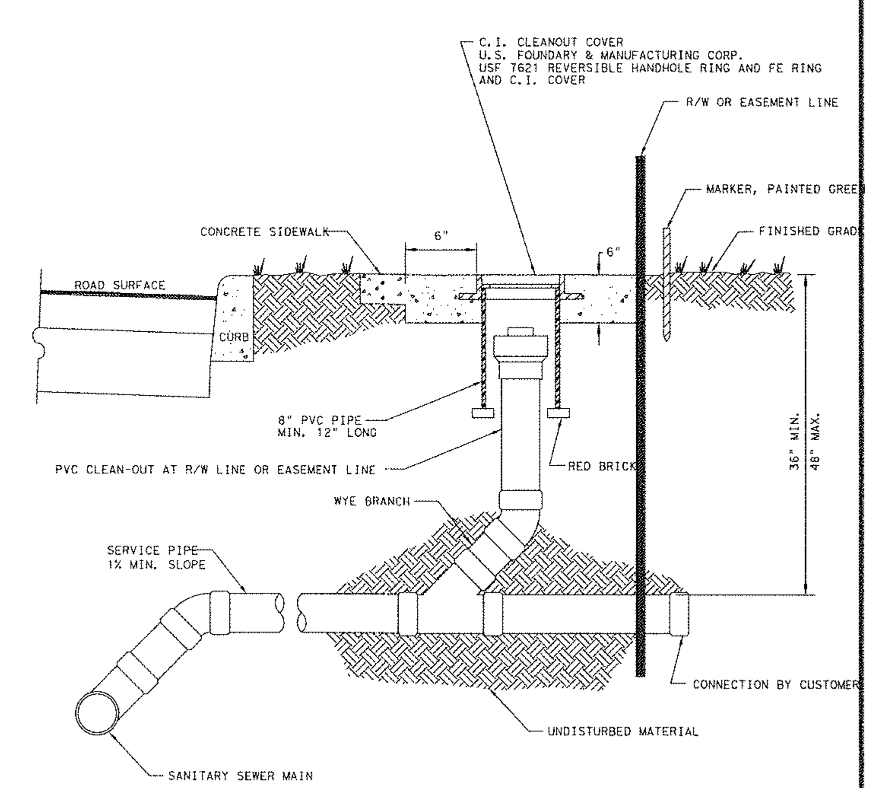

NTS

CREATED 02/24/03
REVISED

SANITARY SEWER - SINGLE WYE CONNECTION AND TYPICAL CLEAN-OUT

PROVIDED FOR INFORMATIONAL PURPOSES ONLY. NO MODIFICATIONS WITHOUT WRITTEN PCU APPROVAL

PASCO COUNTY UTILITIES — DETAIL 45

SURVEY INFORMATION

PREPARED BY:
GEORGE A. SHIMP II & ASSOC., INC
3301 DeSOTO BOULEVARD, SUITE D
PALM HARBOR, FLORIDA 34683
(727) 784-5496
DATE: JULY 2013

LEGAL DESCRIPTION:
A PORTION OF SECTION 30, TOWNSHIP 26 SOUTH, RANGE 17 EAST, PASCO COUNTY FLORIDA
McDONALD'S PARCEL CONTAINS 61,200 SQUARE FEET OR 1.40 ACRES, MORE OR LESS

PLAN SCALE: REFER TO GRAPHIC SCALE

ADDITION
McDONALD'S RESTAURANT

STREET ADDRESS
STATE ROAD 54 & COUNTRY PLACE

CITY: NEW PORT RICHEY — STATE: FLORIDA

COUNTY: PASCO — SURVEY: ---- — ABSTRACT NO.: ----

L/C NUMBER: 009/2550

CORPORATE DWG. NAME: PASCO COUNTY STANDARD DETAILS

REV	DATE	DESCRIPTION	BY	ISSUE REF
----	----	----	----	----
----	----	----	----	----
----	----	----	----	----
----	----	----	----	----

Adams
27524 Cashford Circle, Ste. 101 • Wesley Chapel, Florida 33544 • (813) 929-7499
FLORIDA COA# 27614

TIM D. HODES — LICENSE No 67017 — STATE OF FLORIDA — PROFESSIONAL ENGINEER

OFFICE: FLORIDA REGION
ADDRESS: 10150 HIGHLAND MANOR DRIVE, SUITE 470; TAMPA, FLORIDA 33610

McDONALD'S®

THESE PLANS AND SPECIFICATIONS ARE THE PROPERTY OF McDONALD'S CORPORATION AND SHALL NOT BE REPRODUCED WITHOUT THEIR WRITTEN PERMISSION.

STATE ROAD 54 & COUNTRY PLACE
NEW PORT RICHEY, FLORIDA 34655

McDONALD'S L/C: 009/2550
ADAMS ENGINEERING No. 2013.049

PLAN APPROVALS — SIGNATURE (2 REQUIRED) — DATE
REGIONAL MGR.
CONST. MGR.
OPERATIONS DEPT.
REAL ESTATE DEPT.

CO-SIGN SIGNATURES
CONTRACTOR
OWNER

STATUS	DATE	BY
DATE DRAWN	02/2014	EAO
PLAN CHECKED	02/2014	TDH
AS-BUILT		

D1.0

FULL PATH: I:_Projects\2013\2013.049_McD Trinity - Duck Slough\Drawings\I:_Projects\2013\2013.049_McD Trinity - Duck Slough\Drawings\D1.0 PASCO COUNTY STANDARD DETAILS
PLOTTER: Adobe PDF
PLOT TIME: 11:15:07 AM
PLOT DATE: Tuesday, March 18, 2014
PLOTTED BY: Edgar Ortiz
FILENAME: D1.0 PASCO COUNTY STANDARD DETAILS.dwg

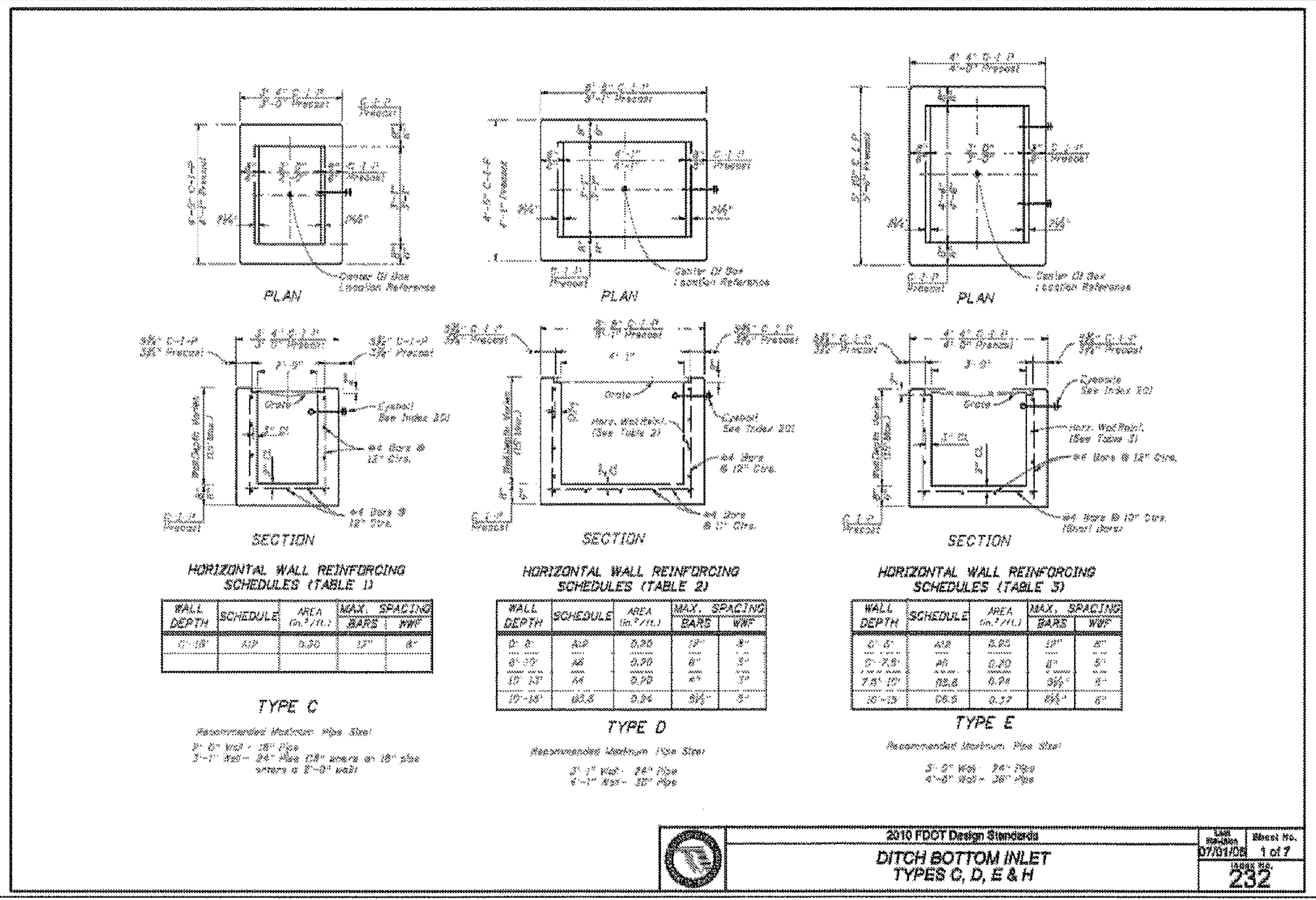

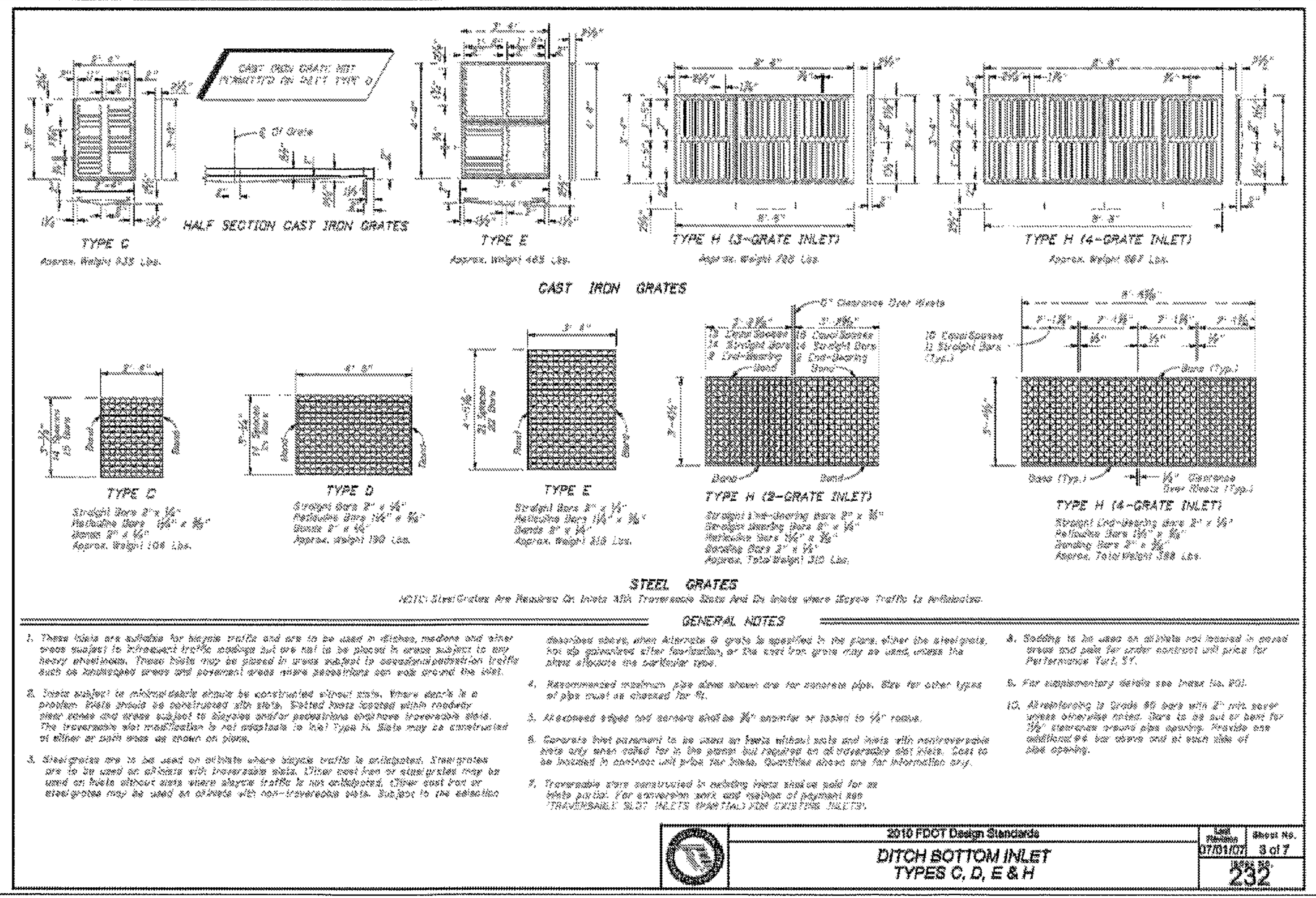

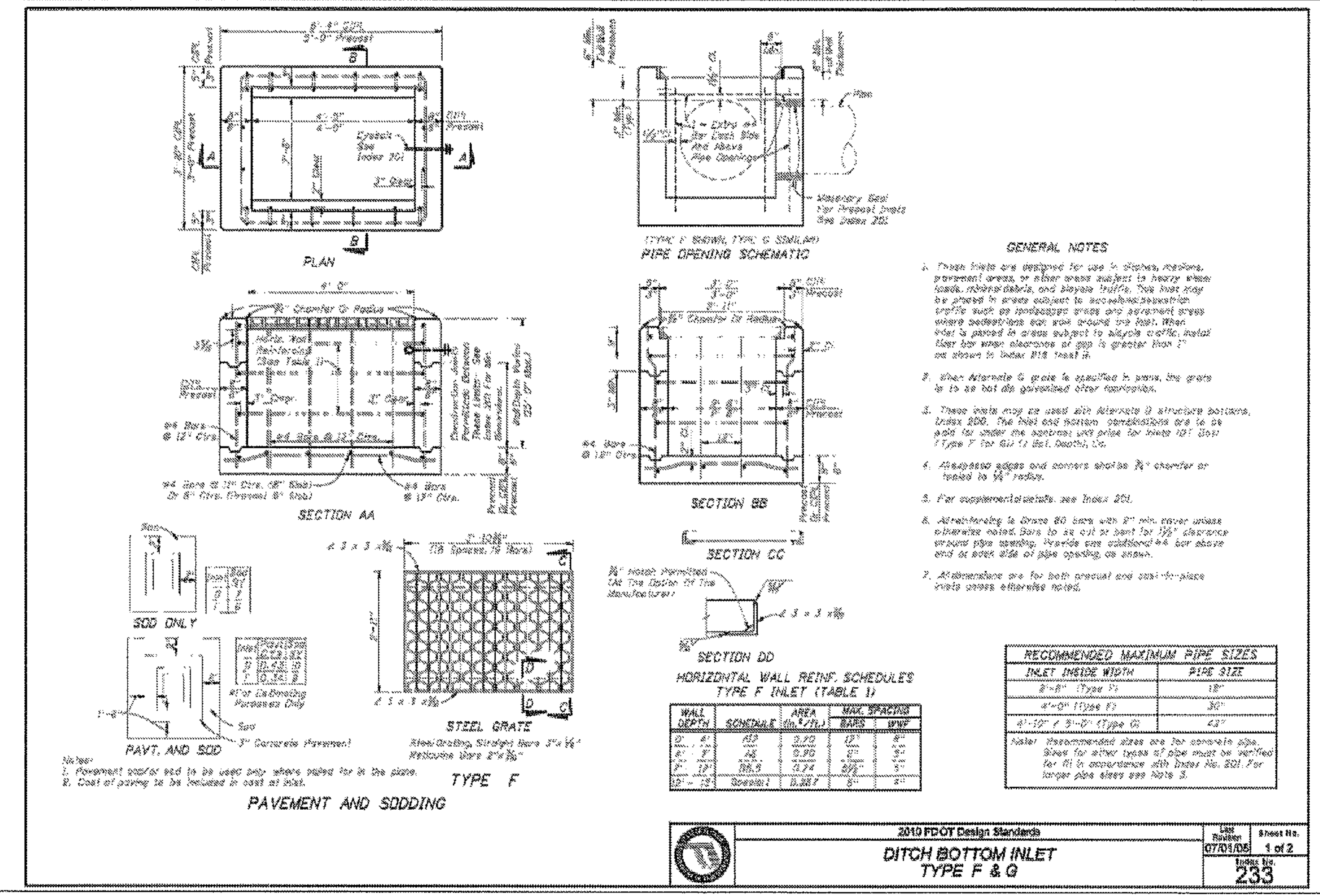

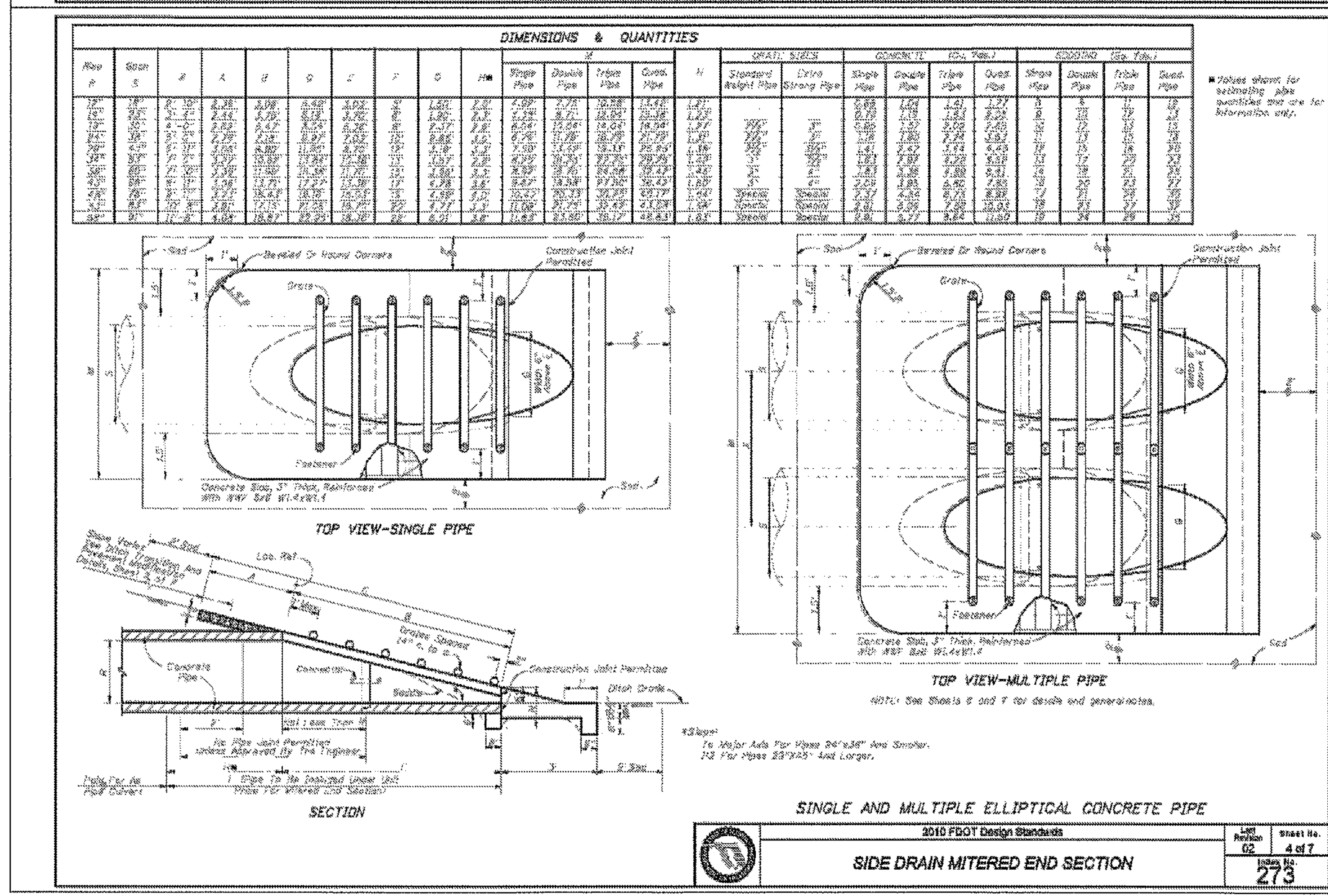

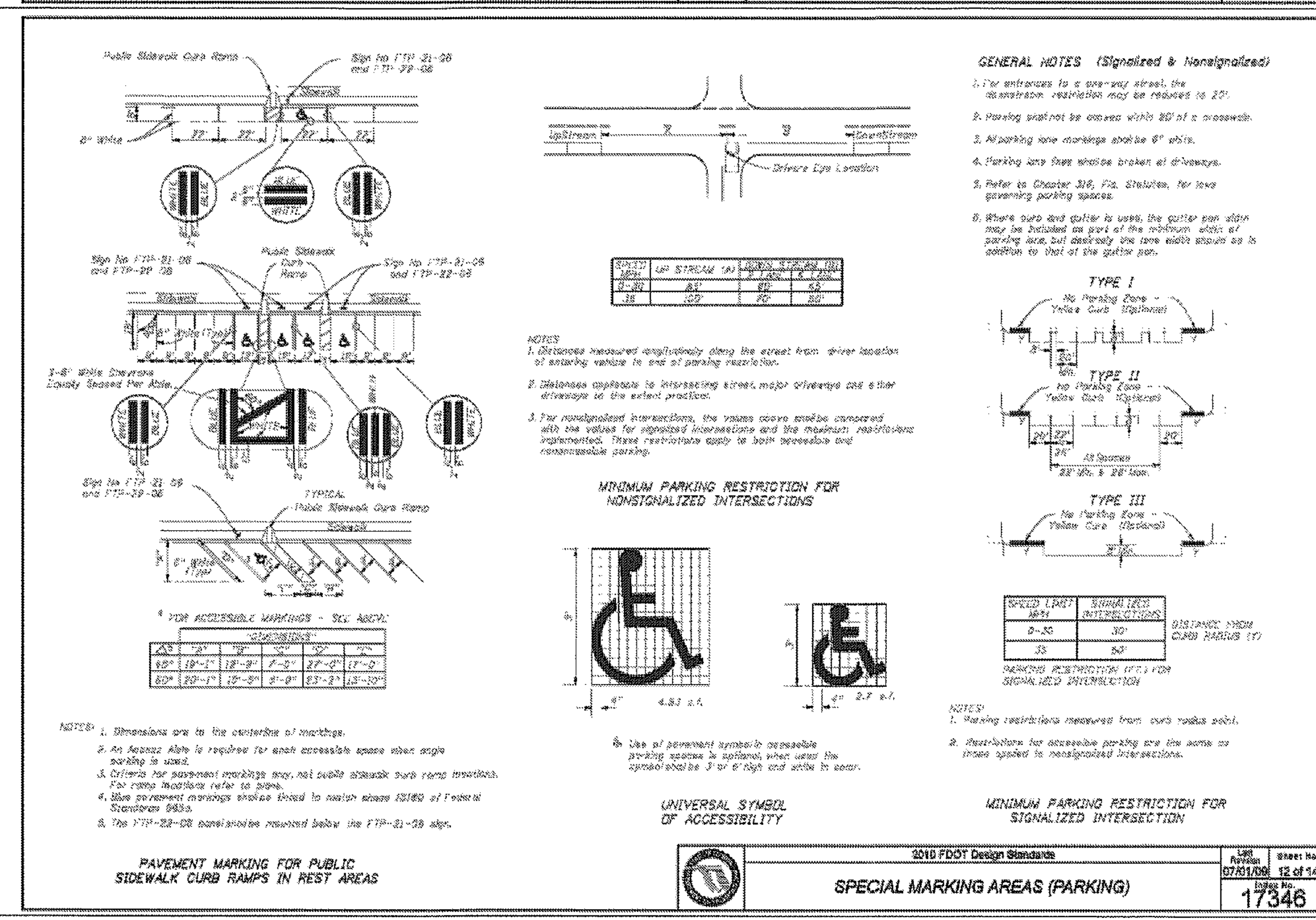

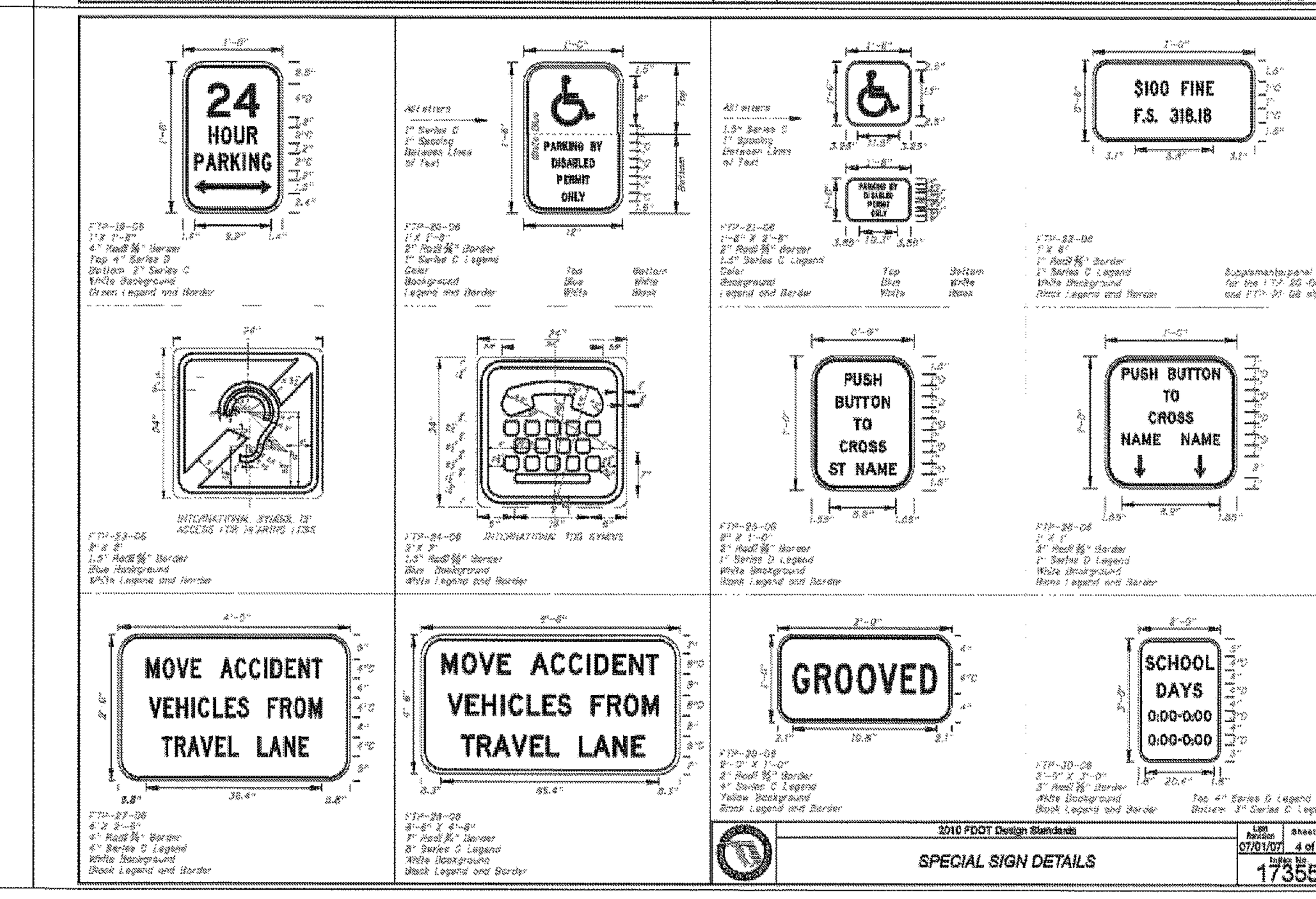

REV	DATE	DESCRIPTION	BY	ISSUE REF
----	----	----	----	----
----	----	----	----	----
----	----	----	----	----
----	----	----	----	----

Adams

27524 Cashford Circle, Ste. 101 ■ Wesley Chapel, Florida 33544 ■ (813) 929-7499

FLORIDA COA# 27614

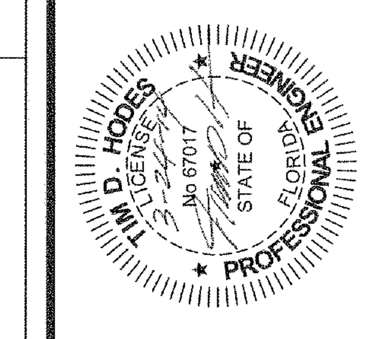

OFFICE: FLORIDA REGION

ADDRESS: 10150 HIGHLAND MANOR DRIVE, SUITE 470; TAMPA, FLORIDA 33610

McDONALD'S®

THESE PLANS AND SPECIFICATIONS ARE THE PROPERTY OF McDONALD'S CORPORATION AND SHALL NOT BE REPRODUCED WITHOUT THEIR WRITTEN PERMISSION.

STATE ROAD 54 & COUNTRY PLACE
NEW PORT RICHEY, FLORIDA 34655

MCDONALD'S L/C: 009/2550
ADAMS ENGINEERING No. 2013.049

PLAN APPROVALS

SIGNATURE (2 REQUIRED)	DATE
REGIONAL MGR.	
CONST. MGR.	
OPERATIONS DEPT.	
REAL ESTATE DEPT.	

CO-SIGN SIGNATURES

CONTRACTOR	
OWNER	

STATUS	DATE	BY
DATE DRAWN	----	----
PLAN CHECKED	----	----
AS-BUILT		

SURVEY INFORMATION

PREPARED BY:
GEORGE A. SHIMP II & ASSOC., INC
3301 DeSOTO BOULEVARD, SUITE D
PALM HARBOR, FLORIDA 34683
(727) 784-5496
DATE: JULY 2013

LEGAL DESCRIPTION:
A PORTION OF SECTION 30, TOWNSHIP 26 SOUTH, RANGE 17 EAST, PASCO COUNTY FLORIDA
McDONALD'S PARCEL CONTAINS
61,200 SQUARE FEET OR 1.40 ACRES, MORE OR LESS

PLAN SCALE: REFER TO GRAPHIC SCALE

ADDITION
McDONALD'S RESTAURANT

STREET ADDRESS
STATE ROAD 54 & COUNTRY PLACE

CITY	STATE
NEW PORT RICHEY	FLORIDA

COUNTY:	SURVEY:	ABSTRACT NO.
PASCO	----	----

L/C NUMBER:	CORPORATE DWG. NAME
009/2550	STANDARD DETAILS

D1.1

FULL PATH: I:_Projects\2013\2013.049_McD Trinity - Duck Slough\Drawings\I:_Projects\2013\2013.049_McD Trinity - Duck Slough\Drawings\D1.1 STANDARD DETAILS
PLOTTER: Adobe PDF
PLOT TIME: 11:17:02 AM
PLOT DATE: Tuesday, March 18, 2014
PLOTTED BY: Edgar Ortiz
FILENAME: D1.1 STANDARD DETAILS.dwg

DRWG. NO. 1PCP28868

NOTES:

1. THE FOOTCANDLE LEVELS AS SHOWN ARE BASED ON THE FOLLOWING CRITERIA. ANY SUBSTITUTIONS IN SPECIFIED FIXTURES OR CHANGES TO LAYOUT WILL AFFECT LIGHTING LEVELS SHOWN AND WILL NOT BE THE RESPONSIBILITY OF SECURITY LIGHTING.
2. THE CONTRIBUTION OF THE SOFFIT / BUILDING LIGHTING IS NOT REFLECTED ON THE DRAWING UNLESS SOFFIT / BUILDING LIGHTING IS SPECIFIED IN THE FIXTURE SCHEDULE BELOW.
3. DISTANCE BETWEEN READINGS 10'
4. FINAL ADJUSTMENTS TO AIMING ANGLE/DIRECTION OF FIXTURES MAY BE REQUIRED TO ELIMINATE LIGHT TRESPASS OR GLARE ONTO ADJOINING PROPERTIES OR ROADWAYS.

RSB-RCS/L SERIES

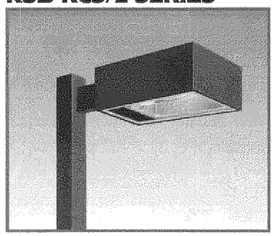

The RSB-RCS/L Series rectangular shoebox is offered in a variety of lighting distributions with sharp cutoff to meet the challenging demands of today's site lighting projects.

Fixture Specifications

- One-piece formed aluminum housing
- Hydroformed aluminum reflector
- Die cast zinc latches permit tool-free entry
- High power factor ballast with -20°F starting
- Consult factory for glare shield options
- Lamp and arm included
- Flat tempered glass lens
- Luminaire finished in weatherproof powder-coat paint
- Available with photocell and polycarbonate shield
- Rotatable optics (RCL only)
- UL listed for wet locations

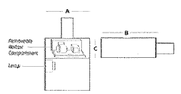

A	B	C	EPA	WEIGHT
RSB-RCS				
18.25"	23.5"	8.5"	2.1 ft²	42 lbs.
RSB-RCL				
22.25"	30"	10.5"	3.0 ft²	70 lbs.

ORDERING INFORMATION

SAMPLE CATALOG NUMBER

RSB-RCX XXXXXXX XX X XX

Series | Wattage/Source | Finish | Distribution | Voltage

SERIES

RSB-RCS	RSB Series - Small
RSB-RCL	RSB Series - Large

WATTAGE/SOURCE

100PMH	100 watt pulse start metal halide (RCS)
175PMH	175 watt pulse start metal halide (RCS)
250PMH	250 watt pulse start metal halide (RCS)
320PMH	320 watt pulse start metal halide (RCS/L)
1000MH	1000 watt metal halide (RCL)
100HPS	100 watt high pressure sodium (RCS)
150HPS	150 watt high pressure sodium (RCS)
250HPS	250 watt high pressure sodium (RCS)
400HPS	400 watt high pressure sodium (RCS/L)
1000HPS	1000 watt high pressure sodium (RCL)

FINISH

DB	Dark Bronze
BK	Black
WH	White
PS	Platinum Silver

DISTRIBUTION

3	Type III
4	Type IV
5	Type V (square)

VOLTAGE

MT	Multi-tap ballast (120, 208, 240, 277)
4B	480 volt

1 Consult factory for other wattages and Pulse Start availability.
2 Consult factory for other finishes.

SECURITY LIGHTING SYSTEMS
A HUBBELL LIGHTING, INC. COMPANY
Performance Designed Lighting Products
1085 Johnson Drive • Buffalo Grove, IL 60089 • TOLL-FREE: 800-544-4848 • PHONE: 847-279-0627 • FAX: 847-279-0642
www.securitylighting.com

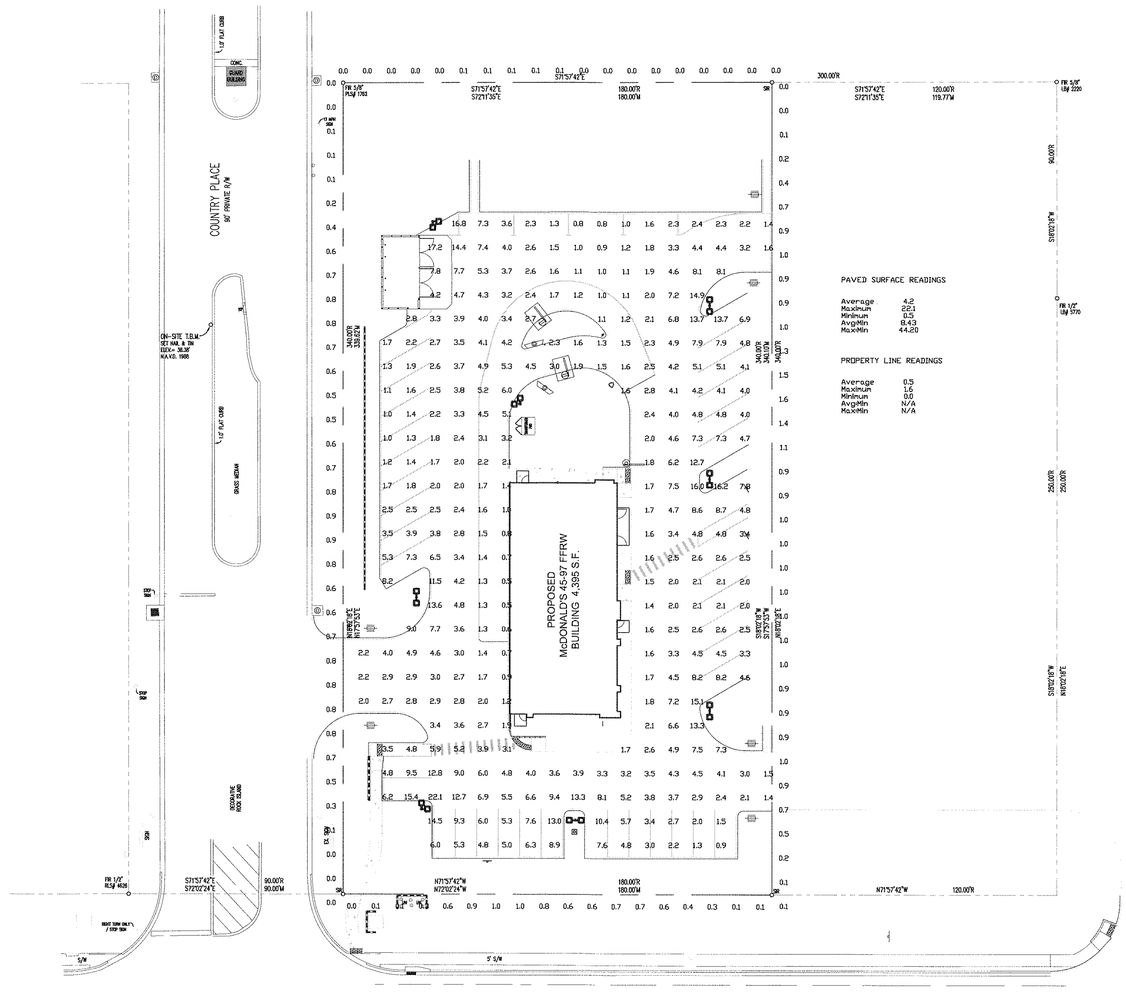

** - SPECIFY COLOR

NOTE: ALL POLES ARE DRILLED

FIXTURE TYPE:	SYMBOL	FIXTURE QUANTITY	CONFIG	QUANTITY	EPA	MOUNTING HEIGHT	LLF	POLE TYPE:	QUANTITY	WIND LOAD	ALLOWED EPA
RSB/RCS-320PSMH-**-4-MT-HS	-□	16	DBL90	3	3.10	21'	0.75	CONCRETE BY OTHERS	8	110mph	N/A
			DBL180	5	4.20						

* PROJECT WIND LOAD CRITERIA BASED ON:
ASCE 7-10 WIND SPEEDS (3-SEC PEAK GUST MPH)
50 YEAR MEAN RECURRENCE INTERVAL

THIS LIGHTING PATTERN REPRESENTS ILLUMINATION LEVELS CALULATED FROM LABORATORY DATA TAKEN UNDER CONTROLLED CONDITIONS IN ACCORDANCE WITH ILLUMINATING ENGINEERING SOCIETY APPROVED METHODS. ACTUAL PERFORMANCE OF ANY MANUFACTURER'S LUMINAIRES MAY VARY DUE TO VARIATION IN ELECTRICAL VOLTAGE, TOLERANCE IN LAMPS, AND OTHER VARIABLE FIELD CONDITIONS.

UNLESS OTHERWISE SPECIFIED, ALL DIMENSIONS ARE IN INCHES

NOTES:

SCALE 1" = 30' 0"	DATE	NEXT ASSEMBLY	REF. DRWGS.
DRAWN BY MW	3/6/14		
CHECKED BY			
APPROVED BY			
APPROVED BY		FINISH	
APPROVED BY			
SHOP ORDER		MATERIAL	
PROJECT NO.			

SECURITY LIGHTING SYSTEMS
Performance Designed Lighting Products
1085 Johnson Dr., Buffalo Grove, Illinois 60089
1-800-544-4848

POINT-BY-POINT FOOTCANDLE PLOT FOR
- McDONALD'S -
NEW PORT RICHEY, FL

DRAWING NUMBER 1PCP28868 LP1.0

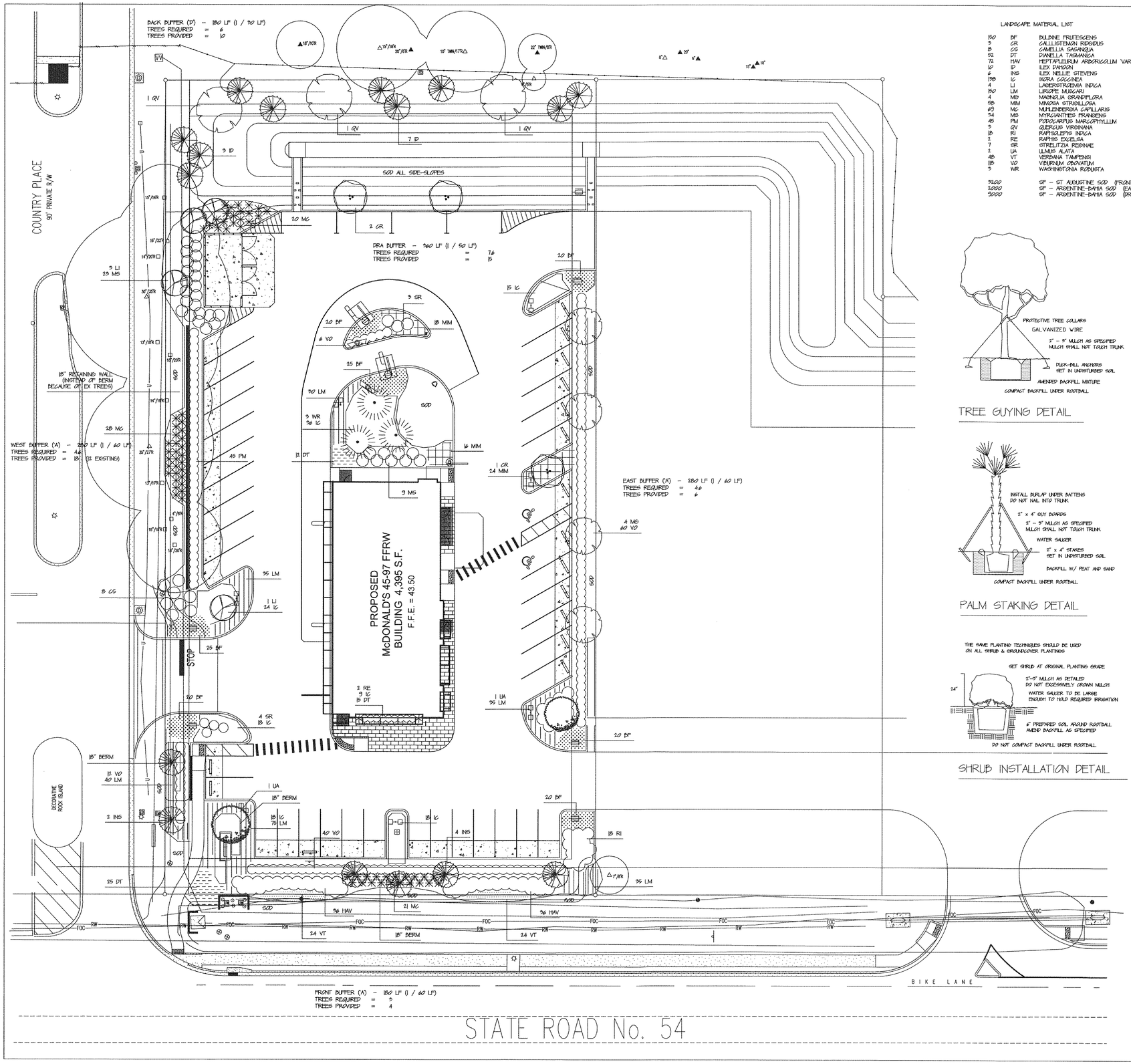

LANDSCAPE MATERIAL LIST

150	BF	BULBINE FRUTESCENS	BULBINE		1 GAL. FULL
3	CR	CALLISTEMON RIGIDUS	BOTTLE-BRUSH TREE		30 GAL. 2" CAL. SINGLE TRUNK, 8' TALL, FULL CANOPY
8	CS	CAMELLIA SASANQUA	DWARF CAMELLIA		5 GAL. 24" – 30", FULL
92	DT	DIANELLA TASMANICA	FLAX LILY	DT	1 GAL. FULL
72	HAV	HEPTAPLEURUM ARBORICOLUM 'VAR'	DWARF SCHEFFLERA		3 GAL. 18" – 18", FULL
10	ID	ILEX DAHOON	DAHOON HOLLY	DT NATIVE	30 GAL. 2" CAL. 8' TALL, FULL CANOPY
4	INS	ILEX NELLIE STEVENS	NELLIE STEVENS HOLLY	DT NATIVE	30 GAL. 2" CAL. SINGLE TRUNK, 8' TALL, FULL CANOPY
138	IC	IXORA COCCINEA	IXORA		3 GAL. 18" – 18", FULL
4	LI	LAGERSTROEMIA INDICA	GRAPE MYRTLE		30 GAL. MULTI-TRUNK, 5" CAL. 6 TALL, FULL CANOPY
150	LM	LIRIOPE MUSCARI	BORDER GRASS	DT	1 GAL. FULL, MIN 7-9 PIPS
4	MG	MAGNOLIA GRANDIFLORA	SOUTHERN MAGNOLIA	NATIVE	45 GAL. 2" CAL. 8' TALL, FULL CANOPY
58	MIM	MIMOSA STRIBILLOSA	SUNSHINE MIMOSA	DT NATIVE	1 GAL. FULL
60	MC	MUHLENBERGIA CAPILLARIS	MUHLY GRASS	DT NATIVE	3 GAL. FULL
54	MS	MYRCIANTHES FRAGRANS	SIMPSONS STOPPER	DT NATIVE	3 GAL. 24" – 30", FULL
45	PM	PODOCARPUS MACROPHYLLUM	PLORIDA YEW		3 GAL. 24" – 30", FULL, SET 25 o.c.
3	QV	QUERCUS VIRGINIANA	LIVE OAK	NATIVE	45 GAL. 2" CAL. 8' TALL, FULL CANOPY
18	RI	RAPHIOLEPIS INDICA	INDIAN HAWTHORN		3 GAL. 18" – 18", FULL
2	RE	RAPHIS EXCELSA	LADY PALM		10 GAL. 1' – 3', FULL
7	SR	STRELITZIA REGINAE	BIRD OF PARADISE		3 GAL. 24" – 30", FULL
2	UA	ULMUS ALATA	WINGED ELM	DT NATIVE	30 GAL. 2" CAL. 8' TALL, FULL CANOPY
48	VT	VERBENA TAMPENSI	TAMPA VERVAIN	DT NATIVE	1 GAL. FULL
18	VO	VIBURNUM ODOVATUM	WALTERS VIBURNUM	DT NATIVE	3 GAL. 24" – 30", FULL, SET 3' o.c.
3	WR	WASHINGTONIA ROBUSTA	WASHINGTONIA PALM		8 & 8, 10' GT MIN, FULL HEAD

9,200 SF – ST AUGUSTINE SOD (FRONT BUFFER & DRIVE-THUR ISLAND)
2,000 SF – ARGENTINE-BAHIA SOD (EAST & WEST BUFFERS)
3,000 SF – ARGENTINE-BAHIA SOD (DRA SIDE-SLOPES)

TREE GUYING DETAIL

PALM STAKING DETAIL

THE SAME PLANTING TECHNIQUES SHOULD BE USED ON ALL SHRUB & GROUNDCOVER PLANTINGS

SHRUB INSTALLATION DETAIL

LANDSCAPE NOTES

1. ALL MATERIAL SHALL BE FLORIDA #1 GRADE OR BETTER
2. ALL LANDSCAPED AREAS SHALL BE MULCHED WITH 3" – 4" OF PINE BARK MULCH
3. ALL NEW TREES MUST BE GUYED OR STAKED AS DETAILED
4. EXISTING TREES THAT ARE TO REMAIN MUST BE PROTECTED THROUGHOUT CONSTRUCTION
5. THE EXISTING TREES ALONG THE WEST PROPERTY LINE SHALL BE PRUNED DURING CONSTRUCTION AS DIRECTED BY THE LANDSCAPE ARCHITECT
6. PLACEMENT OF ALL LANDSCAPE MATERIAL MUST BE APPROVED BY THE LANDSCAPE ARCHITECT
7. ALL LANDSCAPE MATERIAL MUST BE INSTALLED WITH NATIVE PEAT AND FERTILIZER
8. ALL PALMS SHALL HAVE STRAIGHT, UNBLEMISHED TRUNKS AS APPROVED BY LANDSCAPE ARCHITECT
9. ALL MATERIAL SHALL BE GUARANTEED FOR 30 DAYS FROM THE DATE OF ACCEPTANCE
10. LANDSCAPE CONTRACTOR SHALL WATER-IN ALL TREES AND PALMS, REMOVING ALL AIR-POCKETS
11. DURING THE ESTABLISHMENT PERIOD (FIRST 30 DAYS) THE LANDSCAPE CONTRACTOR SHALL APPLY A MINIMUM OF 60 – 80 GPD TO ALL NEW TREES AND PALMS
12. DURING INSTALLATION OF ALL PALMS 'DIEHARD' PALM TRANSPLANT SHALL BE APPLIED PER MANUFACTURER'S SPECIFICATIONS AND CONTRACTOR MUST VERIFY THIS TO THE LANDSCAPE ARCHITECT
13. LANDSCAPE CONTRACTOR MUST LOCATE ALL UNDERGROUND UTILITIES PRIOR TO ANY INSTALLATION
14. PLANT MATERIAL CALCULATIONS
    - TOTAL TREES = 35
    - TREE DIVERSITY REQUIRED = 7
    - TREE DIVERSITY PROVIDED = 8
    - TOTAL PLANTS USED = 1,095
    - DROUGHT-TOLERATE REQUIRED = 548 (50%)
    - DROUGHT-TOLERATE PROVIDED = 648 (59%)
    - TOTAL PLANTS USED = 1,095
    - NATIVE PLANTS REQUIRED = 329 (30%)
    - NATIVE PLANTS PROVIDED = 363 (33%)
15. ALL MATERIAL SHALL BE GUARANTEED FOR 30 DAYS FROM THE DATE OF ACCEPTANCE
16. NO PLANTINGS OR OTHER OBSTRUCTIONS MAY BE WITHIN THE 2' VEHICULAR OVERHANG AREA
17. NEW SOD SHALL BE INSTALLED BETWEEN NEW PLANTING BEDS AND EXISTING GRASS
18. SOD IN THE FRONT BUFFER AND IN THE DRIVE-THUR ISLAND SHALL BE ST AUGUSTINE 'PALMETTO'
19. SOD INSTALLED IN EAST AND WEST BUFFERS, AND DRA SIDE-SLOPES SHALL BE ARGENTINE-BAHIA
20. ALL SOD MUST BE INSTALLED WITH NO GAPS OR OVERLAPS AS APPROVED BY THE LANDSCAPE ARCHITECT
21. PLANTING SOIL USED FOR THE BUILDING PLANTERS AND BACKFILLING OF THE LANDSCAPE ISLANDS, ETC., MUST BE REVIEWED AND APPROVED BY THE LANDSCAPE ARCHITECT PRIOR TO ANY INSTALLATION. ALL SOIL SHALL BE WEED-FREE, CONTAIN NO STICKS, ROCKS, OR OTHER FOREIGN OBJECTS, AND SHALL BE A MIXTURE OF 40% SAND, 50% LOAM, AND 10% TOP-SOIL
22. THE OWNER SHALL BE RESPONSIBLE FOR MAINTENANCE OF THE LANDSCAPE AND IRRIGATION SYSTEM
23. NO ONE PLANT TYPE EXCEEDS 15% OF THE TOTAL LANDSCAPE MATERIAL USED
24. LESS THAN 30% OF THE TOTAL LANDSCAPED AREA IS GRASSED (EXCLUDING DRA)
25. NO ONE PLANT TYPE EXCEEDS 15% OF THE TOTAL LANDSCAPE MATERIAL USED
26. ALL LANDSCAPE INSTALLATION SHALL BE PER FLORIDA CHAPTER, INTERNATIONAL SOCIETY OF ARBORICULTURE STANDARDS FOR PLANTING AND THE FLORIDA NURSERY GROWERS AND LANDSCAPE ASSOCIATION
27. BUFFER CALCULATIONS
    - FRONT BUFFER ('A') – 180 LF (1 / 60 LF)
      - TREES REQUIRED = 3
      - TREES PROVIDED = 4
    - EAST BUFFER ('A') – 280 LF (1 / 60 LF)
      - TREES REQUIRED = 4.6
      - TREES PROVIDED = 6
    - WEST BUFFER ('A') – 280 LF (1 / 60 LF)
      - TREES REQUIRED = 4.6
      - TREES PROVIDED = 15 (12 EXISTING)
    - BACK BUFFER ('D') – 180 LF (1 / 30 LF)
      - TREES REQUIRED = 6
      - TREES PROVIDED = 10
    - DRA BUFFER – 360 LF (1 / 50 LF)
      - TREES REQUIRED = 7.6
      - TREES PROVIDED = 15

SCALE 1" = 20'

0 5 10 15 25 50 75

N

RICHARD A KESSELRING JR., PLA, ASLA
LANDSCAPE ARCHITECT , STATE OF FLORIDA #858

NO.	DATE	DESCRIPTION	BY

DRAWN BY: RAK
DATE: 3 / 14
SCALE: 1" = 20'
DRAWING NO:
VIEW NAME:
JOB NO.:
FB:
PG.

ENVIRONMENTAL DESIGN
ANDY KESSELRING, LANDSCAPE ARCHITECT
P.O. BOX 5121
1920 SE 8th STREET
OCALA, FLORIDA 34478
(352) 622-8899
LANDSCAPE ARCHITECTURE, SITE PLANNING,
GOLF COURSE DESIGN, COMMERCIAL-RESIDENTIAL DESIGN

LANDSCAPE PLAN
McDONALD'S RESTAURANT
NEW PORT RICHEY PASCO CO

SHEET ____ of ____

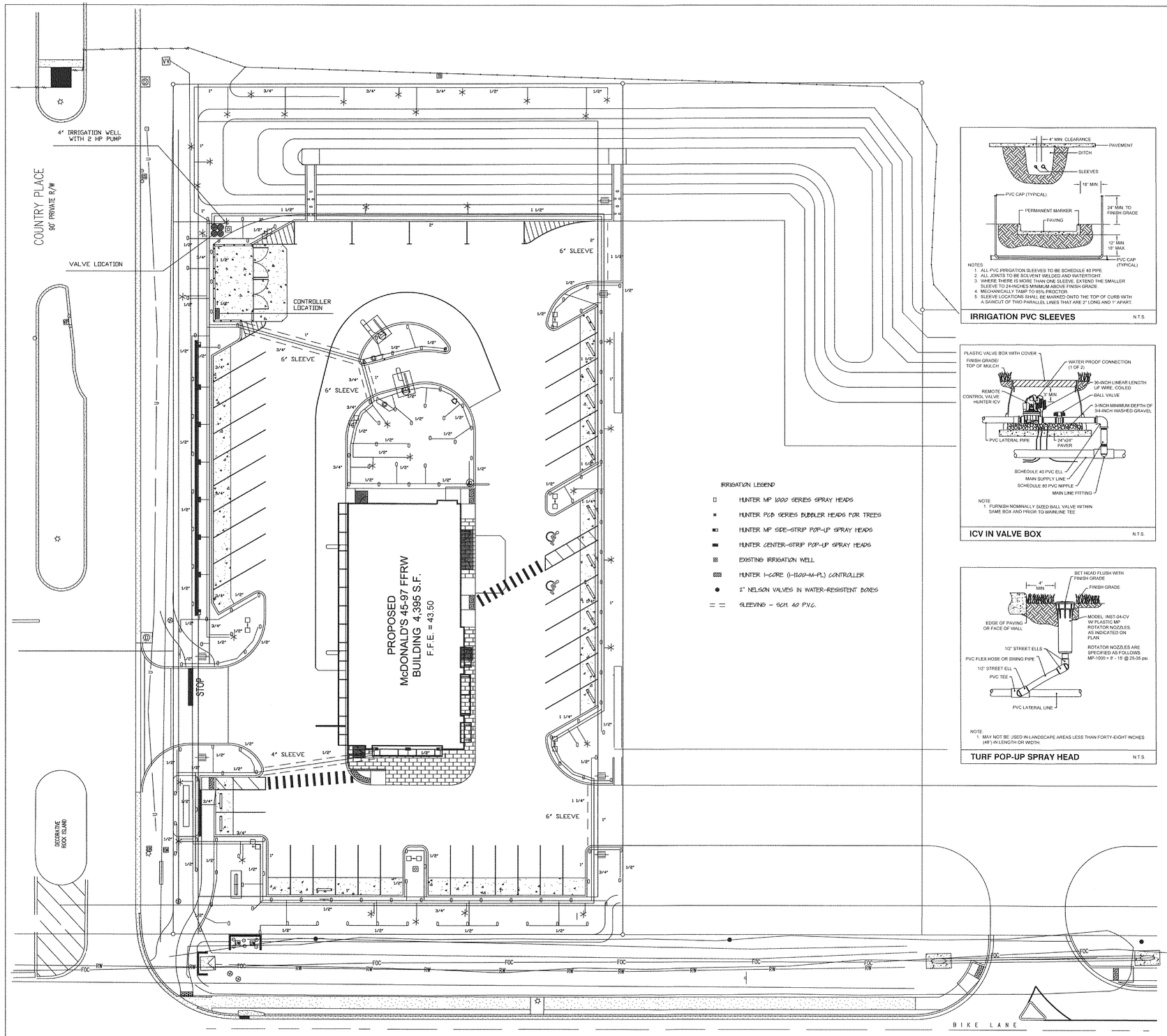

IRRIGATION LEGEND

- HUNTER MP 1000 SERIES SPRAY HEADS
- HUNTER PCB SERIES BUBBLER HEADS FOR TREES
- HUNTER MP SIDE-STRIP POP-UP SPRAY HEADS
- HUNTER CENTER-STRIP POP-UP SPRAY HEADS
- EXISTING IRRIGATION WELL
- HUNTER I-CORE (I-1200-M-PL) CONTROLLER
- 2" NELSON VALVES IN WATER-RESISTENT BOXES
- SLEEVING - SCH. 40 P.V.C.

NOTES:
1. ALL PVC IRRIGATION SLEEVES TO BE SCHEDULE 40 PIPE.
2. ALL JOINTS TO BE SOLVENT WELDED AND WATERTIGHT.
3. WHERE THERE IS MORE THAN ONE SLEEVE, EXTEND THE SMALLER SLEEVE TO 24-INCHES MINIMUM ABOVE FINISH GRADE.
4. MECHANICALLY TAMP TO 95% PROCTOR.
5. SLEEVE LOCATIONS SHALL BE MARKED ONTO THE TOP OF CURB WITH A SAWCUT OF TWO PARALLEL LINES THAT ARE 2" LONG AND 1" APART.

IRRIGATION PVC SLEEVES N.T.S.

NOTE:
1 FURNISH NOMINALLY SIZED BALL VALVE WITHIN SAME BOX AND PRIOR TO MAINLINE TEE

ICV IN VALVE BOX N.T.S.

NOTE
1 MAY NOT BE USED IN LANDSCAPE AREAS LESS THAN FORTY-EIGHT INCHES (48") IN LENGTH OR WIDTH.

TURF POP-UP SPRAY HEAD N.T.S.

IRRIGATION NOTES

1. MINOR CHANGES MAY BE MADE IN THIS LAYOUT WITH APPROVAL BY THE LANDSCAPE ARCHITECT
2. ALL HEAD LOCATIONS MUST BE APPROVED BY THE LANDSCAPE ARCHITECT PRIOR TO INSTALLATION
3. HEADS SHALL BE 1/4, 1/2, OR FULL CIRCLE AS EACH LOCATION REQUIRES
4. SPRAYS PATTERNS SHALL BE SET TO MINIMIZE SPRAY ONTO ADJACENT WALKS, DRIVES, AND BUILDINGS
5. WATER SUPPLY FOR THIS SYSTEM SHALL BE BY A NEW 4" WELL INSTALLED WHERE SHOWN. 2 HP PUMP SHALL BE INSTALLED AS PER STANDARD INDUSTRY PRACTICES
6. IRRIGATION WELL SHALL BE SET AT 125' FOR BIDDING PURPOSES, HOWEVER THE IRRIGATION CONTRACTOR SHALL BE RESPONSIBLE FOR VERIFING THAT SUFFICIENT AND ADEQUATE WATER HAS BEEN REACHED TO PROVIDE FOR THE SYSTEM AS DESIGNED. SHOULD THERE BE CONCERNS ABOUT THE DEPTHS NEEDED TO SUPPLY THIS SYSTEM, NOTIFY THE LANDSCAPE ARCHITECT IMMEDIATELY. ADDITIONAL DEPTHS MAY BE APPROVED BASED ON A PER/FOOT COST AS CONTAINED IN THE BIDS
7. THE OWNER WILL PROVIDE ELECTRICAL SERVICE TO THE WELL SITE
8. THE CONTROLLER SHALL BE LOCATED IN THE GENERAL AREA SHOWN AND SHALL BE MOUNTED AS APPROVED BY THE LANDSCAPE ARCHITECT IN A LOCKABLE CASE.
9. THE OWNER WILL PROVIDE AN ELECTRICAL OUTLET IN THE CONTROLLER AREA
10. ALL VALVES SHALL BE INSTALLED IN WATER-RESISTENT BOXES
11. ALL SLEEVING MUST BE INSTALLED PRIOR TO THE UNEROCKING OF THE PAVED AREAS
12. ALL SLEEVING SHALL BE SCH. 40 P.V.C. AND INSTALLED A MINIMUM OF 18" DEEP
13. ALL FEEDER LINES SHALL BE INSTALLED A MINIMUM OF 12" DEEP
14. RAINBIRD 'RAINCHECK' DEVICE SHALL BE INSTALLED TO MINIMIZE IRRIGATION DURING SUFFICIENT RAINFALL (RSD SERIES). IN ADDITION, AN ACQUIMA TDT SENSOR WITH SCX CONTROL MONITOR MUST BE INSTALLED AS LOCATED BY THE LANDSCAPE ARCHITECT FOR PROPER IRRIGATION AMOUNTS
15. THE ENTIRE SYSTEM MUST BE OPERATIONAL, REVIEWED, AND APPROVED BY THE LANDSCAPE ARCHITECT PRIOR TO FINAL ACCEPTANCE
16. THE CONTRACTOR SHALL RETURN WITHIN THE FIRST 30 DAYS TO ADJUST THE SYSTEM AS NECESSARY AND DIRECTED BY THE LANDSCAPE ARCHITECT
17. ALL LABOR AND MATERIALS SHALL BE GUARANTEED FOR 1 YEAR FOR FINAL ACCEPTANCE
18. THE CONTRACTOR MUST PROVIDE AN AS-BUILT DRAWING TO THE LANDSCAPE ARCHITECT PRIOR TO FINAL ACCEPTANCE
19. ALL REQUIRED BACKFLOW PREVENTION DEVICES SHALL BE INSTALLED AT THE WELL LOCATION
20. SLEEVES MUST BE INSTALLED IN ALL AREAS WHERE IRRIGATION PIPING IS INSTALLED UNDER PAVEMENT
21. ZONES ARE DESIGNED TO FUNCTION AT 35 GPM AND 40 PSI AT THE VALVE LOCATIONS. CONTRACTOR SHALL BE RESPONSIBLE FOR TESTING AT ALL HEADS TO INSURE PROPER PRESSURE AND WATER QUANITY FOR THE DESIGNED COVERAGE
22. CONTRACTOR SHALL CONSULT WITH BOTH OWNER AND THE LANDSCAPE ARCHITECT FOR THE TIMING OF THE SYSTEM, BASED ON CURRENT WATER RESTRICTIONS
23. SYSTEM DOES NOT PROVIDE 100% COVERAGE OF THE ENTIRE PROJECT SITE. CONTRACTOR MUST ADJUST HEADS TO COVER NEW PLANT INSTALLATION AND SOD AREAS AS DIRECTED BY THE LANDSCAPE ARCHITECT
24. ALL LINE LOCATIONS MUST BE ADJUSTED ON-SITE TO INSURE THAT THEY DO NOT IMPACT THE MAJOR ROOT SYSTEMS OF THE TREES TO BE PRESERVED
32. ALL IRRIGATION HEADS SHALL BE LOW-VOLUMN, MIRCO-IRRIGATION TO MINIMIZE WATER CONSUMPTION
33. SET RUN TIMES FOR THE SYSTEM PER RECOMMENDATIONS BY IFAS @ EDIS/IFAS.UFL.EDU/AE210
34. ON HEADS LOCATED BELOW THE VALVE LOCATIONS, INSURE CHECK VALVES ARE INSTALLED AT THE HEAD
35. POP-UP HEIGHTS WITHIN SHRUB AREAS SHALL BE SET AT 4" ALONG CURBING
36. POP-UP HEIGHTS WITHIN SOD AREAS SHALL BE SET AT 6"
37. ALL VALVES SHALL HAVE A FACTORY-INSTALLED 'FILTER SENTRY' AND VERIFIED BY CONTRACTOR
38. WHERE HEADS ARE LOCATED WITHIN PLANTING BEDS, SET HEADS ON RISERS AT DESIGN HEIGHT OF MATERIAL
39. ALL RISERS USED SHALL BE PAINTED DARK BROWN AS APPROVED BY LANDSCAPE ARCHITECT

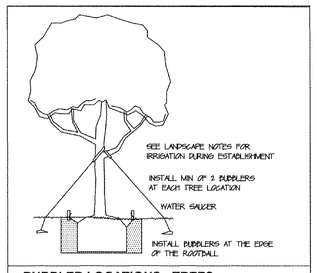

BUBBLER LOCATIONS - TREES N.T.S.

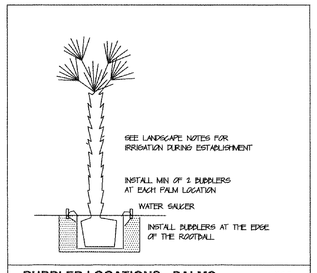

BUBBLER LOCATIONS - PALMS N.T.S.

SCALE 1" = 20'

0 5 10 15 25 50 75

N

RICHARD A KESSELRING JR., PLA, ASLA
LANDSCAPE ARCHITECT , STATE OF FLORIDA #858

NO.	DATE	DESCRIPTION	BY

DRAWN BY: RAK
DATE: 3 / 14
SCALE: 1" = 20'
DRAWING NO.:
VIEW NAME:
JOB NO.:
FB:
PG:

ENVIRONMENTAL DESIGN
ANDY KESSELRING, LANDSCAPE ARCHITECT
1920 SE. 8th STREET
OCALA, FLORIDA 34478
P.O. BOX 5121
(352) 622-8899
LANDSCAPE ARCHITECTURE, SITE PLANNING,
GOLF COURSE DESIGN, COMMERCIAL-RESIDENTIAL DESIGN

IRRIGATION PLAN
McDONALD'S RESTAURANT
NEW PORT RICHEY PASCO CO

SHEET ____ of ____