O'Reilly AUTO PARTS

New O'Reilly Auto Parts Store
S.R. 52
HUDSON, FL

OCCUPANCY LOAD SUMMARY

MARK	ROOM	AREA	AREA PER OCCUPANT	OCCUPANTS PER AREA
100	PARTS AREA " A "	3,312 S.F.	30 S.F.	111
101	PARTS AREA " B "	2,103 S.F.	300 S.F.	7
102	OFFICE	72 S.F.	100 S.F.	1
105	PARTS AREA " C "	1,113 S.F.	300 S.F.	4
TOTAL BUILDING OCCUPANCY LOAD				123

SYMBOLS LEGEND

SECTION NUMBER
SECTION / ELEVATION MARK
SHEET NUMBER

DETAIL NUMBER
DETAIL MARK
SHEET NUMBER

WT? WALL TYPE MARK
? DOOR MARK
? WINDOW MARK
GRID MARK

ABBREVIATIONS LEGEND

AFF	ABOVE FINISHED FLOOR	INSUL	INSULATE
AC	ACOUSTICAL	INT	INTERIOR
A/C	AIR CONDITIONING	JST	JOIST
ALT	ALTERNATE	JT	JOINT
AL	ALUMINUM	JNT	JOINT
ALUM	ALUMINUM	KIT	KITCHEN
AB	ANCHOR BOLT	LH	LEFT HAND
ARCH	ARCHITECT (URAL)	LF	LINEAL FOOT
BSMT	BASEMENT	LTL	LENGTH
BRG	BEARING	L	LINTEL
BM	BENCH MARK	LL	LIVE LOAD
BEL	BELOW	MACH	MACHINE
BLK	BLOCK	MH	MANHOLE
BLKG	BLOCKING	MFR	MANUFACTURER
BD	BOARD	MAS	MASONRY
BW	BOTH WAYS	MO	MASONRY OPENING
BOT	BOTTOM	MAX	MAXIMUM
BF	BOTTOM OF FOOTING	MECH	MECHANIC(AL)
BOF	BOTTOM OF FOOTING	MED	MEDIUM
BRK	BRICK	MBR	MODIFIED BITUMEN ROOFING
BLDG	BUILDING	MET	METAL
BUR	BUILT-UP ROOFING	MTL	METAL
CAB	CABINET	M	METER(S)
CLG	CEILING	MWK	MILLWORK
CL	CENTER LINE	MIN	MINIMUM
C/O	CENTER OF	MISC	MISCELLANEOUS
CC	CENTER TO CENTER	MT	MOUNT(ED), (ING)
CLR	CLEAR	NOM	NOMINAL
COL	COLUMN	N	NORTH
CONC	CONCRETE	NIC	NOT IN CONTRACT
CMU	CONCRETE MASONRY UNIT	NTS	NOT TO SCALE
CONST	CONSTRUCTION	OC	ON CENTER(S)
CONTR	CONTRACTOR	OPG	OPENING
CONT	CONTINUOUS	OPH	OPPOSITE HAND
CNTR	COUNTER	OD	OUTSIDE DIAMETER
CFL	COUNTER FLASHING	OO	OUT TO OUT
CSK	COUNTERSUNK	OA	OVERALL
CRS	COURSE(S)	OH	OVERHEAD
CF	CUBIC FOOT	PC	PIECE
CY	CUBIC YARD	PNT	PAINT(ED)
DL	DEAD LOAD	PTD	PAINT(ED)
DEM	DEMOLISH, DEMOLITION	PKG	PARKING
DTL	DETAIL	PLAM	PLASTIC LAMINATE
DIAG	DIAGONAL	PL	PLATE
DIAM	DIAMETER	PWD	PLYWOOD
DIM	DIMENSION	PVC	POLYVINYL CHLORIDE
DR	DOOR	PSF	POUNDS PER SQUARE FT.
DS	DOWN SPOUT	PSI	POUNDS PER SQUARE IN.
D	DRAIN	PT	PRESSURE TREATED
DWG	DRAWING	PL	PROPERTY LINE
DF	DRINKING FOUNTAIN	REM	REMOVE
E	EAST	RET	RETURN
EIFS	EXTERIOR INSULATION AND FINISH SYSTEM	RH	RIGHT HAND
ELEC	ELECTRIC(AL)	RD	ROOF DRAIN
EWC	ELECTRIC WATER COOLER	RFG	ROOFING
EL	ELEVATION	RM	ROOM
ELEV	ELEVATION	RO	ROUGH OPENING
ELEV	ELEVATOR	SNT	SEALANT
EMER	EMERGENCY	SLNT	SEALANT
EQ	EQUAL	SEC	SECTION
EXG	EXISTING	SECT	SECTION
EXIST	EXISTING	SHTHG	SHEATHING
EXP	EXPOSED	SHT	SHEET
EXT	EXTERIOR	SIM	SIMILAR
FOF	FACE OF FINISH	SC	SOLID CORE
FO	FACE OF	S	SOUTH
FOM	FACE OF MASONRY	SF	SQUARE FOOT
FOS	FACE OF STUDS	SI	SQUARE INCH
FIN	FINISH(ED)	SY	SQUARE YARD
FFE	FINISHED FLOOR ELEV.	STD	STANDARD
FFL	FINISHED FLOOR LINE	STO	STORAGE
FE	FIRE EXTINGUISHER	SUS	SUSPENDED
FEC	FIRE EXTINGUISHER CABINET	SYM	SYMMETRY, (ICAL)
FT	FIRE TREATED	TEL	TELEPHONE
FLG	FLASHING	TV	TELEVISION
FLR	FLOOR	THK	THICK(NESS)
FD	FLOOR DRAIN	T&G	TONGUE & GROOVE
FTG	FOOTING	TM	TOP OF MASONRY
FDN	FOUNDATION	TOM	TOP OF MASONRY
FNDN	FOUNDATION	TS	TOP OF STEEL
FUR	FURR(ED(ING)	TOS	TOP OF STEEL
GA	GAGE, GAUGE	TW	TOP OF WALL
GV	GALVANIZED	TOW	TOP OF WALL
GALV	GALVANIZED	TYP	TYPICAL
GC	GENERAL CONTRACT(OR)	UON	UNLESS OTHERWISE NOTED
GL	GLASS, GLAZING	UNO	UNLESS NOTED OTHERWISE
GP	GYPSUM	VERT	VERTICAL
GYP	GYPSUM	VT	VINYL TILE
GWB	GYPSUM WALL BOARD	WSCT	WAINSCOT
HTG	HEATING	WC	WATER CLOSET
HVAC	HEATING-VENTILATING/AIR COND.	WWF	WELDED WIRE FABRIC
HT	HEIGHT	W	WEST
HC	HOLLOW CORE	W	WIDTH, WIDE
HM	HOLLOW METAL	WIN	WINDOW
HK	HOOK(S)	WO	WITHOUT
HOR	HORIZONTAL	W/O	WITHOUT
HB	HOSE BIBB	WD	WOOD
INS	INSULATE(D), (ION)		

OWNER OR TENANT

O'Reilly AUTO PARTS

O'REILLY AUTOMOTIVE STORES, INC. A MISSOURI CORPORATION
(FORMERLY KNOWN AS O'REILLY AUTOMOTIVE, INC.)
CORPORATE OFFICES
233 SOUTH PATTERSON
SPRINGFIELD, MISSOURI 65802
417-862-2674 PHONE

BIDDING INFORMATION
http://www.ipdservices.net/clients/oreilly

*CLICK ON CURRENT PROJECTS LINK LOCATED ON SIGN IN PAGE TO VIEW INVITED GENERAL CONTRACTORS.

ALL SUB-CONTRACTOR BIDS TO BE SUBMITTED TO INVITED GENERAL CONTRACTORS ONLY.

CONTACT OWNERS REPRESENTATIVE FOR PROJECT INFORMATION:

DANIEL HERRON
PROJECT ADMINISTRATOR
417-829-5804

ARCHITECT

CRAIG A. SCHNEIDER, AIA
ARCHITECT
1736 East Sunshine, Suite 417 — 417.862.0558
Springfield, Missouri 65804 — Fax: 417.862.3265
e-mail: architect@esterlyschneider.com

STRUCTURAL ENGINEER

JS Smith Consulting Engineers, P.C.
Florida State Certificate of Authorization No. 26287
Jeffrey S. Smith P.E. 34027
P.O. Box 8102 * JOPLIN, MISSOURI 64802
PHONE: 417-624-0444 * FAX: 417-624-0430

GENERAL NOTES

A. CONTRACT ADMINISTRATION (LIMITED SERVICE): THE ARCHITECT AND/OR ENGINEER OF RECORD INDICATED HEREIN ARE PROVIDING A LIMITED SERVICE AND NOT PROVIDING CONTRACT ADMINISTRATION SERVICES FOR THIS PROJECT WHICH IS THE RESPONSIBILITY OF OTHERS. THE ARCHITECT AND/OR ENGINEER ARE NOT RESPONSIBLE FOR FIELD ACTIVITIES ON THIS PROJECT WITHOUT DIRECT INSPECTION OF THE WORK IN PROGRESS. IF FIELD CONDITIONS ARE UNCOVERED THAT REQUIRE A CHANGE OR ADDITIONAL INFORMATION, THE ARCHITECT AND/OR ENGINEER DOES NOT DELEGATE AUTHORITY TO ANYONE ELSE FOR DETERMINING THE MEANING OF PLANS OR SPECIFICATIONS AS AUTHENTICATED HEREIN.

B. QUALITY STANDARDS AND BUILDING CODES: CONTRACTORS SHALL BE RESPONSIBLE FOR KNOWING THE QUALITY AND PUBLIC SAFETY REGULATIONS SET FORTH IN THE GOVERNING CODES AND OTHER APPLICABLE REGULATIONS OF LOCAL AND STATE AGENCIES HAVING JURISDICTION WHICH GOVERN EACH CONTRACTOR'S WORK.

C. EXISTING CONDITIONS: FIELD VERIFY EXISTING CONDITIONS BY DETAILED INSPECTION PRIOR TO SUBMITTING BID AND BEGINNING WORK. NOTIFY THE ARCHITECT AND/OR ENGINEER OF RECORD IF EXISTING CONDITIONS DEVIATE SUBSTANTIALLY FROM THOSE INDICATED HEREIN.

MECH. / ELEC. ENGINEER

mfec
Malone Finkle Eckhardt & Collins, Inc.
Consulting Engineers — *phone* 417.881.0020
2040 East Sunshine — *fax* 417.881.0053
Springfield, Missouri 65804 — mfec.com

CIVIL ENGINEER

Cardno TBE
380 Park Place Blvd., Suite 300, Clearwater, Florida 33759
www.cardnotbe.com - 727.531.3505
Certificate of Authorization No. 3843

ZONING CODE

ZONING
CLASSIFICATION: C-2 (GENERAL COMMERCIAL)
PROPERTY AREA: (REFER TO SURVEY)

PARKING SUMMARY
PARKING FORMULA: 1 SP. PER 300 GFA
SPACE SIZE: 9' x 20'
SPACES REQUIRED: 24 (7,125 / 300 = 23.75)
SPACES PROVIDED: 40
H.C. SPACES PROVIDED: 2

QUALITY CONTROL

1. REFER TO PROJECT MANUAL, SECTION 01 45 16 - QUALITY CONTROL PROCEDURES, FOR ADDITIONAL REQUIREMENTS.

2. REFER TO STRUCTURAL DRAWINGS FOR SCHEDULE OF SPECIAL INSPECTIONS, IF INDICATED.

3. WHERE REQUIRED, THE OWNER SHALL PROVIDE THE SERVICES OF AN INDEPENDENT TESTING LABORATORY TO PERFORM TESTING AND SPECIAL INSPECTIONS INDICATED.

BUILDING CODE

BUILDING OFFICIAL CONTACT NUMBER: 727-847-8126

COUNTY: PASCO
ZIP CODE: 34669

GOVERNING CODES AND ORDINANCES
BUILDING CODE: 2010 FL BLDG CODE
PLUMBING CODE: 2010 FL PLBG CODE
MECHANICAL CODE: 2010 FL MECH CODE
ELECTRICAL CODE: 2008 NEC
FIRE CODE: 2010 FL FIRE PREV. CODE
ENERGY CODE: 2012 FL ENERGY GAUGE
AMENDING ORDINANCE: PASCO COUNTY CODE

USE GROUP & CONSTRUCTION TYPE
USE GROUP: M (MERCANTILE)
CONSTRUCTION TYPE: II-B (NON-COMBUSTIBLE / UNPROTECTED)

AREA MODIFICATIONS
FRONTAGE INCREASE: NOT APPLIED
AUTOMATIC SPRINKLER INCREASE: NOT PROVIDED

ALLOWABLE HEIGHT & BUILDING AREA
NO. STORIES: 2
AREA: 12,500 S.F.

ACTUAL HEIGHT & BUILDING AREA
NO. OF STORIES: 1 STORY
BUILDING HEIGHT: 19'-0"
GROSS BUILDING AREA: 7,125 SQ. FT.

FIRE PROTECTION SYSTEMS
AUTOMATIC SPRINKLER SYSTEM: NOT REQUIRED
PORTABLE FIRE EXTINGUISHERS: REQUIRED
FIRE ALARM SYSTEM: NOT REQUIRED
AUTOMATIC FIRE DETECTION SYSTEM: NOT REQUIRED

STRUCTURAL DESIGN (RISK CATEGORY II)
(REFER TO STRUCTURAL DRAWINGS)

1. LIVE LOADS
   ROOF: 20 PSF
2. ROOF COLLATERAL LOADS
   A. ARCHITECTURAL/MECHANICAL: 2.5 PSF
   B. SPRINKLER SYSTEM: 0.0 PSF
3. WIND LOADS GCpi = ± 0.18
   BASIC WIND SPEED:
   V_{ASD} = 112 MPH
   V_{ULT} = 145 MPH
   EXPOSURE: C
4. LOAD COMBINATIONS:
   LOAD COMBINATIONS SHALL BE PER THE ABOVE REFERENCED BUILDING CODE.
5. BUILDING DEFLECTION LIMITS:
   (REFERENCED CODE DEFLECTION LIMITS, WHERE MORE STRINGENT CODE DEFLECTION LIMITS APPLY, THEY SHALL SUPERSEDE THE FOLLOWING)
   MAX. ROOF SNOW OR LIVE LOAD: SPAN/240
   MAXIMUM ROOF TOTAL LOAD: SPAN/180

SHEET INDEX

SHEET NUMBER	SHEET NAME
T1	COVER SHEET
SV1	SITE SURVEY (FOR REFERENCE ONLY)
C1	GENERAL NOTES 1
C2	GENERAL NOTES 2
C3	SWPPP
C4	EROSION CONTROL DETAILS
C5	SITE DEMOLITION PLAN
C6	SITE DEVELOPMENT PLAN
C7	SITE GRADING PLAN
C8	SITE UTILITY PLAN
C9	SITE DEVELOPMENT DETAILS
C10	CONSTRUCTION DETAILS 1
C11	CONCRETE JOINT DETAILS 1
C12	CONCRETE JOINT DETAILS 2
C13	CONCRETE PAVEMENT JOINTS
C14	FDOT DETAILS 1
C15	FDOT DETAILS 2
C16	DRAINAGE DETAILS 1
C17	DRAINAGE DETAILS 2
C18	FDOT MOT DETAILS
C19	CROSS SECTIONS
C20	UTILITY DETAILS 1
C21	UTILITY DETAILS 2
C22	UTILITY DETAILS 3
C23	LIFT STATION DETAILS
L1	PLANTING PLAN
L2	IRRIGATION PLAN
L3	DETAILS
L4	IRRIGATION DETAILS
S1	STRUCTURAL NOTES
S2	FOUNDATION PLAN
S3	DETAILS
S4	DETAILS
A1	FLOOR PLAN
A2	DOOR AND WINDOW SCHEDULE
A3	EXTERIOR ELEVATIONS
A4	WALL SECTIONS
A5	INTERIOR ELEVATIONS
F1	FINISH PLAN
SL1	SITE ELECTRICAL PLAN
P1	PLUMBING PLAN
M1	HVAC PLAN
M2	HVAC SCHEDULES
E1	LIGHTING PLAN
E2	POWER PLAN
E3	ELECTRICAL SCHEDULES
VS1	EMS DETAILS
VS2	EMS DETAILS

CRAIG A. SCHNEIDER, AIA
ARCHITECT
1736 East Sunshine, Suite 417
Springfield, Missouri 65804
417.862.0558
Fax: 417.862.3265
e-mail: architect@esterlyschneider.com

New O'Reilly Auto Parts Store:
S.R. 52
HUDSON, FL

O'Reilly AUTO PARTS
233 SOUTH PATTERSON
SPRINGFIELD, MISSOURI 65802
417-862-2674 PHONE

COMM # 3539

DATE: 3-21-14
REVISION DATE:

MAP OF BOUNDARY & TOPOGRAPHIC SURVEY

TREE CHART

No.	TYPE	SIZE	No.	TYPE	SIZE	No.	TYPE	SIZE	No.	TYPE	SIZE	No.	TYPE	SIZE	No.	TYPE	SIZE
1	OAK	21"	11	OAK	13"	21	OAK	15"	31	CAMPHOR	7"	41	OAK	16"	51	OAK	12"
2	OAK	23"	12	CHERRY	16"	22	PINE	12.5"	32	OAK	16.5"	42	OAK	14.5"	52	PINE	12"
3	OAK	15"	13	OAK	14"	23	OAK	12.5"	33	CHERRY	9.5"	43	OAK	22.5"	53	OAK	9"
4	OAK	20.5"	14	OAK	10"	24	OAK	22"	34	OAK	12"	44	OAK	28"	54	PINE	12"
5	OAK	15.5"	15	OAK	15"	25	OAK	22"	35	OAK	42"	45	OAK	13"	55	OAK	12"
6	OAK	5"	16	OAK	13"	26	OAK	18.5"	36	OAK	16.5"	46	OAK	11.5"			
7	OAK	10"	17	OAK	19.5"	27	OAK	11.5"	37	OAK	23.5"	47	CAMPHOR	11"			
8	OAK	14"	18	OAK	5.5"	28	OAK	17"	38	OAK	14"	48	CAMPHOR	15"			
9	OAK	22.5"	19	OAK	9"	29	OAK	23.5"	39	OAK	14.5"	49	OAK	6"			
10	OAK	23.5"	20	OAK	10"	30	CAMPHOR	7"	40	OAK	14.5"	50	OAK	14"			

TREES 1–50 DELINEATED BY NATIVE FLORIDA LANDSCAPES.
COPY OF REPORT PROVIDED SEPARATELY.

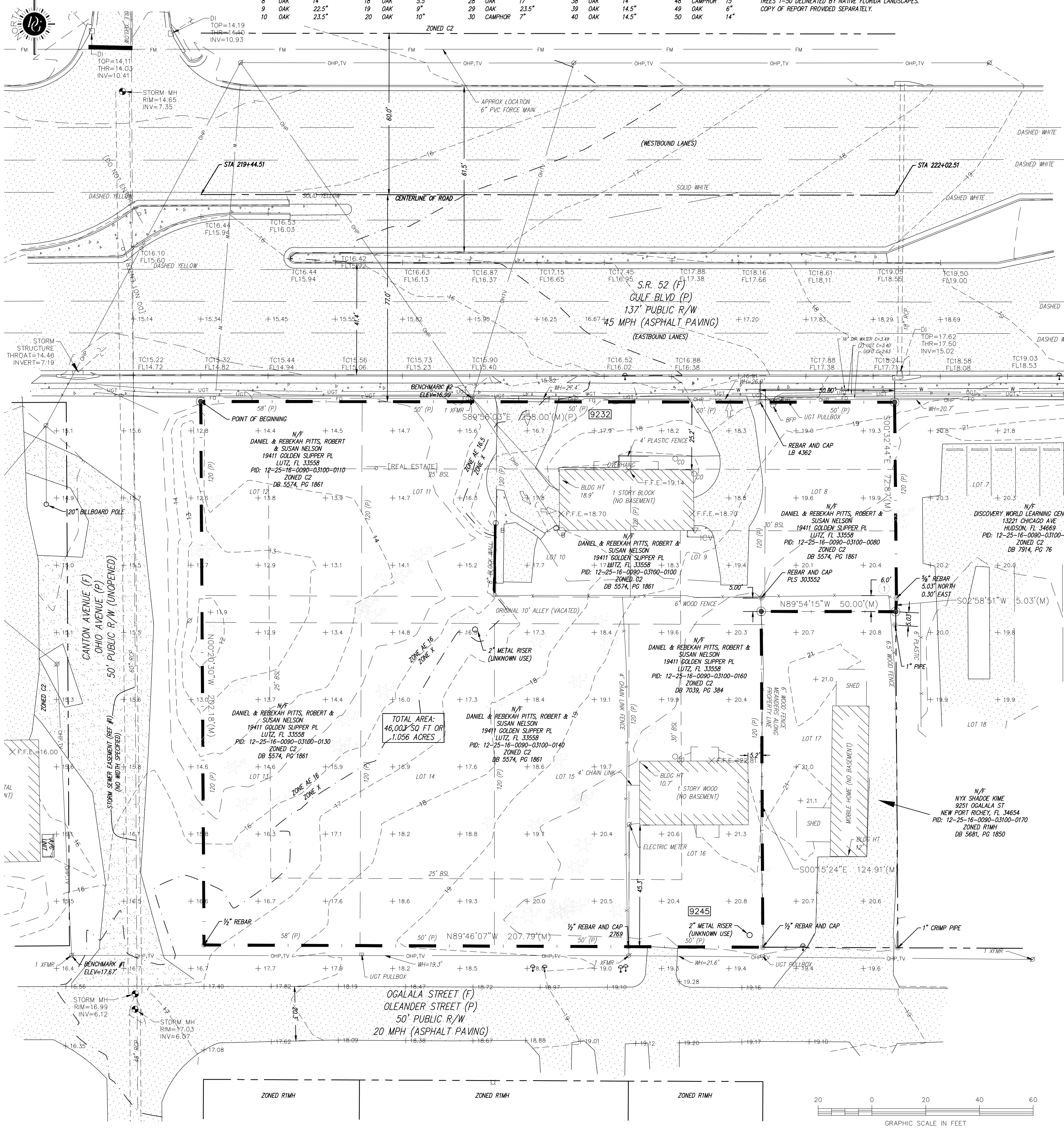

RECORD LEGAL DESCRIPTION

LOTS 8, 9, 10, 11, 12, 13, 14, 15 AND 16, BLOCK 31, GRIFFIN PARK SUBDIVISION, CITY OF FIVAY, ACCORDING TO THE PLAT THEREOF RECORDED IN PLAT BOOK 2, PAGE 78 AND 78A, PUBLIC RECORDS OF PASCO COUNTY, FLORIDA, LESS AND EXCEPT THOSE PORTIONS LYING WITHIN THE RIGHT OF WAY FOR STATE ROAD 52, AS NOW ESTABLISHED; TOGETHER WITH THAT PORTION OF THE VACATED ALLEY LYING BETWEEN LOTS 12 AND 13, BETWEEN LOTS 11 AND 14, BETWEEN LOTS 10 AND 15, AND BETWEEN LOTS 9 AND 16 AND THE NORTH ½ OF THE VACATED ALLEY SOUTH OF LOT 8, ALL OF BLOCK 31, PF SAID GRIFFIN PARK SUBDIVISION, ACCORDING TO THE PLAT THEREOF RECORDED IN PLAT BOOK 2, PAGE 78 AND 78A, PUBLIC RECORDS OF PASCO COUNTY, FLORIDA.

SURVEY LEGAL DESCRIPTION

ALL THAT TRACT OR PARCEL OF LAND LYING AND BEING LOCATED SECTION 12, TOWNSHIP 25 SOUTH, RANGE 16 EAST, PASCO COUNTY FLORIDA, BEING MORE PARTICULARLY DESCRIBED AS FOLLOWS:
BEGIN AT AN IRON PIN SET LOCATED AT THE RIGHT OF WAY INTERSECTION OF THE SOUTHERN RIGHT OF WAY LINE OF SR 52 (137' R/W) AND THE EASTERN RIGHT OF WAY LINE OF CANTON AVENUE (50' R/W UNOPENED); THENCE ALONG THE RIGHT OF WAY LINE OF SR 52 S89°56'03"E 258.00' TO AN IRON PIN SET; THENCE LEAVING SAID RIGHT OF WAY, S00°32'44"E 72.87' TO AN IRON PIN FOUND; THENCE S02°58'51"W 5.03' TO AN IRON PIN SET ON THE CENTERLINE OF A VACATED 10' ALLEY; THENCE ALONG THE CENTERLINE OF SAID ALLEY N89°54'15"W 50.00' TO AN IRON PIN SET; THENCE LEAVING THE CENTERLINE OF THE VACATED ALLEY S00°15'24"E 124.91' TO AN IRON PIN FOUND ON THE NORTHERN RIGHT OF WAY LINE OF OGALALA STREET (50' R/W); THENCE ALONG SAID RIGHT OF WAY N89°46'07"W 207.79' TO AN IRON PIN FOUND AT THE INTERSECTION OF THE NORTHERN RIGHT OF WAY OF OGALALA STREET AND THE EASTERN RIGHT OF WAY LINE OF CANTON AVENUE (50' R/W UNOPENED); THENCE LEAVING THE RIGHT OF WAY OF OGALALA STREET AND ALONG THE RIGHT OF WAY OF CANTON AVENUE N00°20'30"W 202.18' TO AN IRON PIN SET AND THE POINT OF BEGINNING.
SAID TRACT OF LAND CONTAINS 46,003 SQUARE FEET OR 1.056 ACRES MORE OR LESS.

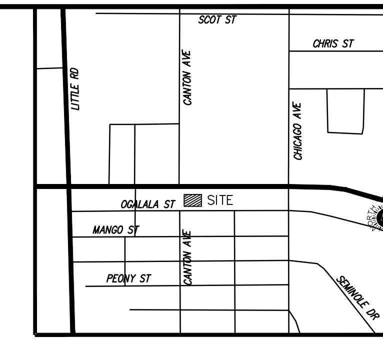

VICINITY MAP
N.T.S.

ZONING INFORMATION

ZONING AUTHORITY: PASCO COUNTY PLANNING AND DEVELOPMENT
ADDRESS: 8731 CITIZENS DR
NEW PORT RICHEY, FL 34654
TELEPHONE: 727-847-8193
CONTACT: RICHARD E. GEHRING, ADMINISTRATOR
ZONING: C2
SETBACKS:
FRONT: 25'
SIDE: 30' ADJOINING RESIDENTIAL, 0' ADJOINING COMMERCIAL
REAR: 30' ADJOINING RESIDENTIAL, 0' ADJOINING COMMERCIAL
MAX HEIGHT: 60'

STREET INFORMATION

S.R 52
OPERATING AUTHORITY: FLORIDA DEPARTMENT OF TRANSPORTATION
DISTRICT 7
11201 N. MALCOLM McKINLEY DR.
TAMPA, FL 33612
813-975-6000
SPEED LIMIT: 45 MPH
CLASSIFICATION: ARTERIAL
OGALALA STREET
OPERATING AUTHORITY: PASCO COUNTY PUBLIC WORKS
7536 STATE STREET, SUITE 140
NEW PORT RICHEY, FL 34654
727-847-8143
SPEED LIMIT: 20 MPH
CLASSIFICATION: NONE
CANTON AVENUE
OPERATING AUTHORITY: PASCO COUNTY PUBLIC WORKS
7536 STATE STREET, SUITE 140
NEW PORT RICHEY, FL 34654
727-847-8143
SPEED LIMIT: NONE
THIS STREET IS PLATTED AS A RIGHT OF WAY HOWEVER IS NOT MAINTAINED BY PASCO COUNTY PUBLIC WORKS

UTILITY CONTACTS

WATER & SANITARY SEWER
AUTHORITY: PASCO COUNTY UTILITIES
ADDRESS: 7530 LITTLE ROAD, SUITE 205
NEW PORT RICHEY, LF 34654
CONTACT: PAUL HAMAR
PHONE #: 727-847-8145

TELEPHONE
AUTHORITY: VERIZON FLORIDA INC
ADDRESS: 1909 U.S. HWY 301 N
TAMPA, FL 33619
CONTACT: DAVID WYNNS
PHONE#: 813-627-8343

POWER
AUTHORITY: WITHLACOOCHEE RIVER ELECTRIC COOPERATIVE
ADDRESS: 12013 HAYS BLVD
SHADY HILLS, FL 34610
CONTACT: JEFF RATLIFF
PHONE #: 727-868-9465

BENCHMARK INFORMATION

1. RAIL ROAD SPIKE IN POWER POLE LOCATED AT THE RIGHT OF WAY INTERSECTION OF THE NORTHERN RIGHT OF WAY LINE OF OGALALA STREET AND THE WESTERN RIGHT OF WAY LINE OF CANTON AVENUE. ELEVATION = 17.67'
2. 60D NAIL IN POWER POLE LOCATED ON THE SOUTHERN RIGHT OF WAY LINE OF SR 52. ELEVATION = 16.99'

FLOOD ZONE

ACCORDING TO FEDERAL EMERGENCY MANAGEMENT AGENCY (FEMA) FLOOD INSURANCE RATE MAPS (FIRM), COMMUNITY PANEL NO. 120230 0185 D EFFECTIVE DATE: SEPTEMBER 30, 1992, A PORTION OF THE SUBJECT PROPERTY IS LOCATED WITHIN ZONE "AE 16"; BASE FLOOD ELEVATIONS DETERMINED.

ENCROACHMENTS

1. WOOD FENCE ENCROACHES THE SUBJECT PROPERTY 6.0' ALONG THE SOUTHERN LINE OF LOT 8.

LEGEND

PROPERTY LINE	
ADJACENT PROPERTY LINE	
EASEMENT LINE	
CONTOUR LINE	100
BUILDING SETBACK LINE	BSL
WATER LINE	W
FENCE LINE (TYPE NOTED)	X
OVERHEAD POWER LINE	OHP
OVERHEAD TELEPHONE LINE	OHT
FORCE MAIN	FM
UNDERGROUND TELEPHONE LINE	UGT
STORM SEWER LINE	
IRRIGATION CONTROL VALVE	ICV
UTILITY POLE	
LIGHT POLE	
WIRE HEIGHT	WH
MANHOLE	
SIGN	
IRON PIN FOUND (AS NOTED)	
1/2" REBAR W/ CAP SET (LB 6552)	
CLEANOUT	CO
BOLLARD	B
STREET ADDRESS	102
ENCROACHMENT	1
TREE (SEE CHART FOR TYPE)	
SPOT ELEVATION	+ 101.2
MAIL BOX	
CONCRETE	
ASPHALT	

R/W	RIGHT OF WAY	(P)	PLAT
PID	PARCEL IDENTIFICATION NUMBER	(F)	FOUND
DB	DEED BOOK	BFP	BACK FLOW PREVENTER
PG	PAGE	XFMR	POWER TRANSFORMER
N/F	NOW OR FORMERLY	BLDG HT	BUILDING HEIGHT
F.F.E.	FINISHED FLOOR ELEVATION	(M)	MEASURED
RCP	REINFORCED CONCRETE PIPE		
BSL	BUILDING SETBACK LINE		
CMF	CONCRETE MONUMENT FOUND		

NOTES

1. DONALDSON, GARRETT AND ASSOCIATES, INC. AND THE LAND SURVEYOR WHOSE SEAL IS AFFIXED HEREON DO NOT GUARANTEE THAT ALL EASEMENTS WHICH MAY AFFECT THIS PROPERTY ARE SHOWN.
2. THIS DRAWING HAS BEEN GENERATED ELECTRONICALLY. THIS MEDIA SHOULD NOT BE CONSIDERED A CERTIFIED DOCUMENT UNLESS IT BEARS THE ORIGINAL RAISED SEAL AND SIGNATURE OF A FLORIDA REGISTERED PROFESSIONAL SURVEYOR AND MAPPER OF DONALDSON, GARRETT AND ASSOCIATES, INC.
3. THE LOCATION OF THE UNDERGROUND UTILITIES SHOWN ON THIS DRAWING ARE APPROXIMATE AND WERE COMPILED FROM FIELD OBSERVATIONS AND/OR INFORMATION PROVIDED BY THE LOCAL UTILITY AUTHORITIES. THIS INFORMATION MAY BE INACCURATE OR INCOMPLETE. VERIFICATION OF THE UTILITY LOCATIONS SHOULD BE MADE PRIOR TO ANY CONSTRUCTION. SUNSHINE STATE ONE CALL DESIGN TICKET NO. 071306671.
4. SUBJECT PROPERTY IS LOCATED IN UNINCORPORATED PASCO COUNTY. FLORIDA.
5. THE SUBJECT PROPERTY HAS MULTIPLE ADDRESSES.
6. ELEVATIONS SHOWN ARE NAVD 88 DATUM, BASED UPON NGS MONUMENT DESIGNATION Z 659 LOCATED NEAR THE INTERSECTION OF SR 52 AND CHICAGO AVENUE. TO CONVERT TO NGVD 29 DATUM, ADD 0.84 TO THE VALUES SHOWN HEREON.
7. THE FIELD SURVEY WAS COMPLETED ON 2-25-2013.
8. THE BASIS OF BEARING FOR THIS SURVEY IS THE SOUTH RIGHT OF WAY LINE OF SR 52 AS SHOWN ON RIGHT OF WAY MAP FOR SR 52 STATE PROJECT NUMBER 14120-2521.
9. PER MIKE KIRKPATRICK, PASCO COUNTY UTILITIES (727-847-8145 EXT 8740, THE WATER LINE IN THIS AREA IS APPROXIMATELY 3 ½' TO 4' DEEP.
10. PER RICHARD ZIEGLER, PASCO COUNTY PUBLIC WORKS (727-847-8143), THERE ARE NO CONSTRUCTION OR RIGHT OF WAY WIDENING PROJECT FOR OGALALA STREET IN THIS AREA AT THIS TIME.
11. PER KRIS CARSON, FDOT DISTRICT 7, (813)-975-6060, THERE IS NO PLANNED CONSTRUCTION OR RIGHT OF WAY WIDENING FOR S.R. 52 IN THIS AREA AT THIS TIME.
12. PER PAUL HAMAR, PASCO COUNTY UTILITIES (727-847-8145) THE SUBJECT PROPERTY WILL NEED TO TIE INTO THE SEWER LIFT STATION LOCATED APPROXIMATLEY 130' TO THE EAST FOR SEWER SERVICE.
13. PER DIANE HICKS, PASCO COUNTY (727-847-8126) THE BASE FLOOD ELEVATION FOR THE SUBJECT PROPERTY IS 16.5', THE MINIMUM FINISHED FLOOR ELEVATION FOR NEW STRUCTURES IS 17.5'

SCHEDULE B SECTION II

FIDELITY NATIONAL TITLE INSURANCE COMPANY
CUSTOMER REFERENCE NUMBER: 1312212CTN
EFFECTIVE DATE: JANUARY 22, 2013 @ 8:00 A.M.

7. RESTRICTIONS, COVENANTS, CONDITIONS, EASEMENTS AND OTHER MATTERS AS CONTAINED ON THE PLAT OF GRIFFIN PARK SUBDIVISION, CITY OF FIVAY, RECORDED IN PLAT BOOK 2, PAGE 78 & 78A, OF THE PUBLIC RECORDS OF PASCO COUNTY, FLORIDA. APPLICABLE MATTERS SHOWN HEREON.

REFERENCES

1. RIGHT OF WAY MAP FOR SR 52, PROJECT NUMBER 14120-2521, DATED 3-14-89.

SURVEYOR CERTIFICATION

TO O'REILLY AUTOMOTIVE STORES, INC, A MISSOURI CORPORATION AND FIDELITY NATIONAL TITLE GROUP:

THIS IS TO CERTIFY THAT THIS MAP OR PLAT AND THE SURVEY ON WHICH IT IS BASED WERE MADE IN ACCORDANCE WITH THE 2011 MINIMUM STANDARD DETAIL REQUIREMENTS FOR ALTA/ACSM LAND TITLE SURVEYS, JOINTLY ESTABLISHED AND ADOPTED BY ALTA AND NSPS, AND INCLUDES ITEMS 1-5, 7a, 7c, 8-9, 11a, 13-14 & 17 OF TABLE A THEREOF. THE FIELD WORK WAS COMPLETED ON 2-25-2013.

"I HEREBY CERTIFY THAT THIS SURVEY WAS MADE UNDER MY RESPONSIBLE CHARGE AND MEETS THE MINIMUM TECHNICAL STANDARDS SET FORTH BY THE FLORIDA BOARD OF PROFESSIONAL LAND SURVEYORS IN CHAPTER 61G17-6 FL. AD. CODE, SECTION 472.027, FL. STATUTES."

JAMES W. NEWBERRY DATE
P.S.M.# 5788, STATE OF FLORIDA

DONALDSON, GARRETT, & ASSOCIATES, INC.
MACON ● CHARLOTTE
4875 RIVERSIDE DRIVE P.O. BOX 7306
MACON, GA 31210
(478)474-5350 Fax: (478) 477-2534
http://www.dg-a.com
FL CERTIFICATE OF AUTHORIZATION NO. LB 6552

ALTA/ACSM LAND TITLE SURVEY
FOR
O'REILLY AUTOMOTIVE STORES, INC.
9232 S.R. 52
SECTION 12, TOWNSHIP 25 SOUTH, RANGE 16 EAST
PASCO COUNTY FLORIDA

DATE	REVISIONS
4-4-2013	CLIENT COMMENTS
4-22-2013	ADD'L TOPOGRAPHIC SURVEY & LEGAL COMMENTS
5-30-2013	REVISE WATER LINE LOCATION

THESE DOCUMENTS, AS INSTRUMENTS OF SERVICE, REMAIN THE PROPERTY OF D, G & A AND NO PART THEREOF MAY BE USED OR REPRODUCED IN ANY FORM WITHOUT WRITTEN PERMISSION.

SCALE:
HORIZONTAL: 1" = 20'
VERTICAL: N/A

DATE:	3-19-2013
DRAWING #:	3213-13-D
PROJ. #:	4539-314-D1
DSGN:	
DRWN:	BCR
CHKD:	JWN
APVD:	
PLS No:	5788

SV1

SHEET 1 OF 1

GENERAL NOTES

1. ALL WORKMANSHIP AND MATERIALS USED IN THE CONSTRUCTION OF THIS PROJECT SHALL CONFORM TO FDOT "STANDARD SPECIFICATIONS FOR ROAD AND BRIDGE CONSTRUCTION," LATEST EDITION, AND THE LATEST LOCAL GOVERNMENT AGENCY UTILITIES AND FDOT STANDARDS, DETAILS AND SPECIFICATIONS UNLESS OTHERWISE INDICATED.
2. THE ELEVATIONS SHOWN HEREON ARE BASED ON NAVD 1988 DATUM. REFER TO SURVEY PREPARED BY DONALDSON, GARRETT, AND ASSOCIATES, INC. DATED 7-27-2011.
3. IT IS THE RESPONSIBILITY OF THE CONTRACTOR TO USE WHATEVER MEANS NECESSARY TO CONTROL AND PREVENT EROSION AND TRANSPORT OF SEDIMENT TO SURFACE DRAINS AND DURING CONSTRUCTION. SEE EROSION CONTROL NOTES AND STORMWATER POLLUTION PREVENTION PLAN FOR ADDITIONAL INFORMATION.
4. THE CONTRACTOR IS SOLELY RESPONSIBLE FOR CONSTRUCTION SAFETY. SPECIAL PRECAUTIONS MAY BE REQUIRED IN THE VICINITY OF POWER LINES AND OTHER UTILITIES.
5. THESE DRAWINGS DO NOT INCLUDE NECESSARY COMPONENTS FOR CONSTRUCTION SAFETY. THE CONTRACTOR IS SOLELY RESPONSIBLE FOR MEANS AND METHODS FOR CONSTRUCTION SAFETY.
6. ALL WORK PERFORMED SHALL COMPLY WITH THE REGULATIONS AND ORDINANCES OF THE VARIOUS GOVERNMENTAL AGENCIES HAVING JURISDICTION OVER THE WORK.
7. ALL CONCRETE SHALL HAVE A MINIMUM ULTIMATE COMPRESSIVE STRENGTH OF 4,000 PSI (28 DAY STRENGTH), UNLESS OTHERWISE NOTED.
8. ALL DISTURBED GRASSED AREAS SHALL BE RESODDED WITHIN 72 HOURS UNLESS OTHERWISE INDICATED.
9. CONTRACTOR TO RESTORE ALL AREAS DISTURBED BY HIS OPERATION TO THEIR ORIGINAL OR BETTER CONDITION.
10. THE CONTRACTOR WILL BE RESPONSIBLE FOR MAKING A VISUAL INSPECTION OF THE SITE AND WILL BE RESPONSIBLE FOR THE DEMOLITION AND REMOVAL OF ALL UNDERGROUND AND ABOVE GROUND IMPROVEMENTS THAT WILL NOT BE INCORPORATED WITH THE NEW FACILITIES TO THE PROPERTY LINE AT A MINIMUM. SHOULD ANY DISCREPANCIES EXIST WITH THE PLANS, THE CONTRACTOR SHALL BE RESPONSIBLE FOR CALLING THE ENGINEER AND REQUESTING A CLARIFICATION OF PLANS PRIOR TO DEMOLITION.
11. CONTRACTOR SHALL BE RESPONSIBLE FOR OBTAINING ANY AND ALL REQUIRED ROAD CROSSING PERMITS, AND OTHER CONSTRUCTION PERMITS NOT FURNISHED BY THE OWNER, PRIOR TO THE START OF ANY CONSTRUCTION OR DEMOLITION.
12. SPECIAL CARE IS TO BE TAKEN SO THAT PROTECTED TREES REMAIN UNHARMED DURING CONSTRUCTION. IN ANY EVENT, NO TREE(S) SHALL BE REMOVED UNLESS DESIGNATED FOR REMOVAL ON THE PLANS.
13. REFERENCED INDEX NUMBERS REFER TO FLORIDA DEPARTMENT OF TRANSPORTATION ROAD DESIGN STANDARDS, LATEST EDITION.
14. ALL SODDING, SEEDING AND MULCHING SHALL INCLUDE WATERING AND FERTILIZATION AND SHALL BE IN ACCORDANCE WITH LOCAL GOVERNMENT AGENCY LAND DEVELOPMENT CODE. THE CONTRACTOR SHALL BE RESPONSIBLE FOR MAINTAINING THESE AREAS UP TO AND INCLUDING THE INITIAL MOWING.
15. CONTRACTOR IS ADVISED TO BECOME FAMILIAR WITH THE OVERALL SCOPE OF WORK TO BE PERFORMED PRIOR TO CONSTRUCTION.
16. THE CONTRACTOR SHALL PROVIDE CERTIFIED STORMWATER RECORD DRAWINGS (AS-BUILTS), SIGNED AND SEALED BY A PROFESSIONAL LAND SURVEYOR LICENSED IN THE STATE OF FLORIDA PRIOR TO CERTIFICATION BY THE ENGINEER OF RECORD. THE RECORD DRAWINGS SHALL SHOW FINAL GRADES AND LOCATIONS ON ALL STORMWATER FACILITIES, DRAINAGE STRUCTURES, BERMS & SWALES. THE RECORD DRAWINGS MUST COMPLY WITH THE SOUTHWEST FLORIDA WATER MANAGMENT DISTRICT'S (SWFWMD) "AS-BUILT" DRAWINGS AND INFORMATION CHECKLIST, FORM 547.27/SOC (4/09) PER SWFWMD RULE 40D-4.351(2)(a)1.,F.A.C. THE CONTRACTOR SHALL PROVIDE TEN (10) COPIES OF THE CERTIFIED RECORD DRAWINGS TO THE ENGINEER OF RECORD FOR THE PURPOSE OF CERTIFYING THE STORMWATER MANAGEMENT SYSTEM.
17. THE CONTRACTOR SHALL LOCATE AND STAKE ALL PROPERTY CORNERS PRIOR TO FINAL ENGINEERING INSPECTION AND CERTIFICATION. IT SHALL BE THE CONTRACTORS RESPONSIBILITY TO RE-ESTABLISH THE PROPERTY CORNERS WHICH HAVE BEEN LOST DURING CONSTRUCTION BY A PROFESSIONAL LAND SURVEYOR.
18. WORK SHALL NOT COMMENCE UNTIL ALL PERMITS REQUIRED FOR THE SUBJECT PORTION OF THE PROJECT ARE OBTAINED. IT IS THE CONTRACTOR'S RESPONSIBILITY TO HAVE ALL REQUIRED PERMITS AND/OR EVIDENCE OF COMPLIANCE WITH APPLICABLE REGULATIONS ON SITE AT ALL TIMES DURING THE EXECUTION OF WORK. SPECIFIC PERMITS MAY BE REQUIRED FOR THE INSTALLATION OF POTABLE WATER LINES, SANITARY SEWER LINES, STORMWATER PIPES, ETC. TREE BARRICADES AND EROSION SILTATION CONTROL MUST BE INSTALLED AND MAINTAINED PRIOR TO COMMENCING CONSTRUCTION.
19. CONSTRUCTION SHALL PROCEED SUCH THAT ALL STORMWATER FACILITIES WITHIN A WATERSHED AREA ARE IN PLACE AND OPERATIONAL PRIOR TO DEMOLITION AND/OR CONSTRUCTION OF IMPERVIOUS SURFACES WITHIN THAT AREA (IF APPLICABLE).
20. NO STOCKPILING OF MATERIALS IN ROADWAY ROW OR ON SIDEWALK. ROW, ROADS AND SIDEWALKS TO BE SWEPT DAILY AS PART OF DAILY CLEAN UP.
21. CONTRACTOR IS TO EXERCISE CAUTION IN THE VICINITY OF TREES TO REMAIN AND IS RESPONSIBLE FOR ANY DAMAGE RESULTING FROM HIS WORK.
22. GENERAL CONTRACTOR SHALL COORDINATE LOCATION AND INSTALLATION OF ELECTRICAL SERVICE EQUIPMENT IN ACCORDANCE WITH THE LOCAL AUTHORITY HAVING JURISDICTION.
23. CONTRACTOR TO FAMILIARIZE THEMSELVES WITH THE PROJECT GEOTECHNICAL REPORT AND ADHERE TO THE RECOMMENDATIONS FOR PAVEMENT SECTIONS AND ANY OTHER RECOMMENDATIONS RELATED TO CONSTRUCTION OF THIS PROJECT.
24. CONTRACTOR SHALL BECOME FAMILIAR WITH WATER MANAGEMENT DISTRICT PERMIT, FDEP NOTICE OF INTENT, FDEP GENERIC PERMIT FOR STORMWATER DISCHARGE FROM LARGE AND SMALL CONSTRUCTION ACTIVITIES, PROJECT STORMWATER POLLUTION PREVENTION PLAN (ATTACHED), RIGHT-OF-WAY, UTILITY, AND ALL PERMITS ASSOCIATED WITH THE PROJECT.
25. ALL NOTES APPLY TO ALL SHEETS WHERE APPLICABLE.

WATER SYSTEM TESTING AND INSPECTION REQUIREMENT NOTES

1. ALL COMPONENTS OF THE WATER SYSTEM, INCLUDING FITTINGS, THRUST BLOCKING, HYDRANTS, CONNECTIONS, AND VALVES SHALL REMAIN UNCOVERED UNTIL PROPERLY PRESSURE TESTED AND ACCEPTED BY THE OWNER'S ENGINEER. PRESSURE TESTS TO BE IN ACCORDANCE WITH OWNING UTILITY SPECIFICATIONS.CONTRACTOR TO NOTIFY OWNER'S ENGINEER AND OWNING UTILITY INSPECTORS 48 HOURS IN ADVANCE OF PERFORMING TESTS.
2. INSPECTION BY THE BUILDING DEPARTMENT MAY BE REQUIRED AND MUST COMPLY WITH FLORIDA BUILDING CODE (FBC). THESE FBC COMPLIANCE INSPECTIONS ARE LIMITED TO THE DOWNSTREAM SIDE OF BACKFLOW PREVENTORS TO THE BUILDING.

TESTING REQUIREMENTS

CONTRACTOR IS REQUIRED TO PROVIDE ALL TESTING IN ACCORDANCE WITH LATEST EDITION OF LOCAL GOVERNMENT AGENCY AND FDOT DESIGN MANUALS AND SPECIFICATIONS, IN ADDITION TO THOSE STATED WITHIN THE CONSTRUCTION DOCUMENTS AND SPECIFICATIONS FOR THIS PROJECT. TESTING TO INCLUDE, BUT NOT LIMITED TO ALL REQUIRED COMPACTION TESTING, BORINGS, ASPHALT GRADATION, EXTRACTION TESTS, CORES, AND CONCRETE TESTING, ETC.

GENERAL UTILITY NOTES

1. EXCEPT WHERE THE PLANS AND SPECIFICATIONS PROVIDE THAT SUCH WORK SHALL BE PERFORMED UNDER THE CONTRACT FOR THIS PROJECT, ALL UTILITIES INTERFERING WITH CONSTRUCTION SHALL BE REMOVED, RELOCATED, OR ADJUSTED BY THEIR OWNERS, AT THEIR EXPENSE. THE CONTRACTOR SHALL ARRANGE HIS SCHEDULE TO ALLOW UTILITY OWNERS TIME FOR THE NECESSARY RELOCATION AND ADJUSTMENT OF UTILITIES AND RELATED STRUCTURES.
2. ABOVE GROUND AND/OR UNDERGROUND UTILITIES MAY BE IN THE AREA OF THIS PROJECT - PROCEED WITH CAUTION - THE CONTRACTOR SHALL CALL "SUNSHINE STATE ONE CALL" AND THE UTILITY OWNERS IN ADVANCE OF BEGINNING WORK, IN ACCORDANCE WITH CHAPTER 556, FLORIDA STATUTES, UNDERGROUND FACILITY DAMAGE PREVENTION & SAFETY. ALL UTILITY OWNERS MAY NOT BE A MEMBER, REQUIRING DIRECT CONTACT. THE CONTRACTOR SHALL FURTHER COORDINATE WITH UTILITY OWNERS TO RESOLVE CONFLICTS THAT MAY ARISE IN THE FIELD DURING CONSTRUCTION. THE CONTRACTOR WILL BE RESPONSIBLE FOR ANY UTILITIES DAMAGED AS A RESULT OF THE CONTRACTOR'S FAILURE TO CALL "SUNSHINE STATE ONE CALL" AND THE UTILITY OWNERS.
3. THE CONTRACTOR IS REQUIRED TO COORDINATE AND/OR PROVIDE FOR THE BRACING/SUPPORT OF EXISTING UTILITY POLES WITH THE UTILITY OWNERS, PRIOR TO THE COMMENCEMENT OF EXCAVATION/CONSTRUCTION ACTIVITIES.
4. THE CONTRACTOR SHALL PROVIDE TEMPORARY FACILITIES AS REQUIRED TO ISOLATE PIPELINES INSTALLED UNDER THIS CONTRACT FOR THE PERFORMANCE OF TESTING UNDER THIS CONTRACT. LIKEWISE, PROVIDE TEMPORARY FACILITIES AS REQUIRED TO MAINTAIN WASTEWATER SERVICE THROUGHOUT THE CONSTRUCTION PERIOD.
5. ALL EXISTING WATER MAINS, SANITARY SEWER LINES, WATER/SEWER PUMP STATIONS AND OTHER UTILITIES SHALL REMAIN IN SERVICE UNTIL THE RELOCATED UTILITIES ARE PLACED IN SERVICE. COORDINATE ALL UTILITY RELATED CONSTRUCTION ACTIVITIES WITH THE OWNER OF THESE UTILITIES.
6. ALL CONSTRUCTION WITHIN THE RIGHT-OF-WAY WILL BE IN ACCORDANCE WITH THE PRACTICES REQUIRED BY FDOT AND LOCAL GOVERNMENT AGENCY LAND DEVELOPMENT CODE ALONG WITH THE FDOT UTILITY ACCOMMODATION MANUAL.
8. CONTRACTOR WILL NOTIFY THE RESPONSIBLE UTILITY FOR RELOCATION OF METER BOXES FOR POTABLE WATER AND NON-POTABLE WATER SERVICES.
9. THE LOCATIONS AND SIZE OF THE EXISTING UTILITIES AS SHOWN ON THE PLANS ARE APPROXIMATE ONLY. FURTHER, THERE IS NO GUARANTEE THAT ALL EXISTING FACILITIES HAVE BEEN FOUND OR SHOWN. THE CONTRACTOR IS FOREWARNED TO ASCERTAIN AND DETERMINE PRECISE LOCATIONS PRIOR TO EXCAVATING. THE CONTRACTOR SHALL BECOME FAMILIAR WITH ALL VOLTAGES CARRIED IN OVERHEAD OR UNDERGROUND UTILITY SERVICES. NO CLAIM FOR EXTRA COST SHALL BE MADE AGAINST THE OWNER OR ENGINEER AS A RESULT OF THE AFOREMENTIONED APPROXIMATIONS. THE CONTRACTOR SHALL LOCATE EXACTLY ALL UTILITIES THAT CROSS THE PROPOSED PROJECT LIMITS PRIOR TO CONSTRUCTION.
10. THE CONTRACTOR SHALL NOTIFY THE ENGINEER, OWNER, CITY AND COUNTY INCLUDING ALL UTILITY COMPANIES AT LEAST 48 HOURS BEFORE BEGINNING CONSTRUCTION. CONTRACTOR SHALL CALL "SUNSHINE STATE ONE CALL" (811) A MINIMUM OF 2-DAYS AND A MAXIMUM OF 5-DAYS PRIOR TO START OF CONSTRUCTION. CONTRACTOR SHALL NOTIFY AND COORDINATE WATER AND SEWER SERVICES WITH LOCAL GOVERNMENT AGENCY .
11. ALL UNDERGROUND UTILITIES MUST BE INSTALLED BEFORE ROADWAY BASE AND SURFACE ARE CONSTRUCTED.
12. ALL PIPE LENGTHS ARE PLUS OR MINUS.
13. PIPE MEASUREMENTS ARE TO CENTER OF STRUCTURES OR FITTINGS. PIPE MEASUREMENTS FOR MITERED END SECTIONS ARE TO END OF PIPE.
14. CONTRACTOR SHALL VERIFY THE LOCATION AND ELEVATION OF ALL UTILITY CONNECTION POINTS PRIOR TO STARTING CONSTRUCTION AND SHALL IMMEDIATELY NOTIFY THE ENGINEER AND OWNER OF ANY DISCREPANCIES FOUND.
15. ADJUSTMENT OF INLETS, JUNCTION BOXES, MANHOLE TOPS, WATER VALVES, WATER METERS, ETC., SHALL BE INCLUDED AND NO CLAIM SHALL BE MADE AGAINST THE OWNER OR ENGINEER FOR THESE ADJUSTMENTS, IF REQUIRED.
16. ALL BACKFILL OVER ANY PIPE (STORM SEWER, SANITARY SEWER, OR WATERLINES) THAT IS INSTALLED UNDER ROADWAYS OR WITHIN THE EMBANKMENT OF THE ROADWAY, SHALL BE COMPACTED IN ACCORDANCE WITH FLORIDA D.O.T. STANDARD SPECIFICATIONS, SECTION 125-8 (BACKFILLING), LATEST EDITION OR LOCAL GOVERNMENT AGENCY REQUIREMENTS.
17. ALL EXISTING UTILITIES (INCLUDING STORMWATER FACILITIES) SHALL BE KEPT IN OPERATION EXCEPT WITH THE EXPRESS WRITTEN CONSENT OF THE UTILITY OWNER. IT SHALL BE THE CONTRACTOR'S RESPONSIBILITY TO PRESERVE EXISTING UTILITIES AND ANY AND ALL DAMAGE TO EXISTING UTILITIES AS A RESULT OF THE CONTRACTORS ACTIONS SHALL BE REPAIRED AT THE CONTRACTORS EXPENSE.
18. CONTRACTOR TO REPAIR IN KIND ANY DISTURBED AREAS DUE TO UTILITY INSTALLATIONS. CONTRACTOR TO ROOT PRUNE ANY TREES IN VICINITY OF PROPOSED UTILITY INSTALLATIONS.
19. DUCTILE IRON PIPE MUST BE INSTALLED BETWEEN ANY TAP AND BACKFLOW PREVENTER DEVICE. AT LEAST ONE JOINT OF DUCTILE IRON PIPE TO BE INSTALLED ON THE SERVICE SIDE OF ANY BACKFLOW PREVENTER DEVICE.

ELECTRICAL AND TELEPHONE NOTES

1. ALL ELECTRICAL SERVICE SHALL BE INSTALLED UNDERGROUND.
2. ELECTRIC SERVICE TO POINTS OF CONNECTION TO BE PROVIDED BY UTILITY OWNER; CONTRACTOR TO COORDINATE.
3. CONTRACTOR TO INSTALL PVC CONDUITS FOR ELECTRICAL AND TELEPHONE SERVICE (TO PROPERTY LINE) AND COORDINATE INSTALLATION OF SERVICES AND LIGHTING DESIGN WITH UTILITY AGENCY.
4. CONTRACTOR TO COORDINATE WITH UTILITY COMPANY FOR RELOCATION OF ANY POWER POLES WITHIN PROJECT AREA AND RIGHT-OF-WAYS.
5. CONTRACTOR TO EXERCISE EXTREME CARE IN NEW CONSTRUCTION AREAS TO AVOID IMPACTS TO HIGHLY SENSITIVE UTILITIES.

GENERAL SANITARY SEWER NOTES

1. MANHOLES SHALL BE INSPECTED BY THE OWNING UTILITY AND ENGINEER AFTER THE COMPLETION OF ALL BASE WORK, AND PRIOR TO SURFACE TREATMENT.
2. ALL OPENINGS IN PRE-CAST MANHOLES SHALL BE CAST AT TIME OF MANUFACTURE. CONNECTIONS TO EXISTING MANHOLES SHALL BE CORE ENTRY ONLY.
3. ALL MANHOLES SHALL BE SET PLUMB TO LINE AND GRADE AN SHOWN ON PLANS.
4. ALL P.V.C. GRAVITY SEWER MAINS SHALL CONFORM TO A.S.T.M. D-3034, S.D.R.-26, LATEST REVISIONS, WITH PUSH-ON RUBBER GASKET JOINTS.
5. ALL D.I.P. GRAVITY SEWER PIPES SHALL BE CLASS 52, EPOXY LINED OR AS OTHERWISE APPROVED BY THE ENGINEER.
6. NO SERVICE CONNECTIONS, WYES, SERVICES OR VALVES WILL BE PERMITTED IN RESIDENTIAL DRIVEWAYS, EXCEPT UPON APPROVAL OF THE OWNING UTILITY OR ENGINEER.
7. MANHOLE FRAMES THAT ARE NOT SUPPORTED BY ASPHALT OR CONCRETE SHALL BE ATTACHED TO THE PRE-CAST STRUCTURE WITH A MINIMUM OF TWO 3/4" 316 STAINLESS STEEL BOLTS, NUTS AND WASHERS. FRAMES SHALL BE SEALED WITH A MINIMUM OF TWO 1/2" BEADS OF RAM-NEK CAULKING.
8. TRENCHES SHALL BE DE-WATERED TO ENABLE PIPE AND APPURTENANCES TO BE INSTALLED FREE OF WATER ON UNDISTURBED SOIL. IF UNSUITABLE SUBSURFACE MATERIAL IS ENCOUNTERED, EXCAVATE EXTRA 6" AND BACK FILL WITH 3/4" GRAVEL.
9. P.V.C. PIPES SHALL BE LAID IN STRICT CONFORMANCE TO THE MANUFACTURER'S SPECIFICATIONS BACKFILLING OF UTILITY TRENCHES WILL NOT BE ALLOWED UNTIL INSPECTED BY THE OWNING UTILITY AND ENGINEER.
10. BACK FILL MATERIAL FOR SEWER MAIN AND LINES SHALL BE NON-COHESIVE, NON-PLASTIC MATERIAL FREE OF ALL DEBRIS, LUMPS AND ORGANIC MATTER. BACK FILL MATERIAL PLACED WITHIN 1' OF PIPING AND APPURTENANCES SHALL NOT CONTAIN ANY SOLID MATERIAL LARGER THAN 2" IN DIAMETER (1" FOR P.V.C. PIPE), AND NO SOLID MATERIAL LARGER 6" IN DIAMETER WILL BE PERMITTED IN ANY BACK FILL MATERIAL.
11. ALL EXCAVATION IN EXISTING RIGHT OF WAY SHALL BE BACK FILLED AND STABILIZED AT THE END OF EACH DAY TO PERMIT PEDESTRIAN AND VEHICULAR TRAFFIC PRIOR TO THE CONTRACTOR LEAVING THE CONSTRUCTION SITE.
12. IN ANY INSTANCE WHERE SEWER LINES ARE NOT INSTALLED WITHIN PUBLIC RIGHTS-OF-WAY, ALL LINES SHALL BE LOCATED IN A PUBLIC UTILITY EASEMENT, AND OWNING UTILITY MAINTENANCE RESPONSIBILITY IS MANHOLE TO MANHOLE ONLY.
13. UPON COMPLETION OF THE WORK AND PRIOR TO PLACEMENT OF ASPHALT A VISUAL INSPECTION AND REQUIRED TESTING SHALL BE MADE OF THE COMPLETED SYSTEM. THE OWNING UTILITY SHALL APPROVE THE SYSTEM PRIOR TO IT BEING PLACED IN SERVICE, AND BEING ACCEPTED FOR MAINTENANCE.
14. COMPLETE "AS-BUILT" INFORMATION RELATIVE TO MANHOLES, VALVES, SERVICES, FITTINGS, PIPE LENGTHS, INVERTS AND SLOPES SHALL BE ACCURATELY RECORDED AND TEN (10) COPIES MUST BE SUBMITTED TO THE ENGINEER. ALL COPIES MUST BE SIGNED AND SEALED BY A STATE OF FLORIDA REGISTERED ENGINEER OR LAND SURVEYOR.
15. AT THE END OF THE WARRANTY PERIOD THE OWNING UTILITY WILL T.V. INSPECT, AND CHECK MANHOLE JOINTS AND CONNECTIONS TO DETERMINE IF REPAIRS ARE NECESSARY BEFORE THE WARRANTY BOND IS RELEASED.
16. ONLY EIGHT(8") INCH MAINS (PRIVATE), WILL BE VISUALLY INSPECTED AND VIDEO RECORDED. EIGHT(8") INCH PIPE LESS THAN SIXTY(60') FEET LONG WILL BE EXEMPT. COPIES OF ALL VIDEO TAPES WILL BE PROVIDED TO THE CERTIFYING ENGINEER.

TRAFFIC CONTROL/MOT NOTES

1. THE CONTRACTOR IS REQUIRED TO PREPARE AND SUBMIT A TRAFFIC CONTROL PLAN TO LOCAL GOVERNMENT AGENCY FOR REVIEW AND APPROVAL.
2. THE CONTRACTOR SHALL INSTALL ALL APPROVED TRAFFIC CONTROL DEVICES PRIOR TO COMMENCING CONSTRUCTION.
3. THE CONTRACTOR IS RESPONSIBLE FOR THE LOCATION, INSTALLATION, AND COORDINATION OF ALL TRAFFIC SIGNS AND BARRICADES WITH LOCAL GOVERNMENT AGENCY .
4. THE CONTRACTOR SHALL NOTIFY THE LOCAL GOVERNMENT AGENCY PUBLIC WORKS OFFICE, RIGHT-OF-WAY, THE FIRE DEPARTMENT, THE POLICE DEPARTMENT, ALL GOVERNMENTAL TRAFFIC DEPARTMENTS, AND ANY ADJACENT BUSINESSES PRIOR TO ANY STREET BEING CLOSED OR MADE IMPASSABLE.
5. THE CONTRACTOR SHALL PROVIDE TEMPORARY GRADE TRANSITIONS DURING CONSTRUCTION TO ALLOW VEHICULAR ACCESS TO ADJACENT RESIDENTS, AS NECESSARY TO PROVIDE ACCESS.
6. SIGNS & BARRICADES SHALL BE IN ACCORDANCE WITH THE U.S. DEPARTMENT OF TRANSPORTATION'S "MANUAL OF UNIFORM TRAFFIC CONTROL DEVICES" AND THE FDOT "ROADWAY AND TRAFFIC DESIGN STANDARDS" INDEXES 600 THRU 670 (LATEST EDITION)
7. MAINTENANCE OF TRAFFIC FOR THE WORK TO BE PERFORMED WITHIN THE RIGHT-OF-WAY SHALL BE IN ACCORDANCE WITH FDOT STANDARD INDEX NUMBERS 600, 622, 623, AND 660. NO LANE CLOSURES ARE PERMITTED WITHOUT PRIOR APPROVAL HAVING BEEN OBTAINED FROM LOCAL GOVERNMENT AGENCY INSPECTOR.
8. CONTRACTOR TO REFER TO FDOT INDEX NO. 660 FOR ALL MAINTENANCE OF PEDESTRIAN TRAFFIC AND CONTROL FOR SIDEWALK CLOSURES.
9. THE CONTRACTOR SHALL PROVIDE AND MAINTAIN A SAFE AND EASILY ACCESSIBLE PAVED OR UNPAVED PATHWAY FOR PEDESTRIAN TRAFFIC THROUGH THE WORK ZONE FOR THE DURATION OF THE PROJECT. IF THE PATHWAY LIES ALONG A DESIGNATED SCHOOL ROUTE, THEN THE CONTRACTOR MUST PROVIDE ADEQUATE SUPERVISION AND/OR GUIDANCE TO THE SCHOOL AGED STUDENTS AS THEY TRAVERSE THRU THE WORK ZONE.
10. THE CONTRACTOR SHALL BE REQUIRED TO NOTIFY ALL APPROPRIATE AGENCIES (PARTIAL LIST BELOW) PRIOR TO ANY LANE CLOSURES ON AN ARTERIAL OR COLLECTOR ROADWAY THAT WOULD EXCEED ONE HOUR IN LENGTH.
    A) PUBLIC WORKS
    B) SHERIFF'S OFFICE
    C) TRANSIT AUTHORITY
    D) SCHOOL TRANSPORTATION
    E) EMS & FIRE ADMINISTRATION

WATER SYSTEM NOTES

1. ALL CONSTRUCTION SHALL CONFORM TO THE APPLICABLE OWNING UTILITY STANDARDS, SPECIFICATIONS, ORDINANCES AND REGULATIONS. POTABLE AND GRAY WATER CONNECTIONS FROM THE DOWNSTREAM SIDE OF BACKFLOW PREVENTORS TO BUILDING MUST COMPLY WITH LATEST FBC PLUMBING VOLUME.
2. WATER MAIN SHALL BE LAID 3 FEET OR MORE BELOW PROPOSED GRADE (UNLESS OTHERWISE NOTED ON PLANS OR CONTRACT DOCUMENTS AND SPECIFICATIONS).
3. CONFLICTS BETWEEN WATER AND STORM, SANITARY SEWER AND UNDERDRAIN SYSTEMS ARE TO BE RESOLVED BY ADJUSTING WATER LINES AS NECESSARY UPON APPROVAL BY OWNER AND OWNER'S ENGINEER. BUILDING CONNECTIONS OF WATER AND SEWER SHALL COMPLY WITH FBC PLUMBING SECTION.
4. FIRE HYDRANTS SHALL BE INSTALLED WITH HOSE NOZZLE FACING STREETS OR AS DIRECTED BY THE OWNING UTILITY. ALL FIRE HYDRANTS SHALL BE CONSTRUCTED IN A MANNER THAT MAINTAINS AT LEAST SIX (6) FEET OF CLEARANCE BETWEEN BACK OF CURB AND THE HYDRANT.
5. THE CONTRACTOR SHALL NOTIFY THE APPROPRIATE PUBLIC AGENCY(IES) PRIOR TO COMMENCING WORK WITHIN THEIR JURISDICTION(S).
6. THE CONTRACTOR SHALL MAINTAIN COPIES OF ALL APPLICABLE PERMITS ON-SITE AND SHALL BE RESPONSIBLE TO ADHERE TO ALL PERMIT CONDITIONS DURING CONSTRUCTION.
7. ALL WORK WITHIN RIGHTS-OF-WAY AND EASEMENTS WILL REQUIRE A SEPARATE PERMIT AND MAY REQUIRE AN ALTERATION TO CONSTRUCTION MATERIALS SHOWN ON THESE PLANS. RIGHT-OF-WAY PERMIT APPLICATIONS SHOULD BE SUBMITTED NO LATER THAN THIRTY (30) DAYS BEFORE THAT RIGHT-OF-WAY OR EASEMENT WORK IS TO COMMENCE.
8. THE CONTRACTOR IS RESPONSIBLE FOR ADJUSTMENTS OF VALVE BOX COVERS, MANHOLE RIMS AND COVER, GRATES, ETC., NECESSARY TO MATCH FINAL GRADES.
9. ALL PIPE LENGTHS ARE APPROXIMATE AND ARE TYPICALLY MEASURED FROM CENTER OF FITTINGS AND STRUCTURES.
10. ALL UNDERGROUND UTILITIES WITHIN PAVEMENT MUST BE INSTALLED BEFORE ROADWAY BASE AND SUBSURFACE COURSES ARE CONSTRUCTED.
11. COMPACTION FOR PIPE BACKFILL SHALL COMPLY WITH AASHTO T-99 (100%) (UNLESS OTHERWISE NOTED IN CONTRACT DOCUMENTS AND SPECIFICATIONS).
12. ALL WATER MAINS SHALL BE DUCTILE IRON UNLESS OTHERWISE SPECIFIED. WATER MAINS SHALL CONFORM TO AWWA C 151/A21.51MINIMUM CLASS 50. PIPE SHALL BE FURNISHED IN 18 OR 20- FOOT LAYING LENGTHS. PIPE SHALL BE LINED WITH A STANDARD THICKNESS CEMENT MORTAR LINING AND SEAL COATED IN ACCORDANCE WITH THE LATEST EDITION OF AWWA C 104/A21.4. PIPE THICKNESS CLASS SHALL BE CLASS 50 UNLESS OTHERWISE SPECIFIED. ALL JOINTS SHALL BE IN ACCORDANCE WITH THE LATEST EDITION OF ANSI/AWWA C 111/A21.11. IN AREAS WHERE THE SOIL IS DETERMINED TO BE CORROSIVE OR HIGH GROUND WATER IS EXPECTED, THE PIPE SHALL BE INSTALLED IN LOOSE POLYETHYLENE ENCASEMENT NOT LESS THAN 8 MILS THICK AND INSTALLED IN ACCORDANCE WITH ANSI SPECIFICATION A21.51.
13. A MINIMUM 6-FOOT HORIZONTAL SEPARATION SHALL BE MAINTAINED BETWEEN ANY TYPE OF SEWER AND WATER MAIN IN PARALLEL INSTALLATIONS WHENEVER POSSIBLE. IN CASES WHERE IT IS NOT POSSIBLE TO MAINTAIN A 6-FOOT HORIZONTAL SEPARATION, THE WATER MAIN MUST BE LAID IN A SEPARATE TRENCH OR ON AN UNDISTURBED EARTH SHELF LOCATED ON ONE SIDE OF THE SEWER OR FORCE MAIN AT SUCH AN ELEVATION THAT THE BOTTOM OF THE WATER MAIN IS AT LEAST 6 INCHES ABOVE THE TOP OF THE SEWER. WHERE IT IS NOT POSSIBLE TO MAINTAIN A VERTICAL DISTANCE OF 18 INCHES IN PARALLEL INSTALLATIONS, THE WATER MAIN SHALL BE CONSTRUCTED OF DIP AND THE SEWER OR THE FORCE MAIN SHALL BE CONSTRUCTED OF DIP (IF AVAILABLE IN THE SIZE PROPOSED) WITH A MINIMUM VERTICAL DISTANCE OF 12 INCHES. THE WATER MAIN SHOULD ALWAYS BE ABOVE THE SEWER. JOINTS ON THE WATER MAIN SHALL BE LOCATED AS FAR APART AS POSSIBLE FROM JOINTS ON THE SEWER OR FORCE MAIN (STAGGERED JOINTS).
14. SANITARY SEWERS, FORCE MAINS AND STORM SEWERS CROSSING WATER MAIN SHALL BE LAID TO PROVIDE A MINIMUM VERTICAL DISTANCE OF 18 INCHES BETWEEN THE INVERT OF THE UPPER PIPE AND THE CROWN OF THE LOWER PIPE WHENEVER POSSIBLE. WHERE THE SANITARY SEWERS, FORCE MAINS, RECLAIMED WATER MAINS AND STORM SEWERS MUST CROSS A POTABLE WATER MAIN WITH LESS THAN 12 INCHES VERTICAL DISTANCE: (1) BOTH THE SEWER AND WATER MAIN SHALL BE CONSTRUCTED OF DUCTILE IRON PIPE (DIP) AT CROSSING. (DIP IS NOT REQUIRED FOR STORM SEWERS IF IT IS NOT AVAILABLE IN THE SIZE PROPOSED / ALSO, A SANITARY SEWER OR FORCE MAIN MAY BE C900 PVC AT THE CROSSING). SUFFICIENT LENGTHS OF DIP MUST BE USED TO PROVIDE A MINIMUM SEPARATION OF 10 FEET BETWEEN ANY TWO JOINTS. (2) ALTERNATIVELY, ONE OF THE CROSSING MAINS SHALL BE ENCLOSED WITHIN A 20 FOOT LONG STEEL OR PVC CASING CENTERED ON THE CROSSING. WHERE WATER MAINS CROSSES BELOW SEWER MAIN, ENCASEMENT OF BOTH MAINS IS MANDATORY. ALL JOINTS ON THE WATER MAIN WITHIN 20 FEET OF THE CROSSING MUST BE LEAK FREE AND MECHANICALLY RESTRAINED. A MINIMUM VERTICAL CLEARANCE OF 6 INCHES MUST BE MAINTAINED AT THE CROSSING. ALL CROSSINGS SHALL BE ARRANGED SO THAT THE SEWER PIPE JOINTS AND THE WATER MAIN JOINTS ARE EQUIDISTANT FROM THE POINT OF CROSSING (PIPES CENTERED ON THE CROSSING). WHERE A NEW PIPE CONFLICTS WITH AN EXISTING PIPE, THE NEW PIPE SHALL BE CONSTRUCTED OF DIP AND THE CROSSING SHALL BE ARRANGED TO MEET THE REQUIREMENTS ABOVE.
15. ALL ON-SITE PVC WATER MAINS 4-12 INCHES SHALL BE IN ACCORDANCE WITH AWWA C-900 STANDARDS. ALL ON-SITE PVC WATER MAINS 2-3 INCHES SHALL BE CLASS 1120 OR 1220 (SDR 21) AND MEET REQUIREMENTS OF ASTM D-2241. WATER MAINS SMALLER THAN 2 INCHES SHALL BE CLASS 1120 OR 1220 SCHEDULE 80 AND MEET REQUIREMENTS OF ASTM D-1785. (REFER TO CONTRACT DOCUMENTS AND SPECIFICATIONS FOR ADDITIONAL REQUIREMENTS).
16. PE PIPE 2" OR SMALLER SHALL MEET REQUIREMENTS OF ASTM D-1248.
17. ALL WATER MAIN JOINTS SHALL BE RESTRAINED JOINTS WHERE APPLICABLE AND SHALL CONFORM TO THE OWNING UTILITY SPECIFICATIONS AND DETAILS.
18. COMPLETE "AS-BUILT" INFORMATION RELATIVE TO VALVES, SERVICES, FIRE HYDRANTS, FITTINGS, PIPE LENGTHS, INVERTS AND SLOPES SHALL BE ACCURATELY RECORDED AND TEN (10) COPIES MUST BE SUBMITTED TO THE ENGINEER. ALL COPIES MUST BE SIGNED AND SEALED BY A REGISTERED ENGINEER OR LAND SURVEYOR.

GENERAL NOTES 1

THOMAS M. ROSE, PE
FL LICENSE NO. 62860

Cardno TBE
380 Park Place Blvd., Suite 300, Clearwater, Florida, 33759
www.cardnotbe.com - 727.531.3505
Certificate of Authorization No. 3843

CRAIG A. SCHNEIDER, AIA
ARCHITECT
1736 East Sunshine, Suite 417
Springfield, Missouri 65804
417.862.0558
Fax: 417.862.3265
e-mail: architect@esterlyschneider.com

New O'Reilly Auto Parts Store:
S.R. 52
HUDSON, FL
(HUDSON #2)

O'Reilly AUTO PARTS
233 SOUTH PATTERSON
SPRINGFIELD, MISSOURI 65802
417-862-2674 PHONE

COMM # 3539

DATE: 03-21-14

REVISION DATE: 05-06-14

GENERAL DUST CONTROL NOTES

1. CONTRACTOR TO USE BEST MANAGEMENT PRACTICES (BMPs) TO REDUCE SURFACE AND AIR MOVEMENT OF DUST DURING LAND DISTURBING, DEMOLITION AND CONSTRUCTION ACTIVITIES. CONTRACTOR TO BECOME FAMILIAR WITH THE CONTENTS OF THE STORMWATER POLLUTION PREVENTION PLAN AND KEEP A COPY ON SITE AT ALL TIMES DURING CONSTRUCTION.

2. CONTRACTOR TO PREVENT SURFACE AND AIR MOVEMENT OF DUST FROM EXPOSED SOIL SURFACES AND REDUCE THE PRESENCE OF AIRBORNE SUBSTANCES WHICH MAY BE HARMFUL OR INJURIOUS TO HUMAN HEALTH, WELFARE, OR SAFETY, OR TO ANIMAL OR PLANT LIFE, AND IN AREAS SUBJECT TO SURFACE AND AIR MOVEMENT OF DUST WHERE ON-SITE AND OFF-SITE DAMAGE IS LIKELY TO OCCUR IF PREVENTIVE MEASURES ARE NOT TAKEN.

3. CONSTRUCTION ACTIVITIES INEVITABLY RESULT IN THE EXPOSURE AND DISTURBANCE OF SOIL. FUGITIVE DUST IS EMITTED BOTH DURING THE ACTIVITIES (I.E., EXCAVATION, DEMOLITION, VEHICLE TRAFFIC, HUMAN ACTIVITY) AND AS A RESULT OF WIND EROSION OVER THE EXPOSED EARTH SURFACES. LARGE QUANTITIES OF DUST ARE TYPICALLY GENERATED IN "HEAVY" CONSTRUCTION ACTIVITIES, SUCH AS ROAD AND STREET CONSTRUCTION AND SUBDIVISION, COMMERCIAL AND INDUSTRIAL DEVELOPMENT, WHICH INVOLVE DISTURBANCE OF SIGNIFICANT AREAS OF SOIL SURFACE. RESEARCH AT CONSTRUCTION SITES HAS ESTABLISHED AN AVERAGE DUST EMISSION RATE OF 1.2 TONS/ACRE/MONTH FOR ACTIVE CONSTRUCTION. EARTH- MOVING ACTIVITIES COMPRISE THE MAJOR SORES OF CONSTRUCTION DUST EMISSIONS, BUT TRAFFIC AND GENERAL DISTURBANCE OF THE SOIL ALSO GENERATE SIGNIFICANT DUST EMISSION. IN PLANNING FOR DUST CONTROL, IT SHOULD BE OBVIOUS THAT THE LESS SOIL IS EXPOSED AT ANY ONE TIME, THE LESS POTENTIAL THERE WILL BE FOR DUST GENERATION. PHASING A PROJECT AND UTILIZING TEMPORARY STABILIZATION PRACTICES UPON THE COMPLETION OF GRADING CAN SIGNIFICANTLY REDUCE DUST EMISSION.

TEMPORARY MEASURES :

1. MULCHES- A NATURAL OR ARTIFICIAL LAYER OF PLANT MATERIALS OR OTHER MATERIALS THAT WILL NOT FLOAT OR WASH AWAY.

2. VEGETATIVE- TEMPORARY SEEDING OR GROUND COVERS.

3. TILLAGE- THIS PRACTICE IS DESIGNED TO ROUGHEN AND BRING CLODS TO THE SURFACE. IT IS AN EMERGENCY MEASURE WHICH SHOULD BE USED BEFORE WIND EROSION STARTS. BEGIN PLOWING ON WINDWARD SIDE OF SITE. CHISEL -TYPE PLOWS (WITH 12-INCH SPACING), SPRING -TOOTHED HARROWS, AND SIMILAR PLOWS ARE EXAMPLES OF EQUIPMENT WHICH MAY PRODUCE THE DESIRED EFFECT.

4. IRRIGATION- THIS IS GENERALLY DONE AS AN EMERGENCY TREATMENT. SITE IS SPRINKLED WITH WATER UNTIL THE SURFACE IS WET. REPEAT AS NEEDED. TO PREVENT CARRYOUT OF MUD ONTO STREETS, REFER TO TEMPORARY GRAVEL CONSTRUCTION ENTRANCE.

5. BARRIERS- SOLID BOARD FENCE, BUR LAY FENCE, CREATE WALLS, BALES OF HAY AND SIMILAR MATERIAL CAN BE USED TO CONTROL AIR CURRENTS AND AT INTERVALS OF ABOUT 15 TIMES THE BARRIER HEIGHT ARE EFFECTIVE IN CONTROLLING WIND EROSION.

6. PERMANENT VEGETATION- PERMANENT SEEDING AND PERMANENT STABILIZATION WITH SOD.

7. TOP SOILING- THIS ENTAILS COVERING THE SURFACE WITH LESS EROSIVE SOIL MATERIAL.

8. STONE- COVER SURFACE WITH CRUSHED STONE OR COARSE GRAVEL.

EROSION CONTROL MEASURES NOTE:

REQUIRED EROSION CONTROL MEASURES MUST REMAIN INTACT THROUGHOUT CONSTRUCTION. FAILURE TO INSTALL OR PROPERLY MAINTAIN THESE BARRICADES WILL RESULT IN ENFORCEMENT ACTION WHICH MAY INCLUDE CITATIONS, AS PROVIDED BY CHAPTERS 40D-4 AND 40D-40, F.A.C. INITIATION OF CIVIL PENALTY PROCEDURES PURSUANT TO SECTION 373.129, F.A.C., CAN RESULT IN A PENALTY NOT TO EXCEED $10,000 PER OFFENSE WITH EACH DATE DURING WHICH SUCH VIOLATION OCCURS CONSTITUTING A SEPARATE OFFENSE. CONTRACTOR TO ADHERE TO GENERAL DUST CONTROL NOTES, EROSION, SILTATION, AND SEDIMENT CONTROL NOTES, AND SILT FENCE, TURBIDITY BARRIER, AND TREE BARRICADE DETAILS INCLUDED IN THESE DOCUMENTS.

FUGITIVE DUST CONTROL NOTE

THE CONTRACTOR SHALL TAKE ALL REASONABLE MEANS TO ELIMINATE THE TRANSPORT OF DUST FROM THE PROJECT SITE. SPECIAL MEASURES, SUCH AS PERIODICALLY APPLYING WATER TO THE WORK SITE TO PREVENT DUST SHALL BE INCORPORATED INTO THE CONTRACTORS WORK PLAN. CONTRACTOR TO ADHERE TO DUST CONTROL NOTES INCLUDED IN THESE DOCUMENTS.

TEMPORARY GRAVEL CONSTRUCTION ENTRANCE AND EXIT NOTES

DEFINITION:
A STONE STABILIZER PAD LOCATED AT POINTS OF VEHICULAR INGRESS AND EGRESS ON A CONSTRUCTION SITE.

PURPOSE:
TO STABILIZE ENTRANCES TO THE CONSTRUCTION SITE AND REDUCE THE AMOUNT OF SEDIMENT TRANSPORTED ONTO PUBLIC ROADS AND STORM WATER SYSTEMS BY MOTOR VEHICLES OR RUNOFF.

CONDITIONS WHERE PRACTICE APPLIES:
WHEREVER TRAFFIC WILL BE LEAVING A CONSTRUCTION SITE AND MOVING DIRECTLY INTO A PUBLIC ROAD OR OTHER PAVED AREA.

PLANNING CONSIDERATIONS:
CONSTRUCTION ENTRANCES PROVIDE AN AREA WHERE MUD CAN BE REMOVED FROM CONSTRUCTION VEHICLE TIRES BEFORE THEY ENTER A PUBLIC ROAD. IF THE ACTION OF THE VEHICLE TRAVELING OVER THE GRAVEL PAD IS NOT SUFFICIENT TO REMOVE MOST OF THE MUD, THEN THE TIRES MUST BE WASHED BEFORE THE VEHICLE ENTERS A PUBLIC ROAD. IF WASHING IS USED, PROVISIONS MUST BE MADE TO INTERCEPT THE WASH WATER AND TRAP THE SEDIMENT BEFORE IT IS CARRIED OFF- SITE. CONSTRUCTION ENTRANCE SHOULD BE USED IN CONJUNCTION WITH THE STABILIZATION OF CONSTRUCTION ROADS TO REDUCE THE AMOUNT OF MUD PICKED UP BY CONSTRUCTION VEHICLES.

CONSTRUCTION ENTRANCES PROVIDE AN AREA WHERE MUD CAN BE REMOVED FROM CONSTRUCTION VEHICLE TIRES BEFORE THEY ENTER A PUBLIC ROAD. IF THE ACTION OF THE VEHICLE TRAVELING OVER THE GRAVEL PAD IS NOT SUFFICIENT TO REMOVE MOST OF THE MUD, THEN THE TIRES MUST BE WASHED BEFORE THE VEHICLE ENTERS A PUBLIC ROAD. IF WASHING IS USED, PROVISIONS MUST BE MADE TO INTERCEPT THE WASH WATER AND TRAP THE SEDIMENT BEFORE IT IS CARRIED OFF- SITE. CONSTRUCTION ENTRANCE SHOULD BE USED IN CONJUNCTION WITH THE STABILIZATION OF CONSTRUCTION ROADS TO REDUCE THE AMOUNT OF MUD PICKED UP BY CONSTRUCTION VEHICLES.

DESIGN CRITERIA
AGGREGATE SIZE:
FDOT NO. 1 COARSE AGGREGATE (1.5-3.5 INCH STONE) (4-9 CM) SHOULD BE USED.

ENTRANCE DIMENSIONS:
THE AGGREGATE MUST BE AT LEAST 6 INCHES (15 CM) THICK. IT MUST EXTEND THE FULL WIDTH OF THE VEHICULAR INGRESS AND EGRESS AREA, OR A MINIMUM OF 20'. THE LENGTH OF THE ENTRANCE MUST BE AT LEAST 50 FEET (20 M). IF POSSIBLE OR AS DIRECTED BY THE CITY ENGINEER THE ENTRANCE MUST WIDEN AT ITS CONNECTION TO THE ROADWAY IN ORDER TO ACCOMMODATE THE TURNING RADIUS OF LARGE TRUCKS.

WASHING:
IF CONDITIONS ON THE SITE AREA IS SUCH THAT MOST OF THE MUD IS NOT REMOVED BY THE VEHICLES TRAVELING OVER THE GRAVEL, THEN THE TIRES OF THE VEHICLES MUST BE WASHED BEFORE ENTERING A PUBLIC ROAD. WASH WATER MUST BE CARRIED AWAY FROM THE ENTRANCE TO THE SETTING AREA TO REMOVE SEDIMENT. A WASH RACK MAY ALSO BE USED TO MAKE WASHING MORE CONVENIENT AND EFFECTIVE.

LOCATION:
THE ENTRANCE SHOULD BE LOCATED FOR MAXIMUM UTILITY BY ALL CONSTRUCTION VEHICLES.

CONSTRUCTION SPECIFICATIONS:
THE AREA OF THE ENTRANCE SHOULD BE CLEARED OF ALL VEGETATION, ROOTS, AND OTHER OBJECTIONABLE MATERIAL. A GEOTEXTILE SHOULD BE LAID DOWN TO IMPROVE STABILITY AND SIMPLIFY MAINTENANCE. THE GRAVEL SHALL THEN BE LACED OVER THE GEOTEXTILE TO THE SPECIFIED DIMENSIONS.

MAINTENANECE:
THE ENTRANCE SHALL BE MAINTAINED IN A CONDITION WHICH WILL PREVENT TRACKING OR FLOW OF MUD ONTO PUBLIC RIGHT-OF-WAY. THIS MAY REQUIRE PERIODIC TOP DRESSING WITH 2 -INCH (5 CM) STONE, AS CONDITIONS DEMAND, AND REPAIR AND/OR CLEAN OUT OF ANY STRUCTURES USED TO TRAP SEDIMENTS. ALL MATERIALS SPILLED, DROPPED, WASHED, OR TRACKED FROM VEHICLES ONTO ROADWAYS OR INTO STORM DRAINS MUST BE REMOVED IMMEDIATELY. LOOK FOR SIGNS OF TRUCKS AND TRAILERED EQUIPMENT "CUTTING CORNERS" WHERE GRAVEL MEETS THE ROADWAY. SWEEP THE PAVED ROAD DAILY FOR SEDIMENTS AND STONES.

CLEARING AND GRUBBING

THE CONTRACTOR SHALL ONLY REMOVE TREES DESIGNATED FOR REMOVAL IN THE PLAN, OR AS DIRECTED BY THE OWNER, ARCHITECT, AND ENGINEER. CONTRACTOR IS TO OBTAIN THE TREE REMOVAL PERMIT FROM LOCAL GOVERNMENT AGENCY .

1. WHERE EXCAVATION IS REQUIRED FOR CONSTRUCTION OF SIDEWALK, STORMWATER STRUCTURES, AND PIPES, ALL STUMPS, AND ROOTS, ETC., SHALL BE REMOVED COMPLETELY FROM THE AREA. ALL STUMPS WITHIN THE PROJECT LIMITS SHALL BE REMOVED COMPLETELY AND REPLACED WITH COMPACTED BACKFILL BEFORE THE AREA IS FILLED. TREE ROOTS IN AREA OF PROPOSED SIDEWALK, RAMP, OR DRIVEWAY REPLACEMENT SHALL BE GROUND OUT TO A DEPTH OF 6" BELOW BOTTOM OF NEW SIDEWALK OR DRIVEWAY. ALL PRUNED ROOT DEBRIS SHALL BE REMOVED FROM THE SUB-BASE MATERIAL PRIOR TO POURING CONCRETE, ASPHALT, OR APPLICATION OF OTHER SPECIFIED MATERIALS.

2. ALL STUMPS, ROOTS, AND OTHER DEBRIS PROJECTING THROUGH OR APPEARING ON THE SURFACE OF THE GROUND SHALL BE REMOVED TO A DEPTH OF 1-FOOT BELOW THE COMPLETED SURFACE.

3. IF APPLICABLE, THE CONTRACTOR SHALL REMOVE ALL DRIVEWAYS, SIDEWALKS, CURBS, AND ALL ABANDONED UTILITY LINES, PIPES, STRUCTURES, AND OTHER SUBTERRANEAN OBJECTS WITHIN PROJECT AREA TO A MINIMUM DEPTH OF FOUR (4) FEET BELOW GRADE, OR AS OTHERWISE DIRECTED BY THE ENGINEER.

STATE OF FLORIDA EROSION & SEDIMENT CONTROL - DESIGNER & REVIEWER MANUAL

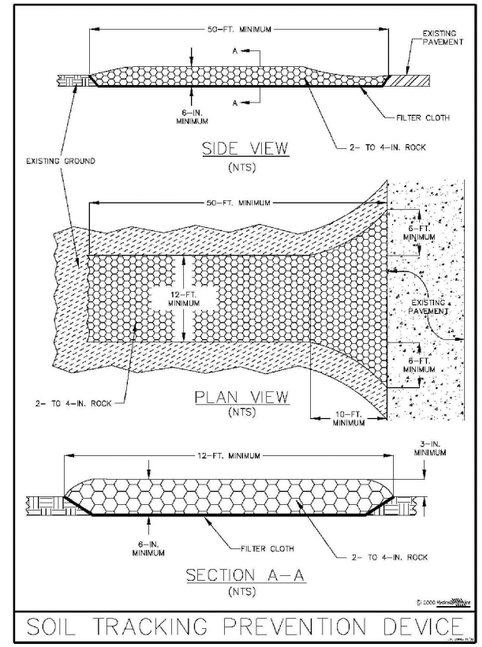

Figure V-52: Illustration of a Soil Tracking Prevention Device

Permission is given by HydroDynamics Incorporated to copy and reproduce this detail

1 C2 SOIL TRACKING PREVENTION DEVICE
SCALE: N.T.S.

GENERAL NOTES 2

THOMAS M. ROSE, PE
FL LICENSE NO. 62860

Cardno TBE
380 Park Place Blvd., Suite 300, Clearwater, Florida, 33759
www.cardnotbe.com - 727.531.3505
Certificate of Authorization No. 3843

CRAIG A. SCHNEIDER, AIA
ARCHITECT
1736 East Sunshine, Suite 417
Springfield, Missouri 65804
417.862.0558
Fax: 417.862.3265
e-mail: architect@estierlyschneider.com

New O'Reilly Auto Parts Store:
S.R. 52
HUDSON, FL
(HUDSON #2)

O'Reilly AUTO PARTS
233 SOUTH PATTERSON
SPRINGFIELD, MISSOURI 65802
417-862-2674 PHONE

COMM #	3530
DATE:	03-21-14
REVISION DATE:	05-06-14

STORMWATER POLLUTION PREVENTION PLAN

PROJECT NAME: O'REILLY AUTO PARTS (HUDSON #2)

PROJECT ADDRESS:
9232 STATE ROAD 52
HUDSON, FLORIDA
PASCO COUNTY

OWNER'S ADDRESS:
233 SOUTH PATTERSON
SPRINGFIELD, MISSOURI 65802
417-862-2674 PHONE

DESCRIPTION OF PURPOSE AND TYPES OF SOIL DISTURBING ACTIVITIES:

PROPERTY AREA APPROXIMATELY = 0.97 ACRES

PROJECT AREA APPROXIMATELY = 0.97 ACRES

CONSTRUCTION PROPOSED: GENERAL COMMERCIAL FACILITY

SOIL DISTURBING ACTIVITIES WILL INCLUDE:
CLEARING EXISTING PAVEMENT / BROKEN ASPHALT

WETLAND ACTIVITIES INCLUDE:
NO WETLAND IMPACTS ARE PROPOSED FOR THE PROJECT

CONSTRUCTION REMOVAL ACTIVITIES WILL INCLUDE:
REMOVE EXISTING BUILDINGS ON-SITE

STORMWATER DRAINAGE AREA:
BASIN AREA: 0.82 ACRES
PRE-DEVELOPMENT CURVE NUMBER (CN): 43
POST DEVELOPMENT CURVE NUMBER (CN): 39 DCIA: 55%

WATER QUALITY: WATER QUALITY TREATMENT PROVIDED IN DRY RETENTION SYSTEM

WATER QUANTITY: WATER QUANTITY PROVIDED IN DRY RETENTION SYSTEM

SEQUENCE OF MAJOR ACTIVITIES

1. INSTALL STAKED SILT FENCE AND EROSION CONTROL AS SHOWN ON THE SITE DEMOLITION PLAN.

2. INSTALL STABILIZED CONSTRUCTION ENTRANCE (IF REQUIRED).

3. COMPLETE SITE PREPARATION PLAN, GRADING, DRAINAGE PLAN, AND UTILITY ONSITE/OFFSITE PLANS.

4. INSTALL NEW UTILITIES, STORM SYSTEMS, AND CONSTRUCT BUILDING AND PARKING.

5. FILL AND GRADE DISTURBED AREAS.

6. REPAIR ANY WASHED OUT AREAS, INSTALL PLANTING MATERIAL AS SHOWN ON LANDSCAPE PLAN. SOD, SEED, AND MULCH DISTURBED AREAS AS INDICATED ON PLANS.

7. WHEN CONSTRUCTION ACTIVITY IS COMPLETE AND THE SITE STABILIZED, REMOVE EROSION PROTECTION DEVICES AND CONSTRUCTION ENTRANCE AS REQUIRED.

NAME OF RECEIVING WATERS:
THE PROPOSED IMPROVEMENTS WILL DISCHARGE TO AN EXISTING FDOT STORM SYSTEM ON SR 52.

CONTROLS

EROSION AND SEDIMENT CONTROLS

CONTRACTOR TO USE BEST MANAGEMENT PRACTICES (BMPs) DURING AND AFTER CONTRUCTION TO MINIMIZE EROSION AND SEDIMENTATION AND TO PROPERLY MANAGE RUNOFF FOR BOTH STORMWATER QUANTITY AND QUALITY. CONTRACTOR TO ADHERE TO FLORIDA DEPARTMENT OF ENVIRONMENTAL PROTECTION EROSION AND SEDIMENTATION CONTROL MANUAL.

BEFORE SITE DISTURBANCE OCCURS, PERIMETER CONTROLS, SEDIMENT TRAPS, BASINS, AND DIVERSIONS MUST BE SET IN PLACE BY THE CONTRACTOR TO CONTROL RUNOFF AND CAPTURE SEDIMENTS. THE CONTRACTOR IS REQUIRED TO REVIEW THE SITE SPECIFIC EROSION CONTROL PLAN AS SHOWN ON THE CONTRUCTION DOCUMENTS.

THE CONTRACTOR MAY ALSO BE REQUIRED TO MODIFY THE PLAN OR MATERIALS TO ADAPT TO SEASONAL VARIATIONS OR SITE CONDITIONS. CONTRACTOR WILL COMPLY WITH EROSION CONTROL PLAN AND DETAILS. ANY MODIFICATIONS TO THIS PLAN MUST BE SIGNED BY A PROFESSIONAL ENGINEER REPRESENTING THE CONTRACTOR. CONTRACTOR SHALL REMOVE ALL SEDIMENT THAT HAS MIGRATED OFF-SITE. THE EROSION CONTROL DEVISES FOR THESE ACTIVITIES ARE SPECIFIED IN THE PLANS AND ACCORDING TO "DESIGN STANDARDS FOR DESIGN, CONSTRUCTION, MAINTENANCE AND UTILITY OPERATIONS ON THE STATE HIGHWAY SYSTEM (CURRENT EDITION), SECTION 104. THE CONTRACTOR IS RESPONSIBLE FOR DETERMINING IF ADDITIONAL CONTROLS ARE NEEDED AND DEPLOYMENT SCHEDULES FOR THE IMPLEMENTATION OF ALL EROSION CONTROL DEVICES.

STABILIZATION PRACTICES:

WIND EROSION STABILIZATION

-THE CONTRACTOR SHALL DENUDE ONLY AREAS WHERE IT IS EXPECTED TO BE GRADED OR ALTERED WITHIN A TWO (2) WEEK TIME- FRAME. FINAL GRADES SHALL BE PERFORMED AND TEMPORARY OR PERMANENT SOIL STABILIZATION SHALL BE APPLIED. AREAS WHERE CONSTRUCTION OPERATIONS WILL BE CONTINUOUS, FUGITIVE DUST SHALL BE MANAGED BY APPLYING A WATER SPRAY TO SATURATE THE SURFACE SOILS CONTINUOUSLY AND ADDITIONAL MEASURES MAY NEED TO BE TAKEN CONTROL OFF-SITE TRANSPORT OF UNACCEPTABLE LEVELS OF DUST.

TEMPORARY STABILIZATION

-TOP OF SOIL STOCK PILES AND DISTURBED PORTIONS OF THE SITE WHERE CONSTRUCTION ACTIVITY TEMPORARILY CEASES FOR AT LEAST 21 DAYS WILL BE STABILIZED WITH TEMPORARY GRASS AND MULCH NO LATER THAN 14 DAYS FROM THE LAST CONSTRUCTION ACTIVITY. GRASS SEED SHALL BE A MIXTURE OF 20 PARTS OF BERMUDA SEED AND 80 PARTS OF PENSACOLA BAHIA. THE SEPARATE TYPES OF SEED USED SHALL BE THOROUGHLY DRY MIXED IMMEDIATELY BEFORE SOWING. SEED WHICH HAS BECOME WET SHALL NOT BE USED. THE MULCH MATERIAL USED SHALL NORMALLY BE DRY MULCH. DRY MULCH SHALL BE STRAW OR HAY, CONSISTING OF OAT, RYE OR WHEAT STRAW, OR OF PANGOLA, PEANUT, COASTAL BERMUDA OR BAHIA GRASS HAY. ONLY UNDETERIORATED MULCH, WHICH CAN BE READILY CUT INTO THE SOIL, SHALL BE USED. AREAS OF THE SITE, WHICH ARE TO BE PAVED, WILL BE TEMPORARILY STABILIZED BY APPLYING STABILIZATION AND BASE. TREE BARRICADES WHERE REQUIRED.

PERMANENT STABILIZATION

-DISTURBED PORTIONS OF THE SITE WHERE CONSTRUCTION ACTIVITIES PERMANENTLY CEASES SHALL BE STABILIZED WITH SOD NO LATER THAN 14 DAYS AFTER THE LAST CONSTRUCTION ACTIVITY.

SEDIMENT BASINS

- IF APPLICABLE, SEDIMENT BASINS TO BE CONSTRUCTED BY THE CONTRACTOR TO DETAIN SEDIMENT-LADEN RUNOFF FROM DISTURBED AREAS LONG ENOUGH FOR MOST OF THE SEDIMENT TO SETTLE OUT. SEDIMENT BASINS SHOULD BE USED TOGETHER WITH EROSION CONTROL PRACTICES SUCH AS TEMPORARY SEEDING, MULCHING, DIVERSION BERMS, ETC., TO REDUCE THE AMOUNT SEDIMENT FLOWING INTO THE STORM SYSTEM.

DEWATERING

THE CONTRACTOR SHALL BE RESPONSIBLE FOR PROVIDING ALL MATERIALS, EQUIPMENT, LABOR, AND SERVICES NECESSARY FOR CARE OF WATER AND EROSION CONTROL. EXCAVATION WORK SHALL NOT BEGIN BEFORE THE EROSION AND SEDIMENTATION CONTROL PLAN IS IN PLACE. DEWATERING TO BE COMPLETED BY THE CONTRACTOR AND SHALL FOLLOW DEWATERING SPECIFICATION.

STRUCTURAL PRACTICES

STAKED SILT FENCES

- THE STAKED SILT FENCES WILL BE CONSTRUCTED ALONG THE CONSTRUCTION LIMITS OR AS DEPICTED ON THE EROSION CONTROL & DEMOLITION PLANS AND/OR ON OTHER CONSTRUCTION PLANS. THESE DEVICES WILL STOP AND DIVERT RUNOFF FROM THE SITE TO OTHER SURFACE WATERS.

OTHER CONTROLS / WASTE DISPOSAL

OFFSITE VEHICLE TRACKING

STABILIZED CONSTRUCTION ENTRANCES SHALL BE PROVIDED TO HELP REDUCE VEHICLE TRACKING OF SEDIMENTS. THE PAVED STREETS WILL BE CLEANED AS NEEDED TO REMOVE ANY EXCESS MUD, DIRT OR ROCK TRACKED FROM THE SITE. DUMP TRUCKS HAULING MATERIAL FROM OR TO THE SITE WILL BE COVERED WITH A TARPUALIN AT ALL TIMES.

WASTE MATERIALS

- ALL WASTE MATERIAL WILL BE COLLECTED AND STORED IN DUMPSTERS PER LOCAL SOLID WASTE REGULATIONS. ALL TRASH AND CONSTRUCTION DEBRIS FROM THE SITE WILL BE DEPOSITED IN THE DUMPSTER. THE DUMPSTER WILL BE DUMPED A MINIMUM OF TWICE A WEEK OR MORE OFTEN IF NECESSARY, AND THE TRASH WILL BE HAULED TO THE APPROPRIATE COUNTY LOCATION FOR DUMPING. NO CONSTRUCTION MATERIALS WILL BE BURIED ON-SITE. ALL PERSONNEL WILL BE INSTRUCTED REGARDING THE CORRECT PROCEDURE FOR WASTE DISPOSAL. NOTICES STATING THESE PRACTICES WILL BE POSTED IN THE ON- SITE OFFICE TRAILER AND THE CONSTRUCTION MANAGER RESPONSIBLE FOR THE DAY-TO-DAY SITE OPERATIONS, WILL BE RESPONSIBLE FOR SEEING THAT THESE PROCEDURES ARE FOLLOWED.

THE CONTRACTOR SHALL PROVIDE LITTER CONTROL AND COLLECTION WITHIN THE PROJECT BOUNDARIES DURING CONSTRUCTION ACTIVITIES. ANY CHEMICAL CONTAINERS SHALL BE DISPOSED OF BY THE CONTRACTOR ACCORDING TO EPA'S STANDARD PRACTICES AS DETAILED BY THE MANUFACTURER. NO SOLID MATERIALS INCLUDING BUILDING & CONSTRUCTION MATERIALS SHALL BE DISCHARGE TO ADJACENT WATERWAYS OR WETLANDS OR BURIED ON SITE.

HAZARDOUS WASTE

THE CONTRACTOR WILL IMMEDIATELY NOTIFY THE PERMITTING AGENCY IN WRITING IF ANY HAZARDOUS WASTE MATERIAL IS ENCOUNTERED DURING SITE INVESTIGATION AND CONSTRUCTION.

THE CONTRACTOR WILL ALSO BE RESPONSIBLE FOR NOTIFYING THE DEPARTMENT OF ENVIRONMENTAL PROTECTION (FDEP) WITHIN 24 HOURS OF DISCOVERY.

IF ENCOUNTERED, HAZARDOUS WASTE MATERIALS WILL BE DISPOSED OF IN THE MANNER SPECIFIED BY LOCAL, STATE AND FEDERAL REGULATIONS. THE CONTRACTOR WILL BE RESPONSIBLE FOR SEEING THAT THESE PRACTICES ARE FOLLOWED.

SANITARY WASTE

- ALL SANITARY WASTE WILL BE COLLECTED FROM PORTABLE UNITS A MINIMUM OF THREE TIMES PER WEEK BY A LICENSED SANITARY WASTE MANAGEMENT CONTRACTOR, IN ACCORDANCE WITH FDOT STANDARD SPEC. FOR ROAD AN BRIDGE CONSTRUCTION 2010 EDITION SECTION 7-6, AND AS REQUIRED BY LOCAL REGULATIONS.

TIMING OF CONTROL MEASURES

AS INDICATED IN THE SEQUENCE OF MAJOR ACTIVITIES, STAKED SILT BARRIERS, EROSION CONTROL, AND STABILIZED CONSTRUCTION ENTRANCES CONSTRUCTED PRIOR TO GRUBBING OR GRADING OF ANY OTHER PORTIONS OF THE SITE. AREAS WHERE CONSTRUCTION ACTIVITY TEMPORARILY CEASES FOR MORE THAN 21 DAYS WILL BE STABILIZED WITH A TEMPORARY GRASS AND MULCH WITHIN 14 DAYS OF THE LAST DISTURBANCE. ONCE CONSTRUCTED ACTIVITY CEASES PERMANENTLY IN THAT AREA, THAT AREA WILL BE STABILIZED WITH PERMANENT SOD. AFTER THE ENTIRE SITE IS STABILIZED, THE ACCUMULATED SEDIMENT WILL BE REMOVED FROM THE TRAPS AND THE STAKED SILT BARRIERS WILL BE REMOVED.

MAINTENANCE INSPECTION PROCEDURES

EROSION AND SEDIMENT CONTROL INSPECTION AND MAINTENANCE PRACTICES:

THESE ARE THE INSPECTION AND MAINTENANCE PRACTICES THAT SHALL BE USED TO MAINTAIN EROSION AND SEDIMENT CONTROL.

LESS THAN ONE HALF OF THE SITE WILL BE DENUDED AT ONE TIME PRIOR TO ESTABLISHING EROSION CONTROL MANAGEMENT ALL CONTROL MEASURES WILL BE INSPECTED ONCE PER DAY AND FOLLOWING ANY STORM EVENT OF 0.5 INCHES OR GREATER BY A CONTRACTOR'S REPRESENTATIVE.

ALL MEASURES WILL BE MAINTAINED IN GOOD WORKING ORDER; IF A REPAIR IS NECESSARY, IT WILL BE INITIATED WITHIN 24 HOURS OF REPORT.

BUILT UP SEDIMENT WILL BE REMOVED FROM SILT FENCE WHEN IT HAS REACHED ONE-THIRD THE HEIGHT OF THE FENCE. SILT FENCE WILL BE INSPECTED REGULARLY FOR DEPTH OF SEDIMENT, TEARS, TO SEE IF THE FABRIC IS SECURELY ATTACHED TO THE FENCE POSTS, AND TO SEE THAT THE FENCE POSTS ARE FIRMLY IN THE GROUND.

IF APPLICABLE, THE SEDIMENT BASINS WILL BE INSPECTED FOR DEPTH OF SEDIMENT, AND BUILT UP SEDIMENT WILL BE REMOVED WHEN IT REACHES 10 PERCENT OF THE DESIGN CAPACITY OR AT THE END OF THE JOB.

A MAINTENANCE INSPECTION REPORT SHALL BE MADE AFTER EACH INSPECTION BY THE CONTRACTOR AND SHALL BE KEPT IN AN ACTIVE LOG READILY AVAILABLE AT THE JOB SITE CONSTRUCTION TRAILER. THE SITE SUPERINTENDENT WILL SELECT INDIVIDUALS WHO WILL BE RESPONSIBLE FOR MAINTENANCE AND REPAIR ACTIVITIES. FILLING OUT THE INSPECTION AND MAINTENANCE REPORT WILL BE BY THE CONTRACTOR. PERSONNEL SELECTED FOR MAINTENANCE RESPONSIBILITIES WILL RECEIVE TRAINING FROM THE SITE SUPERINTENDENT. THEY WILL BE TRAINED IN ALL MAINTENANCE PRACTICES NECESSARY FOR KEEPING THE EROSION AND SEDIMENT CONTROLS USED ON-SITE IN GOOD WORKING ORDER.

STORM WATER MANAGEMENT

STORMWATER MANAGMENT WILL BE PROVIDED BY ONE (1) DRY RETENTION SYSTEM. PROPOSED ON-SITE STORMWATER INFRASTRUCTURE WILL INCLUDE STORM PIPES AND DITCH BOTTOM INLETS. CONTRACTOR TO INSTALL SILT FENCE AROUND PROJECT LIMITS.

WETLAND MITIGATION

WETLAND MITIGATION IS NOT APPLICABLE FOR THE PROPOSED PROJECT.

NON–STORM WATER DISCHARGES

IT IS EXPECTED THAT THE FOLLOWING NON-STORM WATER DISCHARGES WILL OCCUR FROM THE SITE DURING THE CONSTRUCTION PERIOD:

1. WATER FROM WATER LINE FLUSHING

2. PAVEMENT WASH WATERS (WHERE NO SPILL OR LEAKS OF TOXIC OR VEHICLE AND HAZARDOUS MATERIALS HAVE OCCURRED.

3. UNCONTAMINATED GROUNDWATER FROM DEWATERING ACTIVITIES

ALL NON-STORM WATER DISCHARGES WILL BE DIRECTED TO THE SEDIMENT BASIN PRIOR TO DISCHARGE OR AS DIRECTED BY THE ENGINEER. IF CONTAMINATED SOIL OR GROUNDWATER IS ENCOUNTERED, THE CONTRACTOR MUST NOTIFY THE OWNER AND ENGINEER.

MAINTENANCE AND INSPECTION

ALL OF THE CONTROLS SHALL BE MAINTAINED AT ALL TIMES. THE CONTRACTOR SHALL BE RESPONSIBLE FOR DAILY INSPECTION AND MAINTENANCE OF ALL EROSION CONTROL DEVICES THROUGHOUT THE CONSTRUCTION PHASE OF THE PROJECT. MAINTENANCE SHALL BE IN ACCORDANCE WITH LOCAL GOVERNMENT AGENCY TECHNICAL SPECIFICATIONS, AND THE PROJECT CONSTRUCTION CONTRACT.

THE CONTRACTOR SHALL BE RESPONSIBLE FOR COMPLETING THE FDEP NPDES / STORMWATER POLLUTION PREVENTION PLAN (SWPPP) CONSTRUCTION INSPECTION REPORT AFTER ANY 1/2 INCH RAINFALL OR WEEKLY IF NO RAIN EVENT OCCURRED. IT IS THE CONTRACTOR'S RESPONSIBILITY TO MAINTAIN RAIN GAUGES ON THE PROJECT SITE AND RECORD WEEKLY RAIN FALL. CONTRACTOR SHALL ALSO COMPLETE THE NPDES COMPLIANCE CHECKLIST FOR CONSTRUCTION SITES.

WATER MANAGEMENT DISTRICT – KEY PROVISIONS

AN ENVIRONMENTAL RESOURCE PERMIT (ERP) IS REQUIRED, THE FOLLOWING KEY PROVISIONS MUST BE MAINTAINED BY THE PERMITTEE AND CONTRACTOR: (IN ACCORDANCE WITH THE BASIS OF REVIEW FOR ENVIRONMENTAL RESOURCE PERMIT (ERP) APPLICATIONS)

THE PERMITTEE AND CONTRACTOR SHALL AMEND THE CONSTRUCTION SURFACE WATER MANAGEMENT PLAN WHENEVER THE PROJECT IS ALTERED OR MODIFIED IN A MANNER THAT WILL RESULT IN:

(1) THE POTENTIAL DISCHARGE OF POLLUTANTS

(2) A CHANGE IN THE AMOUNT OF DISCHARGE

(3) A CHANGE IN THE NUMBER OF LOCATION OF STORM WATER DISCHARGE POINTS, OR

(4) ADVERSE IMPACTS TO WETLANDS, AND SUCH CHANGE(S) HAVE NOT OTHERWISE BEEN PREVIOUSLY ADDRESSED IN THE APPROVED PLAN. THE PERMITTEE AND CONTRACTOR SHALL ALSO AMEND THE PLAN IF ITS IMPLEMENTATION DOES NOT ELIMINATE OR MINIMIZE EROSION AND SEDIMENT DEPOSITION, OFF-SITE FLOODING, ADVERSE IMPACTS TO WETLAND, OR VIOLATIONS OF STATE WATER QUALITY STANDARDS. AMENDMENTS TO THE PLAN SHALL BE PREPARED AND KEPT AS SEPARATE DOCUMENTS ALONG WITH THE ORIGINAL PLAN. ALL ALTERATIONS TO THE SYSTEM MUST BE SHOWN ON THE AMENDED PLAN ALONG WITH THE DOCUMENTATION OR REQUIRED APPROVAL(S).

SPILL PREVENTION

MATERIAL MANAGEMENT PRACTICES

THE FOLLOWING ARE THE MATERIAL MANAGEMENT PRACTICES THAT WILL BE USED TO REDUCE THE RISK OF SPILLS OR OTHER ACCIDENTAL EXPOSURE OF MATERIALS AND SUBSTANCES TO STORM WATER RUNOFF.

GOOD HOUSEKEEPING:

THE FOLLOWING GOOD HOUSEKEEPING PRACTICES SHALL BE FOLLOWED ON-SITE DURING THE CONSTRUCTION PROJECT:

AN EFFORT SHALL BE MADE TO STORE ONLY ENOUGH PRODUCTS REQUIRED TO DO THE JOB.

ALL MATERIALS STORED ON-SITE SHALL BE STORED IN A NEAT, ORDERLY MANNER IN THEIR APPROPRIATE CONTAINERS AND, IF POSSIBLE, UNDER A ROOF OR OTHER CONTAINED ENCLOSURE.

PRODUCTS SHALL BE KEPT IN THEIR ORIGINAL MANUFACTURER'S LABELED CONTAINERS. SUBSTANCES SHALL NOT BE MIXED WITH ONE ANOTHER UNLESS RECOMMENDED BY THE MANUFACTURER. WHENEVER POSSIBLE, ALL OF A PRODUCT SHALL BE USED UP BEFORE DISPOSING OF THE CONTAINER. MANUFACTURERS RECOMMENDATIONS FOR PROPER USE AND DISPOSAL SHALL BE FOLLOWED.

THE SITE SUPERINTENDENT SHALL INSPECT DAILY TO ENSURE PROPER USE AND DISPOSAL OF MATERIALS ON-SITE.

THE CONTRACTOR MUST IDENTIFY A DESIGNATED FUEL TANK STORAGE AREA, AWAY FROM DRAINAGE STRUCTURES, PONDS, BASINS, WATERWAYS, AND WETLANDS, WITH SECONDARY CONTAINMENT (SPILL COLLECTION).

PETROLEUM PRODUCTS:

ALL ON-SITE VEHICLES WILL BE MONITORED FOR LEAKS AND RECEIVE REGULAR PREVENTIVE MAINTENANCE TO REDUCE THE CHANCE OF LEAKAGE. PETROLEUM PRODUCTS WILL BE STORED IN TIGHTLY SEALED CONTAINERS, WHICH ARE CLEARLY LABELED. ANY ASPHALT SUBSTANCES USED ON-SITE WILL BE APPLIED ACCORDING TO THE MANUFACTURER'S RECOMMENDATIONS.

FERTILIZERS:

FERTILIZERS USED WILL BE APPLIED ONLY IN THE MINIMUM AMOUNTS RECOMMENDED BY THE MANUFACTURER. ONCE APPLIED, FERTILIZER WILL BE WORKED INTO THE SOIL TO LIMIT EXPOSURE TO STORM WATER. STORAGE WILL BE IN A SEALABLE PLASTIC BIN TO AVOID SPILLS.

CONCRETE TRUCKS:

CONTRACTOR SHALL DESIGNATE AN AREA AWAY FROM DRAINAGE STRUCTURES, PONDS, BASINS, WATERWAYS, AND WETLANDS FOR DISCHARGE OF SURPLUS CONCRETE OR DRUM WASH WATER AND SHALL INSTALL A CONTAINMENT BERM AROUND THIS AREA TO PREVENT RUNOFF TO THE REMAINDER OF THE SITE. HARD DEBRIS SHALL BE DISPOSED OF BY CONTRACTOR UPON COMPLETION OF THE PROJECT. CONTRACTOR TO PREPARE A DETAILED SITE PLAN FOR APPROVAL FOR THE CONCRETE DISCHARGE AND WASH DOWN ACTIVITIES.

SPILL CONTROL PRACTICES

IN ADDITION TO THE GOOD HOUSEKEEPING AND MATERIALS MANAGEMENT PRACTICES DISCUSSED IN THE PREVIOUS SECTIONS OF THIS PLAN, THE FOLLOWING PRACTICES WILL BE FOLLOWED FOR SPILL PREVENTION AND CLEANUP:

* MANUFACTURERS' RECOMMENDED METHODS FOR SPILL CLEANUP WILL BE CLEARLY POSTED AND SITE PERSONNEL WILL BE MADE AWARE OF THE PROCEDURES AND THE LOCATION OF THE INFORMATION CLEANUP SUPPLIES.

•ALL SPILLS WILL BE CLEANED UP IMMEDIATELY AFTER DISCOVERY.

•THE SPILL AREA WILL BE KEPT WELL VENTILATED AND PERSONNEL WILL WEAR APPROPRIATE PROTECTIVE CLOTHING TO PREVENT INJURY FROM CONTACT WITH A HAZARDOUS SUBSTANCE.

•SPILLS OF TOXIC OR HAZARDOUS MATERIAL WILL BE REPORTED TO THE APPROPRIATE STATE OR LOCAL GOVERNMENT AGENCY, REGARDLESS OF THE SIZE.

•THE SPILL PREVENTION PLAN WILL BE PREPARED BY THE CONTRACTOR AND KEPT IN THE CONSTRUCTION OFFICE TRAILER AND WILL INCLUDE MEASURES TO PREVENT THIS TYPE OF SPILL FROM REOCCURRING AND HOW TO CLEAN UP THE SPILL IF THERE ARE OTHERS. A DESCRIPTION OF THE SPILL, WHAT CAUSED IT, AND THE CLEANUP MEASURES WILL ALSO BE INCLUDED. ALL SPILLS AND RESPONSES WILL BE REPORTED TO THE APPROPRIATE AGENCY.

•THE CONTRACTOR WILL BE RESPONSIBLE FOR SPILL PREVENTION AND CLEANUP COORDINATION. HE WILL DESIGNATE OTHER SITE PERSONNEL WHO WILL RECEIVE SPILL PREVENTION AND CLEANUP TRAINING. THESE INDIVIDUALS WILL EACH BECOME RESPONSIBLE FOR A PARTICULAR PHASE OF PREVENTION AND CLEANUP. THE NAMES OF RESPONSIBLE SPILL PERSONNEL WILL BE POSTED IN THE MATERIAL STORAGE AREA AND IN THE OFFICE TRAILER ON SITE. •USE AND CHARACTERISTICS OF FUEL OR CHEMICAL STORAGE TANK ON SITE SHALL COMPLY WITH ALL RELATED FEDERAL, STATE, AND LOCAL REGULATIONS. STORAGE TANKS MUST BE LOCATED AS FAR AS POSSIBLE FROM ANY DRAINAGE STRUCTURES, DITCHES, AND/OR SURFACE WATERS. IN ADDITION, THE CONTRACTOR MUST PROVIDE A SECONDARY CONTAINMENT WITH A LINER CHEMICALLY RESISTANT TO THE FUEL OR CHEMICAL STORED ON SITE. THE SECONDARY CONTAINMENT MUST BE SIZED TO CONTAIN MINIMUM OF ONE AND A HALF TIME THE TOTAL CAPACITY OF STORAGE TANK BEING USED. CONTRACTOR HAS TO PROVIDE A DAILY INSPECTION LOG FOR THE SECONDARY CONTAINMENT WITH INDICATION OF DATE, INSPECTORS NAME AND INSPECTION REPORT.

FURTHERMORE, ANY CONTAMINATION HAS TO BE IMMEDIATELY CONTAINED AND THE OWNERS, ENGINEER OF RECORD AND PERMITTING AGENT INSPECTOR MUST BE NOTIFIED OF THE NATURE AND EXTEND OF THE CONTAMINATION.

INVENTORY FOR POLLUTION PREVENTION PLAN

THE MATERIALS OR SUBSTANCES LISTED BELOW ARE EXPECTED, BUT NOT LIMITED, TO BE PRESENT ON-SITE DURING CONSTRUCTION:

CONCRETE	FERTILIZERS
DETERGENTS	PETROLEUM BASED PRODUCTS AND FUELS
TAR	CLEANING SOLVENTS
SAND	WOOD
STONE	

POLLUTION PREVENTION PLAN CERTIFICATION

I CERTIFY UNDER PENALTY OF LAW THAT THIS DOCUMENT AND ALL ATTACHMENTS HAVE BEEN READ BY ME OR MY DESIGNATED REPRESENTATIVE AND UNDERSTAND THAT THIS SYSTEM HAS BEEN PREPARED TO ASSURE THAT QUALIFIED PERSONNEL PROPERLY GATHER AND EVALUATE THE INFORMATION SUBMITTED. BASED ON MY INQUIRY OF THE PERSONS WHO MANAGE THE SYSTEM, OR THOSE PERSONS DIRECTLY RESPONSIBLE FOR GATHERING THE INFORMATION SUBMITTED IS, TO THE BEST OF MY KNOWLEDGE AND BELIEF, TRUE, ACCURATE AND COMPLETE. I AM AWARE THAT THERE ARE SIGNIFICANT PENALTIES FOR SUBMITTING FALSE INFORMATION, INCLUDING THE POSSIBILITY OF FINE AND IMPRISONMENT FOR KNOWING VIOLATIONS.

OWNER: O'REILLY AUTOMOTIVE STORES, INC.

APPLICANT AUTHORIZED AGENT: _____

SIGNED: _____

ADDRESS: 233 SOUTH PATTERSON
SPRINGFIELD MISSOURI, 65802
PH.: (417) 862-2674 FAX: (417) 829-5715

DATE: _____

CONTRACTOR'S AND ENGINEER'S CERTIFICATION

I CERTIFY UNDER PENALTY OF LAW THAT I UNDERSTAND THE TERMS AND CONDITIONS OF THE GENERAL NATIONAL POLLUTANT DISCHARGE ELIMINATION SYSTEM (NPDES) PERMIT THAT AUTHORIZES THE STORM WATER DISCHARGES ASSOCIATED WITH CONSTRUCTION ACTIVITY FROM THE CONSTRUCTION SITE IDENTIFIED AS PART OF THIS CERTIFICATION. I UNDERSTAND, AND SHALL COMPLY WITH THE TERMS AND CONDITIONS OF THE STATE OF FLORIDA "GENERIC PERMIT FOR STORMWATER DISCHARGE FROM LARGE AND SMALL CONSTRUCTION ACTIVITIES" (CGP), AND THIS STORMWATER POLLUTION PREVENTION PLAN PREPARED FOR O'REILLY AUTO PARTS STORE.

SIGNATURE:	FOR:	RESPONSIBLE FOR:
NAME:	COMPANY:	GENERAL CONTRACTOR
TITLE:	ADDRESS:	
DATE:	PHONE:	

CERTIFIED ENGINEER

NAME: THOMAS M. ROSE, PE
FL. REG. NO. 62860
TITLE: PROJECT MANAGER

COMPANY: CARDNO TBE
380 PARK PLACE BLVD., SUITE 300
CLEARWATER, FL 33759
PHONE: 727-531-3505

NPDES NOTIFICATION (NATIONAL POLLUTION DISCHARGE ELIMINATION SYSTEM)

ATTENTION: FAILURE TO MAINTAIN EROSION AND/OR SEDIMENTATION CONTROLS OR ANY ILLICIT DISCHARGE RESULTING FROM THEIR FAILURE WILL LIKELY RESULT IN FINE CITATIONS. CODE REGULATIONS AUTHORIZES PENALTIES OF UP TO $10,000 FOR EACH OFFENSE.

ALL ACTIVITIES MUST CONFORM WITH FDEP NOTICE OF INTENT TO USE GENERIC PERMIT FOR STORMWATER DISCHARGE FROM LARGE AND SMALL CONSTRUCTION ACTIVITIES. POLLUTION PREVENTION FROM THE PROPOSED CONSTRUCTION ACTIVITIES WILL BE IMPLEMENTED IN ACCORDANCE WITH SWFWMD BASIS OF REVIEW SUBSECTION 2.8.4.

KEY PROVISIONS

1. IMPLEMENTATION OF THIS STORMWATER POLLUTION PREVENTION PLAN (SWPPP).

2. CONDUCTING AND DOCUMENTING ROUTINE INSPECTIONS AS REQUIRED.

3. RETENTION OF RECORDS REQUIRED BY THE PERMIT, INCLUDING RETENTION OF A COPY OF THE SWPPP AT THE CONSTRUCTION SITE, FROM THE DATE OF PROJECT INITIATION TO THE DATE OF FINAL SITE STABILIZATION.

NOTICE OF INTENT (NOI)

A "NOTICE OF INTENT TO USE GENERIC PERMIT FOR STORMWATER DISCHARGE FROM LARGE AND SMALL CONSTRUCTION ACTIVITIES" (NOI) IS NOT REQUIRED FOR THIS SITE SINCE THE PROJECT AREA IS LESS THAN ONE ACRE IN SIZE.

STORMWATER POLLUTION PREVENTION PLAN

THOMAS M. ROSE, PE
FL LICENSE NO. 62860

Cardno TBE
380 Park Place Blvd., Suite 300, Clearwater, Florida, 33759
www.cardnotbe.com - 727.531.3505
Certificate of Authorization No. 3843

CRAIG A. SCHNEIDER, AIA
ARCHITECT
1736 East Sunshine, Suite 417
Springfield, Missouri 65804
417.862.0558
Fax: 417.862.3265
e-mail: architect@estirlyschneider.com

New O'Reilly Auto Parts Store:
S.R. 52
HUDSON, FL
(HUDSON #2)

O'Reilly AUTO PARTS
233 SOUTH PATTERSON
SPRINGFIELD, MISSOURI 65802
417-862-2674 PHONE

COMM #	3539
DATE:	03-21-14
REVISION DATE:	05-06-14

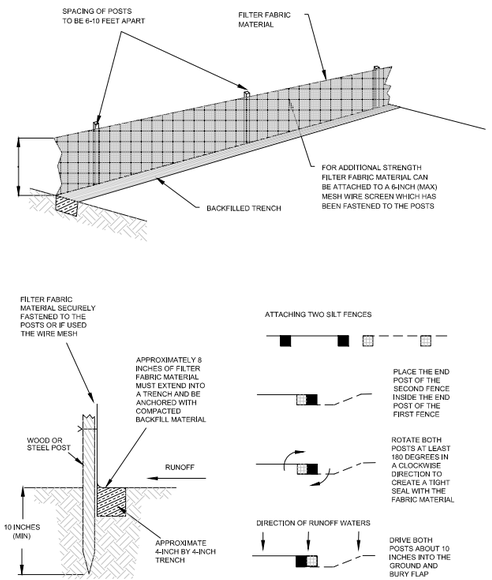

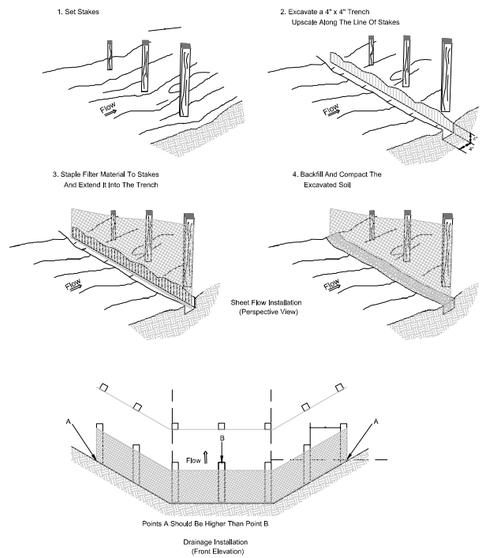

1 INSTALLING A FILTER FABRIC SILT FENCE

C4 SCALE: N.T.S.

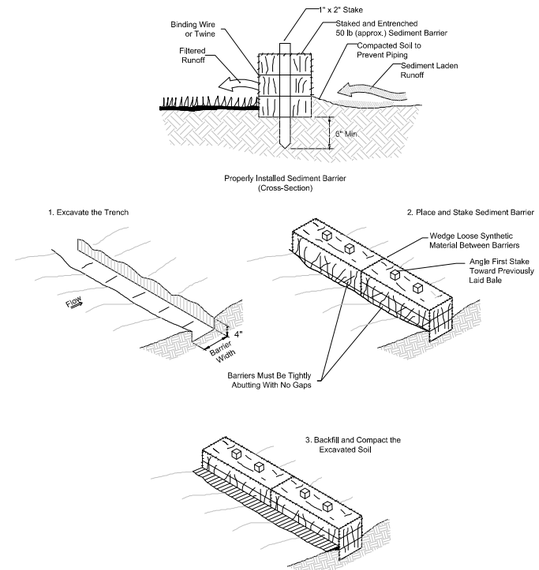

2 TEMPORARY SYNTHETIC SEDIMENT BARRIER

C4 SCALE: N.T.S.

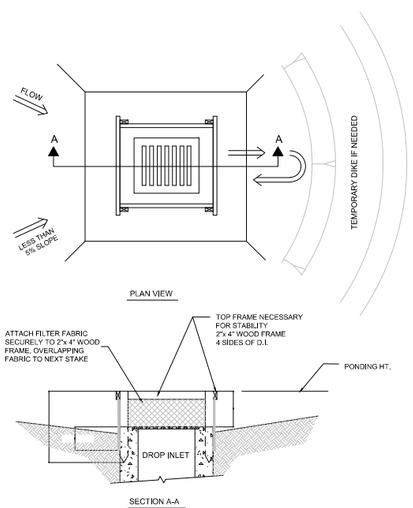

NOTES:
1. DROP INLET SEDIMENT BARRIERS ARE TO BE USED FOR SMALL, NEARLY LEVEL DRAINAGE AREAS, (LESS THAN 5%)
2. USE 2"x 4" WOOD OR EQUIVALENT METAL STAKES, (3 FT. MIN. LENGTH)
3. INSTALL 2"x 4" WOOD TOP FRAME TO INSURE STABILITY.
4. THE TOP OF THE FRAME (PONDING HEIGHT) MUST BE WELL BELOW THE GROUND ELEVATION DOWNSLOPE TO PREVENT RUNOFF FROM BYPASSING THE INLET. A TEMPORARY DIKE MAY BE NECESSARY ON THE DOWNSLOPE SIDE OF THE STRUCTURE.

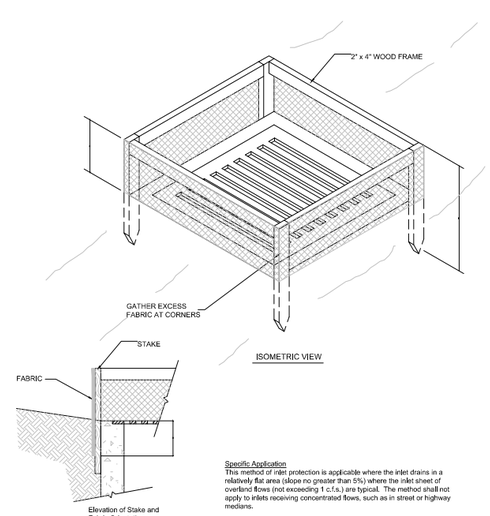

Specific Application
This method of inlet protection is applicable where the inlet drains in a relatively flat area (slope no greater than 5%) where the inlet sheet of overland flows (not exceeding 1 c.f.s.) are typical. The method shall not apply to inlets receiving concentrated flows, such as in street or highway medians.

3 TEMPORARY SEDIMENT BARRIER AT DROP INLET

C4 SCALE: N.T.S.

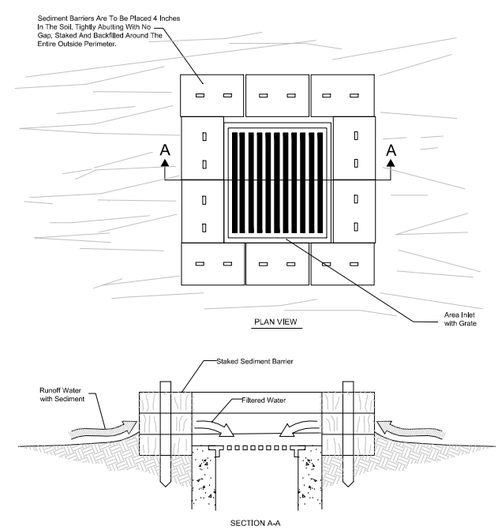

This method of inlet protection is applicable where the inlet drains a relatively flat area (slopes no greater than 5%) where sheet or overland flows (not exceeding 0.5 cfs) are typical. The method shall not apply to inlets receiving concentrated flows, such as street or highway medians.

4 TEMPORARY SYNTHETIC SEDIMENT BARRIER AT STORM DRAIN DROP INLET

C4 SCALE: N.T.S.

EROSION AND SEDIMENTATION CONTROL NOTES

1. IT IS THE RESPONSIBILITY OF THE CONTRACTOR TO CONTROL AND PREVENT EROSION AND THE TRANSPORTATION OF SEDIMENT TO SURFACE DRAINS AND OUTFALLS. REFER TO CONSTRUCTION PLANS, DETAILS, SPECIFICATIONS AND APPROVED PERMITS FOR DETAILS.SEDIMENT DEPOSITS SHALL BE REMOVED WHEN THEY REACH SIX INCHES ON AN EROSION DEVICE.

2. DURING THE CONSTRUCTION OF DRAINAGE STRUCTURES, AND OTHER STRUCTURES REQUIRING EXCAVATION, THE CONTRACTOR SHALL PLACE APPROVED BARRIERS OR OTHER APPROVED DEVICES AROUND SUCH STRUCTURES TO PREVENT EROSION AND THE MIGRATION OF SEDIMENT TO POINTS OUTSIDE THE CONSTRUCTION AREA. THE APPROVED BARRIERS OR OTHER APPROVED DEVICES SHALL BE PLACED IN ACCORDANCE WITH REQUIREMENTS OF F.D.O.T. INDEX NO. 102, FDEP, OR AS DIRECTED BY THE ENGINEER.

3. REQUIRED EROSION CONTROL MEASURES MUST REMAIN INTACT THROUGHOUT CONSTRUCTION. FAILURE TO INSTALL OR PROPERLY MAINTAIN REQUIRED EROSION CONTROL WILL RESULT IN ENFORCEMENT ACTION. ALL EROSION CONTROL MEASURES, SAND, SILT, AND DEBRIS SHALL BE REMOVED FROM ALL DRAINAGE PIPES AND STRUCTURES AFTER CONSTRUCTION HAS BEEN COMPLETED AND PRIOR TO COUNTY FINAL WALK-THROUGH.

4. OUTFALL PROTECTION - PROJECT PIPE OR DITCH DISCHARGES INTO OFF-SITE OUTFALLS SHALL BE INSPECTED DAILY FOR POSSIBLE SEDIMENT BUILDUP OR TRANSPORT. OUTFALLS SHALL BE PROTECTED THROUGH USE OF EROSION CONTROL FEATURES AS NECESSARY TO CONTAIN ANY SEDIMENT LOSS TO THE IMMEDIATE AREA OF THE PROJECT. ANY SEDIMENT BUILDUP OR TRANSPORT OFF-SITE SHALL BE THE CONTRACTOR'S RESPONSIBILITY TO REMEDY. THE CONTRACTOR SHALL USE APPROPRIATE MEASURES AS DIRECTED BY THE PROJECT ENGINEER FOR OUTFALL PROTECTION.

5. APPROVED BARRIERS (OR OTHER APPROVED SEDIMENT CONTROL DEVICES): THESE SHALL BE PLACED AT THE BASE OF ANY SLOPE WHERE A RAINFALL EVENT COULD ERODE A SLOPE AND TRANSPORT SEDIMENTS OFF-SITE. APPROVED BARRIERS SHALL BE DOUBLE STAKED IN ACCORDANCE WITH F.D.O.T. INDEX NO. 102 OR FDEP. IF EROSION DEPOSITS REACH THE TOP ELEVATION OF EXISTING APPROVED BARRIERS, THEN SEDIMENTS SHOULD BE REMOVED. ANY DAMAGED OR INEFFECTIVE APPROVED BARRIERS ARE TO BE REPLACED WITH NEW ONES. THE LOCATION AND INSTALLATION OF APPROVED BARRIERS SHALL BE AS DIRECTED BY THE PROJECT ENGINEER.

6. BACK OF SIDEWALK INLETS OR MEDIAN INLETS: THESE SHALL BE PROTECTED FROM SEDIMENT INTAKE UNTIL PROJECT IS COMPLETE. ELEVATION OF GROUND OUTSIDE INLET TOP SHALL NOT BE HIGHER THAN INLET TOP. APPROVED BARRIERS OR OTHER APPROVED SEDIMENT CONTROL DEVICES SHALL BE INSTALLED AROUND INLET TOP. A SECOND ROW OF APPROVED BARRIERS OR OTHER APPROVED SEDIMENT CONTROL DEVICES SHALL BE PLACED AROUND INLET APPROXIMATELY 4" OUTSIDE FIRST ROW. BETWEEN ROWS THERE SHALL BE A DEPRESSION TO ACT AS A SEDIMENT BASIN. COMPLETED INLETS IN PAVED AREAS SHALL ALSO BE PROTECTED WITH A SINGLE LINE OF APPROVED BARRIERS OR OTHER APPROVED SEDIMENT CONTROL DEVICES TO PREVENT SEDIMENT INTAKE FROM OTHER AREAS.

7. STOCKPILED MATERIALS SHALL BE PROTECTED BY COVER, APPROVED BARRIERS OR OTHER APPROVED SEDIMENT CONTROL DEVICES.

8. ALL DISTURBED AREAS SHALL BE STABILIZED WITHIN 3 DAYS AFTER 1/2" RAIN EVENT DISTURBANCE.

9. SEDIMENT TRAPPING MEASURES: SEDIMENT BASINS AND TRAPS, PERIMETER BERMS, FILTER FENCES, BERMS, SEDIMENT BARRIERS, VEGETATIVE BUFFERS AND OTHER MEASURES INTENDED TO TRAP SEDIMENT AND/OR PREVENT THE TRANSPORT OF SEDIMENT INTO WATERS OF THE STATE OR NEIGHBORING PROPERTIES SHALL BE INSTALLED, CONSTRUCTED OR, IN THE CASE OF VEGETATIVE BUFFERS, PROTECTED FROM DISTURBANCE, AS A FIRST STEP IN THE LAND ALTERATION PROCESS.

10. CONTRACTOR IS RESPONSIBLE FOR OBTAINING THE NECESSARY DEWATERING PERMITS FROM THE LOCAL WATER MANAGEMENT DISTRICT OR OTHER REGULATORY AGENCY.

11. A DEWATERING PLAN MUST BE SUBMITTED AND APPROVED BY THE ENGINEER PRIOR TO DISCHARGE.

12. WHERE PUMPS ARE TO BE USED TO REMOVE TURBID WATER FROM THE CONSTRUCTION AREA, THE WATER SHALL BE TREATED TO REDUCE TURBIDITY TO STATE WATER QUALITY STANDARDS PRIOR TO DISCHARGE TO THE WETLANDS. TREATMENT METHODS INCLUDE, FOR EXAMPLE, TURBID WATER BEING PUMPED INTO GRASSED SWALES OR APPROPRIATE VEGETATED AREAS (OTHER THAN UPLAND PRESERVATION AREAS AND WETLAND BUFFERS), SEDIMENTS BASINS, OR AREAS CONFINED BY AN APPROPRIATE ENCLOSURE SUCH AS TURBIDITY BARRIERS, AND KEPT CONFINED UNTIL ITS TURBIDITY LEVEL MEETS STATE WATER QUALITY STANDARDS.

13. IF WIND EROSION BECOMES SIGNIFICANT DURING CONSTRUCTION, THE CONTRACTOR SHALL STABILIZE THE AFFECTED AREA USING SPRINKLING, IRRIGATION, OR OTHER ACCEPTABLE METHODS.

14. THERE IS TO BE NO DISCHARGE (I.E. PUMPING, SHEET FLOW, SWALE, DITCH, ETC.) INTO EXISTING DITCHES OR CANALS WITHOUT THE USE OF SETTLING PONDS OR DEVICES. IF THE CONTRACTOR DESIRES TO DISCHARGE INTO EXISTING DITCHES OR CANALS A SETTLING PLAN PREPARED BY THE CONTRACTOR MUST BE SUBMITTED TO AND APPROVED BY THE ENGINEER OF RECORD AND LOCAL REGULATORY AGENCY PRIOR TO CONSTRUCTION.

15. WHERE APPLICABLE, SOIL TRACKING PREVENTION DEVICES SHALL BE PROVIDED AND MAINTAINED PER F.D.O.T. INDEX NO. 106 OR FDEP.

16. THE EROSION CONTROL DEVICE QUANTITIES SHOWN ON THE BID FORMS ARE ESTIMATES OF THE ACTUAL QUANTITIES THAT MAY BE ENCOUNTERED DURING CONSTRUCTION. IT IS THE RESPONSIBILITY OF THE CONTRACTOR TO SPECIFY ACTUAL QUANTITIES AND COSTS ASSOCIATED WITH THIS SPECIFIC EROSION CONTROL IMPLEMENTATION SCHEDULE. EROSION CONTROL ITEMS MAY BE ADDED OR DELETED FROM THE PAY ITEM LIST AS THE EROSION CONTROL IMPLEMENTATION SCHEDULE PROVIDED BY THE CONTRACTOR IS MODIFIED TO MEET SITE SPECIFIC CONDITIONS.

17. ALL EROSION CONTROL FENCES, BARRIERS, AND SILTATION DEVICES SHALL BE ERECTED PRIOR TO ANY LAND ALTERATIONS, SHALL BE MAINTAINED IN GOOD WORKING ORDER DURING CONSTRUCTION, AND REMOVED FOLLOWING SOIL STABILIZATION AND FINAL DRESSING. BUILT-UP SEDIMENT WILL BE REMOVED FROM SILT FENCES AND STAKED TURBIDITY BARRIERS WHEN IT HAS REACHED ONE THIRD THE HEIGHT OF THE FENCE/BARRIER. STOCKPILE AREAS SHALL INCLUDE SILT FENCE AROUND THE PERIMETER.

18. THE CONTRACTOR SHALL NOT RESTRICT OR BLOCK THE EXISTING DRAINAGE FLOW OVERLAND OR WITHIN RESHAPED SWALES. FLOW WITHIN EXISTING DRAINAGE PIPES SHALL BE MAINTAINED AT ALL TIMES. STORMWATER WILL BE CONVEYED VIA EXISTING SWALES, DITCHES, OR PROPOSED DITCHES, EXISTING AND PROPOSED STORM SEWERS.

19. DURING DEWATERING OPERATIONS, THE CONTRACTOR SHALL NOT DISCHARGE DIRECTLY TO RECEIVING WATERS, EXISTING CONVEYANCES TO RECEIVING WATERS, OR WETLAND SYSTEMS. TEMPORARY SEDIMENT BASINS, TRAPS, OR SILTATION REDUCTION DEVICES SHALL BE UTILIZED TO COLLECT THE DISCHARGE FROM DEWATERING ACTIVITIES TO ELIMINATE THE POTENTIAL FOR OFF-SITE SEDIMENT TRANSPORT AND TO INSURE THAT DIRECT DISCHARGE DOES NOT OCCUR.

20. BANKS SHALL BE PROTECTED FROM EROSION OR COLLAPSE DURING CONSTRUCTION. BANK PROTECTION MATERIAL SHALL BE CAREFULLY PLACED FROM THE BANK AND NOT DUMPED FROM ABOVE IN AN UNCONTROLLED MANNER. EROSION CONTROL FABRIC SHALL BE USED FOR EROSION PROTECTION WHERE SOD WILL NOT HOLD OR BECOME ESTABLISHED IN TIME TO PROTECT THE BANKS. UNLESS OTHERWISE SPECIFIED IN THE PLANS, UPON COMPLETION OF CONSTRUCTION, ALL BANKS AND WATERWAYS SHALL BE RESTORED TO THEIR PRE- CONSTRUCTION CONFIGURATION AND PROTECTION FROM EROSION.

21. IF APPLICABLE, THE CONTRACTOR SHALL BE RESPONSIBLE FOR PROTECTING POND FILTRATION SYSTEMS FROM BEING CLOGGED UNTIL BREVARD COUNTY DETERMINES THE CONSTRUCTION IS COMPLETE. IF FILTER MATERIAL IS CONTAMINATED, IT SHALL BE REPLACED AT THE EXPENSE OF THE CONTRACTOR.

22. CONTRACTOR TO COORDINATE WITH LOCAL MUNICIPALITY REGARDING PREPARATION AND PERMITTING WITHIN THE NPDES PROGRAM.

EROSION CONTROL DETAILS

THOMAS M. ROSE, PE
FL LICENSE NO. 62860

Cardno TBE
380 Park Place Blvd., Suite 300, Clearwater, Florida, 33759
www.cardnotbe.com - 727.531.3505
Certificate of Authorization No. 3843

CRAIG A. SCHNEIDER, AIA
ARCHITECT
1736 East Sunshine, Suite 417
Springfield, Missouri 65804
417.862.0558
Fax: 417.862.3265
e-mail: architect@esterlyschneider.com

New O'Reilly Auto Parts Store:
S.R. 52
HUDSON, FL
(HUDSON #2)

O'Reilly AUTO PARTS
233 SOUTH PATTERSON
SPRINGFIELD, MISSOURI 65802
417-862-2674 PHONE

COMM #	3539
DATE:	03-21-14
REVISION DATE:	05-06-14

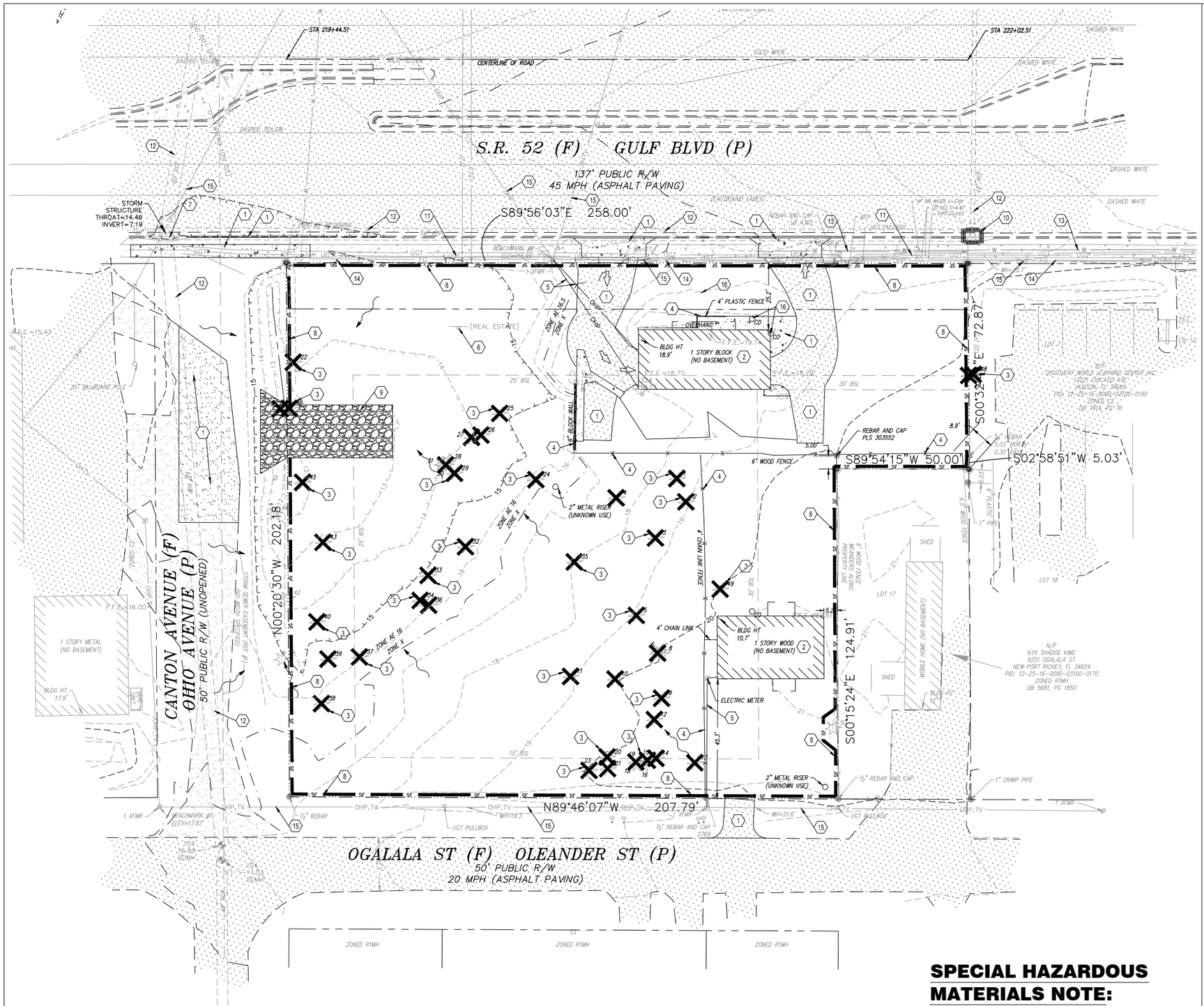

KEY NOTES:

1. REMOVE PAVING
SAWCUT AND REMOVE ASPHALT, CONCRETE, CURBING, GRAVEL, ETC. FULL DEPTH.

2. REMOVE STRUCTURE, BOLLARDS & PLANTERS
REMOVE ENTIRE STRUCTURE AND FOUNDATIONS FULL DEPTH

3. REMOVE LANDSCAPING
REMOVE TREES, PALMS, HEDGEROW, ETC.

4. REMOVE EXISTING FENCE & WALL
REMOVE FENCE, POSTS, ETC. FULL DEPTH

5. REMOVE UTILITY SERVICE
REMOVE EXISTING UTILITY SERVICES TO BLDG. COORDINATE REMOVAL AND RELOCATION WITH UTILITY PROVIDER.

6. REMOVE EXISTING SIGN
REMOVE SIGN, POSTS, ETC. FULL DEPTH

7. EXISTING CURB INLET
REMOVE EXISTING CURB INLET TOP AND REPLACE WITH FDOT INDEX 220 TYPE S WITH RETICULINE GRATE. REFER TO DETAIL X/CX.

8. INITIAL SILT FENCE LOCATION
(REFER TO DETAIL 1/C4)

9. SOIL TRACKING PREVENTION DEVICE
(REFER TO DETAIL 1/C2)

10. EROSION PROTECTION AROUND STRUCTURE
SYNTHETIC HAY PROTECTION (SOCK). REFER TO DETAIL 4/C4.

11. UNDERGROUND TELEPHONE
EXISTING TELEPHONE LINE AND APPURTENANCES TO REMAIN UNLESS OTHERWISE NOTED.

12. STORM SEWER
EXISTING STORM STRUCTURES AND ASSOCIATED PIPE TO REMAIN

13. POTABLE WATER
EXISTING POTABLE WATER AND APPURTENANCES TO REMAIN UNLESS OTHERWISE NOTED.

14. FIBER OPTIC
EXISTING FIBER LINE AND APPURTENANCES TO REMAIN UNLESS OTHERWISE NOTED.

15. UTILITIES
EXISTING UTILITIES TO REMAIN UNLESS OTHERWISE NOTED. ANY REMOVAL OR RELOCATION TO BE COORDINATED THROUGH UTILITY PROVIDER.

16. REMOVE EXISTING SANITARY
REMOVE EXISTING SANITARY PIPING, CLEAN OUTS, SEPTIC TANK, DRAINFIELD, ETC.

GENERAL NOTES:

1. REFER TO PROJECT MANUAL FOR ADDITIONAL REQUIREMENTS.
2. COORDINATE WORK WITH OTHER SITE RELATED DEVELOPMENT DRAWINGS.
3. ANY EXISTING SIDEWALK IN DISREPAIR TO BE SAWCUT, REMOVED, AND REPLACED.
4. CONTRACTOR TO FIELD VERIFY LOCATION OF ALL UTILITIES PRIOR TO DEMOLITION AND/OR CONSTRUCTION.
5. CONTRACTOR TO CUT, CAP, AND REMOVE ALL EXISTING UTILITIES TO THE PROPERTY LINE NOT TO BE REROUTED AND/OR REUSED (I.E. GAS LINE, ELECTRICAL, POWER POLES, WATER, IRRIGATION, TELECOMMUNICATION, ETC.)
6. PRIOR TO INSTALLATION, GENERAL CONTRACTOR TO CONFIRM THAT LIGHT POLES, LANDSCAPING AND UTILITIES DO NOT CONFLICT WITH SIGN LOCATION SHOWN. IF ANY POTENTIAL CONFLICT IS DISCOVERED, GENERAL CONTRACTOR TO CONTACT THE O'REILLY PROJECT ADMINISTRATOR BEFORE PROCEEDING.
7. ALL AREAS DISTURBED IN THE RIGHT OF WAY SHALL BE RETURNED TO ORIGINAL CONDITION OR BETTER.
8. CONTRACTOR IS TO INSPECT EXISTING STORM STRUCTURE, BOX, AND PIPING IN FDOT ROW WITHIN THE VICINITY OF THE SITE FOR ANY DAMAGE PRIOR TO DEMOLITION AND CONSTRUCTION. IF THE STRUCTURAL INTEGRITY OF THE STORM SYSTEM HAS BEEN COMPROMISED, THE CONTRACTOR IS TO CONTACT FDOT BROOKSVILLE MAINTENANCE YARD IMMEDIATELY. IF DAMAGE IS DISCOVERED AFTER COMMENCEMENT OF DEMOLITION OR CONSTRUCTION, THE CONTRACTOR MAY BE RESPONSIBLE FOR REPAIR AND REPLACEMENT OF THE STORM SYSTEM.

SYMBOLS LEGEND

REFER TO SURVEY FOR EXISTING CONDITION SYMBOLS LEGEND

- EXISTING IMPROVEMENTS TO BE REMOVED
- PROPERTY LINE
- CENTER LINE
- RIGHT-OF-WAY
- SF — SILT FENCE
- AREA OF CONCRETE DEMOLITION
- AREA OF ASPHALT DEMOLITION
- SOIL TRACKING PREVENTION DEVICE
- INLET PROTECTION
- TREES TO BE REMOVED
- TREE BARRICADE

SPECIAL HAZARDOUS MATERIALS NOTE:

1. AN ENVIRONMENTAL ANALYSIS HAS BEEN PERFORMED ON THE EXISTING SITE. REFER TO PROJECT MANUAL.
2. IF THIS PROJECT CONTAINS HAZARDOUS MATERIALS CONTRACTOR IS TO PROVIDE PROPER HANDLING, REMOVAL AND DISPOSAL PER ENVIRONMENTAL ANALYSIS RECOMMENDATIONS.

SITE DEMOLITION PLAN

SCALE: 1" = 20'

0 20' 40'

N

THOMAS M. ROSE, PE
FL LICENSE NO. 62860

Cardno TBE
380 Park Place Blvd., Suite 300, Clearwater, Florida, 33759
www.cardnotbe.com - 727.531.3505
Certificate of Authorization No. 3843

CRAIG A. SCHNEIDER, AIA
ARCHITECT
1736 East Sunshine, Suite 417
Springfield, Missouri 65804
417.862.0558
Fax: 417.862.3265
e-mail: architect@estertyschneider.com

New O'Reilly Auto Parts Store:
S.R. 52
HUDSON, FL
(HUDSON #2)

O'Reilly AUTO PARTS
233 SOUTH PATTERSON
SPRINGFIELD, MISSOURI 65802
417-862-2674 PHONE

COMM #	3539
DATE:	03-21-14
REVISION DATE:	05-06-14

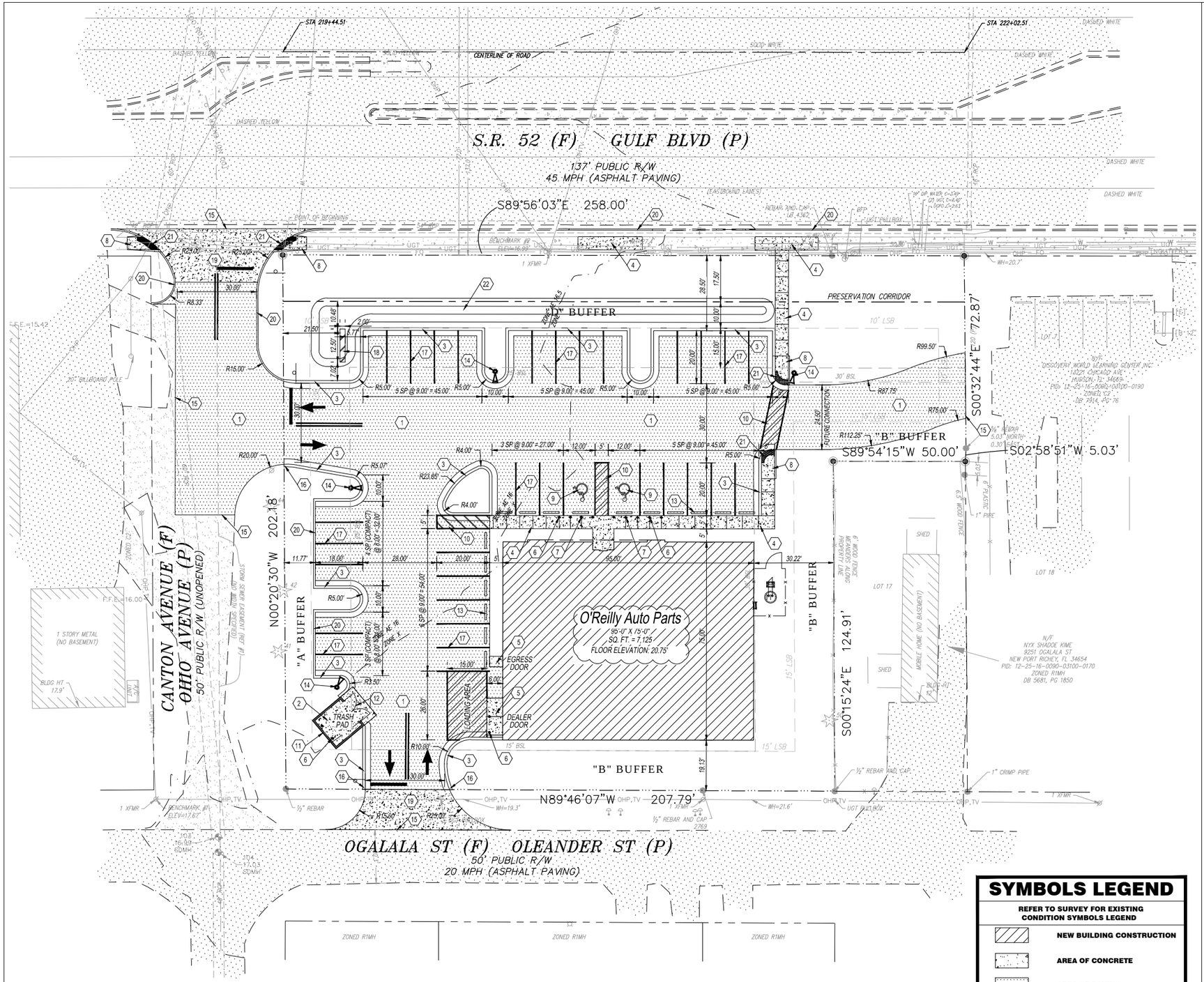

KEY NOTES:

1. CONCRETE PAVING:
REFER TO DETAILS 2/C9 & 6/C9.

ALTERNATE #1:
ASPHALT PAVING REFER TO DETAIL 1/C9.
REFER TO PROJECT MANUAL.

2. CONCRETE DUMPSTER PAD:
REFER TO DETAIL 2/C9.

3. CONCRETE CURB:
REFER TO DETAIL 13/C9.

4. CONCRETE SIDEWALK:
REFER TO DETAILS 5/C9,10/C9, AND 3/C11.

5. CONCRETE DOOR LANDING:
REFER TO DETAIL AND STRUCTURAL DETAILS. RAMP PAVING AS INDICATED. LANDING CAN BE POURED MONOLITHIC IF CONCRETE PAVING IS USED.

6. STEEL BOLLARD:
REFER TO DETAIL 12/C9. PROVIDE (2) AT TRASH PAD AND OVERHEAD DOOR. PROVIDE (9) AT FRONT ENTRANCE. REFER TO STRUCTURAL PLAN FOR LOCATION.

7. HANDICAP PARKING SIGN:
REFER TO DETAIL 8/C9.

8. CONCRETE CURB RAMP:
REFER TO DETAIL 2/C14 & 4/C14.

9. HANDICAP PARKING SYMBOL:
REFER TO DETAIL 4/C9.

10. HANDICAP ACCESS UNLOADING ZONE:
SLOPE 2% MAX. EACH WAY AND STRIPE ADA COMPLIANT.

11. DUMPSTER ENCLOSURE:
PER DETAILS 1/C10 & 2/C10.

12. SCREEN FENCE GATE:
REFER TO DETAIL 1/C10.

13. CONCRETE BUMPER BLOCK:
8"w x 6"h x 6'-0" LONG CONCRETE. ANCHOR TO PAVING WITH (2)
1'-6" LONG #4 REBAR (TO SIT LEVEL WITH PAVING).
REFER TO DETAIL 7/C9.

14. PARKING LOT LIGHTING:
REFER TO SITE ELECTRICAL PLAN FOR LOCATION AND TYPE.

15. LIMITS OF NEW PAVING:
MATCH EXISTING PER CITY AND OR STATE STANDARDS.

16. ROLL DOWN CURB:
TERMINATE AND ROLL DOWN NEW CURB WHERE INDICATED. ROLL DOWN AT 1:2.

17. STRIPING:
PROVIDE 4" WIDE PARKING LOT STRIPING AS SHOWN. USE HIGHWAY MARKING PAINT - WHITE (2 COATS)

18. SIGN LOCATION:
SIGN FURNISHED AND INSTALLED BY OWNER. REFER TO STRUCTURAL & ELECTRICAL PLAN FOR DETAILS.

19. CONCRETE DRIVE APRON:
DRIVEWAY TO BE INSTALLED PER FDOT INDEX NO. 515. REFER TO DETAILS 2/C9 AND DETAILS 2/C15 & 4/C15.

20. CONCRETE CURB
TYPE 'D' CURB PER FDOT INDEX NO. 300
REFER TO DETAIL 1/C14

21. DETECTABLE WARNING SURFACE
FURNISH AND INSTALL DETECTABLE WARNING SURFACE PER FDOT INDEX NO. 304

22. LANDSCAPE BERM
18" HIGH EARTHEN BERM

SITE DATA TABLE:

1. SITE ADDRESS: 9232 STATE RD. 52

2. GROSS SITE AREA: 46,003 SF (1.056 AC)

3. EXISTING LAND USE: CG GENERAL COMMERCIAL
FUTURE LAND USE: ROR
ZONING DISTRICT: C-2
REZONING: R2 6909 4-27-10

4. BUILDING SETBACKS

REQUIRED	LANDSCAPE BUFFERS REQUIRED
FRONT - 25 FT	FRONT - 10 FT
SIDE - 30 FT	SIDE - 15 FT
STREET SIDE - 25 FT	STREET SIDE - 10 FT
REAR - 15 FT	REAR - 15 FT

5. SITE AREA (EXISTING):

PAVING AND CONCRETE	2,758 SF (6.00%)
BUILDING AREA	2,085 SF (4.53%)
TOTAL IMPERVIOUS AREA	4,843 SF (10.53%)
PERVIOUS AREA	41,160 SF (89.47%)
GROSS SITE AREA	46,003 SF (100%)

6. SITE AREA (PROPOSED):

PAVING AND CURB	19,440 SF (42%)
BUILDING AREA	7,125 SF (15%)
CONCRETE	950 SF (2%)
TOTAL IMPERVIOUS AREA	27,515 SF (60%)
PERVIOUS AREA	18,488 SF (40%)
GROSS SITE AREA	46,003 SF (100%)
FLOOR AREA RATIO	7,125/46,003 = 0.154 (15%)

7. PARKING REQUIREMENTS:
1 SPACE PER 300 SF OF GROSS FLOOR AREA

PARKING SPACES REQUIRED:	24 SPACES
PARKING SPACES PROVIDED:	
REGULAR PARKING	29 SPACES
COMPACT PARKING	7 SPACES
HANDICAP	2 SPACES
TOTAL PARKING SPACES PROVIDED	38 SPACES

8. FLOOD ZONE:
A PORTION OF THIS PROPERTY LIES WITHIN FLOOD ZONE "AE 16" AS DEPICTED ON FLOOD INSURANCE RATE MAP NO. 1202300185D, EFFECTIVE DATE SEPT 30, 1992.

9. THERE ARE NO ENVIRONMENTALLY SENSITIVE AREAS ON THIS SITE.

10. ALL MECHANICAL EQUIPMENT SHALL BE SCREENED IN ACCORDANCE WITH ALL APPLICABLE PASCO COUNTY REQUIREMENTS.

11. BUILDING HEIGHT: 19 FT 6 IN

12. NO MEZZANINE

WATER & SANITARY SEWER
AUTHORITY: PASCO COUNTY UTILITIES
ADDRESS: 7530 LITTLE ROAD, SUITE 205
NEW PORT RICHEY, LF 34654
PHONE #: 727-847-8145

TELEPHONE
AUTHORITY: VERIZON FLORIDA INC
ADDRESS: 1909 U.S. HWY 301 N
TAMPA, FL 33619
PHONE#: 813-627-8343

POWER
AUTHORITY: WITHLACOOCHEE RIVER ELECTRIC COOPERATIVE
ADDRESS: 12013 HAYS BLVD
SHADY HILLS, FL 34610
PHONE #: 727-868-9465

GENERAL NOTES:

A. REFER TO PROJECT MANUAL FOR ADDITIONAL REQUIREMENTS.

B. ALL SITE DIMENSIONS TO THE GUTTER LINE OF CURB, CONCRETE OR PROPERTY LINE UNLESS OTHERWISE NOTED. CONTRACTOR TO FIELD VERIFY EXISTING CONDITIONS BY DETAILED INSPECTION PRIOR TO SUBMITTING BID AND STARTING CONSTRUCTION.

C. COORDINATE WORK WITH OTHER SITE RELATED DEVELOPMENT DRAWINGS.

D. REFER TO STRUCTURAL PLANS FOR DEVELOPMENT OF SIDEWALKS ADJACENT TO FOUNDATIONS.

E. ANY EXISTING SIDEWALK IN DISREPAIR TO BE REPLACED.

F. CONTRACTOR TO REPAIR / REPLACE DAMAGED SIDEWALK PER DETAIL 10/C9.

G. SITE IMPROVEMENTS SHALL BE INSTALLED IN ACCORDANCE WITH PASCO COUNTY AND O'REILLY CONSTRUCTION SPECIFICATIONS.

H. PRIOR TO INSTALLATION, GENERAL CONTRACTOR TO CONFIRM THAT LIGHT POLES, LANDSCAPING AND UTILITIES DO NOT CONFLICT WITH SIGN LOCATION SHOWN. IF ANY POTENTIAL CONFLICT IS DISCOVERED, GENERAL CONTRACTOR TO CONTACT THE O'REILLY PROJECT ADMINISTRATOR BEFORE PROCEEDING.

SYMBOLS LEGEND

REFER TO SURVEY FOR EXISTING CONDITION SYMBOLS LEGEND

- NEW BUILDING CONSTRUCTION
- AREA OF CONCRETE
- AREA OF PAVING
- NEW MONUMENT SIGN LOCATION
- NEW CONCRETE WHEELSTOP
- NEW LIGHT POLE LOCATION
- NEW FENCE CONSTRUCTION
- PROPERTY LINE
- CENTER LINE
- RIGHT-OF-WAY

SITE DEVELOPMENT PLAN

SCALE: 1" = 20'

0 20' 40'

N

THOMAS M. ROSE, PE
FL LICENSE NO. 62860

Cardno TBE
380 Park Place Blvd., Suite 300, Clearwater, Florida, 33759
www.cardnotbe.com - 727.531.3505
Certificate of Authorization No. 3843

CRAIG A. SCHNEIDER, AIA
ARCHITECT
1736 East Sunshine, Suite 417
Springfield, Missouri 65804
417.862.0558
Fax: 417.862.3265
e-mail: architect@estertyschneider.com

New O'Reilly Auto Parts Store:
S.R. 52
HUDSON, FL
(HUDSON #2)

O'Reilly AUTO PARTS
233 SOUTH PATTERSON
SPRINGFIELD, MISSOURI 65802
417-862-2674 PHONE

COMM #	3539
DATE:	03-21-14
REVISION DATE:	05-06-14

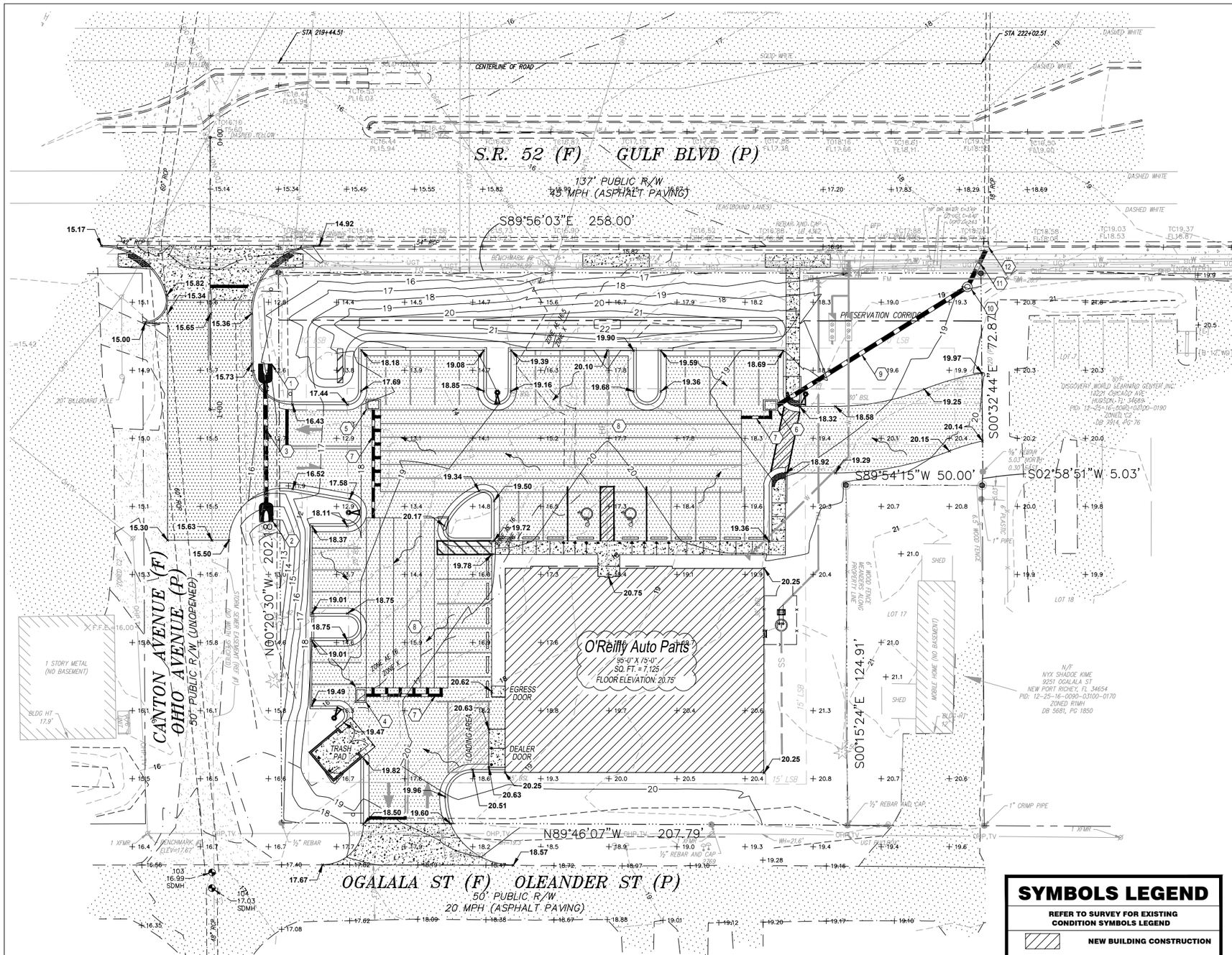

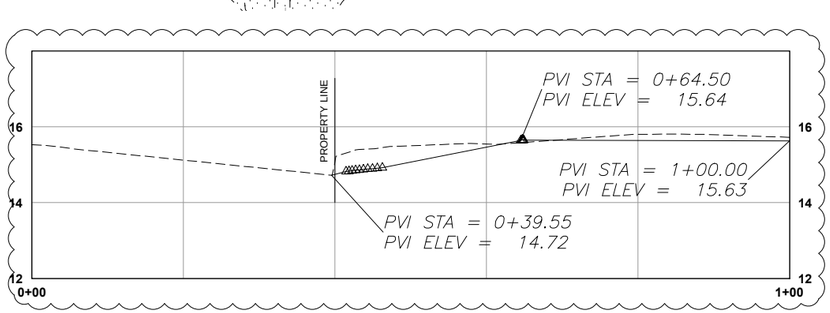

SYMBOLS LEGEND

REFER TO SURVEY FOR EXISTING CONDITION SYMBOLS LEGEND

- NEW BUILDING CONSTRUCTION
- AREA OF CONCRETE
- AREA OF PAVING
- NEW MONUMENT SIGN LOCATION
- NEW CONCRETE WHEEL STOP
- NEW LIGHT POLE LOCATION
- NEW FENCE CONSTRUCTION
- PROPERTY LINE
- CENTER LINE
- RIGHT-OF-WAY
- HP — HIGH POINT
- 14.00 — PAVING ELEVATION
- 14.00 / 13.50 — TOP OF CURB ELEVATION / PAVING ELEVATION

KEY NOTES:

1. STORM STRUCTURE MES-1
   FDOT 18-INCH MITERED END SECTION
   FDOT INDEX 273
   INV ELEV = 12.50'
2. STORM STRUCTURE MES-2
   FDOT 18-INCH MITERED END SECTION
   FDOT INDEX 273
   INV ELEV = 12.50'
3. STORM WATER PIPING
   60 LF 18" DIAMETER CLASS IV RCP
4. STORM STRUCTURE ST-1
   FDOT DITCH BOTTOM INLET TYPE 'F'
   FDOT INDEX NO. 233
   TOP GRATE ELEV = 19.30'
   INV ELEV = 13.00'
   REFER TO DETAIL 1/C17
5. STORM STRUCTURE ST-2
   FDOT DITCH BOTTOM INLET TYPE 'F'
   FDOT INDEX NO. 233
   TOP GRATE ELEV = 17.85'
   INV ELEV = 13.00'
   REFER TO DETAIL 1/C17
6. STORM STRUCTURE ST-3
   FDOT DITCH BOTTOM INLET TYPE 'F'
   FDOT INDEX NO. 233
   TOP GRATE ELEV = 18.25'
   INV ELEV = 13.00'
   REFER TO DETAIL 1/C17
7. STORM WATER PIPING
   12" DIAMETER HEADER PIPE PER DETAIL
8. CHAMBER SYSTEM
   TYPE SC-740 CHAMBER SYSTEM
   162 CHAMBERS: 6 ROWS. SEE DETAILS.
9. STORM WATER PIPING
   85 LF 18" DIAMETER A-2000 PVC PIPE OR EQUIVALENT
10. STORM CONTROL STRUCTURE
    MODIFIED FDOT MANHOLE WITH TYPE 'J' BOTTOM
    RIM ELEV = 19.50'
    INV ELEV (W) = 12.50'
    INV ELEV (E) = 12.50'
11. STORM WATER PIPING
    18 LF 18" DIAMETER A-2000 PVC PIPE OR EQUIVALENT
12. STORM CONNECTION
    CONNECT TO EXIST CURB INLET W/ WRAPPED CONNECTION & 18" PIPE FROM OUTFALL STRUCTURE
    INV S = 12.50'

GENERAL NOTES:

A. REFER TO PROJECT MANUAL FOR ADDITIONAL REQUIREMENTS.

B. ALL SITE DIMENSIONS TO THE GUTTER LINE OF CURB, CONCRETE OR PROPERTY LINE UNLESS OTHERWISE NOTED. CONTRACTOR TO FIELD VERIFY EXISTING CONDITIONS BY DETAILED INSPECTION PRIOR TO SUBMITTING BID AND STARTING CONSTRUCTION.

C. CONTRACTOR SHALL FIELD VERIFY PROPOSED GRADES MATCH EXISTING PAVEMENT AT DRIVEWAY ENTRANCES. CONTRACTOR SHALL NOTIFY ENGINEER IF DISCREPANCY OCCURS.

D. COORDINATE WORK WITH OTHER SITE RELATED DEVELOPMENT DRAWINGS.

E. REFER TO STRUCTURAL PLANS FOR DEVELOPMENT OF SIDEWALKS ADJACENT TO FOUNDATIONS.

F. SITE IMPROVEMENTS SHALL BE INSTALLED IN ACCORDANCE WITH PASCO COUNTY AND O'REILLY CONSTRUCTION SPECIFICATIONS.

G. PRIOR TO INSTALLATION, GENERAL CONTRACTOR TO CONFIRM THAT LIGHT POLES, LANDSCAPING AND UTILITIES DO NOT CONFLICT WITH SIGN LOCATION SHOWN. IF ANY POTENTIAL CONFLICT IS DISCOVERED, GENERAL CONTRACTOR TO CONTACT THE O'REILLY PROJECT ADMINISTRATOR BEFORE PROCEEDING.

STORMWATER SUMMARY:

STORMWATER BASIN AREA = 0.97 ACRES

ON-SITE AREAS OF RUNOFF COEFFICIENTS:
PRE-DEVELOPMENT
CURVE NUMBER = 43
DRAINAGE BASIN = 0.97 ACRES

POST-DEVELOPMENT
TREATMENT VOLUME = 1,779 CF
METHOD OF TREATMENT = DRY RETENTION
CURVE NUMBER = 39 DCIA 55%

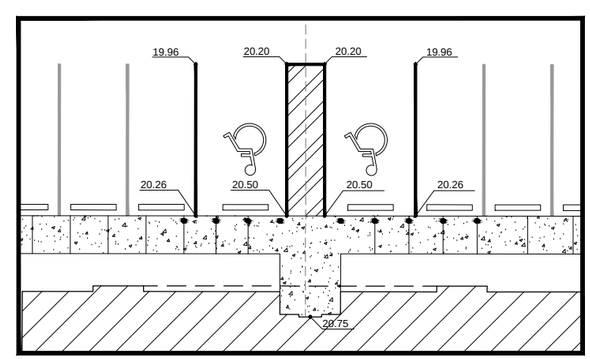

HANDICAP PARKING DETAIL

SCALE: 1" = 10'

SITE GRADING PLAN

SCALE: 1" = 20'

0 20' 40'

N

THOMAS M. ROSE, PE
FL LICENSE NO. 62860

Cardno TBE
380 Park Place Blvd., Suite 300, Clearwater, Florida, 33759
www.cardnotbe.com - 727.531.3505
Certificate of Authorization No. 3843

CRAIG A. SCHNEIDER, AIA
ARCHITECT
1736 East Sunshine, Suite 417
Springfield, Missouri 65804
417.862.0558
Fax: 417.862.3265
e-mail: architect@estertlyschneider.com

New O'Reilly Auto Parts Store:
S.R. 52
HUDSON, FL
(HUDSON #2)

O'Reilly AUTO PARTS
233 SOUTH PATTERSON
SPRINGFIELD, MISSOURI 65802
417-862-2674 PHONE

COMM #	3539
DATE:	03-21-14
REVISION DATE:	05-06-14

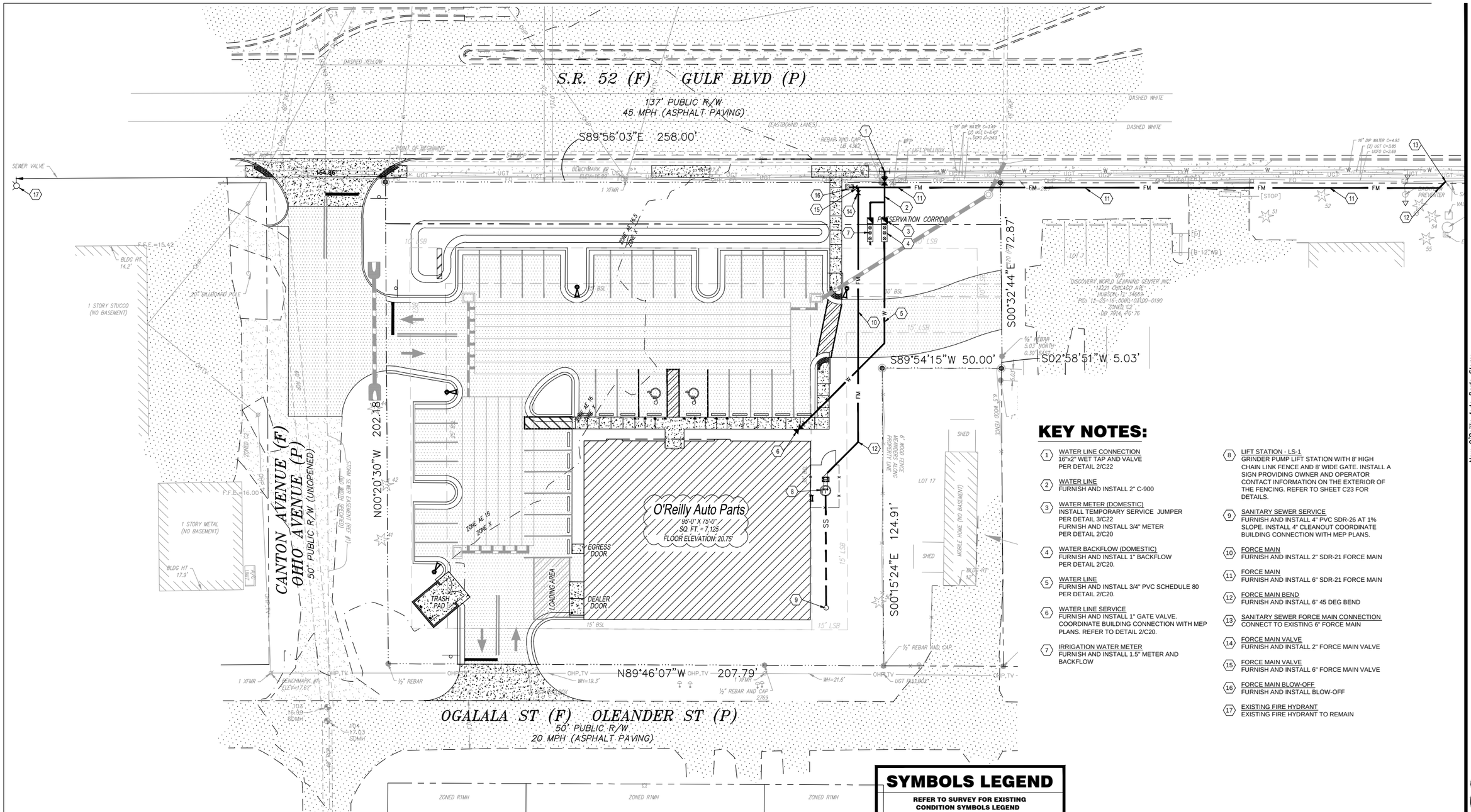

KEY NOTES:

1. WATER LINE CONNECTION
16"x2" WET TAP AND VALVE
PER DETAIL 2/C22

2. WATER LINE
FURNISH AND INSTALL 2" C-900

3. WATER METER (DOMESTIC)
INSTALL TEMPORARY SERVICE JUMPER
PER DETAIL 3/C22
FURNISH AND INSTALL 3/4" METER
PER DETAIL 2/C20

4. WATER BACKFLOW (DOMESTIC)
FURNISH AND INSTALL 1" BACKFLOW
PER DETAIL 2/C20.

5. WATER LINE
FURNISH AND INSTALL 3/4" PVC SCHEDULE 80
PER DETAIL 2/C20.

6. WATER LINE SERVICE
FURNISH AND INSTALL 1" GATE VALVE.
COORDINATE BUILDING CONNECTION WITH MEP PLANS. REFER TO DETAIL 2/C20.

7. IRRIGATION WATER METER
FURNISH AND INSTALL 1.5" METER AND BACKFLOW

8. LIFT STATION - LS-1
GRINDER PUMP LIFT STATION WITH 8' HIGH CHAIN LINK FENCE AND 8' WIDE GATE. INSTALL A SIGN PROVIDING OWNER AND OPERATOR CONTACT INFORMATION ON THE EXTERIOR OF THE FENCING. REFER TO SHEET C23 FOR DETAILS.

9. SANITARY SEWER SERVICE
FURNISH AND INSTALL 4" PVC SDR-26 AT 1% SLOPE. INSTALL 4" CLEANOUT COORDINATE BUILDING CONNECTION WITH MEP PLANS.

10. FORCE MAIN
FURNISH AND INSTALL 2" SDR-21 FORCE MAIN

11. FORCE MAIN
FURNISH AND INSTALL 6" SDR-21 FORCE MAIN

12. FORCE MAIN BEND
FURNISH AND INSTALL 6" 45 DEG BEND

13. SANITARY SEWER FORCE MAIN CONNECTION
CONNECT TO EXISTING 6" FORCE MAIN

14. FORCE MAIN VALVE
FURNISH AND INSTALL 2" FORCE MAIN VALVE

15. FORCE MAIN VALVE
FURNISH AND INSTALL 6" FORCE MAIN VALVE

16. FORCE MAIN BLOW-OFF
FURNISH AND INSTALL BLOW-OFF

17. EXISTING FIRE HYDRANT
EXISTING FIRE HYDRANT TO REMAIN

SYMBOLS LEGEND

REFER TO SURVEY FOR EXISTING CONDITION SYMBOLS LEGEND

- NEW BUILDING CONSTRUCTION
- AREA OF CONCRETE
- AREA OF PAVING
- NEW MONUMENT SIGN LOCATION
- NEW CONCRETE WHEEL STOP
- NEW LIGHT POLE LOCATION
- NEW FENCE CONSTRUCTION
- PROPERTY LINE
- CENTER LINE
- RIGHT-OF-WAY

GENERAL NOTES:

A. REFER TO PROJECT MANUAL FOR ADDITIONAL REQUIREMENTS.

B. ALL SITE DIMENSIONS TO THE GUTTER LINE OF CURB, CONCRETE OR PROPERTY LINE UNLESS OTHERWISE NOTED. CONTRACTOR TO FIELD VERIFY EXISTING CONDITIONS BY DETAILED INSPECTION PRIOR TO SUBMITTING BID AND STARTING CONSTRUCTION.

C. COORDINATE WORK WITH OTHER SITE RELATED DEVELOPMENT DRAWINGS.

D. REFER TO STRUCTURAL PLANS FOR DEVELOPMENT OF SIDEWALKS ADJACENT TO FOUNDATIONS.

E. SITE IMPROVEMENTS SHALL BE INSTALLED IN ACCORDANCE WITH PASCO COUNTY AND O'REILLY CONSTRUCTION SPECIFICATIONS.

F. PRIOR TO INSTALLATION, GENERAL CONTRACTOR TO CONFIRM THAT LIGHT POLES, LANDSCAPING AND UTILITIES DO NOT CONFLICT WITH SIGN LOCATION SHOWN. IF ANY POTENTIAL CONFLICT IS DISCOVERED, GENERAL CONTRACTOR TO CONTACT THE O'REILLY PROJECT ADMINISTRATOR BEFORE PROCEEDING.

G. LOCATION OF EXISTING UTILITIES ARE APPROXIMATE AND MUST BE FIELD VERIFIED PRIOR TO BUILDING CONSTRUCTION. UTILITY ADJUSTMENTS MAY BE REQUIRED TO LOCATE EXISTING SERVICES BEYOND BUILDING FOUNDATION.

STANDARD FIRE PROTECTION NOTES:

1. ALL PROJECTS MUST COMPLY WITH PASCO COUNTY FIRE HYDRANT ORDINANCE NO. 46-51.
2. FIRE HYDRANTS MUST BE IN INSTALLED AND IN SERVICE PRIOR TO THE ACCUMULATION OF COMBUSTIBLES.
3. PER NATIONAL FIRE PROTECTION ASSOCIATION, NFPA 1; 16.4.3.1.3: WHERE UNDERGROUND WATER MAINS AND HYDRANTS ARE TO BE PROVIDED, THEY SHALL BE INSTALLED, COMPLETED AND IN SERVICE PRIOR TO CONSTRUCTION WORK.
4. PER NFPA-1, 18.3.4.1: CLEARANCES OF 7 ½ FEET IN FRONT OF AND TO THE SIDES OF THE FIRE HYDRANT WITH A 4 FOOT CLEARANCE TO THE REAR MUST BE MAINTAINED AT ALL TIMES.
5. GATED ENTRIES REQUIRE A SIREN OPERATING SYSTEM OR A 3M OPTICOM SYSTEM FOR EMERGENCY ACCESS.

SITE UTILITY PLAN

SCALE: 1" = 20'

0 20' 40'

N

THOMAS M. ROSE, PE
FL LICENSE NO. 62860

Cardno TBE
380 Park Place Blvd., Suite 300, Clearwater, Florida, 33759
www.cardnotbe.com - 727.531.3505
Certificate of Authorization No. 3843

CRAIG A. SCHNEIDER, AIA
ARCHITECT
1736 East Sunshine, Suite 417
Springfield, Missouri 65804
417.862.0558
Fax: 417.862.3265
e-mail: architect@estertyschneider.com

New O'Reilly Auto Parts Store:
S.R. 52
HUDSON, FL
(HUDSON #2)

O'Reilly AUTO PARTS
233 SOUTH PATTERSON
SPRINGFIELD, MISSOURI 65802
417-862-2674 PHONE

COMM #	3539
DATE:	03-21-14
REVISION DATE:	05-06-14

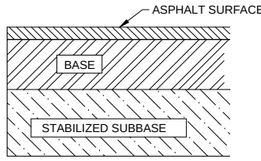

		LIGHT DUTY (<30,000 E_{18} SAL's CARS ONLY)	HEAVY DUTY (<50,000 E_{18} SAL's)
ASPHALT SURFACE COURSE	TYPE S-III OR OTHER SUITABLE MIX DESIGN ACCORDING TO FDOT (SECTION 330 AND 331)	1.5 INCHES	2.5 INCHES
BASE	FDOT LIMEROCK (SECTION 200) LBR=100 SOIL CEMENT (SECTION 270) 7-DAY STRENGTH = 300 PSI, OR WASHED CONCRETE (IF APPROVED BY COUNTY/ CITY ENGINEER) COMPACTED TO A MINIMUM OF 98% (95% SOIL CEMENT) OF THE MINIMUM DRY DENSITY MODIFIED PROCTOR TEST (AASHTO T-134)	6 INCHES	8 INCHES
*STABILIZED SUBBASE	COMPACTED STABILIZED SUBBASE (SECTION 160) TO A MINIMUM 98% MAX DRY DENSITY PER MODIFIED PROCTOR TEST (MIN LBR 40)	12 INCHES	12 INCHES

NOTES:
REFER TO GEOTECHNICAL REPORT BY TERRACON FOR PAVEMENT RECOMMENDATIONS.

1 C9 ASPHALT PAVEMENT SECTION
SCALE: N.T.S.

* ALSO KNOWN AS STABILIZED SUBGRADE.

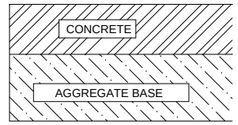

CONCRETE — 7-INCH THICK (DUMPSTER PAD), 6-INCH (DRIVE LANES & ENTRANCES/EXITS) CONCRETE 4,000 PSI AT 28 DAYS. REINFORCEMENT, JOINTING, AND SAWCUTTING PER AMERICAN CONCRETE INSTITUTE (ACI) OR FDOT STANDARDS

AGGREGATE BASE — 12-INCHES AGGREGATE BASE TO A MINIMUM 95% MAX DRY DENSITY PER MODIFIED PROCTOR TEST (AT LEAST ONE FOOT OF FREE-DRAINING MATERIAL SHOULD BE INCLUDED DIRECTLY BENEATH RIGID CONCRETE PAVEMENT. FILL MEETING THE REQUIREMENTS PRESENTED IN SECTION 4.2 (EARTHWORK) OF THE TERRACON GEOTECHNICAL REPORT MAY BE CONSIDERED FREE-DRAINING. LIMEROCK SHOULD NOT BE CONSIDERED FREE DRAINING FOR THIS PURPOSE.)

NOTES:
1. REFER TO GEOTECHNICAL REPORT BY TERRACON FOR PAVEMENT RECOMMENDATIONS.
2. REFER TO DETAIL SHEETS C11, C12, AND C13 FOR CONCRETE JOINT DETAILS.

2 C9 CONCRETE PAVEMENT SECTION (HEAVY-DUTY)
SCALE: N.T.S.

USES: DRIVE AISLES, APRONS, DUMPSTER PADS

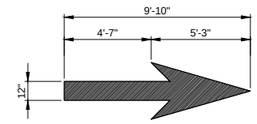

NOTE:
WHEN ARROW AND PAVEMENT MESSAGE ARE USED TOGETHER, THE ARROW SHALL BE LOCATED DOWN STREAM OF THE PAVEMENT MESSAGE AND SHALL BE SEPARATED FROM THE PAVEMENT MESSAGE BY A DISTANCE OF 25' (BASE OF ARROW TO THE BASE OF THE MESSAGE) IN ACCORDANCE WITH FDOT INDEX No 17346.

ALL MARKINGS SHALL BE THERMMOPLASTIC

3 C9 DIRECTIONAL ARROW
SCALE: N.T.S.

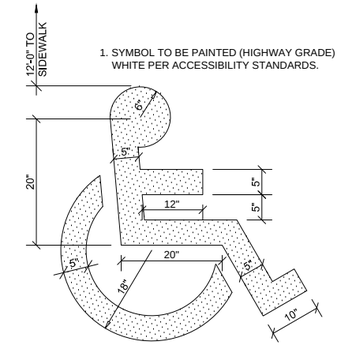

4 C9 HANDICAP PARKING PAVEMENT MARKING
SCALE: N.T.S.

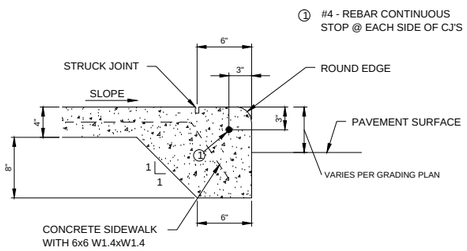

5 C9 INTEGRAL CURB AND SIDEWALK
SCALE: N.T.S.

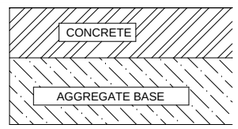

CONCRETE — 5-INCH THICK (AUTOMOBILE PARKING) CONCRETE 4,000 PSI AT 28 DAYS. REINFORCEMENT, JOINTING, AND SAWCUTTING PER AMERICAN CONCRETE INSTITUTE (ACI) OR FDOT STANDARDS

AGGREGATE BASE — 12-INCHES AGGREGATE BASE TO A MINIMUM 95% MAX DRY DENSITY PER MODIFIED PROCTOR TEST (AT LEAST ONE FOOT OF FREE-DRAINING MATERIAL SHOULD BE INCLUDED DIRECTLY BENEATH RIGID CONCRETE PAVEMENT. FILL MEETING THE REQUIREMENTS PRESENTED IN SECTION 4.2 (EARTHWORK) OF THE TERRACON GEOTECHNICAL REPORT MAY BE CONSIDERED FREE-DRAINING. LIMEROCK SHOULD NOT BE CONSIDERED FREE DRAINING FOR THIS PURPOSE.)

NOTES:
1. REFER TO GEOTECHNICAL REPORT BY TERRACON FOR PAVEMENT RECOMMENDATIONS.
2. REFER TO DETAIL SHEETS C11,C12, AND C13 FOR CONCRETE JOINT DETAILS.

6 C9 CONCRETE PAVEMENT SECTION (LIGHT-DUTY)
SCALE: N.T.S.

USES: PARKING SPACES (CAR ONLY TRAFFIC AREAS).
CONFIRM NO TRUCK TURNING MOVEMENTS W/ OWNER

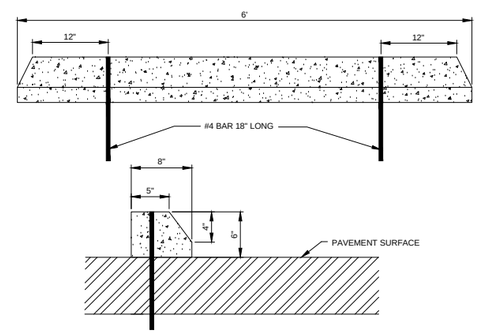

7 C9 PRECAST CONCRETE WHEEL STOP
SCALE: N.T.S.

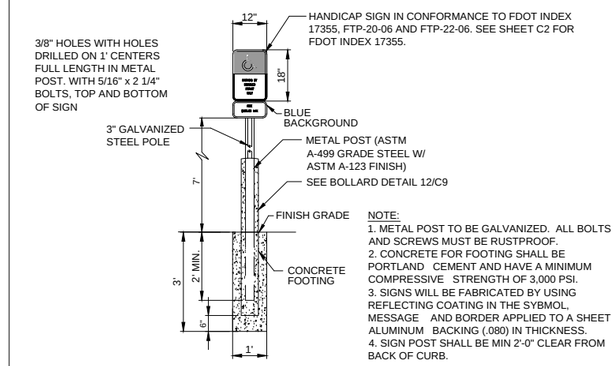

NOTE:
1. METAL POST TO BE GALVANIZED. ALL BOLTS AND SCREWS MUST BE RUSTPROOF.
2. CONCRETE FOR FOOTING SHALL BE PORTLAND CEMENT AND HAVE A MINIMUM COMPRESSIVE STRENGTH OF 3,000 PSI.
3. SIGNS WILL BE FABRICATED BY USING REFLECTING COATING IN THE SYBMOL, MESSAGE AND BORDER APPLIED TO A SHEET ALUMINUM BACKING (.080) IN THICKNESS.
4. SIGN POST SHALL BE MIN 2'-0" CLEAR FROM BACK OF CURB.

8 C9 HANDICAP PARKING SIGN
SCALE: N.T.S.

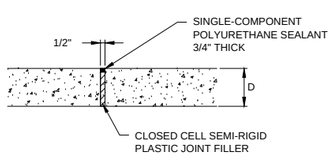

1/2" EXPANSION JOINT
NTS

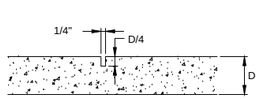

CONTROL JOINT
NTS

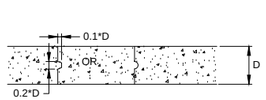

9 C9 CONSTRUCTION JOINT
SCALE: N.T.S.

PROVIDE TOOLED CONTROL JOINTS AT 6' O.C. (25% SLAB THICKNESS) AND ISOLATION JOINTS AT 24' O.C., UNLESS OTHERWISE NOTED.

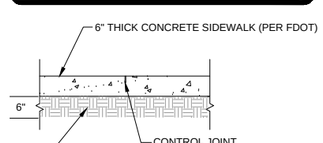

10 C9 SIDEWALK WITHIN FDOT RIGHT-OF-WAY
SCALE: N.T.S.

PROVIDE TOOLED CONTROL JOINTS AT 6' O.C. (25% SLAB THICKNESS) AND ISOLATION JOINTS AT 24' O.C., UNLESS OTHERWISE NOTED.

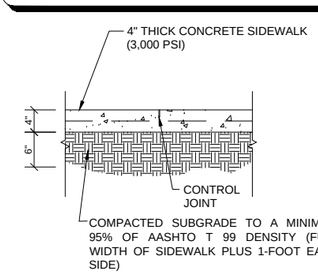

10 C9 TYPICAL SIDEWALK
SCALE: N.T.S.

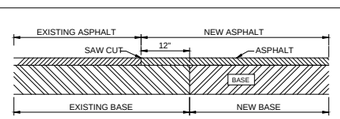

11 C9 PAVEMENT CONNECTION
SCALE: N.T.S.

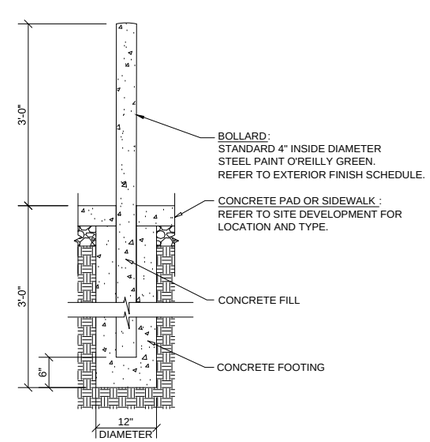

* NOTE: THE BOLLARDS INSTALLED INSIDE THE DUMPSTER ENCLOSURE WILL BE 6" DIAMETER, CONCRETE FILLED, AND 4' HIGH.

12 C9 STEEL BOLLARD
SCALE: N.T.S.

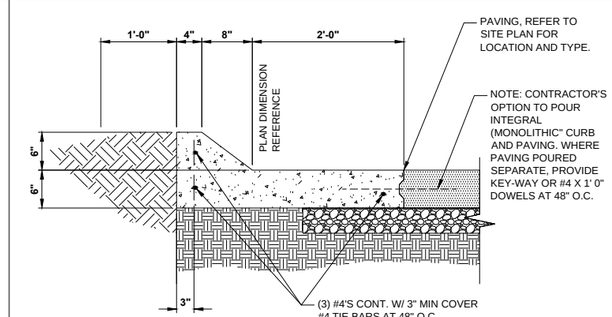

NOTE: PROVIDE CONTROL JOINTS AT 10' O.C.
(25% SLAB THICKNESS)

13 C9 CONCRETE CURB SECTION
SCALE: N.T.S.

SITE DEVELOPMENT DETAILS

THOMAS M. ROSE, PE
FL LICENSE NO. 62860

Cardno TBE
380 Park Place Blvd., Suite 300, Clearwater, Florida, 33759
www.cardnotbe.com - 727.531.3505
Certificate of Authorization No. 3843

CRAIG A. SCHNEIDER, AIA
ARCHITECT
1736 East Sunshine, Suite 417
Springfield, Missouri 65804
417.862.0558
Fax: 417.862.3265
e-mail: architect@estierlyschneider.com

New O'Reilly Auto Parts Store:
S.R. 52
HUDSON, FL
(HUDSON #2)

O'Reilly AUTO PARTS
233 SOUTH PATTERSON
SPRINGFIELD, MISSOURI 65802
417-862-2674 PHONE

COMM #	3539
DATE:	03-21-14
REVISION DATE:	05-06-14

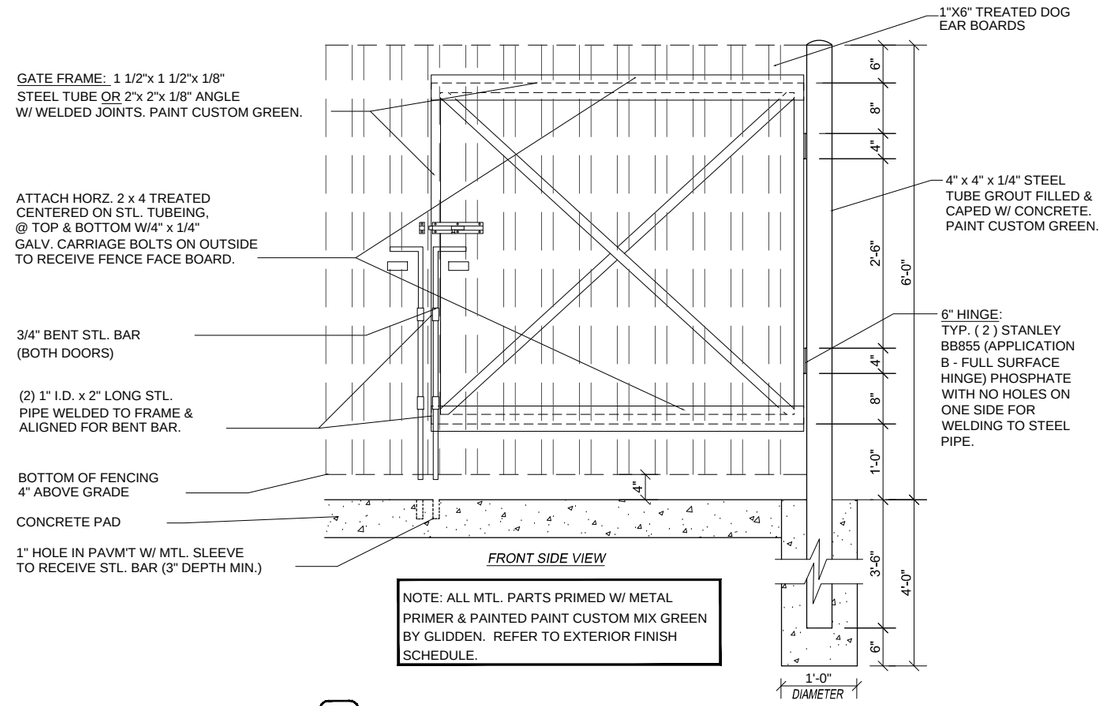

NOTE: ALL MTL. PARTS PRIMED W/ METAL PRIMER & PAINTED PAINT CUSTOM MIX GREEN BY GLIDDEN. REFER TO EXTERIOR FINISH SCHEDULE.

1 / C10 SCREEN FENCE DETAIL
SCALE: N.T.S.

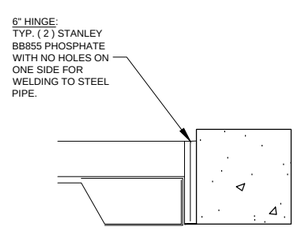

3 / C10 GATE DETAIL
SCALE: N.T.S.

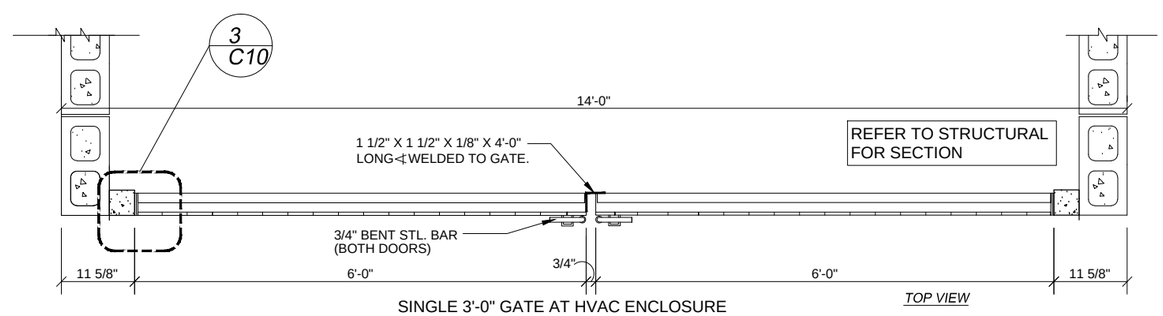

SINGLE 3'-0" GATE AT HVAC ENCLOSURE

2 / C10 DETAIL SECTION
SCALE: N.T.S.

CONSTRUCTION DETAILS 1

THOMAS M. ROSE, PE
FL LICENSE NO. 62860

Cardno TBE
380 Park Place Blvd., Suite 300, Clearwater, Florida, 33759
www.cardnotbe.com - 727.531.3505
Certificate of Authorization No. 3843

CRAIG A. SCHNEIDER, AIA
ARCHITECT
1736 East Sunshine, Suite 417
Springfield, Missouri 65804
417.862.0558
Fax: 417.862.3265
e-mail: architect@estertlyschneider.com

New O'Reilly Auto Parts Store:
S.R. 52
HUDSON, FL
(HUDSON #2)

O'Reilly AUTO PARTS
233 SOUTH PATTERSON
SPRINGFIELD, MISSOURI 65802
417-862-2674 PHONE

COMM #	3539
DATE:	03-21-14
REVISION DATE:	05-06-14

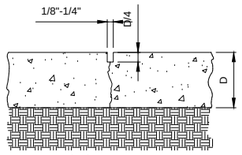

TYPE 'A' UNDOWELED CONTRACTION (CONTROL) JOINT

NTS

UNDOWELED TRANSVERSE CONTRACTION OR LONGITUDINAL JOINT, SAWED OR PRE-MOLDED. DO NOT DOWEL PAVEMENTS LESS THAN 7" THICK

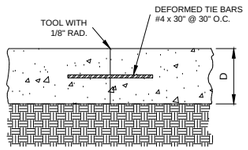

TYPE 'B' TIED JOINT

NTS

TIED LONGITUDINAL CONSTRUCTION OR CONTRACTION JOINT WHERE REQUIRED. NOTE: DO NOT TIE MORE THAN THREE LANES TOGETHER.

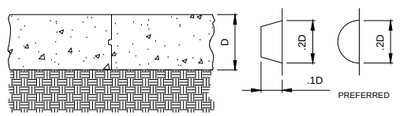

TYPE 'C' CONSTRUCTION JOINT

NTS

LONGITUDINAL KEYWAY CONSTRUCTION JOINT FOR PAVEMENT 6 INCHES OR GREATER. TYPE C-1 STRAIGHT BUTT TYPE JOINT USED FOR PAVEMENTS LESS THAN 6 INCHES.

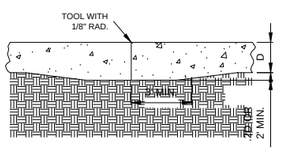

TYPE 'C–1' BUTT JOINT

NTS

IN LIEU OF THICKENING EDGES, OVERALL PAVEMENT THICKNESS MAY BE INCREASED AS FOLLOW: 6 INCHES OR LESS, ADD 0.5 INCH. MORE THAN 6 INCHES, ADD 1 INCH.

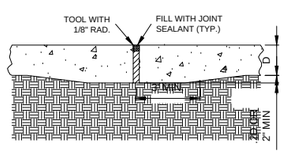

TYPE 'D' BUTT JOINT

NTS

ISOLATION JOINT FOR PAVEMENTS LESS THAN 8" THICK.

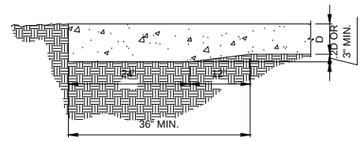

THICKENED EDGE

NTS

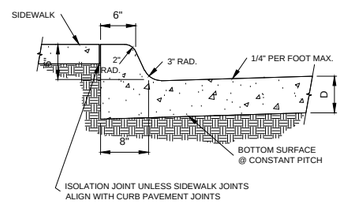

INTEGRAL CURB

NTS

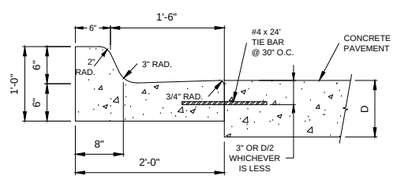

TIED CURB

NTS

TYPE F, FDOT CURB SHOWN, OTHER TYPE MAY BE USED WITH THE SAME TIE BAR CONFIGURATION.

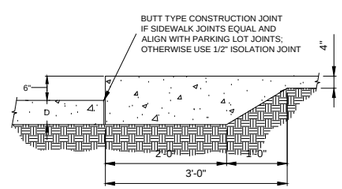

SIDEWALK/CURB

NTS

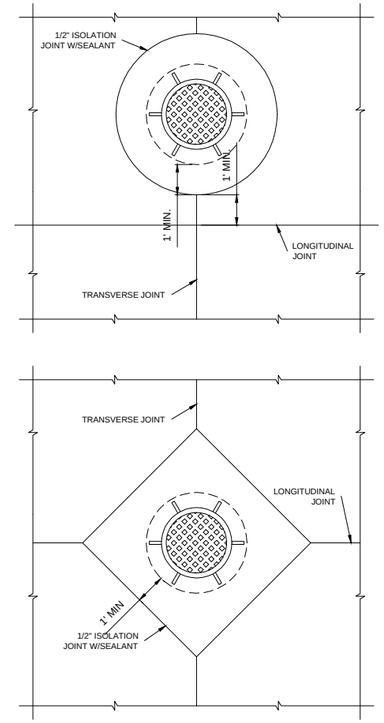

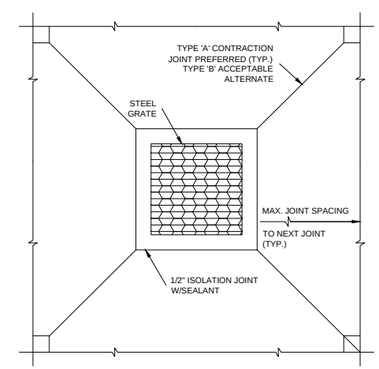

JOINTS AT MANHOLES

NTS

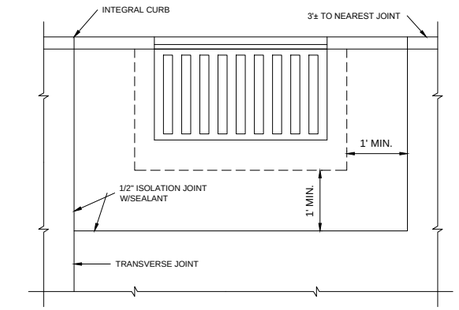

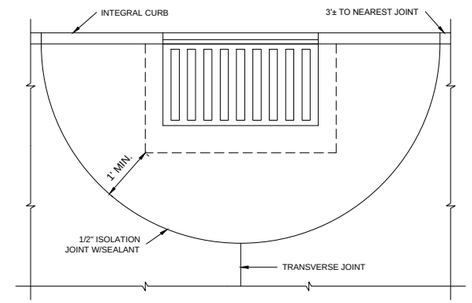

JOINTS AT INLETS

NTS

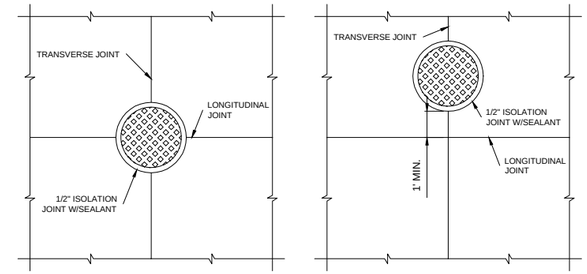

JOINTS AT MANHOLE

NTS

TYPE JOINT DETAILS

A DOWELED OR UNDOWELED
B TIED
C CONSTRUCTION WITH KEYWAY
C-1 BUTT
D ISOLATION
D-1 ISOLATION WITH DOWEL

* ALL DETAILS ARE TYPICAL - REFERENCE TECHNICAL SPECIFICATIONS, FDOT SPECS/INDEXS, AND DESIGN PLANS FOR MORE DETAIL SPECIFIC TO THIS PROJECT, UTILIZING MOST STRINGENT STANDARDS FOR BIDDING AND CONSTRUCTION. CONTRACTOR TO PROVIDE JOINT LAYOUT SHOP DRAWINGS FOR REVIEW AND APPROVAL BY THE OWNER, GEOTECHNICAL & ENGINEER PRIOR TO INSTALLATION.

CONCRETE JOINT DETAILS 1

THOMAS M. ROSE, PE
FL LICENSE NO. 62860

Cardno TBE
380 Park Place Blvd., Suite 300, Clearwater, Florida, 33759
www.cardnotbe.com - 727.531.3505
Certificate of Authorization No. 3843

CRAIG A. SCHNEIDER, AIA
ARCHITECT
1736 East Sunshine, Suite 417
Springfield, Missouri 65804
417.862.0558
Fax: 417.862.3265
e-mail: architect@estterlyschneider.com

New O'Reilly Auto Parts Store:
S.R. 52
HUDSON, FL
(HUDSON #2)

O'Reilly AUTO PARTS
233 SOUTH PATTERSON
SPRINGFIELD, MISSOURI 65802
417-862-2674 PHONE

COMM #	3539
DATE:	03-21-14
REVISION DATE:	05-06-14

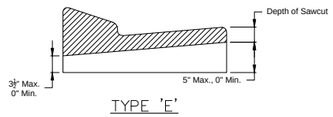

TYPE 'E'
CONCRETE CURB AND GUTTER
NTS

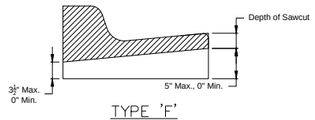

TYPE 'F'
CONCRETE CURB AND GUTTER
NTS

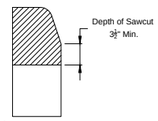

TYPE 'D' CONTRACTION
JOINT IN CURB
NTS

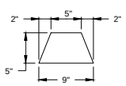

CONCRETE STOPPER/BUMPER
NTS

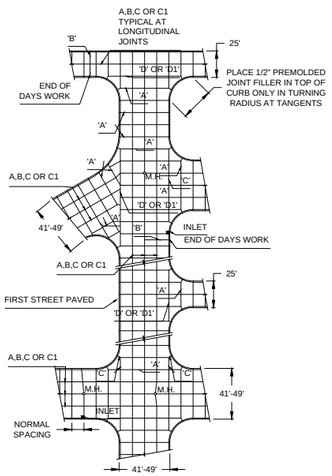

TYPICAL PAVEMENT JOINT PLAN
NTS

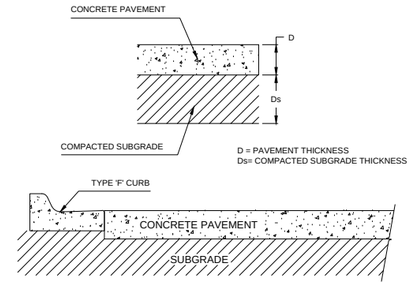

TYPICAL SECTIONS
NTS

RECOMMENDED MAX. JOINT SPACINGS

PAVEMENT THICKNESS (INCHES)	RECOMMENDED MAXIMUM JOINT SPACING (FEET)
3.5 (FOR WHITETOPPING ONLY)	6
4.0	10
4.5	10
5.0	12
5.5	12
6.0	15
OVER 6.0	15

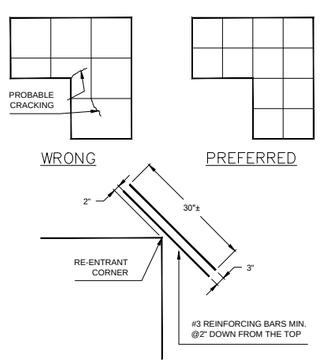

ACCEPTABLE ALTERNATE
NTS

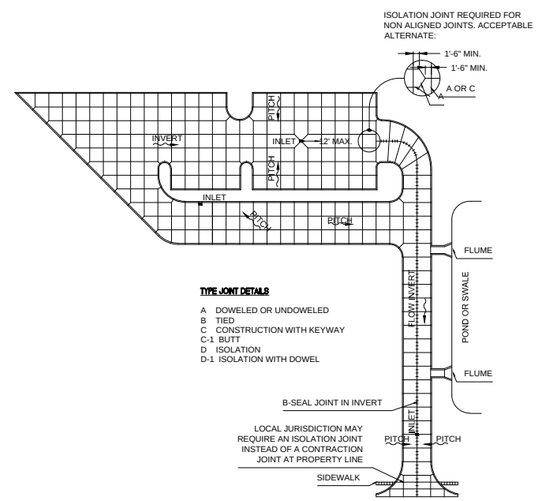

TYPICAL PARKING AREA JOINT LAYOUT
NTS

GENERAL NOTES:

1. USE ACI OR FC&PA CERTIFIED FLATWORK FINISHER
2. USE ACI 330R-01 GUIDE FOR DESIGN AND CONSTRUCTION OF CONCRETE PARKING LOTS
3. USE ACI 330.1-94 STANDARD SPECIFICATION FOR PLAIN CONCRETE PARKING LOTS
4. ALL CONCRETE USED IN PARKING LOT, UNLESS OTHERWISE INDICATED, SHALL HAVE A COMPRESSIVE STRENGTH OF 4,000 PSI AT 28 DAYS, UNLESS OTHERWISE NOTED.
5. PREPARE THE SUBGRADE IN ACCORDANCE WITH THE GEOTECHNICAL ENGINEER'S RECOMMENDATIONS FOR RIGID PAVEMENTS. SUBGRADE SOIL DENSITY TESTING MUST BE COMPLETED AND VERIFIED BY THE GEOTECHNICAL ENGINEER PRIOR TO CONCRETE PLACEMENT.
6. IMPORTED SOIL USE FOR BACK FILL SHOULD BE FREE OF HEAVY CLAY, SILTS, STONES, PLANT ROOT OR OTHER FOREIGN MATERIAL GREATER THAN 1 ½" IN DIAMETER IN ORDER TO ACHIEVE ADEQUATE COMPACTION AROUND ANY FIXED OBJECT IN GROUND. ALTERNATE WILL BE TO USE FLOWABLE FILL.
7. LAYOUT CONTROL JOINT BY STARTING WITH ANY DRAINAGE INLET WITHIN THE PAVEMENT SECTION AND WORK TOWARD EDGE OF PAVEMENT
8. KEEP ALL JOINTS CONTINUOUS
9. CONTROL JOINTS SHALL BE FORMED OR SAWED WITHIN 12 HOURS FROM TIME OF PLACEMENT;
   A. SIDEWALK-SPACING SHALL BE SAME AS WIDTH OF PAVEMENT AND LESS THAN 5 FEET IN LENGTH
   B. PAVEMENT-MAXIMUM SPACING SHALL BE 2.5 TIMES THICKNESS IN UNIT OF FEET AND LESS THAN 15 FEET IN LENGTH (E.G. T=4 INCH SPACING AT 10'x10')
10. CURE CONCRETE IMMEDIATELY AFTER FINISHING OPERATION IS COMPLETED BY USING ONE OF THE FOLLOWING METHODS: WATER, PIGMENTED WATER-BASED CURING COMPOUND OR VISQUEEN AND BURLAP
11. ALL DETAILS ARE TYPICAL - REFERENCE TECHNICAL SPECIFICATIONS, FDOT SPECS/INDEXS, AND DESIGN PLANS FOR MORE DETAIL SPECIFIC TO THIS PROJECT, UTILIZING MOST STRINGENT STANDARDS FOR BIDDING AND CONSTRUCTION. CONTRACTOR TO PROVIDE JOINT LAYOUT SHOP DRAWINGS FOR REVIEW AND APPROVAL BY THE OWNER, GEOTECHNICAL & ENGINEER PRIOR TO INSTALLATION.

CURBS:

1. ALL CURBING SHALL BE CONSTRUCTED OF CONCRETE THAT WILL OBTAIN A MINIMUM COMPRESSIVE STRENGTH OF 3,000 PSI AT 28 DAYS, UNLESS OTHERWISE NOTED.
2. ALL CONCRETE CURBS SHALL BE SPACED WITH A FULL-DEPTH, ½" WIDTH ISOLATION JOINT MATERIAL PRIOR TO PLACEMENT OF ADJACENT CONCRETE PAVEMENT
3. THERE SHALL BE CONTROL JOINTS, EITHER TOOL OR SAW-CUT, MATCH PAVEMENT JOINTS, UNLESS OTHERWISE SPECIFIED; JOINTS SHALL BE FORMED WITHIN 12 HOURS OF PLACEMENT
4. ALL CURB ENDS THAT DO NOT TIE INTO OTHER FACILITIES SHALL TRANSITION DOWN TO PAVEMENT GRADE IN 24 INCHES
5. CONSTRUCTION JOINT SHALL BE TIED WITH A No.4 TIE BAR EXTENDED 6 INCHES INTO EACH CURB SECTION AND SHALL BE SPACED WITH A FULL-DEPTH ½" WIDTH ISOLATION JOINT MATERIAL

* ALL DETAILS ARE TYPICAL - REFERENCE TECHNICAL SPECIFICATIONS, FDOT SPECS/INDEXS, AND DESIGN PLANS FOR MORE DETAIL SPECIFIC TO THIS PROJECT, UTILIZING MOST STRINGENT STANDARDS FOR BIDDING AND CONSTRUCTION. CONTRACTOR TO PROVIDE JOINT LAYOUT SHOP DRAWINGS FOR REVIEW AND APPROVAL BY THE OWNER, GEOTECHNICAL & ENGINEER PRIOR TO INSTALLATION.

CONCRETE JOINT DETAILS 2

THOMAS M. ROSE, PE
FL LICENSE NO. 62860

Cardno TBE
380 Park Place Blvd., Suite 300, Clearwater, Florida, 33759
www.cardnotbe.com - 727.531.3505
Certificate of Authorization No. 3843

CRAIG A. SCHNEIDER, AIA
ARCHITECT
1736 East Sunshine, Suite 417
Springfield, Missouri 65804
417.862.0558
Fax: 417.862.3265
e-mail: architect@estierlyschneider.com

New O'Reilly Auto Parts Store:
S.R. 52
HUDSON, FL
(HUDSON #2)

O'Reilly AUTO PARTS
233 SOUTH PATTERSON
SPRINGFIELD, MISSOURI 65802
417-862-2674 PHONE

COMM #	3539
DATE:	03-21-14
REVISION DATE:	05-06-14

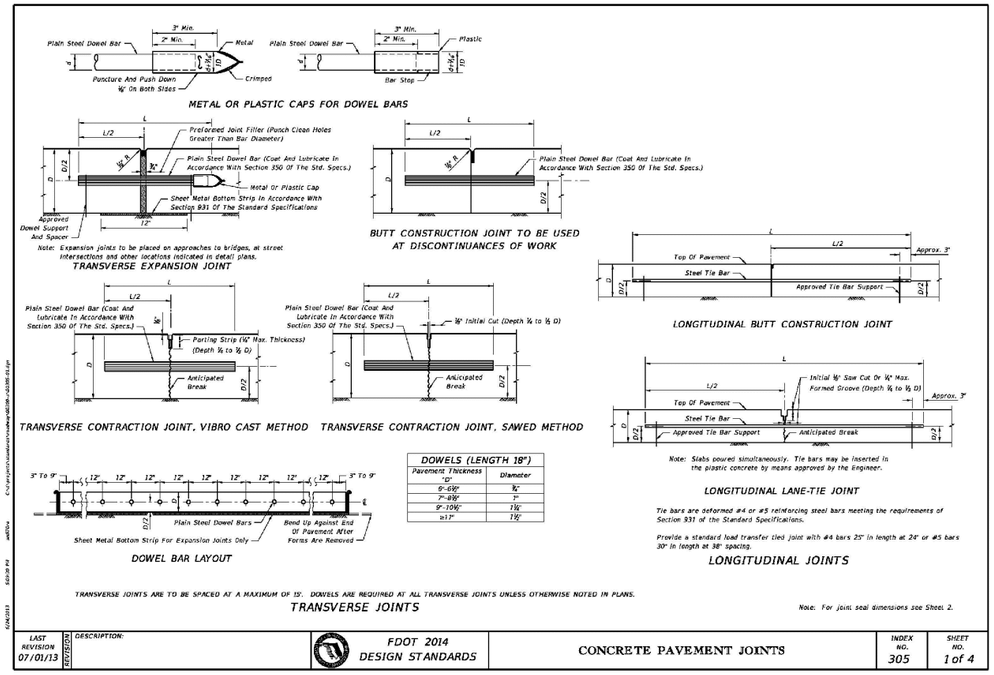

DOWELS (LENGTH 18")	
Pavement Thickness "D"	Diameter
6"-6½"	¾"
7"-8½"	1"
9"-10½"	1¼"
≥11"	1½"

1 C13 CONCRETE PAVEMENT JOINTS
SCALE: N.T.S.

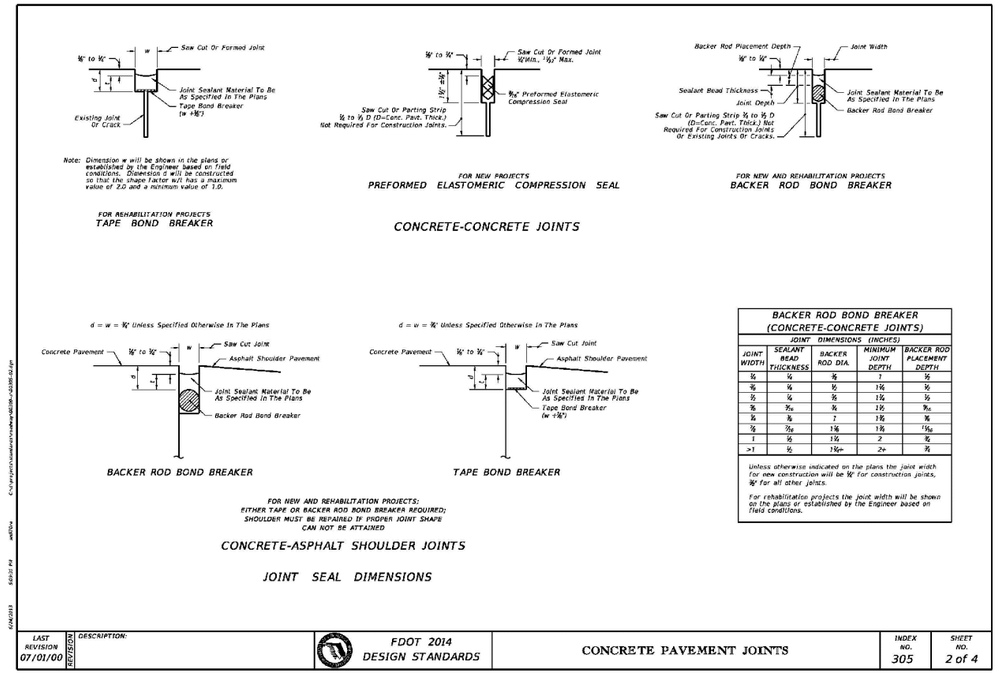

BACKER ROD BOND BREAKER (CONCRETE-CONCRETE JOINTS)				
JOINT DIMENSIONS (INCHES)				
JOINT WIDTH	SEALANT BEAD THICKNESS	BACKER ROD DIA.	MINIMUM JOINT DEPTH	BACKER ROD PLACEMENT DEPTH
⅛	¼	⅛	1	½
¼	¼	¼	1⅛	½
½	¼	½	1½	½
¾	3/16	¾	1½	9/16
⅞	⅜	1	1½	⅝
⅞	7/16	1⅛	1½	11/16
1	½	1¼	2	¾
>1	½	1¼+	2+	⅞

Unless otherwise indicated on the plans the joint width for new construction will be ¼" for construction joints, ⅛" for all other joints.

For rehabilitation projects the joint width will be shown on the plans or established by the Engineer based on field conditions.

2 C13 CONCRETE PAVEMENT JOINTS
SCALE: N.T.S.

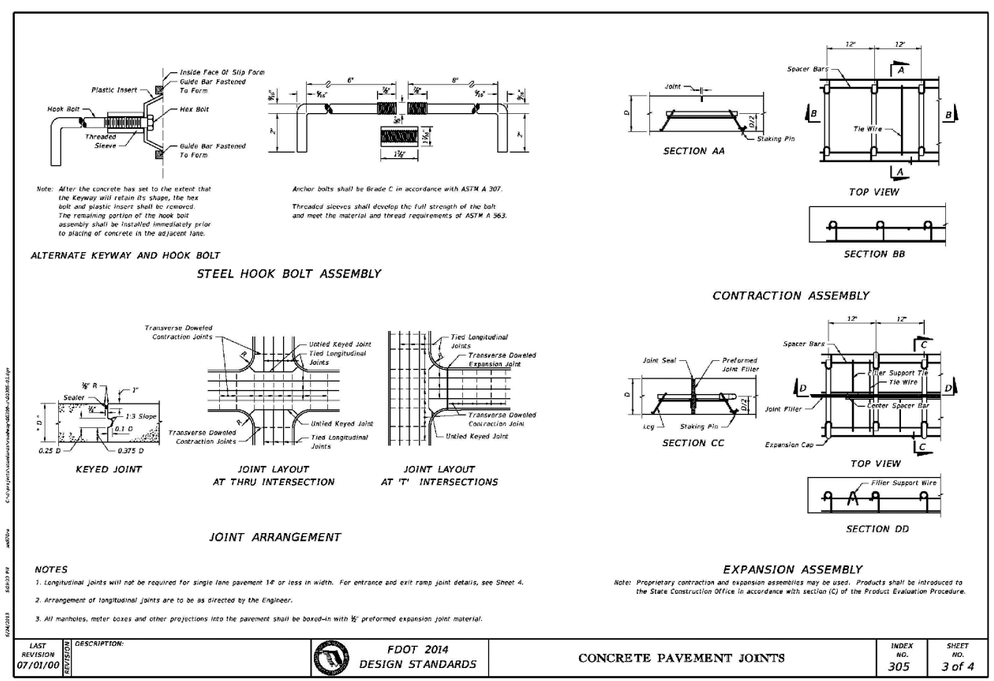

3 C13 CONCRETE PAVEMENT JOINTS
SCALE: N.T.S.

CONCRETE PAVEMENT JOINTS

THOMAS M. ROSE, PE
FL LICENSE NO. 62860

Cardno TBE
380 Park Place Blvd., Suite 300, Clearwater, Florida, 33759
www.cardnotbe.com - 727.531.3505
Certificate of Authorization No. 3843

CRAIG A. SCHNEIDER, AIA
ARCHITECT
1736 East Sunshine, Suite 417
Springfield, Missouri 65804
417.862.0558
Fax: 417.862.3265
e-mail: architect@estersbyschneider.com

New O'Reilly Auto Parts Store:
S.R. 52
HUDSON, FL
(HUDSON #2)

O'Reilly AUTO PARTS
233 SOUTH PATTERSON
SPRINGFIELD, MISSOURI 65802
417-862-2674 PHONE

COMM #	3539
DATE:	03-21-14
REVISION DATE:	05-06-14

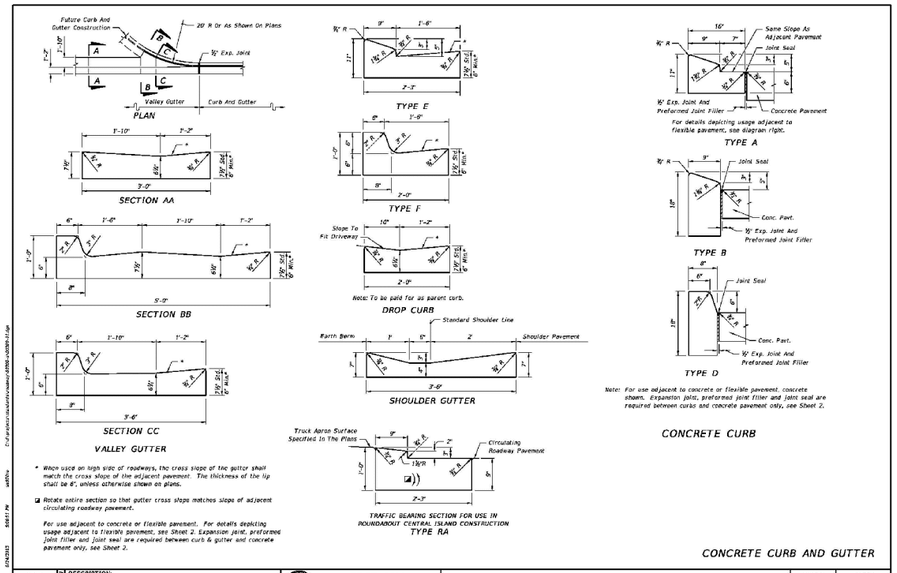

LAST REVISION	REVISION	DESCRIPTION:			INDEX NO.	SHEET NO.
07/01/00			FDOT 2014 DESIGN STANDARDS	CURB & CURB AND GUTTER	300	1 of 2

1 CONCRETE CURB DETAILS

C14 SCALE: N.T.S.

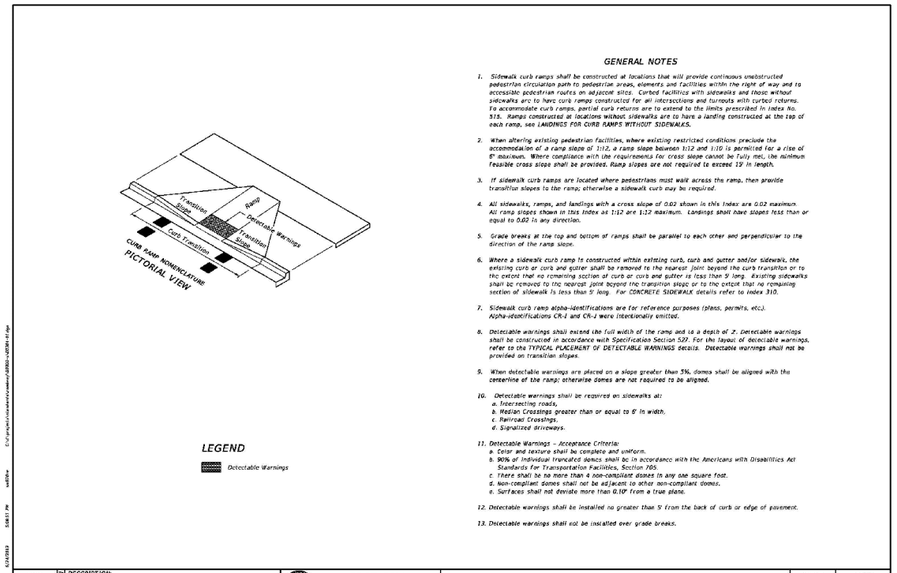

GENERAL NOTES

1. Sidewalk curb ramps shall be constructed at locations that will provide continuous unobstructed pedestrian circulation path to pedestrian areas, elements and facilities within the right of way and to accessible pedestrian routes on adjacent sites. Curbed facilities with sidewalks and those without sidewalks are to have curb ramps constructed for all intersections and turnouts with curbed returns. To accommodate curb ramps, partial curb returns are to extend to the limits prescribed in Index No. 515. Ramps constructed at locations without sidewalks are to have a landing constructed at the top of each ramp, see LANDINGS FOR CURB RAMPS WITHOUT SIDEWALKS.
2. When altering existing pedestrian facilities, where existing restricted conditions preclude the accommodation of a ramp slope of 1:12, a ramp slope between 1:12 and 1:10 is permitted for a rise of 6" maximum. Where compliance with the requirements for cross slope cannot be fully met, the minimum feasible cross slope shall be provided. Ramp slopes are not required to exceed 1:8 in length.
3. If sidewalk curb ramps are located where pedestrians must walk across the ramp, then provide transition slopes to the ramp; otherwise a sidewalk curb may be required.
4. All sidewalks, ramps, and landings with a cross slope of 0.02 shown in this Index are 0.02 maximum. All ramp slopes shown in this Index as 1:12 are 1:12 maximum. Landings shall have slopes less than or equal to 0.02 in any direction.
5. Grade breaks at the top and bottom of ramps shall be parallel to each other and perpendicular to the direction of the ramp slope.
6. Where a sidewalk curb ramp is constructed within existing curb, curb and gutter and/or sidewalk, the existing curb or curb and gutter shall be removed to the nearest joint beyond the curb transition or to the extent that no remaining section of curb or curb and gutter is less than 9' long. Existing sidewalks shall be removed to the nearest joint beyond the transition slope or to the extent that no remaining section of sidewalk is less than 9' long. For CONCRETE SIDEWALK details refer to Index 310.
7. Sidewalk curb ramp alpha-identifications are for reference purposes (plans, permits, etc.). Alpha-identifications CR-I and CR-J were intentionally omitted.
8. Detectable warnings shall extend the full width of the ramp and to a depth of 2'. Detectable warnings shall be constructed in accordance with Specification Section 527. For the layout of detectable warnings, refer to the TYPICAL PLACEMENT OF DETECTABLE WARNINGS details. Detectable warnings shall not be provided on transition slopes.
9. When detectable warnings are placed on a slope greater than 5%, domes shall be aligned with the centerline of the ramp; otherwise domes are not required to be aligned.
10. Detectable warnings shall be required on sidewalks at:
    a. Intersecting roads,
    b. Median Crossings greater than or equal to 6' in width,
    c. Railroad Crossings,
    d. Signalized driveways.
11. Detectable Warnings - Acceptance Criteria:
    a. Color and texture shall be complete and uniform.
    b. 90% of individual truncated domes shall be in accordance with the Americans with Disabilities Act Standards for Transportation Facilities, Section 705.
    c. There shall be no more than 4 non-compliant domes in any one square foot.
    d. Non-compliant domes shall not be adjacent to other non-compliant domes.
    e. Surfaces shall not deviate more than 0.10" from a true plane.
12. Detectable warnings shall be installed no greater than 5' from the back of curb or edge of pavement.
13. Detectable warnings shall not be installed over grade breaks.

LAST REVISION	REVISION	DESCRIPTION:			INDEX NO.	SHEET NO.
07/01/13			FDOT 2014 DESIGN STANDARDS	DETECTABLE WARNINGS AND SIDEWALK CURB RAMPS	304	1 of 7

2 CURB RAMP DETAILS

C14 SCALE: N.T.S.

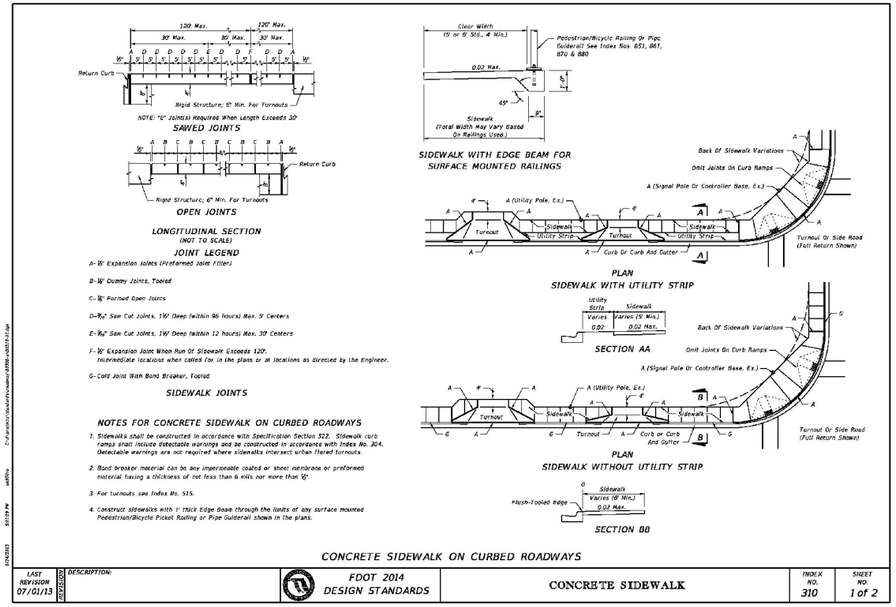

LAST REVISION	REVISION	DESCRIPTION:			INDEX NO.	SHEET NO.
07/01/13			FDOT 2014 DESIGN STANDARDS	CONCRETE SIDEWALK	310	1 of 2

3 CONCRETE SIDEWALK

C14 SCALE: N.T.S.

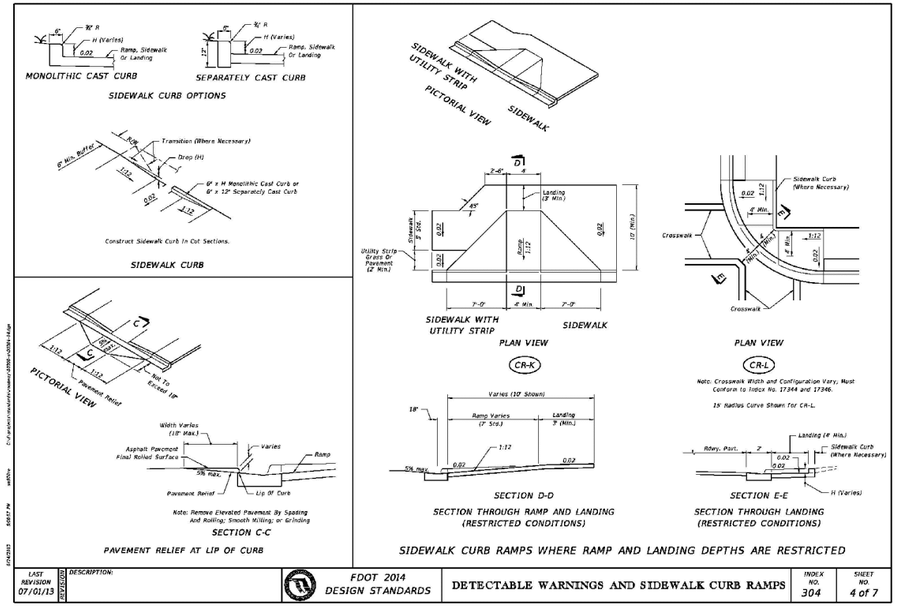

LAST REVISION	REVISION	DESCRIPTION:			INDEX NO.	SHEET NO.
07/01/13			FDOT 2014 DESIGN STANDARDS	DETECTABLE WARNINGS AND SIDEWALK CURB RAMPS	304	4 of 7

4 CURB RAMP DETAILS

C14 SCALE: N.T.S.

FDOT DETAILS 1

THOMAS M. ROSE, PE
FL LICENSE NO. 62860

Cardno TBE
380 Park Place Blvd., Suite 300, Clearwater, Florida, 33759
www.cardnotbe.com - 727.531.3505
Certificate of Authorization No. 3843

CRAIG A. SCHNEIDER, AIA
ARCHITECT
1736 East Sunshine, Suite 417
Springfield, Missouri 65804
417.862.0558
Fax: 417.862.3265
e-mail: architect@estierlyschneider.com

New O'Reilly Auto Parts Store:
S.R. 52
HUDSON, FL
(HUDSON #2)

O'Reilly AUTO PARTS
233 SOUTH PATTERSON
SPRINGFIELD, MISSOURI 65802
417-862-2674 PHONE

COMM #	3539
DATE:	03-21-14
REVISION DATE:	05-06-14

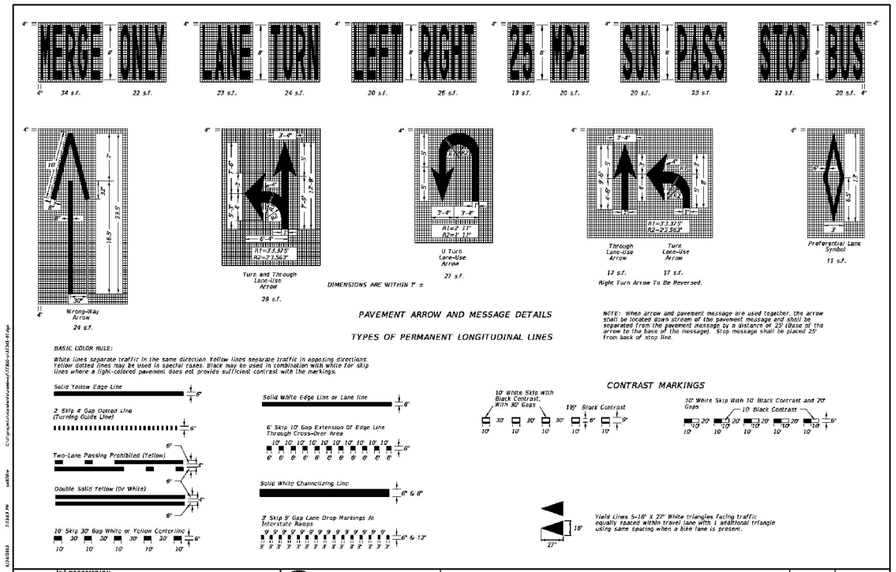

1 SPECIAL PAVEMENT MARKINGS

C15 SCALE: N.T.S.

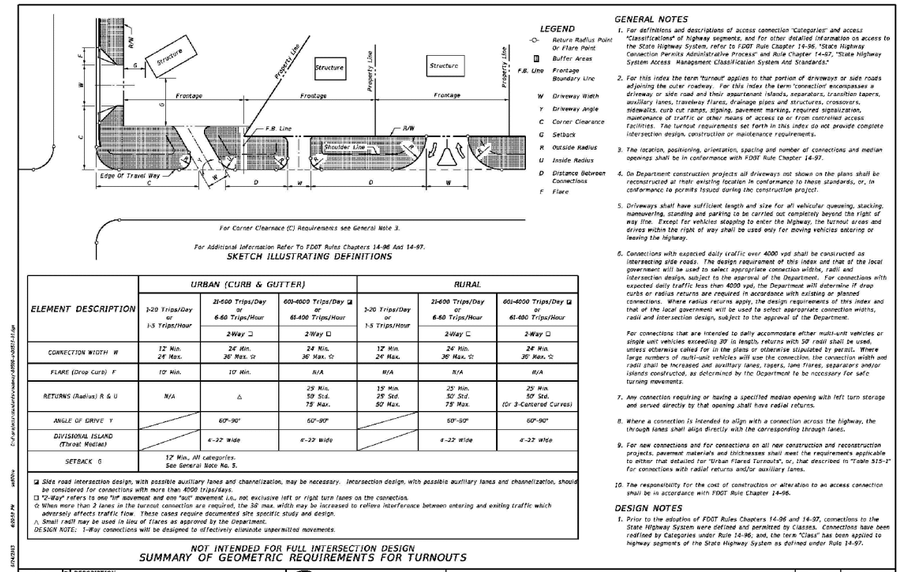

2 TURNOUT DETAILS

C15 SCALE: N.T.S.

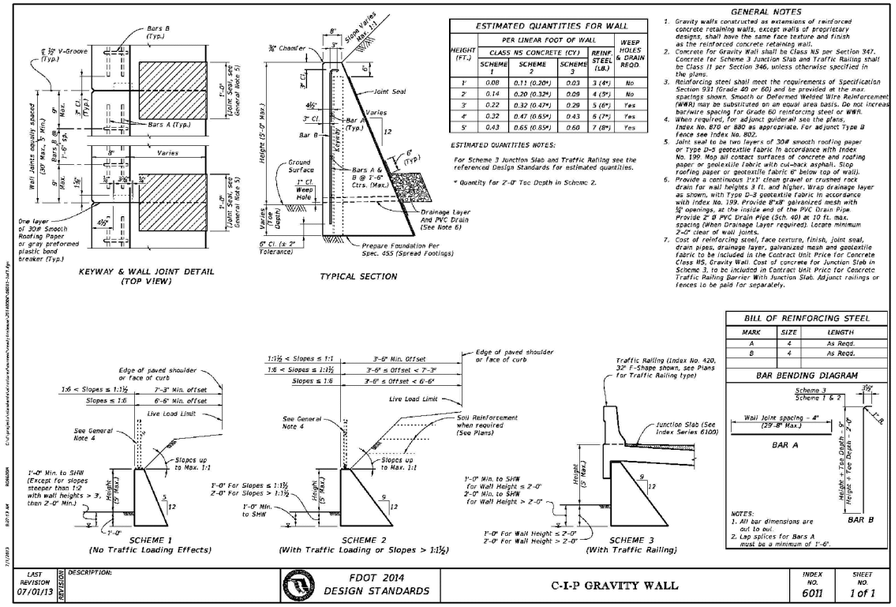

3 GRAVITY WALL DETAILS

C15 SCALE: N.T.S.

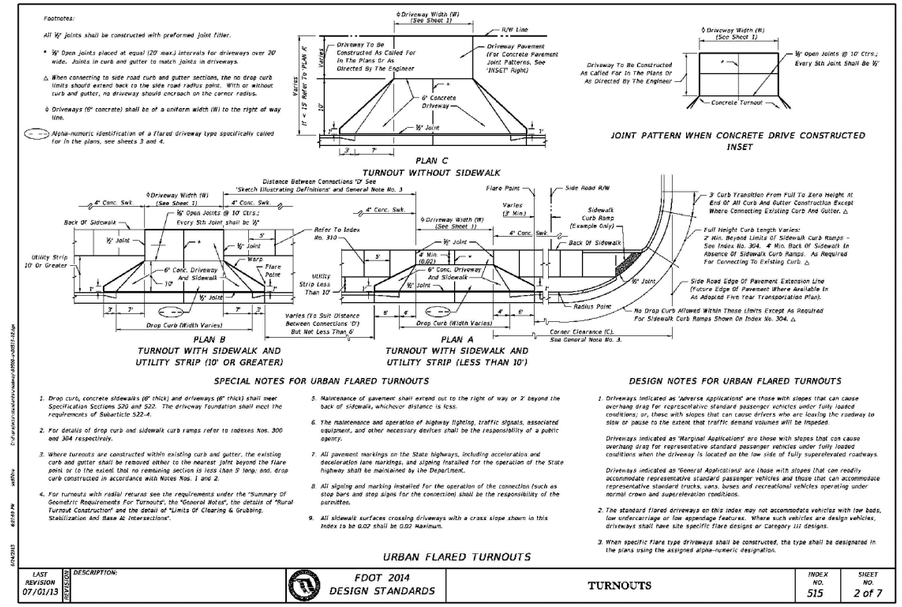

4 TURNOUT DETAILS

C15 SCALE: N.T.S.

FDOT DETAILS 2

THOMAS M. ROSE, PE
FL LICENSE NO. 62860

Cardno TBE
380 Park Place Blvd., Suite 300, Clearwater, Florida, 33759
www.cardnotbe.com - 727.531.3505
Certificate of Authorization No. 3843

New O'Reilly Auto Parts Store:
S.R. 52
HUDSON, FL
(HUDSON #2)

CRAIG A. SCHNEIDER, AIA
ARCHITECT
1736 East Sunshine, Suite 417
Springfield, Missouri 65804
417.862.0558
Fax: 417.862.3265
e-mail: architect@esterlyschneider.com

O'Reilly AUTO PARTS
233 SOUTH PATTERSON
SPRINGFIELD, MISSOURI 65802
417-862-2674 PHONE

COMM #	3530
DATE:	03-21-14
REVISION DATE:	05-06-14

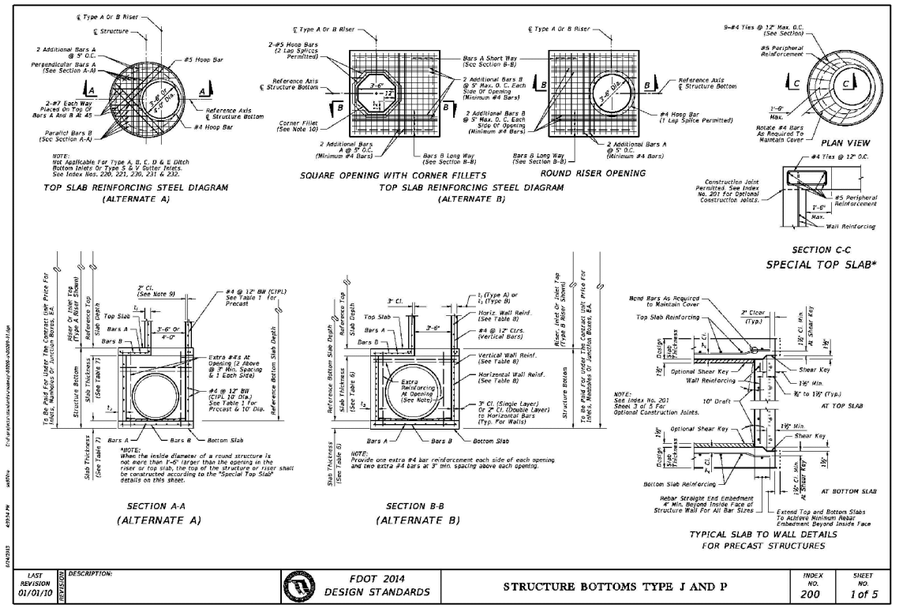

1 DRAINAGE DETAILS
C16 SCALE: N.T.S.

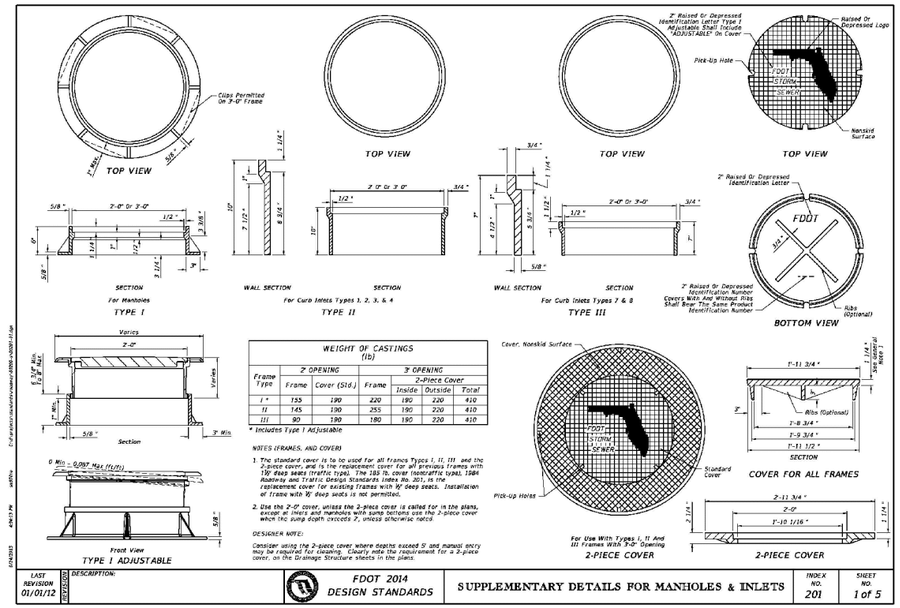

2 DRAINAGE DETAILS
C16 SCALE: N.T.S.

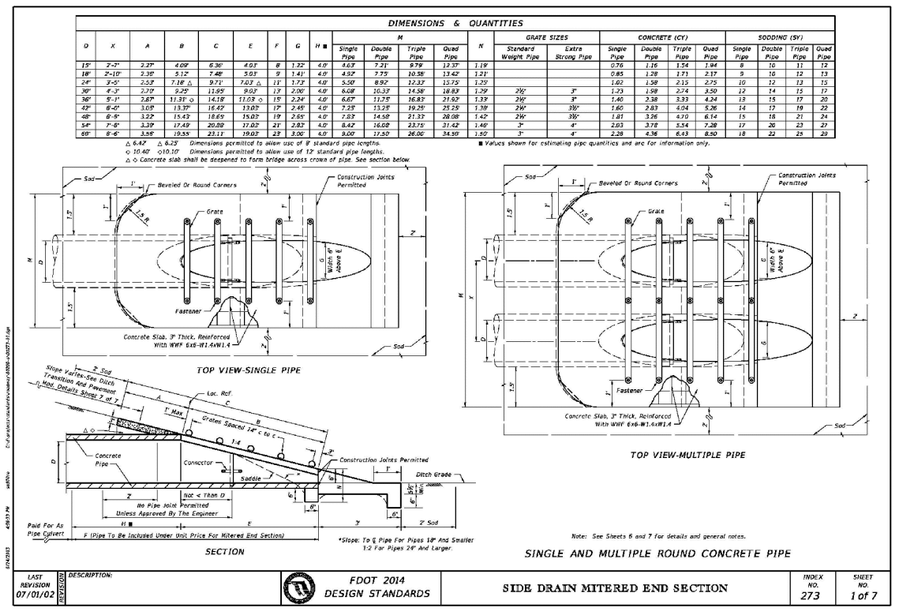

3 MITERED END DETAIL
C16 SCALE: N.T.S.

DRAINAGE DETAILS 1

THOMAS M. ROSE, PE
FL LICENSE NO. 62860

Cardno TBE
380 Park Place Blvd., Suite 300, Clearwater, Florida, 33759
www.cardnotbe.com - 727.531.3505
Certificate of Authorization No. 3843

New O'Reilly Auto Parts Store:
S.R. 52
HUDSON, FL
(HUDSON #2)

CRAIG A. SCHNEIDER, AIA
ARCHITECT
1736 East Sunshine, Suite 417
Springfield, Missouri 65804
417.862.0558
Fax: 417.862.3265
e-mail: architect@estterlyschneider.com

O'Reilly AUTO PARTS
233 SOUTH PATTERSON
SPRINGFIELD, MISSOURI 65802
417-862-2674 PHONE

COMM #	3539
DATE:	03-21-14
REVISION DATE:	05-06-14

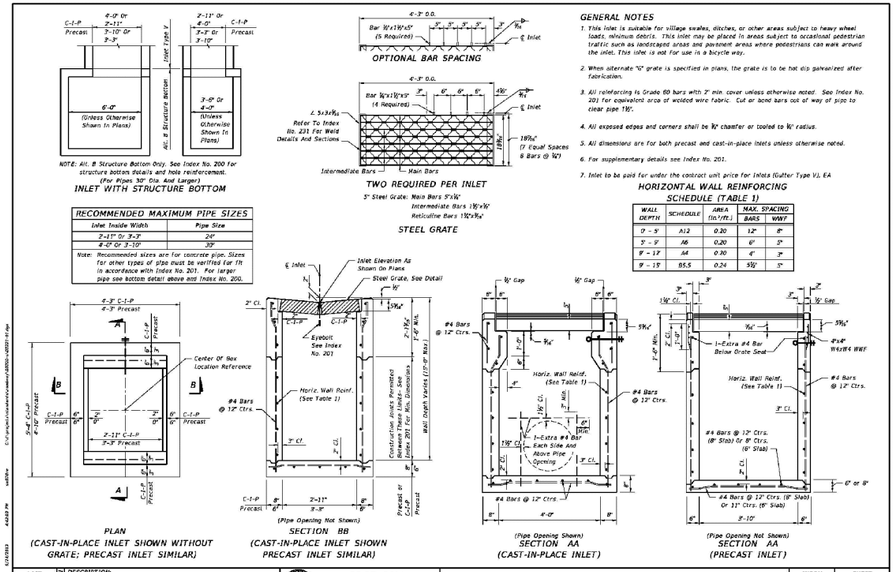

GENERAL NOTES

1. This inlet is suitable for village swales, ditches, or other areas subject to heavy wheel loads, minimum debris. This inlet may be placed in areas subject to occasional pedestrian traffic such as landscaped areas and pavement areas where pedestrians can walk around the inlet. This inlet is not for use in a bicycle way.
2. When alternate "G" grate is specified in plans, the grate is to be hot dip galvanized after fabrication.
3. All reinforcing is Grade 60 bars with 2" min. cover unless otherwise noted. See Index No. 201 for galvanized area of welded wire fabric. Cut or bend bars out of way of pipe to clear pipe 1½".
4. All exposed edges and corners shall be ⅛" chamfer or tooled to ⅛" radius.
5. All dimensions are for both precast and cast-in-place inlets unless otherwise noted.
6. For supplementary details see Index No. 201.
7. Inlet to be paid for under the contract unit price for Inlets (Gutter Type V), EA.

HORIZONTAL WALL REINFORCING SCHEDULE (TABLE 1)

WALL DEPTH	SCHEDULE	AREA (in²/ft.)	MAX. SPACING BARS	MAX. SPACING WWF
7' - 9'	A12	0.20	12"	8"
7' - 9'	A6	0.20	6"	3"
9' - 17'	A4	0.30	4"	3"
9' - 19'	B5.5	0.24	5½"	3"

RECOMMENDED MAXIMUM PIPE SIZES

Inlet Inside Width	Pipe Size
2'-11" Or 3'-3"	24"
4'-0" Or 3'-10"	30"

Note: Recommended sizes are for concrete pipe. Sizes for other types of pipe must be verified for fit in accordance with Index No. 201. For larger pipe see bottom detail above and Index No. 200.

LAST REVISION	DESCRIPTION:			INDEX NO.	SHEET NO
07/01/13		FDOT 2014 DESIGN STANDARDS	GUTTER INLET TYPE V	221	1 of 2

1 GUTTER INLET DETAILS

C17 SCALE: N.T.S.

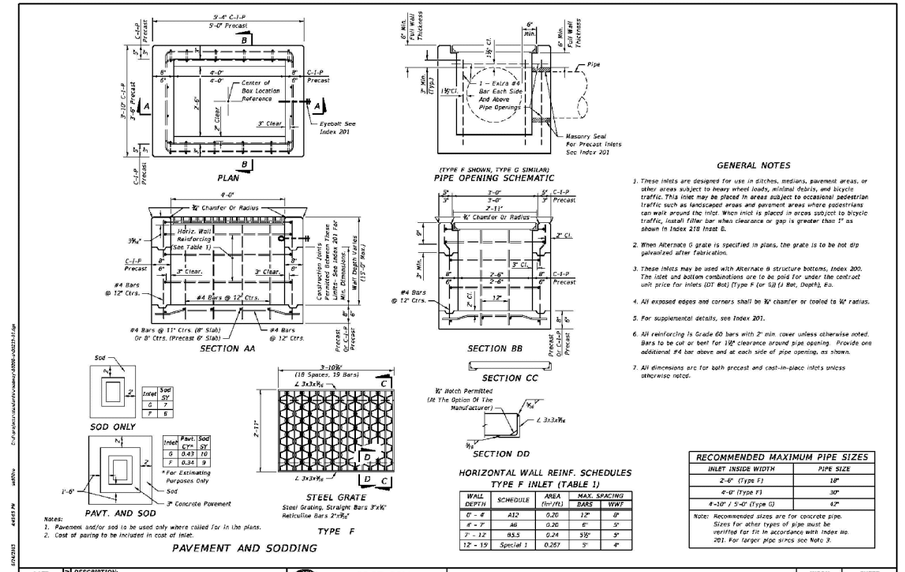

GENERAL NOTES

1. These inlets are designed for use in ditches, medians, pavement areas, or other areas subject to heavy wheel loads, minimal debris, and bicycle traffic. This inlet may be placed in areas subject to occasional pedestrian traffic such as landscaped areas and pavement areas where pedestrians can walk around the inlet. When inlet is placed in areas subject to bicycle traffic, install filler bar when clearance or gap is greater than 1" as shown in Index 218 Inset B.
2. When Alternate G grate is specified in plans, the grate is to be hot dip galvanized after fabrication.
3. These inlets may be used with Alternate B structure bottoms, Index 200. The inlet and bottom combinations are to be paid for under the contract unit price for inlets (DT Bot) (Type F for Sp (± Ref. Depth), EA.
4. All exposed edges and corners shall be ⅛" chamfer or tooled to ⅛" radius.
5. For supplemental details, see Index 201.
6. All reinforcing is Grade 60 bars with 2" min. cover unless otherwise noted. Bars to be cut or bent for 1½" clearance around pipe opening. Provide one additional #4 bar above and at each side of pipe opening, as shown.
7. All dimensions are for both precast and cast-in-place inlets unless otherwise noted.

HORIZONTAL WALL REINF. SCHEDULES TYPE F INLET (TABLE 1)

WALL DEPTH	SCHEDULE	AREA (in²/ft)	MAX. SPACING BARS	MAX. SPACING WWF
0' - 4'	A12	0.20	12"	8"
4' - 7'	A6	0.20	6"	3"
7' - 12	B5.5	0.24	5½"	3"
12' - 19	Special 1	0.267	5"	4"

RECOMMENDED MAXIMUM PIPE SIZES

INLET INSIDE WIDTH	PIPE SIZE
2'-4" (Type F)	18"
4'-0" (Type F)	30"
4'-10" / 5'-4" (Type G)	42"

Note: Recommended sizes are for concrete pipe. Sizes for other types of pipe must be verified for fit in accordance with Index No. 201. For larger pipe sizes see Note 3.

LAST REVISION	DESCRIPTION:			INDEX NO.	SHEET NO
01/01/10		FDOT 2014 DESIGN STANDARDS	DITCH BOTTOM INLET TYPES F AND G	233	1 of 2

2 DBI TYPE F INLET DETAILS

C17 SCALE: N.T.S.

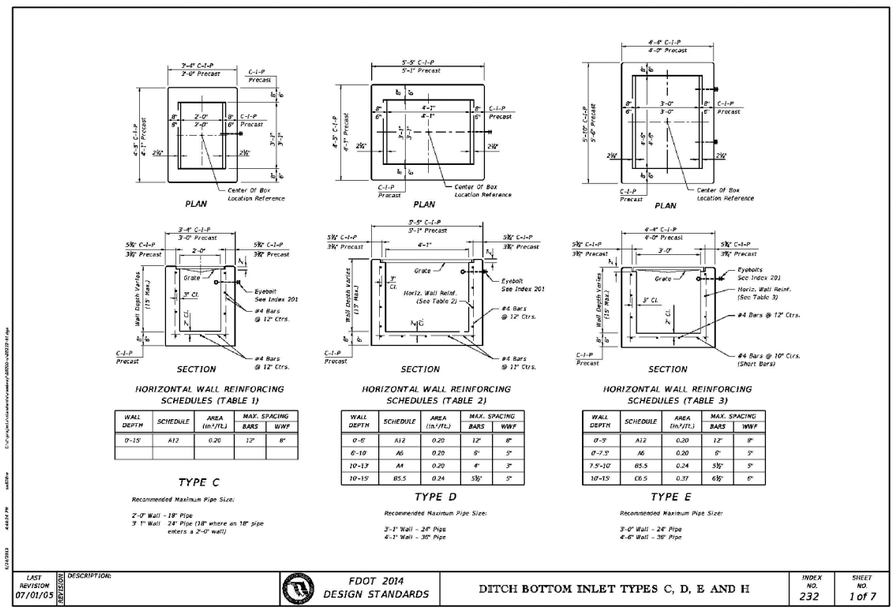

LAST REVISION	DESCRIPTION:			INDEX NO.	SHEET NO
07/01/05		FDOT 2014 DESIGN STANDARDS	DITCH BOTTOM INLET TYPES C, D, E AND H	232	1 of 7

3 DBI TYPE C, D, AND E INLET DETAILS

C17 SCALE: N.T.S.

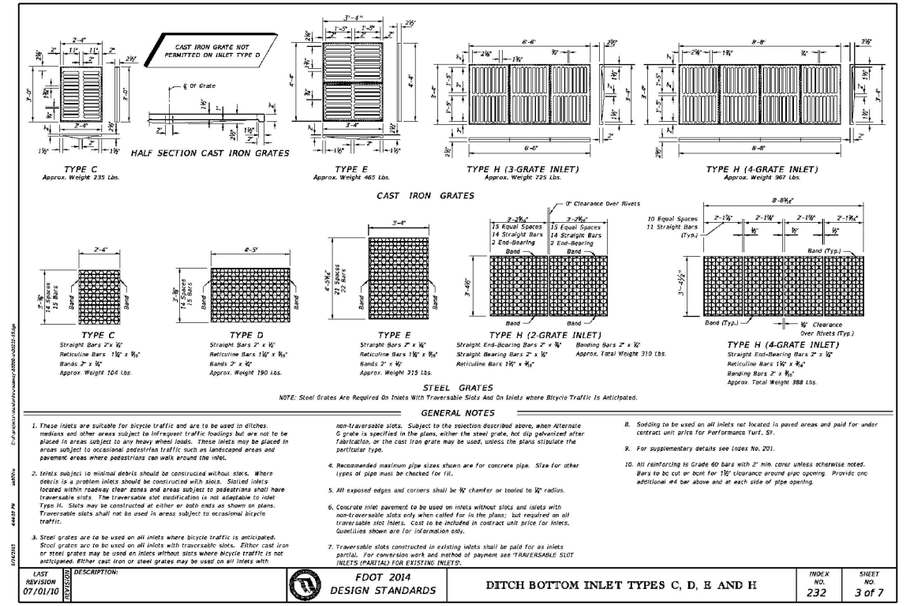

GENERAL NOTES

1. These inlets are suitable for bicycle traffic and are to be used in ditches, medians and other areas subject to infrequent traffic loadings but are not to be placed in areas subject to any heavy wheel loads. These inlets may be placed in areas subject to occasional pedestrian traffic such as landscaped areas and pavement areas where pedestrians can walk around the inlet.
2. Inlets subject to minimal debris should be constructed without slots. Where debris is a problem inlets should be constructed with slots. Slotted inlets located within roadway clear zones and areas subject to pedestrians shall have traversable slots. The traversable slot modification is not adaptable to inlet Type H. Slots may be constructed at either or both ends as shown on plans. Traversable slots shall not be used in areas subject to occasional bicycle traffic.
3. Steel grates are to be used on all inlets where bicycle traffic is anticipated. Steel grates are to be used on all inlets with traversable slots. Either cast iron or steel grates may be used on inlets without slots where bicycle traffic is not anticipated. Either cast iron or steel grates may be used on all inlets with non-traversable slots. Subject to the selection described above, when Alternate G grate is specified in the plans, either the steel grate, hot dip galvanized after fabrication, or the cast iron grate may be used, unless the plans stipulate the particular type.
4. Recommended maximum pipe sizes shown are for concrete pipe. Size for other types of pipe must be checked for fit.
5. All exposed edges and corners shall be ⅛" chamfer or tooled to ⅛" radius.
6. Concrete inlet pavement to be used on inlets without slots and inlets with non-traversable slots only when called for in the plans; but required on all traversable slot inlets. Cost to be included in contract unit price for inlets. Quantities shown are for information only.
7. Traversable slots constructed in existing inlets shall be paid for as inlets partial. For conversion work and method of payment see "TRAVERSABLE SLOT INLETS (PARTIAL) FOR EXISTING INLETS".
8. Sodding to be used on all inlets not located in paved areas and paid for under contract unit price for Performance Turf, SY.
9. For supplementary details see Index No. 201.
10. All reinforcing is Grade 60 bars with 2" min. cover unless otherwise noted. Bars to be cut or bent for 1½" clearance around pipe opening. Provide one additional #4 bar above and at each side of pipe opening.

LAST REVISION	DESCRIPTION:			INDEX NO.	SHEET NO
07/01/10		FDOT 2014 DESIGN STANDARDS	DITCH BOTTOM INLET TYPES C, D, E AND H	232	3 of 7

4 DBI TYPE C, D, AND E INLET DETAILS

C17 SCALE: N.T.S.

DRAINAGE DETAILS 2

THOMAS M. ROSE, PE
FL LICENSE NO. 62860

Cardno TBE
380 Park Place Blvd., Suite 300, Clearwater, Florida, 33759
www.cardnotbe.com - 727.531.3505
Certificate of Authorization No. 3843

New O'Reilly Auto Parts Store:
S.R. 52
HUDSON, FL
(HUDSON #2)

CRAIG A. SCHNEIDER, AIA
ARCHITECT
1736 East Sunshine, Suite 417
Springfield, Missouri 65804
417.862.0558
Fax: 417.862.3265
e-mail: architect@estertyschneider.com

O'Reilly AUTO PARTS
233 SOUTH PATTERSON
SPRINGFIELD, MISSOURI 65802
417-862-2674 PHONE

COMM #	3539
DATE:	03-21-14
REVISION DATE:	05-06-14

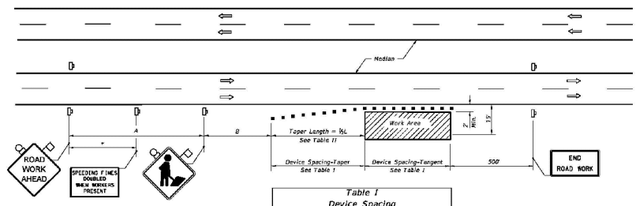

DISTANCE BETWEEN SIGNS		
Speed	Spacing (ft.)	
	A	B
40 mph or less	200	200
45 mph	350	350
50 mph or greater	500	500

* 500' beyond the ROAD WORK AHEAD sign or midway between signs whichever is less.

Table I Device Spacing				
Speed (mph)	Max. Distance Between Devices (ft.)			
	Cones or Tubular Markers		Type I or Type II Barricades or Vertical Panels or Drums	
	Taper	Tangent	Taper	Tangent
25	25	50	25	50
30 to 45	25	50	30	50
50 to 70	25	50	50	100

Table II Taper Length - Shoulder				
Speed (mph)	W_L (ft.)			Notes
	8' Shldr.	10' Shldr.	12' Shldr.	
25	28	35	42	$L = \frac{WS^2}{60}$
30	40	50	60	
35	55	68	82	
40	72	90	107	$L = WS$
45	120	150	180	
50	133	167	200	
55	147	183	220	
60	160	200	240	
65	173	217	260	
70	187	233	280	

8' minimum shoulder width.

W_L =Length of shoulder taper in feet

W = Width of total shoulder in feet (combined paved and unpaved width)

S = Posted speed limit (mph)

SYMBOLS

- Work Area
- Sign With 18" x 18" (Min.) Orange Flag And Type B Light
- Channelizing Device (See Index No. 600)
- Work Zone Sign
- Lane Identification + Direction of Traffic

GENERAL NOTES

1. If the work operation encroaches on the through traffic lanes or when four or more work vehicles enter the through traffic lanes in a one hour period (excluding establishing and terminating the work area), a flagger shall be provided and a FLAGGER sign shall be substituted for the WORKERS sign. The flagger shall be positioned at the point of vehicle entry or departure from the work area.
2. This TCZ plan also applies to work performed in the median more than 2' but less than 12' from the edge of traveleway.
3. When work is being performed on a multilane undivided roadway the signs normally mounted in the median (as shown) shall be omitted.
4. WORKERS signs to be removed or fully covered when no work is being performed.
5. SHOULDER WORK sign may be used as an alternate to the WORKER symbol sign.
6. When a side road intersects the highway within the TTC zone, additional TTC devices shall be placed in accordance with other applicable TCZ Indexes.
7. For general TCZ requirements and additional information, refer to Index No. 600.

DURATION NOTES

1. Signs and channelizing devices may be omitted if all of the following conditions are met:
   a. Work operations are 60 minutes or less.
   b. Vehicles in the work area have high-intensity, rotating, flashing, oscillating, or strobe lights operating

CONDITIONS

WHERE ANY VEHICLE, EQUIPMENT, WORKERS OR THEIR ACTIVITIES ENCROACH THE AREA CLOSER THAN 15' BUT NOT CLOSER THAN 2' TO THE EDGE OF TRAVEL WAY.

LAST REVISION 07/01/07	REVISION DESCRIPTION:	FDOT 2014 DESIGN STANDARDS	MULTILANE, WORK ON SHOULDER	INDEX NO. 612	SHEET NO. 1 of 1

1 WORK ON SHOULDER DETAILS

C18 SCALE: N.T.S.

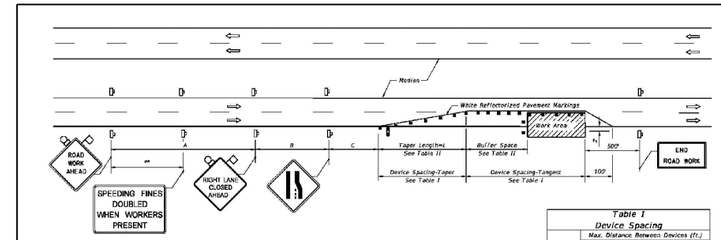

Table II Buffer Space and Taper Length			
Speed (mph)	Buffer Space Dist. (ft.)	Taper Length (12' Lateral Transition) L (ft.)	Notes (Merge)
25	155	125	$L = \frac{WS^2}{60}$
30	200	180	
35	250	245	
40	305	320	
45	360	540	$L = WS$
50	425	600	
55	495	660	
60	570	720	
65	645	780	
70	730	840	

When Buffer Space cannot be attained due to geometric constraints, the greatest attainable length shall be used, but not less than 200 ft.

For lateral transitions other than 12, use Where:

L = Length of taper in feet
W = Width of lateral transition in feet
S = Posted speed limit (mph)

Table I Device Spacing				
Speed (mph)	Max. Distance Between Devices (ft.)			
	Cones or Tubular Markers		Type I or Type II Barricades or Vertical Panels or Drums	
	Taper	Tangent	Taper	Tangent
25	25	50	25	50
30 to 45	25	50	30	50
50 to 70	25	50	50	100

DISTANCE BETWEEN SIGNS			
Speed	Spacing (ft.)		
	A	B	C
40 mph or less	200	200	200
45 mph	350	350	350
50 mph	500	500	500
*55 mph or greater	2640	1640	1000

* The ROAD WORK 1 MILE sign may be used as an alternate to the ROAD WORK AHEAD sign and the RIGHT LANE CLOSED ½ MILE sign may be used as an alternate to the RIGHT LANE CLOSED AHEAD sign.

** 500' beyond the ROAD WORK AHEAD sign or midway between signs whichever is less.

SYMBOLS

- Work Area
- Sign With 18"x 18" (Min.) Orange Flag And Type B Light
- Channelizing Device (See Index No. 600)
- Work Zone Sign
- Advance Warning Arrow Board

GENERAL NOTES

1. Work operations shall be confined to one traffic lane, leaving the adjacent lane open to traffic.
2. On undivided highways the median signs as shown are to be omitted.
3. When work is performed in the median lane on divided highways, the channelizing device plan is inverted and left lane closed and lane ends signs substituted for the right lane closed and lane end signs.

   The same applies to undivided highways with the following exceptions:
   a. Work shall be confined within one median lane.
   b. Additional barricades, cones, or drums shall be placed along the centerline abutting the work area and across the trailing end of the work area.

   When work on undivided highways occurs across the centerline so as to encroach on both median lanes, the inverted plan is applied to the approach of both roadways.
4. Signs and traffic control devices are to be modified in accordance with INTERMITTENT WORK STOPPAGE details (sheet 2 of 2) when no work is being performed and the highway is open to traffic.
5. The two channelizing devices directly in front of the work area may be omitted provided vehicles in the work area have High-intensity rotating, flashing, oscillating, or strobe lights operating.
6. When paved shoulders having a width of 8 ft. or more are closed, channelizing devices shall be used to close the shoulder in advance of the merging taper to direct vehicular traffic to remain within the travel way. See Index No. 612 for shoulder taper formulas.
7. When a side road intersects the highway within the TTC zone, additional TTC devices shall be placed in accordance with other applicable TCZ Indexes.
8. This TCZ plan does not apply when work is being performed in the middle lane(s) of a six or more lane highway. See Index No. 614.
9. For general TCZ requirements and additional information, refer to Index No. 600.

DURATION NOTES

1. Temporary white edgeline may be omitted for work operations less than 3 consecutive calendar days.
2. For work operations up to approximately 15 minutes, signs, channelizing devices, arrow board, and buffer space may be omitted if all of the following conditions are met:
   a. Speed limit is 45 mph or less.
   b. No sight obstructions to vehicles approaching the work area for a distance equal to the buffer space and the taper length combined.
   c. Volume and complexity of the roadway has been considered.
   d. The closed lane is occupied by a class 5 or larger, medium duty truck(s) with a minimum gross weight vehicle rating (GWVR) of 16,001 lb with high-intensity, rotating, flashing, oscillating, or strobe lights mounted above the cab height and operating.
3. For work operations up to 60 minutes, arrow board and buffer space may be omitted if conditions a, b, and c in DURATION NOTE 2 are met, and vehicles in the work area have high-intensity, rotating, flashing, oscillating, or strobe lights operating.

CONDITIONS

WHERE ANY VEHICLE, EQUIPMENT, WORKERS OR THEIR ACTIVITIES ENCROACH ON THE LANE ADJACENT TO EITHER SHOULDER AND THE AREA 2' OUTSIDE THE EDGE OF TRAVEL WAY.

LAST REVISION 07/01/09	REVISION DESCRIPTION:	FDOT 2014 DESIGN STANDARDS	MULTILANE, WORK WITHIN TRAVEL WAY MEDIAN OR OUTSIDE LANE	INDEX NO. 613	SHEET NO. 1 of 2

2 WORK WITHIN TRAVEL WAY DETAILS

C18 SCALE: N.T.S.

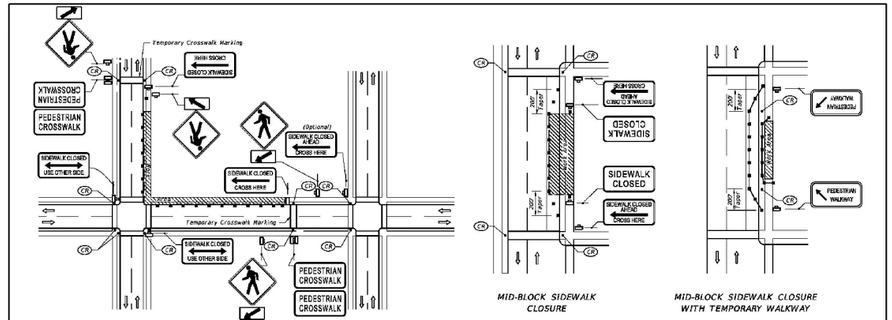

CORNER SIDEWALK CLOSURE WITH TEMPORARY CROSSWALKS

MID-BLOCK SIDEWALK CLOSURE

MID-BLOCK SIDEWALK CLOSURE WITH TEMPORARY WALKWAY

GENERAL NOTES

1. Only the signs controlling pedestrian flows are shown. Other work zone signs will be needed to control traffic on the streets.
2. For spacing of traffic control devices and general TCZ requirements refer to Index No. 600. Maximum spacing between barricades, vertical panels, drums or tubular markers shall not be greater than 25'.
3. Street lighting should be considered.
4. For nightime closures use Type A flashing warning lights on barricades supporting signs and closing sidewalks. Use Type C steady-burn lights on channelizing devices separating the work area from vehicular traffic.
5. Pedestrian traffic signal display controlling closed crosswalks shall be covered or deactivated.
6. Post Mounted Signs located near or adjacent to a sidewalk shall have a 7' minimum clearance from the bottom of sign to the sidewalk.
7. When construction activities involve sidewalks on both sides of the street, efforts should be made to stage the construction so that both sidewalks are not out of service at the same time.
8. In the event that sidewalks on both sides of the street are closed, pedestrians shall be guided around the construction zone.
9. Temporary walkways shall be a minimum of 4' wide with a maximum 0.02 cross slope and a maximum 0.05 running slope between ramps. Temporary walkways less than 5' in width shall provide for a 5' x 5' passing space at intervals not to exceed 200'. Temporary ramps shall meet the requirements for curb ramps specified in Index No. 304. Temporary walkway surfaces and ramps shall be stable, firm, slip resistant, and kept free of any obstructions and hazards such as holes, debris, mud, construction equipment, stored materials, etc.
10. Temporary ramps and temporary crosswalk markings shall be removed with reopening of the sidewalk, unless otherwise noted in the plans. All work and materials associated with constructing temporary curb ramps and temporary crosswalk markings, removal and disposal of temporary curb ramps and temporary crosswalk markings, and restoration to original condition shall be paid for as Maintenance of Traffic, Lump Sum.
11. A pedestrian longitudinal channelizing device shall be placed across the full width of the closed sidewalk.

SYMBOLS

- Work Area
- Channelizing Device (See Index No. 600)
- Work Zone Sign
- Redefined Locations For Either Temporary Or Permanent Curb Ramps.
- Lane Identification + Direction of Traffic
- Pedestrian Longitudinal Channelizing Device

CONDITIONS

WHERE ANY VEHICLE, EQUIPMENT, WORKERS OR THEIR ACTIVITIES ENCROACH ON THE SIDEWALK FOR A PERIOD OF MORE THAN 60 MINUTES.

LAST REVISION 07/01/13	REVISION DESCRIPTION:	FDOT 2014 DESIGN STANDARDS	PEDESTRIAN CONTROL FOR CLOSURE OF SIDEWALKS	INDEX NO. 660	SHEET NO. 1 of 1

3 PEDESTRIAN CONTROL DETAILS

C18 SCALE: N.T.S.

FDOT MOT DETAILS

THOMAS M. ROSE, PE
FL LICENSE NO. 62860

Cardno TBE
380 Park Place Blvd., Suite 300, Clearwater, Florida, 33759
www.cardnotbe.com - 727.531.3505
Certificate of Authorization No. 3843

CRAIG A. SCHNEIDER, AIA
ARCHITECT
1736 East Sunshine, Suite 417
Springfield, Missouri 65804
417.862.0558
Fax: 417.862.3265
e-mail: architect@estierlyschneider.com

New O'Reilly Auto Parts Store:
S.R. 52
HUDSON, FL
(HUDSON #2)

O'Reilly AUTO PARTS
233 SOUTH PATTERSON
SPRINGFIELD, MISSOURI 65802
417-862-2674 PHONE

COMM #	3530
DATE:	03-21-14
REVISION DATE:	05-06-14

ACCEPTABLE FILL MATERIALS: STORMTECH SC-740 CHAMBER SYSTEMS

	MATERIAL LOCATION	DESCRIPTION	AASHTO MATERIAL CLASSIFICATIONS	COMPACTION / DENSITY REQUIREMENT
D	**FINAL FILL:** FILL MATERIAL FOR LAYER 'D' STARTS FROM THE TOP OF THE 'C' LAYER TO THE BOTTOM OF FLEXIBLE PAVEMENT OR UNPAVED FINISHED GRADE ABOVE. NOTE THAT PAVEMENT SUBBASE MAY BE PART OF THE 'D' LAYER	ANY SOIL/ROCK MATERIALS, NATIVE SOILS, OR PER ENGINEER'S PLANS. CHECK PLANS FOR PAVEMENT SUBGRADE REQUIREMENTS.	N/A	PREPARE PER SITE DESIGN ENGINEER'S PLANS. PAVED INSTALLATIONS MAY HAVE STRINGENT MATERIAL AND PREPARATION REQUIREMENTS.
C	**INITIAL FILL:** FILL MATERIAL FOR LAYER 'C' STARTS FROM THE TOP OF THE EMBEDMENT STONE ('B' LAYER) TO 18" (450 mm) ABOVE THE TOP OF THE CHAMBER. NOTE THAT PAVEMENT SUBBASE MAY BE A PART OF THE 'C' LAYER.	GRANULAR WELL-GRADED SOIL/AGGREGATE MIXTURES, <35% FINES OR PROCESSED AGGREGATE. MOST PAVEMENT SUBBASE MATERIALS CAN BE USED IN LIEU OF THIS LAYER.	AASHTO M145[1] A-1, A-2-4, A-3 OR AASHTO M43[1] 3, 357, 4, 467, 5, 56, 57, 6, 67, 68, 7, 78, 8, 89, 9, 10	BEGIN COMPACTIONS AFTER 12" (300 mm) OF MATERIAL OVER THE CHAMBERS IS REACHED. COMPACT ADDITIONAL LAYERS IN 6" (150 mm) MAX LIFTS TO A MIN. 95% PROCTOR DENSITY FOR WELL GRADED MATERIAL AND 95% RELATIVE DENSITY FOR PROCESSED AGGREGATE MATERIALS. ROLLER GROSS VEHICLE WEIGHT NOT TO EXCEED 12,000 lbs (53 kN). DYNAMIC FORCE NOT TO EXCEED 20,000 lbs (89 kN).
B	**EMBEDMENT STONE:** FILL SURROUNDING THE CHAMBERS FROM THE FOUNDATION STONE ('A' LAYER) TO THE 'C' LAYER ABOVE.	CLEAN, CRUSHED, ANGULAR STONE, NOMINAL SIZE DISTRIBUTION BETWEEN 3/4-2 INCH (20-50 mm)	AASHTO M43[1] 3, 357, 4, 467, 5, 56, 57	NO COMPACTION REQUIRED.
A	**FOUNDATION STONE:** FILL BELOW CHAMBERS FROM THE SUBGRADE UP TO THE FOOT (BOTTOM) OF THE CHAMBER.	CLEAN, CRUSHED, ANGULAR STONE, NOMINAL SIZE DISTRIBUTION BETWEEN 3/4-2 INCH (20-50 mm)	AASHTO M43[1] 3, 357, 4, 467, 5, 56, 57	PLATE COMPACT OR ROLL TO ACHIEVE A FLAT SURFACE. [2 3]

PLEASE NOTE:
1. THE LISTED AASHTO DESIGNATIONS ARE FOR GRADATIONS ONLY. THE STONE MUST ALSO BE CLEAN, CRUSHED, ANGULAR. FOR EXAMPLE, A SPECIFICATION FOR #4 STONE WOULD STATE: "CLEAN, CRUSHED, ANGULAR NO. 4 (AASHTO M43) STONE".
2. STORMTECH COMPACTION REQUIREMENTS ARE MET FOR 'A' LOCATION MATERIALS WHEN PLACED AND COMPACTED IN 6" (150 mm) (MAX) LIFTS USING TWO FULL COVERAGES WITH A VIBRATORY COMPACTOR.
3. WHERE INFILTRATION SURFACES MAY BE COMPROMISED BY COMPACTION, FOR STANDARD DESIGN LOAD CONDITIONS, A FLAT SURFACE MAY BE ACHIEVED BY RAKING OR DRAGGING WITHOUT COMPACTION EQUIPMENT. FOR SPECIAL LOAD DESIGNS, CONTACT STORMTECH FOR COMPACTION REQUIREMENTS.

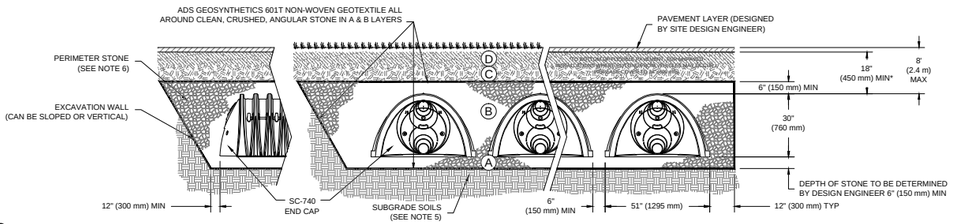

NOTES:

1. SC-740 CHAMBERS SHALL CONFORM TO THE REQUIREMENTS OF ASTM F2418 "STANDARD SPECIFICATION FOR POLYPROPYLENE (PP) CORRUGATED WALL STORMWATER COLLECTION CHAMBERS", OR ASTM F2922 "STANDARD SPECIFICATION FOR POLYETHYLENE (PE) CORRUGATED WALL STORMWATER COLLECTION CHAMBERS".
2. SC-740 CHAMBERS SHALL BE DESIGNED IN ACCORDANCE WITH ASTM F2787 "STANDARD PRACTICE FOR STRUCTURAL DESIGN OF THERMOPLASTIC CORRUGATED WALL STORMWATER COLLECTION CHAMBERS".
3. "ACCEPTABLE FILL MATERIALS" TABLE ABOVE PROVIDES MATERIAL LOCATIONS, DESCRIPTIONS, GRADATIONS, AND COMPACTION REQUIREMENTS FOR FOUNDATION, EMBEDMENT, AND FILL MATERIALS.
4. THE "SITE DESIGN ENGINEER" REFERS TO THE ENGINEER RESPONSIBLE FOR THE DESIGN AND LAYOUT OF THE STORMTECH CHAMBERS FOR THIS PROJECT.
5. THE SITE DESIGN ENGINEER IS RESPONSIBLE FOR ASSESSING THE BEARING RESISTANCE (ALLOWABLE BEARING CAPACITY) OF THE SUBGRADE SOILS AND THE DEPTH OF FOUNDATION STONE WITH CONSIDERATION FOR THE RANGE OF EXPECTED SOIL MOISTURE CONDITIONS.
6. PERIMETER STONE MUST BE EXTENDED HORIZONTALLY TO THE EXCAVATION WALL FOR BOTH VERTICAL AND SLOPED EXCAVATION WALLS.
7. ONCE LAYER 'C' IS PLACED, ANY SOIL/MATERIAL CAN BE PLACED IN LAYER 'D' UP TO THE FINISHED GRADE. MOST PAVEMENT SUBBASE SOILS CAN BE USED TO REPLACE THE MATERIAL REQUIREMENTS OF LAYER 'C' OR 'D' AT THE SITE DESIGN ENGINEER'S DISCRETION.

1 STORMTECH CHAMBER DETAILS
C19 SCALE: N.T.S.

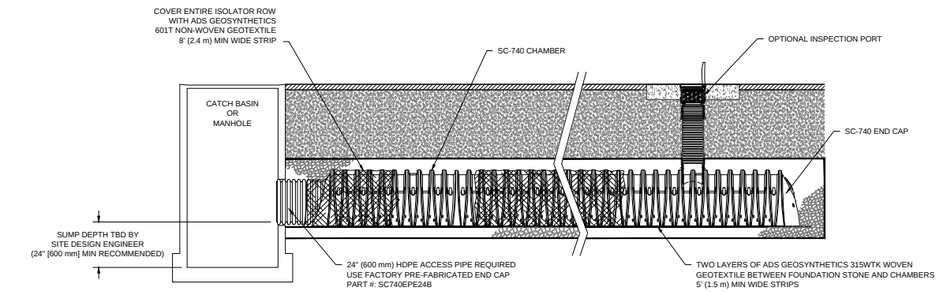

SC-740 ISOLATOR ROW DETAIL
NTS

INSPECTION & MAINTENANCE

STEP 1) INSPECT ISOLATOR ROW FOR SEDIMENT
- A. INSPECTION PORTS (IF PRESENT)
  - A.1. REMOVE/OPEN LID ON NYLOPLAST INLINE DRAIN
  - A.2. REMOVE AND CLEAN FLEXSTORM FILTER IF INSTALLED
  - A.3. USING A FLASHLIGHT AND STADIA ROD, MEASURE DEPTH OF SEDIMENT AND RECORD ON MAINTENANCE LOG
  - A.4. LOWER A CAMERA INTO ISOLATOR ROW FOR VISUAL INSPECTION OF SEDIMENT LEVELS (OPTIONAL)
  - A.5. IF SEDIMENT IS AT, OR ABOVE, 3" (80 mm) PROCEED TO STEP 2. IF NOT, PROCEED TO STEP 3.
- B. ALL ISOLATOR ROWS
  - B.1. REMOVE COVER FROM STRUCTURE AT UPSTREAM END OF ISOLATOR ROW
  - B.2. USING A FLASHLIGHT, INSPECT DOWN THE ISOLATOR ROW THROUGH OUTLET PIPE
    - i) MIRRORS ON POLES OR CAMERAS MAY BE USED TO AVOID A CONFINED SPACE ENTRY
    - ii) FOLLOW OSHA REGULATIONS FOR CONFINED SPACE ENTRY IF ENTERING MANHOLE
  - B.3. IF SEDIMENT IS AT, OR ABOVE, 3" (80 mm) PROCEED TO STEP 2. IF NOT, PROCEED TO STEP 3.

STEP 2) CLEAN OUT ISOLATOR ROW USING THE JETVAC PROCESS
- A. A FIXED CULVERT CLEANING NOZZLE WITH REAR FACING SPREAD OF 45" (1.1 m) OR MORE IS PREFERRED
- B. APPLY MULTIPLE PASSES OF JETVAC UNTIL BACKFLUSH WATER IS CLEAN
- C. VACUUM STRUCTURE SUMP AS REQUIRED

STEP 3) REPLACE ALL COVERS, GRATES, FILTERS, AND LIDS; RECORD OBSERVATIONS AND ACTIONS.

STEP 4) INSPECT AND CLEAN BASINS AND MANHOLES UPSTREAM OF THE STORMTECH SYSTEM.

NOTES

1. INSPECT EVERY 6 MONTHS DURING THE FIRST YEAR OF OPERATION. ADJUST THE INSPECTION INTERVAL BASED ON PREVIOUS OBSERVATIONS OF SEDIMENT ACCUMULATION AND HIGH WATER ELEVATIONS.
2. CONDUCT JETTING AND VACTORING ANNUALLY OR WHEN INSPECTION SHOWS THAT MAINTENANCE IS NECESSARY.

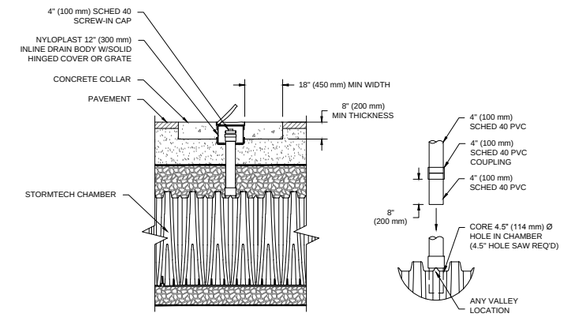

NOTES:
1. INSPECTION PORTS MAY BE CONNECTED THROUGH ANY CHAMBER CORRUGATION VALLEY
2. ALL SCHEDULE 40 FITTINGS TO BE SOLVENT CEMENTED.

CONNECTION DETAIL
NTS

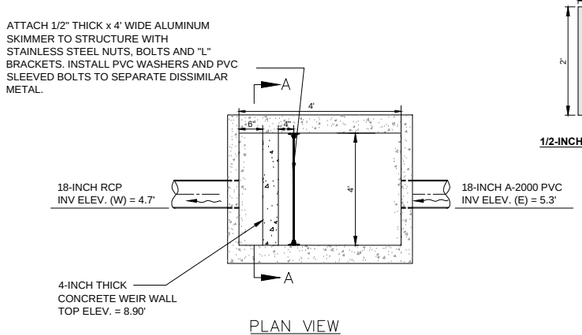

PLAN VIEW

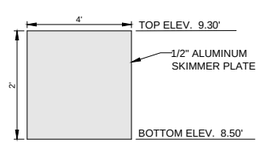

1/2-INCH ALUMINUM SKIMMER PLATE DETAIL

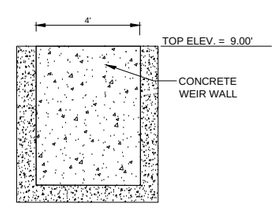

4-INCH THICK CONCRETE WEIR WALL
SECTION A–A

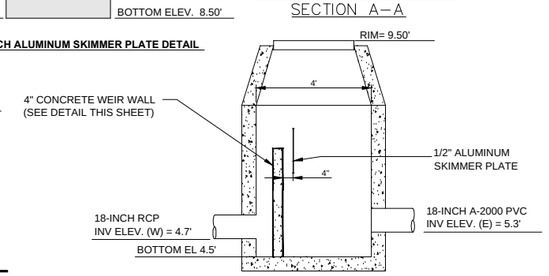

SIDE VIEW

2 CONTROL STRUCTURE DETAIL
C19 SCALE: N.T.S.
FDOT MANHOLE MODIFIED PER INDEX 200 (J BOTTOM)

CROSS SECTIONS

THOMAS M. ROSE, PE
FL LICENSE NO. 62860

Cardno TBE
380 Park Place Blvd., Suite 300, Clearwater, Florida, 33759
www.cardnotbe.com - 727.531.3505
Certificate of Authorization No. 3843

CRAIG A. SCHNEIDER, AIA
ARCHITECT
1736 East Sunshine, Suite 417
Springfield, Missouri 65804
417.862.0558
Fax: 417.862.3265
e-mail: architect@estertyschneider.com

New O'Reilly Auto Parts Store:
S.R. 52
HUDSON, FL
(HUDSON #2)

O'Reilly AUTO PARTS
233 SOUTH PATTERSON
SPRINGFIELD, MISSOURI 65802
417-862-2674 PHONE

COMM #	3539
DATE:	03-21-14
REVISION DATE:	05-06-14

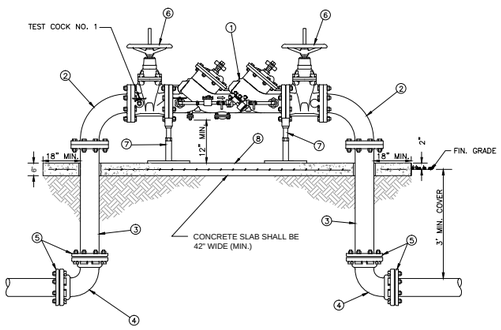

MATERIALS		
ITEM	QUANT.	DESCRIPTION
1	1	3", 4", 6", 8" DOUBLE CHECK VALVE/BFP ASSEMBLY WITH DETECTOR ASSEMBLY
2	2	3", 4", 6", 8" BEND, 90° FLANGE x FLANGE
3	2	3", 4", 6", 8" SPOOL PIECE FLG. x PE. D.I.P.
4	2	3", 4", 6", 8" BEND, 90° M.J. x M.J.
5	4	3", 4", 6", 8" GLAND, RETAINER M.J. (MEGALUG)
6	2	3", 4", 6", 8" VALVE, GATE FLG. x FLG. RESILIENT WEDGE O.S. & Y.
7	2	SUPPORT (AS NEEDED)
8	1	CONCRETE SLAB (6" THICK – 42" WIDE MIN.)

NOTE:
- NO TIE RODS OR EYE BOLT RETAINERS PERMITTED ABOVE GROUND.
- B.F.P. ASSEMBLY TO BE INSTALLED LEVEL & PLUMB.
- MINIMUM CLEARANCE OF 36" TO BE MAINTAINED AROUND ENTIRE DEVICE FOR TESTING
- ENTIRE ASSEMBLY TO BE PAINTED SAFETY BLUE.
- DETECTOR BY–PASS ASSEMBLY TO BE FACTORY INSTALLED AND CERTIFIED
- ALL MECHANICAL JOINTS SHALL BE RESTRAINED WITH MEGALUGS OR APPROVED EQUAL
- BELL JOINT RESTRAINERS SHALL BE PROVIDED ON ALL UNDERGROUND PIPING AS SPECIFIED IN JOINT RESTRAINT TABLE DETAIL
- ALL ABOVE GROUND PIPING SHALL BE FLANGED DUCTILE IRON PIPE (NO GALVANIZED OR PVC)
- ITEM 3 SHALL BE FIELD CUT TO PROPER LENGTH TO ACHIEVE DESIGNATGED GROUND CLEARANCE
- IF SO SPECIFIED, ENTIRE ASSEMBLY TO BE ENCLOSED IN 6' CHAIN LINK FENCE.
- BFP DEVICE MUST BE LISTED WITH THE UNIVERSITY OF SOUTHERN CALIFORNIA FOUNDATION FOR CROSS CONNECTION CONTORL AND HYDRAULIC RESEARCH.

1 / C20

CREATED 02/24/03 REVISED	DOUBLE DETECTOR CHECK VALVE ASSEMBLY/BACKFLOW PREVENTER (SINGLE SERVICE: 3", 4", 6", 8", 10")	PROVIDED FOR INFORMATIONAL PURPOSES ONLY. NO MODIFICATIONS WITHOUT WRITTEN PCU APPROVAL
	PASCO COUNTY UTILITIES	DETAIL 10

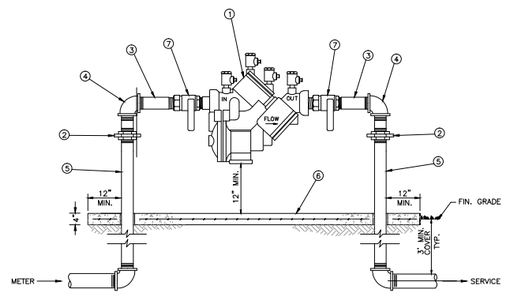

MATERIALS		
ITEM	QUANT.	DESCRIPTION
1	1	BACKFLOW PREVENTER ASSEMBLY, REDUCED PRESSURE ZONE
2	2	UNIONS – GALV.
3	2	NIPPLES – BRASS
4	2	ELBOWS – GALV. 90°
5	2	RISER – GALV.
6	*	CONCRETE SLAB
7	2	BALL VALVES – BRASS OR S.S. (PROVIDED WITH BFP ASS'Y)

NOTE:
- FIELD ADJUST AND CUT ITEM 5 TO THE PROPER LENGTH.
- MINIMUM CLEARANCE OF 24" TO BE MAINTAINED AROUND DEVICE FOR TESTING.
- ENTIRE ASSEMBLY TO BE PAINTED SAFETY BLUE.
- CONCRETE SLAB TO EXTEND 12" MIN. AROUND ENTIRE DEVICE.
- DEVICE MUST BE LISTED WITH THE UNIVERSITY OF SOUTHERN CALIFORNIA FOUNDATION FOR CROSS CONNECTION CONTROL AND HYDRAULIC RESEARCH.

2 / C20

CREATED 02/24/03 REVISED	REDUCED PRESSURE BACKFLOW PREVENTER (SINGLE SERVICE: 3/4", 1", 1–1/2", 2")	PROVIDED FOR INFORMATIONAL PURPOSES ONLY. NO MODIFICATIONS WITHOUT WRITTEN PCU APPROVAL
	PASCO COUNTY UTILITIES	DETAIL 12

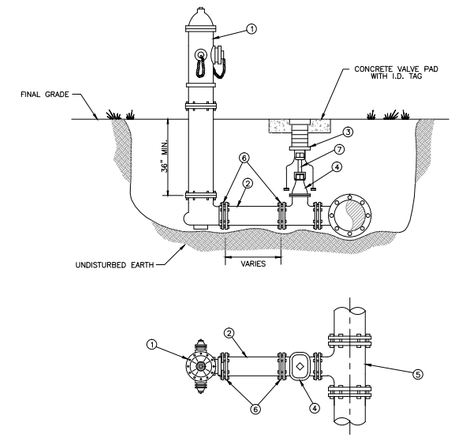

MATERIALS		
ITEM	QUANT.	DESCRIPTION
1	1	HYDRANT, FIRE (5 1/4" VALVE MIN.), PAINTED YELLOW
2	"	6" PIPE, P.V.C. (DR–18)
3	1	BOX, VALVE SLIP TYPE
4	1	6" VALVE, GATE, M.J. RESILIENT WEDGE
5	1	TEE, ANCHORING, M.J.
6	"	6" RESTRAINER GLAND (MEGALUG)
7	"	VALVE EXTENSION ROD, AS NECESSARY (3' MAX. BELOW GRADE)

3 / C20

CREATED 02/24/03 REVISED	FIRE HYDRANT PERPENDICULAR TO THE MAIN	PROVIDED FOR INFORMATIONAL PURPOSES ONLY. NO MODIFICATIONS WITHOUT WRITTEN PCU APPROVAL
	PASCO COUNTY UTILITIES	DETAIL 27

10' MINIMUM FROM TRENCH CENTERLINE, BOTH SIDES

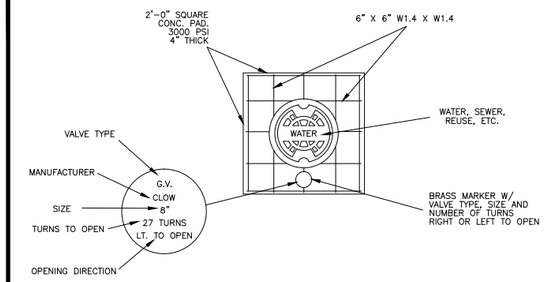

TYPICAL CONCRETE VALVE PAD

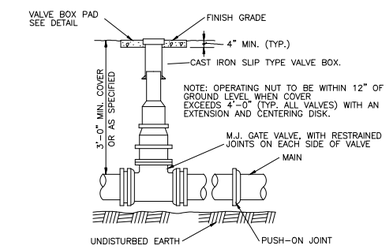

4 / C20

CREATED 02/24/03 REVISED	VALVE BOX DETAIL SLIP TYPE	PROVIDED FOR INFORMATIONAL PURPOSES ONLY. NO MODIFICATIONS WITHOUT WRITTEN PCU APPROVAL
	PASCO COUNTY UTILITIES	DETAIL 30

UTILITY DETAILS 1

THOMAS M. ROSE, PE
FL LICENSE NO. 62860

Cardno TBE
380 Park Place Blvd., Suite 300, Clearwater, Florida, 33759
www.cardnotbe.com - 727.531.3505
Certificate of Authorization No. 3843

CRAIG A. SCHNEIDER, AIA
ARCHITECT
1736 East Sunshine, Suite 417
Springfield, Missouri 65804
417.862.0558
Fax: 417.862.3265
e-mail: architect@estterlyschneider.com

New O'Reilly Auto Parts Store:
S.R. 52
HUDSON, FL
(HUDSON #2)

O'Reilly AUTO PARTS
233 SOUTH PATTERSON
SPRINGFIELD, MISSOURI 65802
417-862-2674 PHONE

COMM #	3539
DATE:	03-21-14
REVISION DATE:	05-06-14

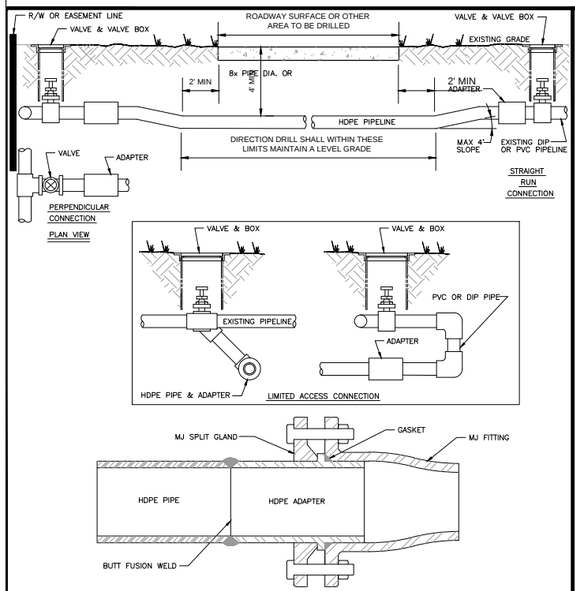

NOTE: -DIRECTIONAL DRILLS SHALL BE COMPLETED USING DR11 HDPE PIPE, DUCTILE IRON SIZE.
- ALL DIRECTIONAL DRILLS SHALL BE AT A DEPTH OF 8x PIPE DIAMETER BELOW THE ROADWAY SURFACE OR 4' WHICHEVER IS GREATER.
-ALL HDPE MUST BE COLOR CODED (SAFETY BLUE-WATER, SAFETY GREEN FOR SEWER AND PANTONE PURPLE FOR RECLAIMED WATER); BUTT FUSION WELDED; AND CONNECTED WITH HDPE-MJ ADAPTER.

1 / C21

CREATED 03/06/03	DIRECTIONAL DRILLING	PROVIDED FOR INFORMATIONAL PURPOSES ONLY. NO MODIFICATIONS WITHOUT WRITTEN PCU APPROVAL
REVISED	PASCO COUNTY UTILITIES	DETAIL 34

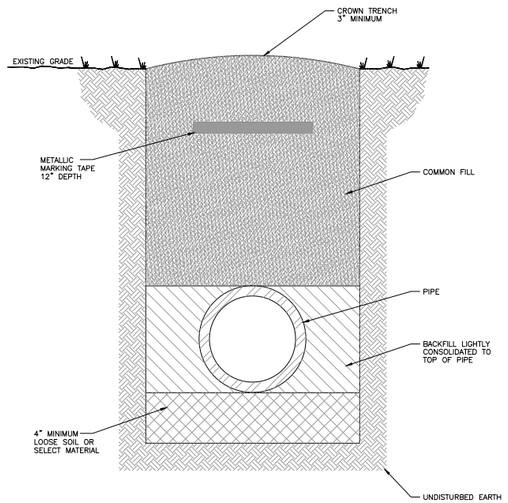

NOTES: -LOOSE SOIL OR SELECT MATERIAL IS NATIVE SOIL EXCAVATED FROM THE TRENCH FREE OF ROCKS AND FOREIGN MATERIAL.
-COMMON FILL TO BE PLACED AND COMPACTED IN 12" LAYERS. ROLLING EQUIPMENT SHALL NOT BE USED FOR COMPACTION UNTIL A MINIMUM OF 18" OF COMMON FILL HAS BEEN PLACED AND COMPACTED OVER THE PIPE. THREE FEET OF FILL SHALL BE PLACED BEFORE A HYDROHAMMER MAY BE USED FOR COMPACTION.

2 / C21

CREATED 02/24/03	PIPE LAYING CONDITIONS STANDARD UNPAVED AREAS	PROVIDED FOR INFORMATIONAL PURPOSES ONLY. NO MODIFICATIONS WITHOUT WRITTEN PCU APPROVAL
REVISED	PASCO COUNTY UTILITIES	DETAIL 35

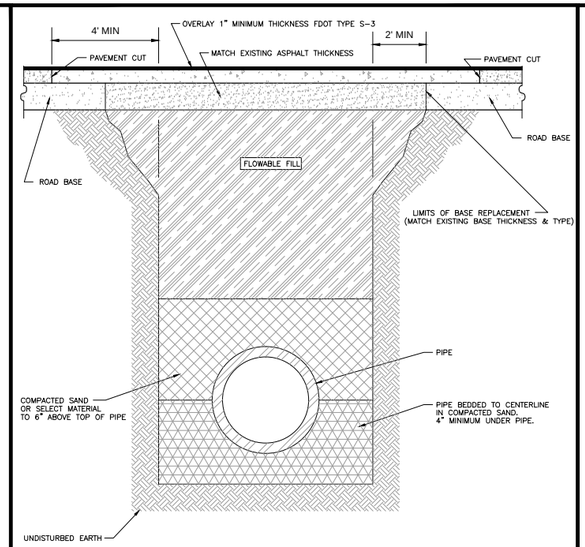

NOTE: -SELECT MATERIAL IS NATIVE SOIL EXCAVATED FROM THE TRENCH FREE OF ROCKS AND FOREIGN MATERIAL.
-COMPACTION TO TOP OF PILE IS TO BE APPROXIMATELY 98% STANDARD PROCTOR, AASHTO T-99.
-EXISTING CONCRETE/ASPHALT PAVEMENT SURFACE AND BASE TO BE CUT SQUARE WITH CONCRETE SAW.

NTS

3 / C21

CREATED 03/06/03	PIPE LAYING CONDITIONS FLOWABLE FILL BACKFILL STANDARD EXISTING PAVED AREAS & ROADWAYS	PROVIDED FOR INFORMATIONAL PURPOSES ONLY. NO MODIFICATIONS WITHOUT WRITTEN PCU APPROVAL
REVISED	PASCO COUNTY UTILITIES	DETAIL 36

NOTE:
PRECAST CONCRETE SHALL ATTAIN A MINIMUM COMPRESSIVE STRENGTH OF 4,000 p.s.i. AT 28 DAYS.

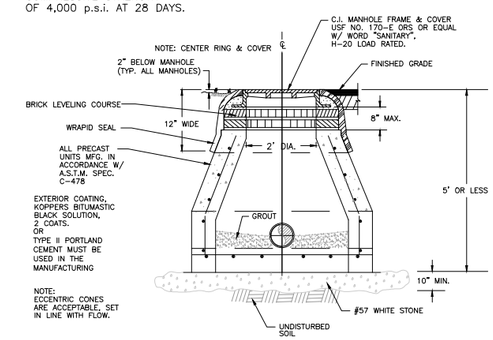

NOTE: - A BEDDING OF CLASS I, CLASS II, OR CLASS III MATERIAL SHALL BE REQUIRED WHEN THE MANHOLE BOTTOM CANNOT BE INSTALLED ON UNDISTURBED SOIL OR IF THE NATIVE SOIL IS CLASS IV OR CLASS V MATERIAL.
- THIS TYPE OF CONSTRUCTION SHALL BE LIMITED TO DEPTHS OF (0-5) FEET.
- EXTERIOR COATING SHALL BE KOPPERS BITUMASTIC BLACK SOLUTION, 2 COATS.
- WRAPID SEAL MUST BE USED ON ALL JOINTS, CASTINGS AND RISER RINGS. WRAPID SEAL MUST BE USED IN ACCORDANCE WITH MANUFACTURER'S RECOMMENDATIONS.
- PASCO COUNTY SHALL HAVE THE OPTION OF SPECIFYING THE TYPE OF INTERIOR LINING TO BE INSTALLED FOR EACH INDIVIDUAL MANHOLE.
- PASCO COUNTY SHALL HAVE THE OPTION OF REQUIRING A NEGATIVE PRESSURE TEST PER ASTM C-1244
- LIFT HOLES MUST NOT PENETRATE THE WALLS

4 / C21

CREATED 02/24/03	MANHOLE SHALLOW CONSTRUCTION (CLOSED BOTTOM)	PROVIDED FOR INFORMATIONAL PURPOSES ONLY. NO MODIFICATIONS WITHOUT WRITTEN PCU APPROVAL
REVISED	PASCO COUNTY UTILITIES	DETAIL 43

UTILITY DETAILS 2

THOMAS M. ROSE, PE
FL LICENSE NO. 62860

Cardno TBE
380 Park Place Blvd., Suite 300, Clearwater, Florida, 33759
www.cardnotbe.com - 727.531.3505
Certificate of Authorization No. 3843

CRAIG A. SCHNEIDER, AIA
ARCHITECT
1736 East Sunshine, Suite 417
Springfield, Missouri 65804
417.862.0558
Fax: 417.862.3265
e-mail: architect@estierlyschneider.com

New O'Reilly Auto Parts Store:
S.R. 52
HUDSON, FL
(HUDSON #2)

O'Reilly AUTO PARTS
233 SOUTH PATTERSON
SPRINGFIELD, MISSOURI 65802
417-862-2674 PHONE

COMM #	3530
DATE:	03-21-14
REVISION DATE:	05-06-14

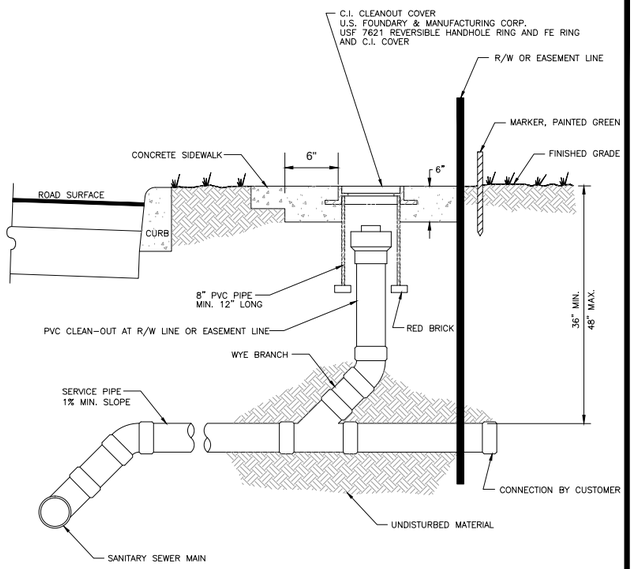

NTS

1
C22

CREATED 02/24/03	SANITARY SEWER – SINGLE WYE CONNECTION AND TYPICAL CLEAN-OUT	PROVIDED FOR INFORMATIONAL PURPOSES ONLY. NO MODIFICATIONS WITHOUT WRITTEN PCU APPROVAL
REVISED	PASCO COUNTY UTILITIES	DETAIL 45

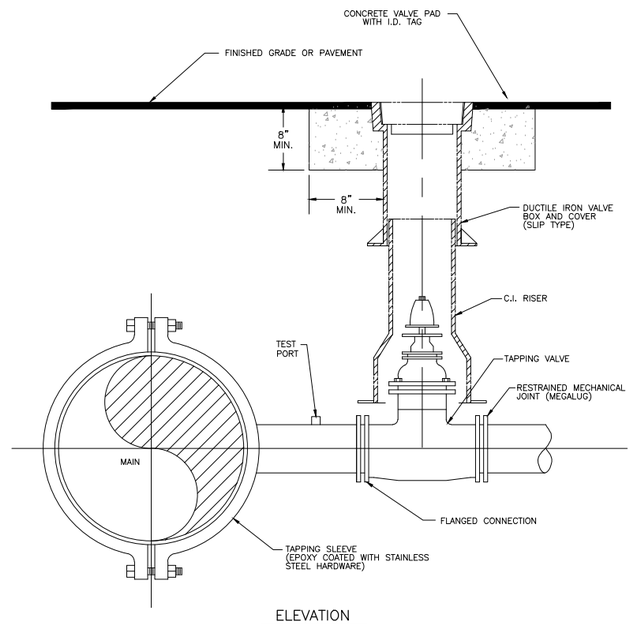

ELEVATION

NOTES:
- SADDLE CONNECTION WILL BE TESTED TO 150 PSI PRIOR TO TAPPING MAIN.
- MECHANICAL JOINTS/UNDERGROUND PIPING SHALL BE RESTRAINED AS SPECIFIED BY COUNTY/ENGINEER.
- VALVE EXTENSION ROD SHALL BE UTILIZED, AS NECESSARY, SO THAT VALVE OPERATING NUT IS A MAXIMUM OF 3' BELOW GRADE.

2
C22

CREATED 02/24/03	WATER, REUSE, AND FORCE MAIN TAPPING DETAIL W/ VALVE LOCATION	PROVIDED FOR INFORMATIONAL PURPOSES ONLY. NO MODIFICATIONS WITHOUT WRITTEN PCU APPROVAL
REVISED	PASCO COUNTY UTILITIES	DETAIL 37

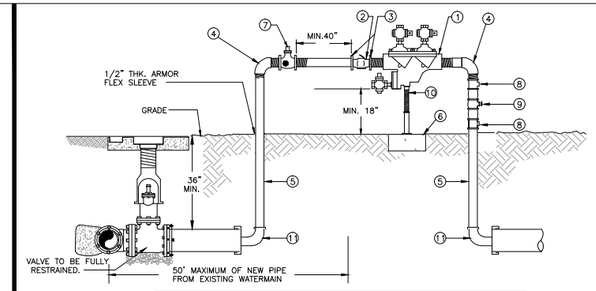

MATERIALS

ITEM	QUANT.	DESCRIPTION
1	1	2" BACKFLOW PREVENTER ASSEMBLY, REDUCED PRESSURE ZONE
2	1	2" METER FURNISHED BY PASCO COUNTY UTILITIES
3	2	BRASS-METER FLANGES OR ADAPTORS
4	2	2" ELBOWS – GALV. 90°
5	2	2" RISER – GALV.
6	*	CONCRETE SLAB
7	1	2" VALVE – BRASS OR S.S.
8	2	TEE/ VALVES – BRASS OR S.S.
9	1	2" GATE VALVE – BRASS OR S.S.
10	1	PIPE STAND (SUPPORT)
11	2	M.J. CAP WITH 2" TAP

NOTE: – CONTRACTOR/CUSTOMER SHALL APPLY AT PASCO COUNTY UTILITIES CUSTOMER SERVICE FOR TEMPORARY WATER SERVICE AT LEAST THREE DAYS PRIOR TO REQUIRED SERVICE DATE.

- THE METER WILL BE FURNISHED, INSTALLED AND INITIAL READING TAKEN BY PASCO COUNTY UTILITIES. ALL FITTINGS, PIPING, VALVES AND MATERIALS INCLUDING THE PASCO COUNTY APPROVED REDUCED PRESSURE BACKFLOW PREVENTION DEVICE SHALL BE FURNISHED AND INSTALLED BY THE CONTRACTOR/CUSTOMER.
- CONTRACTOR/CUSTOMER FURNISHED REDUCED PRESSURE BACKFLOW PREVENTION DEVICE MUST BE INSTALLED BEFORE THE METER IS INSTALLED BY PASCO COUNTY UTILITIES. THE APPROVED BACKFLOW PREVENTION DEVICE SHALL BE TESTED AND CERTIFIED BY PASCO COUNTY UTILITIES CERTIFIED BACKFLOW PREVENTION TECHNICIAN AT TIME OF METER INSTALLATION.
- CONTRACTOR/CUSTOMER SHALL PROTECT THE JUMPER/METER ASSEMBLY FROM DAMAGE.
- CONTRACTOR/CUSTOMER IS RESPONSIBLE FOR BACTERIOLOGICAL TESTING AFTER CONNECTION OF TEMPORARY WATER SERVICE.
- TEMPORARY CONSTRUCTION JUMPER/METER ASSEMBLY SHALL NOT BE REMOVED UNTIL SYSTEM IS ACCEPTED AND DEPARTMENT OF HEALTH CERTIFICATION AND CLEARANCE FOR SERVICE FORM HAS BEEN RECEIVED BY PASCO COUNTY UTILITIES.
- WHEN THE NEW SYSTEM IS ACCEPTED AND THE FINAL METER READING TAKEN BY PASCO COUNTY, THE TEMPORARY CONSTRUCTION JUMPER/METER ASSEMBLY MUST BE COMPLETELY REMOVED FROM M.J CAP TO M.J. CAP AND A NEW WATER MAIN IS TO BE CHLORINATED AND INSTALLED COMPLETING THE FINAL CONNECTION.
- BY APPLYING FOR SERVICE, CONTRACTOR/CUSTOMER AGREES TO TAKE WATER SERVICE FROM PASCO COUNTY UTILITIES IN ACCORDANCE WITH THE APPROPRIATE RATE SCHEDULE AND IN ACCORDANCE WITH PASCO COUNTY UTILITIES RULES AND REGULATION.

3
C22

CREATED 11/18/05	TEMPORARY CONSTRUCTION WATER SERVICE	PROVIDED FOR INFORMATIONAL PURPOSES ONLY. NO MODIFICATIONS WITHOUT WRITTEN PCU APPROVAL
REVISED 05/30/06	PASCO COUNTY UTILITIES	DETAIL 01

UTILITY DETAILS 3

THOMAS M. ROSE, PE
FL LICENSE NO. 62860

Cardno TBE
380 Park Place Blvd., Suite 300, Clearwater, Florida, 33759
www.cardnotbe.com - 727.531.3505
Certificate of Authorization No. 3843

CRAIG A. SCHNEIDER, AIA
ARCHITECT
1736 East Sunshine, Suite 417
Springfield, Missouri 65804
417.862.0558
Fax: 417.862.3265
e-mail: architect@estterlyschneider.com

New O'Reilly Auto Parts Store:
S.R. 52
HUDSON, FL
(HUDSON #2)

O'Reilly AUTO PARTS
233 SOUTH PATTERSON
SPRINGFIELD, MISSOURI 65802
417-862-2674 PHONE

COMM #	3539
DATE:	03-21-14
REVISION DATE:	05-06-14

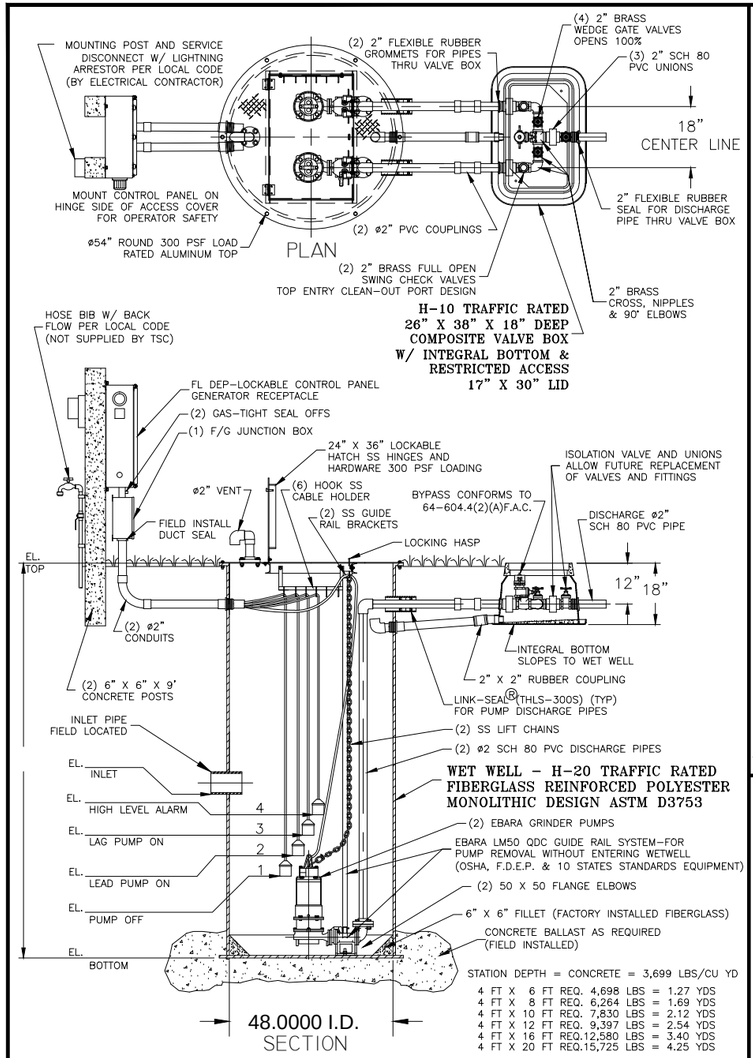

EBARA SEWAGE GRINDER PUMP
48" DUPLEX STATION - 2" PIPING
WITH SLIDE RAIL SYSTEM, V.B. AND F.D.E.P. PANEL
TSC PRE-FAB PUMP SOLUTIONS ©

MODEL
TSC2-48.0 R9.dwg ©

2. GROUT FILLET (1 TO 1 SLOPE TO "HOPPER" BOTTOM)
1. HOSE BIBB WITH REDUCED PRESSURE BACK FLOW PREVENTER
FIELD INSTALL BY CONTRACTOR

JOB: _____

QS: _____

GENERAL NOTES

FURNISH AND INSTALL EBARA SUBMERSIBLE GRINDER PUMPS:

DESIGN CONDITION:

MODEL	32 DGFU	2 HP	HP
GPM			FT/TDH
VOLTAGE	208 / 230 / 460	SINGLE / THREE	PHASE
DISCHARGE	2"		IMPELLER

SEWAGE GRINDER PUMP: RATED FOR TWENTY (20) STARTS PER HOUR.

2. AIR FILLED MOTOR DESIGNED FOR SEWAGE APPLICATION WITH CLASS F INSULATION.
3. DUAL MECHANICAL SHAFT SEALS (SILICON CARBIDE / SILICON CARBIDE) LOCATED OUT OF THE PUMPAGE, IN A SEPARATE OIL FILLED CHAMBER.
4. HIGH TEMPERATURE BALL BEARINGS B-10 RATING OF 60,000 HOURS, UPPER BEARING - SINGLE ROW AND LOWER BEARINGS - DOUBLE ROW TYPE.
5. PUMP SHAFT HORSEPOWER (BHP) SHALL NOT EXCEED MOTOR RATED HORSEPOWER THROUGHOUT THE ENTIRE OPERATING RANGE OF THE PUMP PERFORMANCE CURVE.
6. SINGLE PHASE MOTORS SHALL BE DUAL WOUND, CAPACITOR START-RUN AND CAPABLE OF OPERATING ON 208/230 VOLT WITH A 10% TOLERANCE VOLTAGE (190 TO 260). THREE PHASE MOTORS SHALL BE DUAL WOUND AND CAPABLE OF OPERATING ON 208/230 VOLT WITH A 10% TOLERANCE VOLTAGE (190 TO 260) OR OPERATE ON 460 VOLT BY CHANGING THE MOTOR LEADS INSIDE THE PUMP.

FIBERGLASS WET WELL: SHALL BE A ONE PIECE UNIT WITH INTEGRAL BOTTOM, WALL AND UPPER FLANGE. THE ENTIRE FIBERGLASS WET WELL SHALL HAVE A DYNAMIC LOAD RATING OF 16,000 FT/LBS. EACH UNIT MUST BE SERIAL NUMBERED TO IDENTIFY THE TEST PROCEDURE. ASTM D 3753 & H-20 SPECIFICATIONS SHALL BE REQUIRED AS MINIMUM.

ALUMINUM HATCH: TSC MODEL-54R (54") ROUND WITH 24" X 36" LOCKABLE HATCH, REINFORCED FOR LOAD RATING OF 300 LBS/FT WITH HOLD OPEN SAFETY ARM, LOCKING DEVICE FOR HASP TYPE PADLOCK AND STAINLESS STEEL HARDWARE.

VALVE BOX: FIBERGLASS COMPOSITE (H-10 TRAFFIC RATED) WITH INTEGRAL BOTTOM. (FOR 1 1/4" AND 2" DISCHARGE PIPING SXS HEADER SYSTEM) SHALL BE 26" X 38" X 18" WITH 17" X 30" LIMITED ACCESS LID

ACCESSORIES: #304 S/S - GUIDE RAILS, UPPER GUIDE RAIL BRACKETS, CABLE HOLDER, ANCHOR BOLTS AND PUMP LIFTING CHAINS.

VALVES : SHALL BE SEWAGE SERVICE DESIGN BRASS SWING CHECK VALVES WITH TOP ENTRY CLEAN-OUT PORT AND BRASS WEDGE GATE VALVES OPEN 100%.

PIPING: 2" SCHEDULE 80 PVC.

FLOAT SWITCHES: UL LISTED SJ ELECTRO MODEL (SJ 30 SWENO).

PUMP SUPPLIER SHALL PROVIDE SUBMERSIBLE PUMPS, SLIDE RAIL ASSEMBLIES, CONTROL PANEL, JUNCTION BOX, FLOAT SWITCHES, ALUMINUM HATCH AND ACCESSORIES TO INSURE PROPER OPERATION AND WARRANTY.

THE COMPLETE PACKAGE PUMPING STATION SHALL HAVE PUMP BASES, SLIDE RAIL ASSEMBLIES AND DISCHARGE PIPING ASSEMBLED BY TECHNICAL SALES CORPORATION READY TO SHIP FOR FIELD INSTALLATION.
THE MANUFACTURER OF PRE-FAB PUMP SOLUTIONS©:
TECHNICAL SALES CORPORATION, 4621 N. HALE AVE TAMPA, FL 33614 (813)876-9256

Ebara Submersible Pumps

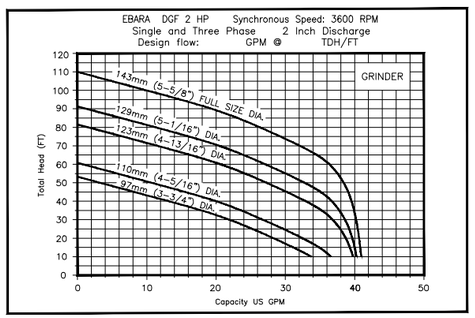

PUMP PERFORMANCE CURVE

CONTROL PANEL -SHALL CONFORM TO FL DEP 64-604.42(A)

CONTROL PANEL SHALL BE TSC MODEL # 38-D IN NEMA 4X FIBERGLASS ENCLOSURE. THE PANEL SHALL MEET STATE OF FLORIDA DEPARTMENT OF ENVIRONMENTAL PROTECTION (DEP), ENVIRONMENTAL PROTECTION COMMISSION (EPC) AND LOCAL CODE REQUIREMENTS GOVERNING PRIVATE LIFT STATIONS.

FLOAT SWITCHES AND CONTROL SYSTEM SHALL BE UL LISTED AND INTRINSICALLY SAFE. ALL COMPONENTS SHALL BE UL LISTED.

A JUNCTION BOX IS REQUIRED, WITH SHOP POURED SEALS BETWEEN BOX AND CONTROL PANEL TO PREVENT SEWER GAS ENTRY INTO CONTROL PANEL.

ELECTRICAL CONTRACTOR TO PROVIDE SERVICE DISCONNECT WITH LIGHTNING ARRESTOR MOUNTED PER LOCAL CODES.

THE CONTROL PANEL SHALL BE SUITABLY INSTALLED TO PREVENT SETTLING OR TIPPING.

CONTROL PANEL LAYOUT

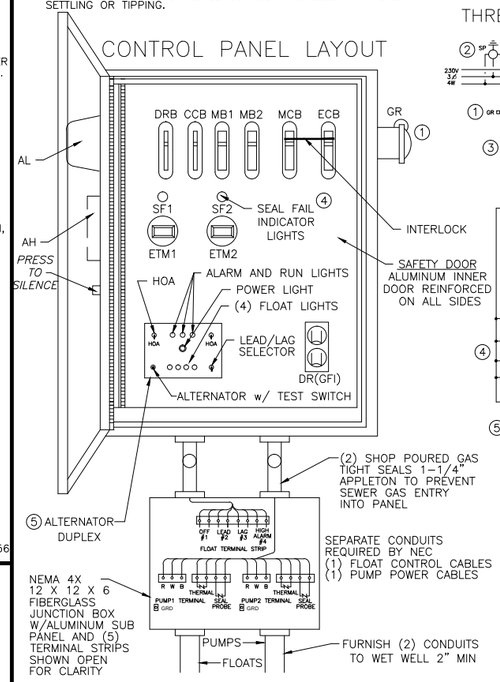

SINGLE PHASE WIRING DIAGRAM

U-RED V-WHITE Y-BLACK

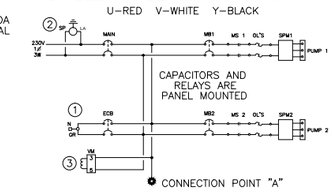

THREE PHASE WIRING DIAGRAM

U-RED V-WHITE W-BLACK

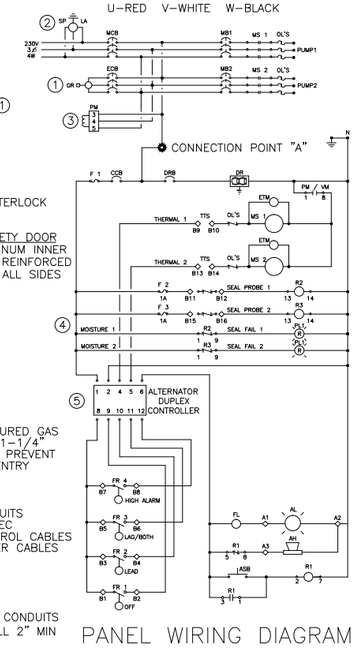

PANEL WIRING DIAGRAM

LEGEND

	AH	ALARM HORN
	AL	ALARM LIGHT
	ASB	ALARM SILENCE BUTTON
5	ATS	ALTERNATOR W/ TEST SWITCH
	CCB	CONTROL CIRCUIT BREAKER
	DR	DUPLEX RECEPTACLE
	DRB	DUPLEX RECEPTACLE BREAKER
	ECB	EMERGENCY CIRCUIT BREAKER
	ETM	ELAPSED TIME METER
	F	FUSE
	FL	FLASHER
	FS	FLOAT SWITCH (REGULATOR)
1	GR	GENERATOR RECEPTACLE
	GRD	GROUND
	HOA	HAND-OFF-AUTOMATIC SELECTOR
	LA	LIGHTNING ARRESTOR
	MB	MOTOR BREAKER
	MCB	MAIN CIRCUIT BREAKER
	MS	MOTOR STARTER
	N	NEUTRAL
	OL'S	OVERLOAD HEATERS
3	PM	PHASE MONITOR
	PTS	PUMP TERMINAL STRIP
	R	RELAY
	RC	RUN CAPACITOR
	RD	DISCHARGE RESISTOR
	RL	PUMP RUN INDICATORS
	RTS	REGULATOR TERMINAL STRIP
	SC	START CAPACITOR
4	SF	SEAL FAIL (SHAFT)
	SR	START RELAY
2	SP	SURGE PROTECTOR
	TTS	THERMAL TERMINAL STRIP

PANELS SHALL CONFORM TO FLORIDA DEP 64-604.400

1. GENERATOR RECEPTACLE FOR EMERGENCY POWER CONNECTION WITH INTERLOCK
2. SURGE PROTECTION AND LIGHTNING PROTECTION ON ALL INCOMING LEGS
3. PHASE PROTECTION SHALL BE PROVIDED
4. SHAFT SEAL FAIL DETECTION
5. ALTERNATOR w/ TEST SWITCH

PANEL MANUFACTURER SHALL BE A "UL" LISTED SHOP.

TSC DUPLEX GRINDER PUMP STATION
FIBERGLASS WET WELL

TECHNICAL SALES
CORPORATION
TSC PRE-FAB PUMP SOLUTIONS©
WATERWORKS & WASTEWATER SPECIALTIES
Representing Innovative Manufacturers
MODEL TSCE2-48.0©
4621 N. HALE AVENUE PH (813)876-9256
TAMPA, FL 33614 FAX (813)874-1194
EMAIL: Sales@TSCTampa.com
REV-9 SCALE: N.T.S.

48" DUPLEX GRINDER STATION-2" PIPING W/ SLIDE RAIL SYSTEM, VALVE BOX AND F.D.E.P. PANEL TSCE2-48.0 R9©

LIFT STATION DETAILS

THOMAS M. ROSE, PE
FL LICENSE NO. 62860

Cardno TBE
380 Park Place Blvd., Suite 300, Clearwater, Florida, 33759
www.cardnotbe.com - 727.531.3505
Certificate of Authorization No. 3843

CRAIG A. SCHNEIDER, AIA
ARCHITECT
1736 East Sunshine, Suite 417
Springfield, Missouri 65804
417.862.0558
Fax: 417.862.3265
e-mail: architect@estertyschneider.com

New O'Reilly Auto Parts Store:
S.R. 52
HUDSON, FL
(HUDSON #2)

O'Reilly AUTO PARTS
233 SOUTH PATTERSON
SPRINGFIELD, MISSOURI 65802
417-862-2674 PHONE

COMM #	3539
DATE:	03-21-14
REVISION DATE:	05-06-14

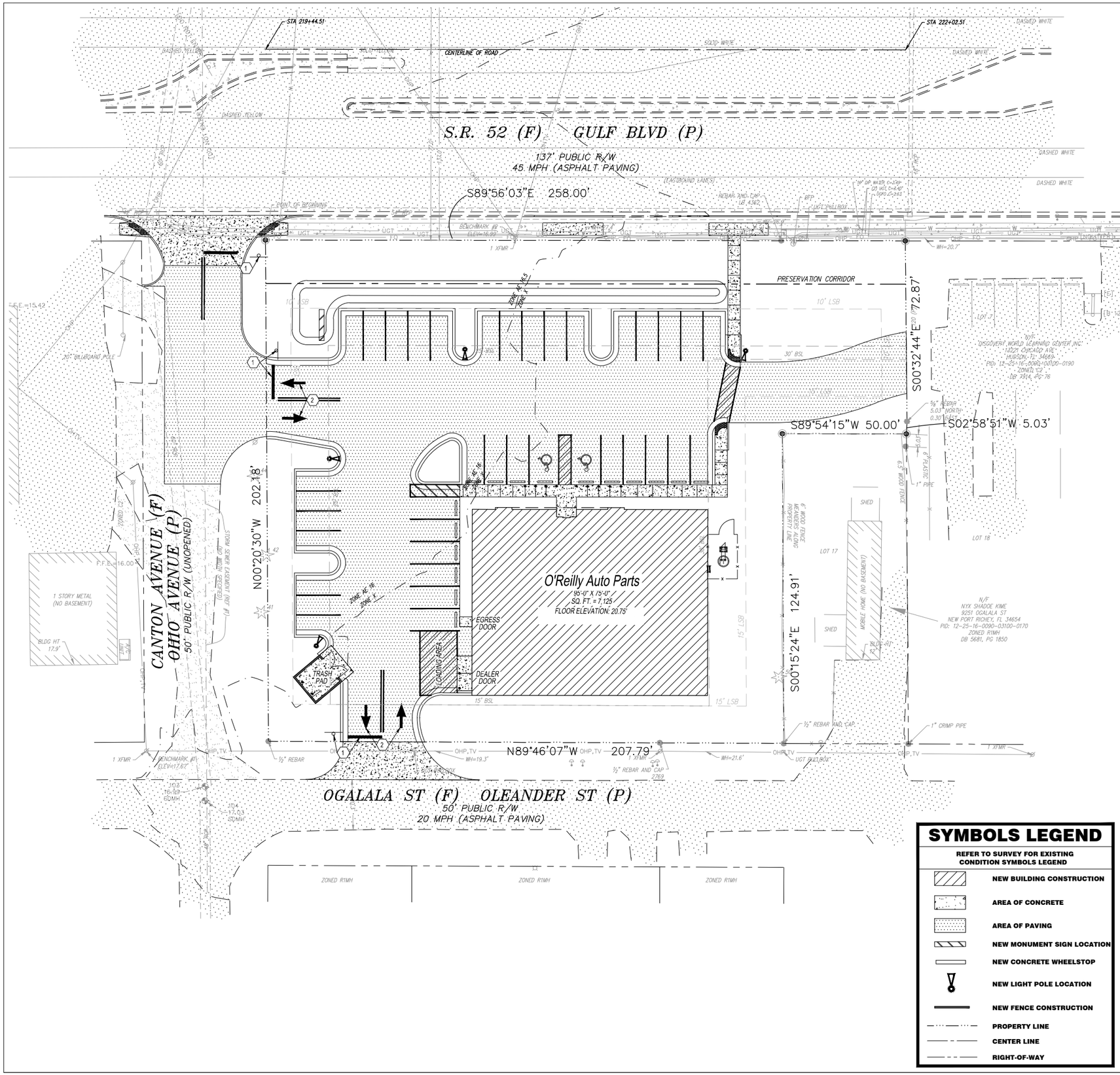

KEY NOTES:

1. STOP SIGN AND PAVEMENT MARKING: FDOT INDEX 17346, REFER TO DETAIL 1/C12,SIGN R1-1
2. DIRECTIONAL ARROW/STRIPING: REFER TO DETAIL 3/C9.

SYMBOLS LEGEND

REFER TO SURVEY FOR EXISTING CONDITION SYMBOLS LEGEND

- NEW BUILDING CONSTRUCTION
- AREA OF CONCRETE
- AREA OF PAVING
- NEW MONUMENT SIGN LOCATION
- NEW CONCRETE WHEELSTOP
- NEW LIGHT POLE LOCATION
- NEW FENCE CONSTRUCTION
- PROPERTY LINE
- CENTER LINE
- RIGHT-OF-WAY

SIGNING AND STRIPING PLAN

SCALE: 1" = 20'

0 20' 40'

N

THOMAS M. ROSE, PE
FL LICENSE NO. 62860

Cardno TBE
380 Park Place Blvd., Suite 300, Clearwater, Florida, 33759
www.cardnotbe.com - 727.531.3505
Certificate of Authorization No. 3843

CRAIG A. SCHNEIDER, AIA
ARCHITECT
1736 East Sunshine, Suite 417
Springfield, Missouri 65804
417.862.0558
Fax: 417.862.3265
e-mail: architect@estertyschnelder.com

New O'Reilly Auto Parts Store:
S.R. 52
HUDSON, FL
(HUDSON #2)

O'Reilly AUTO PARTS
233 SOUTH PATTERSON
SPRINGFIELD, MISSOURI 65802
417-862-2674 PHONE

COMM # 3539

DATE: 03-21-14
REVISION DATE: 05-06-14