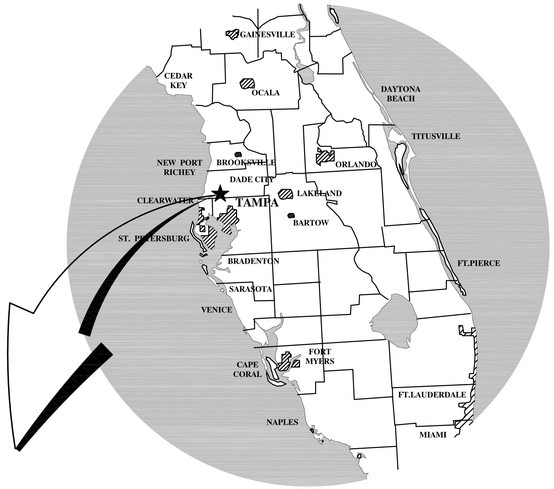

BEXLEY BOULEVARD 1ST EXTENSION

PRELIMINARY DEVELOPMENT PLAN - NR/MU
CONSTRUCTION & STORMWATER MANAGEMENT PLAN
SIMULTANEOUS SUBMITTAL (PDPCPSW - NR/MU)

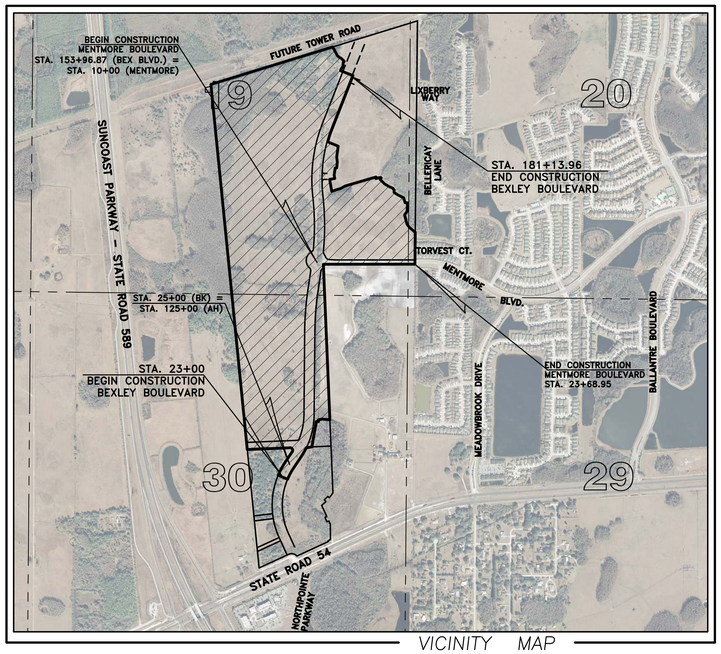

VICINITY MAP
PASCO COUNTY, FLORIDA
SECTION 19 & 30, TOWNSHIP 26 SOUTH, RANGE 18 EAST

INDEX OF CONSTRUCTION PLANS

SHEET NO.	DESCRIPTION
1	COVER SHEET
2	GENERAL NOTES
3	AERIAL SITE PLAN
4-8	PRELIMINARY DEVELOPMENT PLAN
9-10	TYPICAL ROADWAY SECTIONS
11	MASTER DRAINAGE PLAN
12	STORM STRUCTURE DATA
13-15	GRADING & DRAINAGE PLAN
16-18	CROSS-SECTIONS
19	CONTROL STRUCTURE DATA
20	WATER & SEWER KEY MAP
21-30	ROADWAY & UTILITY PLAN & PROFILE
31	ROUNDABOUT PLAN
32-38	SIGNING & PAVEMENT MARKING PLAN
39-40	DRAINAGE DETAILS
41-43	WATER & RECLAIMED WATER SYSTEM DETAILS
44	SANITARY SEWER SYSTEM DETAILS
45	DRAINAGE AREA MAP
46	SURFACE WATER MANAGEMENT PLAN
2 OF 2	PERMIT ROADWAY LANDSCAPE PLAN
B100 - B102	GEOTECHNICAL DATA & REQUIREMENTS BY MEI

PREPARED FOR:
NNP-BEXLEY, LLC
777 S. Harbour Island Boulevard
Suite 320
Tampa, FL 33602
Phone: (813) 620-3555

PREPARED BY:
CLEARVIEW LAND DESIGN, P.L.
Engineering Business C.A. No.: 28858
1213 E. 6th Avenue, Tampa, Florida 33605
Office: 813-223-3919 Fax: 813-223-3975

PERMIT / FILE NOS.	
ADDRESS / CONTROL NO.	
WATER COMMITMENT	
SEWER COMMITMENT	
SWFWMD	
WATER DEP	
SEWER DEP	
FOLIO	

NOTE:
THESE PLANS HAVE BEEN PREPARED IN ACCORDANCE WITH THE MANUAL OF UNIFORM MINIMUM STANDARDS FOR DESIGN, CONSTRUCTION AND MAINTENANCE FOR STREETS AND HIGHWAYS, STATE OF FLORIDA IN EFFECT AT THE TIME OF PASCO COUNTY APPROVAL, AND ARE IN COMPLIANCE WITH THE STANDARDS THEREIN EXCEPT AS NOTED ON THE PLANS. ANY DEVIATIONS NOTED ON THE PLANS SUBSTANTIALLY COMPLY WITH THE INTENT OF THE STANDARDS.

CALL 48 HOURS BEFORE YOU DIG
IT'S THE LAW! DIAL 811
811 Know what's below. Call before you dig.
SUNSHINE STATE ONE CALL OF FLORIDA, INC.

DATE	SHEET NO.	BY

REVISIONS

BEXLEY BOULEVARD
1ST EXTENSION

DATE: JORDAN A. SCHRADER P.E. NO. 74798
FLORIDA PROFESSIONAL ENGINEER

DATE: 08/28/2014 JOB NO. NLC-BX-015

Elevations based on North American Vertical Datum 1988 (NAVD 88)
Conversion from NAVD 88 to NGVD 29 = +0.83 Feet

STREET & DRAINAGE	WATER & SANITARY SEWER
DESIGNED BY: SMIRCH	DESIGNED BY: FINNEY
DRAWN BY: SMIRCH	DRAWN BY: FINNEY

FILE: CV

P:\BEXLEY RANCH\BEXLEY BOULEVARD 1ST EXTENSION\DRAWING\CONDOCV.DWG-COVER SHEET 2014/09/08 5:12 PM MIKE SMIRCH

STORM WATER POLLUTION PREVENTION PLAN

Contained on these plans and within the following notes is a Storm Water Pollution Prevention Plan (SWPPP) which has been developed by Clearview Land Design in accordance with the Florida Department of Environmental Protection's (FDEP) "National Pollutant Discharge Elimination System" (NPDES) Generic Permit for Stormwater Discharge from Large and Small Construction Activities.

The following entities are identified as team members of "SWPPP": Clearview Land Design, the Developer as identified in the title box of these plans, and the site contractor and his sub-contractors. Each team member has specific responsibilities and obligations. In general, all team members, with regard to their involvement and responsibilities on the project, are to implement all necessary storm water management controls to assure compliance with the NPDES Generic Permit for Storm Water Discharges from Construction Activities, the Southwest Florida Water Management District Permit, the applicable local governing agency (i.e. Hillsborough County, Pasco County, etc.) and the guidelines listed in the SWPPP. The duties and responsibilities of the team members as they pertain to the SWPPP are as follows:

CLEARVIEW LAND DESIGN, P.L.

A. Develop SWPPP including, but not limited to, retention/detention ponds, control structures, erosion control methods and locations and stabilization criteria. This design is included within these construction plans and the following notes and instructions.

B. Submit and obtain the necessary design related storm water permits from the Florida Department of Environmental Protection, the Southwest Florida Water Management District and other applicable governmental bodies.

C. Upon notification by the developer of his intent to commence construction, submit a Notice of Intent to the FDEP on behalf of the developer and copy the contractor including SWPPP certification and copy of the permit.

D. Submit to SWFWMD and the operator of the municipal separate storm water system, if applicable, a letter of construction commencement.

E. Complete and submit a Notice of Termination and certification for developer. The NOT's shall be submitted no more than 30 days after
(a) completion of the project and final stabilization of the site or
(b) when responsibility for the site has ended. Final stabilization as defined by EPA is when all soil disturbing activities at the site have been completed and a uniform (e.g. evenly distributed, without large bare areas) perennial vegetative cover with a density of 70% of the native background vegetative cover for the area has been established on all unpaved areas and areas not covered by permanent structures. As an alternative, equivalent permanent stabilization measures (such as riprap, gabions, or geotextiles) may be employed. The client shall notify Clearview Land Design when one of these criteria has been met.

Contractor

A. Sign and return to Clearview a Contractors Certification Form certifying your understanding of and willingness to comply with the Storm Water Pollution Prevention Plan no later than 48 hours prior to commencement of construction. Also, each subcontractor affected by the SWPPP must certify to the contractor that they understand and shall comply with the NPDES permit and SWPPP. A record of these certifications shall be maintained by the contractor on site.

B. During construction, assure compliance with the designed Storm Water Pollution Prevention Plans prepared by Clearview Land Design and the NPDES Generic Permit for Storm Water Discharges from Large and Small Construction Activities.

C. Maintain a copy of the construction plans, which include the Storm Water Pollution Prevention Plan, the NOI, and all inspection reports and certifications on site.

D. Undertake all reasonable Best Management Practices (BMP's) to assure that silted or otherwise polluted storm water is not allowed to discharge from the site during all phases of construction. Stabilization BMP's that may be used include: temporary or permanent seeding, mulching, geotextiles, sodding, vegetative buffer strips, protection of trees and preservation of mature vegetation. Structural erosion and sediment control BMP's that may be used include: straw bale dikes, silt fences, earth dikes, brush barriers, drainage swales, check dams, subsurface drain, pipe slope drain, level spreaders, storm drain inlet protection, outlet protection, sediment traps, and temporary sediment basins. Detention ponds may also be used as temporary sediment basins. Additional BMP's that may need to be implemented include: providing protected storage areas for chemicals, paints, solvents, fertilizers, and other potentially toxic materials. Providing waste receptacles at convenient locations and providing regular collection of wastes, including building material wastes. Minimizing off-site tracking of sediments. Making adequate preparations, including training and equipment to contain spills of oil and hazardous materials. Complying with applicable state or local waste disposal, sanitary sewer or septic system regulations and the use of appropriate pollution prevention measures for allowable non-storm water components of discharge.

E. Notify Clearview Land Design and the developer in writing of any non-storm water pollution sources which are being stored, or otherwise used during the construction of the project, i.e., fertilizers, fuels, pesticides, other chemicals. This notification should be accompanied with the contractor's design and methods to prevent pollution run-off from these sources.

F. Develop a maintenance and inspection plan which includes, but is not limited to the following:

A. The specific areas to be inspected and maintained that includes all the disturbed areas and material storage areas of the site.

B. The erosion and sediment controls identified in the SWPPP to be maintained and inspected and those additional controls that the contractor deems necessary.

C. Maintenance procedures.

D. The procedure to follow if additional work is required or whom to call.

E. Inspections and maintenance forms.

F. The personnel assigned to each task.

The following shall be inspected a minimum of once a week or within 24 hours after 0.50 inches of rainfall:

- Stabilization measures (once a month if fully stabilized).
- Structural controls.
- Discharge points.
- Construction entrances and exits.
- Areas used for storage of exposed materials.

An inspection form shall be completed for each inspection. Any permit violations should be noted and corrective measures shall be taken no later than 7 days after the inspection occurred. If revisions to the SWPPP are needed, a report form for changes in the SWPPP shall be completed and a copy sent to Clearview Land Design, P.L. The original shall be kept on-site as documentation of the change. If the inspection passes, a certification that the facility is in compliance with the SWPPP and the NPDES permit must be signed by a duly authorized representative of the principal executive official of the operator of the SWPPP with one of the following qualifications:

1. Has successfully completed the Florida Stormwater, Erosion and Sediment Control Inspector Training Program.
2. Successfully completed a similar training program.
3. Has enough practical on the job training to be qualified to perform the inspections.

Retain inspection reports and certifications for at least three years.

G. Site stabilization measures shall be initiated as soon as practical but in no case more than 7 days, in portions of the site where construction activities have temporarily or permanently ceased.

H. Releases in Excess of Reportable Quantities.

1. The discharge of hazardous substances or oil in the stormwater discharge(s) from a facility or activity shall be prevented or minimized in accordance with the applicable stormwater pollution prevention plan for the facility or activity. This permit does not relieve the operator of the reporting requirements of 40 CFR part 117 and 40 CFR part 302. Where a release containing a hazardous substance in an amount equal to or in excess of a reporting quantity established under either 40 CFR 117 or 40 CFR 302, occurs during a 24 hour period:

a. The operator is required to notify the State Warning Point (800-210-0519 or 850-413-9911) as soon as he or she has knowledge of the discharge;

b. The operator shall submit within 14 calendar days of knowledge of the release a written description of: the release (including the type and estimate of the amount of material released), the date that such release occurred, the circumstances leading to the release, and remedial steps to be taken, to the Florida Department of Environmental Protection, NPDES Stormwater Section, Mail Station 2500, 2600 Blair Stone Road, Tallahassee, Florida 32399-2400; and

c. The stormwater pollution prevention plan required under Part V of this permit must be modified within 14 calendar days of knowledge of the release to: provide a description of the release, the circumstances leading to the release, and the date of the release. In addition, the plan must be reviewed to identify measures to prevent the reoccurrence of such releases and to respond to such releases, and the plan must be modified where appropriate.

2. This permit does not authorize the discharge of hazardous substances or oil resulting from an on-site spill.

Developer

A. Notify Clearview of your intent to commence construction. Sign the Notice of Intent form as operator of the storm water discharge facility and permittee and return to Clearview Land Design, P.L.

B. Sign a Certification of Storm Water Pollution Prevention Plan and return to Clearview Land Design, P.L.

C. Notify Clearview when it is time to submit a Notice of Termination as defined under Part E of the Clearview Land Design section of the SWPPP. Sign and return to Clearview Land Design, P.L. for submittal to FDEP a Notice of Termination form and certification.

PRE-DEVELOPED SITE INFORMATION:

1. Total site acreage: 297.8 Ac.± (TOTAL NNP-BEXLEY, LLC OWNERSHIP FROM SR 54 TO TOWER ROAD)
2. Land use: VACANT PASTURE
3. Vegetation: PASTURE, WETLANDS
4. Receiving waters or municipal separate storm water system: SANDY BRANCH/ ANCLOTE RIVER
5. 2 Year/24 Hour rainfall depth: 4.5"
6. Soil types: PINEDA, MYAKKA, SELLERS, EAUGALLIE FINE SANDS

PROJECT INFORMATION:

1. Project type: Residential
2. Anticipated construction sequence is as follows:
   1. Complete erosion control installation
   2. Clearing and grubbing
   3. Earthwork activities
   4. Storm water system construction
   5. Utility construction
   6. Base and pavement construction
   7. Final stabilization

   The BMP's listed in Part D of the Contractor section of the SWPPP shall be considered during all phases of construction.
3. Anticipated start date: 3/15/2015
4. Anticipated completion date: 3/15/2020
5. Total acres disturbed: 204.0 Ac. ± (SILT FENCE LIMITS)
6. Pre-developed "C" factor: 0.20
7. Post-developed "C" factor: 0.45
8. The storm water management system, upon completion of construction and appropriate certification and as-built submittals will be operated and maintained by CDD (UNLESS OTHERWISE NOTED) .
9. The potential source of pollution from this project is on-site development and construction activity.

OWNER'S INSTRUCTIONS FOR MAINTENANCE AND INSPECTION OF STORMWATER FACILITIES

The entire stormwater system should be inspected on at least a semi-annual basis. This should include a visual inspection of the pond, pond banks, bleed-down orifices, other control structures, and discharge pipes. These should be kept free of debris and cleaned on a frequency as required to keep them functional, as designed. Mowing/clearing around the structures may be required to prevent vegetation from clogging them.

Wetland plants, if intentionally installed, should be monitored and maintained as required on the approved construction plans. Areas of littoral shelving, which are required to be vegetated but not intentionally planted, should not be cleared of the wetland plants. These areas should have as high a plant coverage as possible, for maximum water filtration.

Sediment sumps, if designed and installed, should have sediment removed as necessary to allow them to efficiently remove suspended particles. They should be re-dug to the original design specifications, if silted in.

For percolation treatment ponds/swales, the owner of the facility shall inspect the pond bottom periodically after heavy rainfall events to check for persistent ponding or pooling of water. All large debris shall be removed and disposed of elsewhere. If prolonged ponding persists, i.e., in excess of 72 hours, the owner shall rake or scarify the surface. If required, the soil in the area of ponding shall be removed and replaced with clean sandy, non-cohesive soils.

Please check the construction plans to see if written reports on monitoring or plant survival rates are required to be sent to any reviewing agencies. Written notes should always be kept which describe maintenance activities undertaken during each inspection.

Specific conditions of all permits may require additional maintenance activities above and beyond those outlined above. Please be aware of all permit conditions as issued by regulatory agencies to ensure permit compliance.

Pond/Lake Excavation Note:
No excavation shall extend below the permitted design depths/elevations shown on the drawings, unless additional testing supports otherwise; and no lower semi-confining unit clayey soil material and/or no limestone materials shall be excavated, regardless if these materials are encountered within the permitted excavation depths/elevations. If any lower semi-confining unit clayey soil materials or limestone materials are encountered above the permitted depths/elevations, then excavation operations shall cease in the general area and the Engineer of Record shall be notified immediately.

NOTE: CONTRACTOR SHALL INSPECT EROSION CONTROL DAILY (INCLUDING BUT NOT LIMITED TO TYPICAL OUTFALLS). CORRECTIVE ACTION SHALL BE TAKEN IMMEDIATELY TO REPAIR OR REPLACE AS NEEDED.

LEGAL DESCRIPTION: SEE PRELIMINARY DEVELOPMENT PLAN

GENERAL EROSION AND TURBIDITY CONTROL NOTES

1. The Site Subcontractor shall be responsible for installation and maintenance of all erosion and turbidity controls and the quality and quantity of offsite or wetland discharges.
2. Prior to construction, the Site Subcontractor is responsible for having his dewatering plan and turbidity control plan approved by the applicable reviewing agencies. Refer to the project's permit approvals and permit conditions for agencies requiring such review and approval. Questions concerning appropriate techniques should be addressed to those agencies and/or discussed with the project engineer and owner.
3. The appropriate turbidity and erosion control methodologies selected by the Site Subcontractor for this project should be made following assessment of the plans and project site specific factors and after consultations as needed with the project engineer and appropriate agencies.
4. The Site Subcontractor will be responsible for obtaining any and all necessary permits for such activity; several factors to consider are listed below:
   - 4.1. Clay content in excavated materials and/or permeabilities rates
   - 4.2. Depth of cut in ponds, trenches, or utility lines
   - 4.3. Ambient ground water levels
   - 4.4. Actual rainfall amounts and time of year relative to normal rainy season
   - 4.5. Proximity to wetlands, water bodies or offsite properties
   - 4.6. 'Class' designation of receiving water bodies (i.e., Outstanding Florida Waters, shellfish harvesting areas, etc.)
   - 4.7. Density, type, and proximity of upland vegetation to be retained during construction (for use as possible filtration areas)
   - 4.8. Fill height relative to natural grade and length and steepness of the proposed slopes
   - 4.9. Existing topography and directions of surface flow
   - 4.10. Type of equipment used
   - 4.11. Project type
   - 4.12. Duration of construction activities
   - 4.13. Separation distance of onsite ponds
   - 4.14. Ambient quality of surface and groundwater
   - 4.15. Temporary stockpile locations and heights
5. At the onset of construction, the Site Subcontractor, as the party responsible for implementation of the erosion and sediment control plan, shall assess the above described conditions and factors with respect to relative cost effectiveness and select the appropriate methods of protection. A fairly extensive list of techniques are presented below but it must be stressed that any or all of the following may be necessary to maintain water quality and quantity standards.
6. The construction sequencing should be thought out in advance of initiation to provide adequate protection of water quality.
7. Any offsite disturbance shall be restored to the Pre or better condition.
   - 7.1. Discharges of water quantities which affect offsite properties or may damage wetlands are also prohibited by regulating agencies.
   - 7.2. Discharges which exceed 29 N.T.U.'s over the background levels are in violation of state water quality standards.
8. The erosion and turbidity control measures shown hereon are the minimum required for agency approval. Additional control and measures may be required due to the Site Subcontractor's construction sequence & unforeseen weather conditions. Any additional measures deemed necessary by the Site Subcontractor shall be included in the lump sum bid with no extras for materials and labor allowed.
9. Hay bales or silt screens shall be installed prior to land clearing to protect water quality and to identify areas to be protected from clearing activities and maintained for the duration of the project until all soil is stabilized.
10. Floating turbidity barriers shall be in place in flowing systems or in open water lake edges prior to initiation of earthwork and maintained for the duration of the project until all soil is stabilized.
11. No clay material shall be left exposed in any stormwater storage facility.
    - 11.1. If clay or sandy-clays are encountered during stormwater storage excavation, the Site Subcontractor shall notify the Engineer immediately before proceeding with further excavation.
    - 11.2. If the Engineer of Record has determined that such soils are non-confining and must be excavated to meet permit and design conditions, excavation may proceed after obtaining written authorization from the appropriate governing agency.
    - 11.3. If said soils are left exposed at the permitted and designed depth, the Site Subcontractor shall over-excavate the pond's bottom and side slopes by a minimum of twenty-four (24") inches and backfill with clean sands to help prevent suspension of fine particles in the water column.
12. The installation of temporary erosion control barriers shall be coordinated with the construction of the permanent erosion control features to the extent necessary to assure effective and continuous control of erosion and water pollution throughout the life of the construction phase.
13. The type of erosion control barriers used shall be governed by the nature of the construction operation and soil type that will be exposed. Silty and clayey material may require solid sediment barriers to prevent turbid water discharge, while sandy material may need only silt screens or hay bales to prevent erosion. Floating turbidity curtains should generally be used in open water situations. Diversion ditches or swales may be required to prevent turbid stormwater runoff from being discharged to wetlands or other water bodies. It may be necessary to employ a combination of barriers, ditches, and other erosion/turbidity control measures if conditions warrant.
14. Where pumps are to be used to remove turbid waters from construction areas, the water shall be treated prior to discharge to the wetlands. Treatment methods include, for example, turbid water being pumped into grassed swales or appropriate upland vegetated areas (other than upland preservation areas and wetland buffers), sediment basins, or confined by an appropriate enclosure such as turbidity barriers or low berms, and kept confined until turbidity levels meet State Water Quality Standards.
15. The Permittee shall schedule his operations such that the area of unprotected erodible earth exposed at any one time is not larger than the minimum area necessary for efficient construction operation, and the duration of exposed, uncompleted construction to the elements shall be as short as practicable. Clearing and grubbing shall be so scheduled and performed such that grading operations can follow immediately thereafter. Grading operations shall be so scheduled and performed that permanent erosion control features can follow immediately thereafter if conditions on the project permit.
16. Water derived from various dewatering methods should be passed through sufficiently wide areas of existing upland vegetation to filter out excess turbidity. If this is not sufficient, the water shall be retained in previously constructed permanent stormwater ponds or else retained in temporary sedimentation basins until the clarity is suitable to allow for its discharge. Plugging the outfalls from completed stormwater ponds may be needed to avoid discharge. However, such situations should be monitored closely to preclude berm failure if water levels rise too high.
17. Water can be transported around the site by the use of internal swales or by pumps and pipes.
18. Sheet flow of newly filled or scraped areas may be controlled or contained by the use of brush barriers, diversion swales, interceptor ditches or low berms. Flow should be directed toward areas where sediments can sufficiently settle out.
19. Exposed soils shall be stabilized as soon as possible, especially slopes leading to wetlands. Stabilization methods include solid sod, seeding and mulching or hydromulching to provide a temporary or permanent grass cover mulch blankets, filter fabrics, etc., can be employed to provide vegetative cover.
20. Energy dissipaters (such as rip rap, a gravel bed, hay bales, etc.) shall be installed at the discharge point of pipes or swales if scouring is observed.
21. Attempt to install roadway curb and gutters as soon as possible to reduce the surface area for erosion to occur.
22. Implement storm drain inlet protection (hay bales or gravel) to limit sedimentation within the stormwater system. Perform inspections and periodic cleaning of sediments which wash out into the streets until all soil is stabilized.
23. Water discharge velocities from impounded areas and temporary sedimentation basins shall be restricted to avoid scouring in receiving areas.
24. If water clarity does not reduce to state standards rapidly enough in holding ponds, it may be possible to use chemical agents such as alum to flocculate or coagulate the sediment particles.
25. Hay bales, silt screens, or gravel beds can be added around the pipe or swale discharge points to help clarify discharges. Spreader swales may help dissipate cloudy water prior to contact with wetlands.
26. All fuel storage areas or other hazardous storage areas shall conform to accepted state or federal criteria for such containment areas.
27. Vehicle or equipment washdown areas will be sufficiently removed from wetlands or offsite areas.
28. Fugitive dust controls (primarily by using water spray trucks) shall be employed as needed to control windborn emissions.
29. If the above controls remain ineffective in precluding release of turbid water, especially during pond or utility line dewatering, then the contractor may be compelled to use a vertical dewatering system such as well points or sock drains to withdraw groundwater which may already be clear enough to allow for direct discharge to wetlands.
30. Ongoing inspections and periodic maintenance by the Site Subcontractor shall occur daily (at a minimum) to insure the above methods are working suitably. Corrective action must be taken immediately to repair or replace any damaged BMP's to ensure the above methods are working properly.
31. Site Subcontractors are required to obtain and thoroughly review The Florida Development Manual: A Guide to Sound Land and Water Management, which was developed by the State of Florida Department of Environmental Protection in 1988. This provides fairly in-depth discussions of recommended techniques and also provides specific design and technical standards. A copy of this document is available for review at Clearview Land Design, P.L.

GENERAL CONSTRUCTION NOTES:

1. Prior to construction, the Contractor shall obtain from the Engineer or Owner a copy of all pertinent permits related to this project. It is the Contractor's responsibility to assure that all construction activities are in compliance with the conditions of all permits and approvals. Contractor is also responsible for having his dewatering plan approved by SWFWMD.
2. All construction, materials and workmanship are to be in accordance with Pasco County Land Development Code and DOT Specifications, latest editions.
3. Grass and mulch, or solid sod, all areas in existing rights- of-way disturbed by construction. In the proposed rights-of- way a 16" wide area behind the back of curb shall be solid sodded. The remainder of the proposed rights-of-way shall be stabilized with Sod or Seed & Mulch in accordance with applicable County standards. On slopes 4:1 and flatter, seed & mulch may be used. On slopes steeper than 4:1, sod shall be used. Sod slopes steeper than 4:1 shall be installed with sod pegs per County standards.
4. Contractor is to coordinate all work within, but not limited to Pasco County rights-of-way with utility companies in order to prevent damage to utility lines and making of adjustments to same, if required.
5. Suitable fill obtained through excavation of streets and detention ponds shall be placed on lots and adjacent land in accordance with the Master Drainage and Grading Plan as directed by the Engineer.
6. Sod/Seed & Mulch shall be placed in accordance with applicable City/County standards as well as in accordance with standard and specific conditions in the SWFWMD permit, if applicable. At a minimum this shall include sodding of all pond embankments of a slope 4:1 or greater to the NW (SHWL) line, as well as seeding and mulching of the balance of the pond tracts (including pond berms, excluding the area below NW (SHWL)), sodding a minimum of 16" from the back of curb, and stabilizing all other areas within the project using sod or seed & mulch per County standards. On slopes 4:1 and flatter, seed & mulch may be used. On slopes steeper than 4:1, sod shall be used. Sod slopes steeper than 4:1 shall be installed with sod pegs per County standards.
7. Site clearing shall be performed per the approved construction plans and in accordance with Pasco County Land Development Code. Installation and maintenance of the required barricading and erosion control shall be the responsibility ofthe site development contractor unless otherwise designated.
8. Prior to beginning construction, Contractor shall expose all existing utility inverts to which a tie-in is proposed and have Engineer verify the elevation and adequacy of these inverts.
9. All subsurface construction shall comply with the "Trench Safety Act." The Contractor shall ensure that the method of trench protection and construction is in compliance with the Occupational Safety and Health Administration (OSHA)regulations.
10. Siltation accumulations greater than the lesser of 12 inches or one-half the depth of the siltation barrier shall be immediately removed and placed in upland areas.
11. During land alteration and construction activities, it shall be unlawful to remove vegetation by grubbing or to place soil deposits, debris, solvents, construction material, machinery or other equipment of any kind within the dripline of a tree to remain on the site unless otherwise approved by the County.
12. All erosion control installation and installation coordination shall be the responsibility of the Contractor. Clearview Land Design, if contracted by the Owner, will stake the alignment of the proposed erosion control and shall limit its responsibility and coordination at that point. Be advised that the construction approval and maintenance of the erosion control shall be the sole responsibility of the Site Contractor.
13. Building downspouts to be directed to the on-site storm drainage system.
14. Future expansion areas, if disturbed, to be seeded and mulched or sodded to prevent erosion to existing pavement surfaces.
15. Should any noticeable soil slumping or sinkhole formation become evident, the applicant/developer shall immediately notify the County, Tampa Bay Water (TBW), and SWFWMD, and adopt one or more of the following procedures as determined to be appropriate by the County and SWFWMD:
    - 15.1. If the slumping or sinkhole formation becomes evident before or during construction activities, stop all work (except for mitigation activities) in the affected area and remain stopped until the County and SWFWMD approve resuming construction activities.
    - 15.2. Take immediate measures to ensure no surface water drains into the affected areas.
    - 15.3. Visually inspect the affected area.
    - 15.4. Excavate and backfill or grout as required to fill the affected area and prevent further subsidence.
    - 15.5. Use soil reinforcement materials in the backfilling operation,when appropriate.
    - 15.6. If the affected area is in the vicinity of a water-retention area,maintain a minimum distance of two feet from the bottom of the retention pond to the surface of the lime-rock or karst connection.
    - 15.7. If the affected area is in the vicinity of a water-retention area and the above methods do not Stabilize the collapse, relocate the retention area.
    - 15.8. Discharge of storm-water into depressions with direct or demonstrated hydrologic connection to the Floridan Aquifer shall be prohibited.
16. The site shall be graded to within 12 inches of the final grade. Where fill is proposed it shall be placed in compliance with the geotechnical/geological engineering report recommendations (including any lift depths recommended) and compacted to a minimum density of 95% of the modified Proctor maximum dry density. Density tests to confirm compaction shall be required within the building pad area, before the next lift is placed. Upon completion of the land development construction, a professional engineer shall provide a certification to Pasco County that the project, including each pad area, complies with the recommendations of the geotechnical/geological engineering report.
17. The engineer responsible for the project shall certify to the County Engineering Services Director (thru PC Engineering Inspections) that the select material below the stabilized subgrade meets these standards prior to installation of the Base. Certification shall strictly comply with the subgrade certification form available in "Engineering Services Department: A Procedural Guide for the Preparation of Assurances of Completion and Maintenance.
18. The engineer responsible for the project shall certify to County Engineering Services Director that the underdrains have been properly installed prior to the installation of any asphalt. Certification shall strictly comply with the underdrain certification form available in Engineering Services Department: A procedural Guide for the Preparation of Assurance of Completion and Maintenance.
19. If during construction activities any evidence of the presence of State and Federally protected plant and/or animal species is discovered, work shall come to an immediate stop and Pasco County shall be notified within two working days of the plant and/or animal species found on the site.
20. If during construction activities any evidence of historic resources, including but not limited to aboriginal or historic pottery, prehistoric stone tools, bone or shell tools, historic trash pits, or historic building foundation, are discovered, work shall come to an immediate stop and the Florida Department of Historic Resources (State Historic Preservation Officer) and Pasco County shall be notified within two working days of the resources found on the site.
21. Prior to construction, a Building Permit shall be obtained for all structures that have a footer, regardless of size, through the Central Permitting Division; i.e.,including, but not inclusive of, buildings, accessories, dumpster walls, and retaining walls.
22. All first floor elevations (FF) shall be a minimum of one (1) foot above the base flood elevation (and meet the requirements of Pasco County LDC 1104) and be at least sixteen (16) inches above the highest crown line of the street lying between the projection of the side-building lines, unless otherwise approved by the County Administrator (per LDC 902).

ESTIMATED EARTHWORK QUANTITIES (UNADJUSTED)*:

VOLUME:
CUT = 450,000 CY
FILL = 550,000 CY

NET = -100,000 CY

* PROVIDED AS AN ESTIMATE PER PASCO COUNTY REQUIREMENTS – NOT INTENDED AS A BID QUANTITY

GEOTECHNICAL REPORT
THESE PLANS REFERENCE THE BEXLEY BLVD. EXTENSION GEOTECHNICAL REPORT, DATED AUGUST 20, 2014, PREPARED BY MORTENSEN ENGINEERING, INC. (MEI) AVAILABLE UPON REQUEST.

SOIL REUSE REQUIREMENTS

At least the following six (6) types of materials are present on-site that require proper handling/treatment by the Contractor, during the course of site development/construction activities, in accordance with the noted reuse requirements for each type. Although some soil material quality control testing will be randomly and periodically performed by the project Geotechnical Consultant, as required, working for the Owner, it is the Contractors sole responsibility to reuse onsite soil materials as described and specified below. All discovered or future filling or material reuse work onsite not in accordance or compliance with these notes, or any future adverse impacts or consequences resulting from the Contractors failure to properly reuse soil materials onsite as specifically described below, will be the Contractors sole responsibility for remedy and repair at his cost. If the Contractor has any questions regarding any of the soil materials onsite, the project Geotechnical reports (which he needs to obtain from the Owner or Geotechnical Consultant/ Engineer), or any questions associated with the notes below, it is presumed that the Contractor will satisfactorily resolve such questions/concerns prior to site demolition, clearing, grubbing, stripping and excavation operations begin.

Please note, local, state and federal rules, laws, and regulations prohibiting soil reuse as described below shall take precedence and shall be followed to the fullest extent.

1. Site Demolition Debris (Site demolition debris, not generally considered an environmental/contamination hazard, includes such items as wood pieces, concrete pieces, plastic pipe pieces,certain metal/steel pieces, or similar. If any such debris or other demolition debris is considered an environmental/contamination hazard, or if burial onsite of such materials is prohibited by the governing environmental agency, then all such materials shall be hauled off site by the Contractor for proper disposal, in accordance with all applicable governing environmental agency requirements. In no case, shall any such debris materials remain, orbe placed by the Contractor, beneath any type of structure, pavement, roadway, house, building, pipeline, slab, etc.)All Site Demolition Debris shall be removed from the site development and disposed of properly in accordance with all applicable governing environmental agency requirements.

2. Clearing and Grubbing Debris (Site clearing and grubbing debris includes all larger organic materials, such items as trees, stumps, limbs, brush, vegetation, or similar; all such materials must be either "burned" or "mulched" by the Contractor prior to reuse or disposal onsite.)If acceptable to the governing environmental agency, then all such "burned" or "mulched" site clearing/grubbing debris, if approved in writing first by the Owner/Geotechnical Consultant/Engineer, could be:
   - 2.1.1. placed as "mulch" material surface dressing in future landscape areas, stockpiling of such "mulched" materials (amounts/locations), if acceptable, will be directed by the Owner/Geotechnical Consultant//Landscape Architect/Engineer;
   - 2.1.2. placed in temporarily excavated littoral shelf areas in selected stormwater ponds, or in temporarily excavated selected wetland mitigation ponds, in either case not in side banks and not below the permitted design depth of the pond, or such debris could be buried in temporarily excavated passive recreation/park areas (at least 30 feet from any structure) at approved depths/locations, but all these disposal areas will require adequate soil mixing (mix soil with the mulch) and then refilling (with compaction) to required design grades;
   - 2.1.3. placed along the bottom of selected floodplain mitigation ponds (not in side banks), not below the permitted excavation depth of the pond, but will require adequate soil cover;
   - 2.1.4. placed along the bottom of selected deeper stormwater ponds (not in side banks), not below the permitted design depth, but will require adequate soil cover.
   - 2.2. In all instances, the minimum pond depth (including floodplain and wetland mitigation areas) shall be no less than required by the Engineer.
   - 2.3. All organic debris burial areas in stormwater pond areas and floodplain mitigation pond areas will require adequate soil cover of 18 – 24 inches (with compaction) by the Contractor, meaning at least an adequate weight/thickness of soil material overtop the buried organic debris, such that there will be no future floating up of debris; and for all organic debris burial areas in littoral shelf areas, wetland mitigation pond areas, and passive recreation/park areas, adequate soil/mulch mixing (with compaction) will be necessary by the Contractor, such that no significant future unacceptable settlement of a littoral shelf area, created wetland area, or park/grassed area will occur. If any of these procedures are contemplated by the Contractor, then the Contractor shall notify the owner/Geotechnical Consultant/Engineer in writing, at the start of construction, with some specific information, including the estimated quantity and types of materials, to which stormwater ponds, floodplain mitigation ponds, wetland mitigation ponds, or passive recreation/park areas they propose to use for this type of organic debris disposal, and what approximate elevations will be the top and bottom of the organic debris.

3. Muck/Peat Organic Materials (Typically generated from wetland or lowland areas, or similar areas, permitted for impact or displacement, including excavation of unsuitable organic materials and refilling with suitable sandy soils to accommodate development; includes significant organic peat materials, organic sandy muck materials, and mucky or organic sand materials, designated either Pt or A-8, per the Unified and AASHTO Soil Classification Systems, respectively; those organic materials whose presence, or placement by the Contractor, is unacceptable beneath any type of structure, pavement, roadway, house, building, pipeline, slab, etc.) If acceptable to the governing environmental agency, then all such muck/peat (significant) organic materials, if approved in writing first by the Owner/Geotechnical Consultant/Engineer, could be:
   - 3.0.1. placed as "peat/muck/organic matter" surface layer in new or created wetland mitigation areas, stockpiling of such "significant organic" materials (amounts/locations), if acceptable, will be directed by the Owner/Wetland Consultant;
   - 3.0.2. placed in temporarily excavated littoral shelf areas in selected stormwater ponds, or in temporarily excavated selected wetland mitigation ponds, in either case not in side banks and not below the permitted design depth of the pond, or such organic materials could be buried in temporarily excavated passive recreation/park areas (at least 30 feet from any structure) at approved depths/locations, but all these disposal areas will require adequate soil mixing (mix soil with the organic materials) and then refilling (with compaction) to required design grades;
   - 3.0.3. placed along the bottom of selected floodplain mitigation ponds (not in side banks), not below the permitted excavation depth of the pond, but will require adequate soil cover;
   - 3.0.4. placed along the bottom of selected deeper stormwater ponds (not in side banks), not below the permitted design depth, but will require adequate soil cover.
   - 3.1. All organic debris burial areas in stormwater pond areas and floodplain mitigation pond areas will require adequate soil cover (with compaction) by the Contractor, meaning at least an adequate weight/thickness of soil material overtop the buried organic debris, such that there will be no future floating up of debris; and for all organic debris burial areas in littoral shelf areas, wetland mitigation pond areas, and passive recreation/park areas, adequate soil/organics mixing (with compaction) will be necessary by the Contractor, such that no significant future unacceptable settlement of a littoral shelf area, created wetland area, or park/grassed area will occur.
   - 3.2. If any of these procedures are contemplated by the Contractor, then the Contractor shall notify the Owner/Geotechnical Consultant/Engineer in writing, at the start of construction, with some specific information, including the estimated quantity and types of materials, to which stormwater ponds, floodplain mitigation ponds, wetland mitigation ponds, or passive recreation/park/landscape berm areas they propose to use for this type of organic material disposal, and what approximate elevations will be the top and bottom of the organic materials.

4. Topsoils/Site Strippings (Typically generated from upland areas, after demolition/clearing/grubbing/discing operations; stripping of surficial organics/topsoils being a requirement over at least all structure, building, concrete slab and pavement areas prior to filling to accommodate development; includes topsoils and organic laden sands; those topsoils/organic sand materials whose presence, or placement by the Contractor, is unacceptable beneath any type of structure, pavement, roadway, house, building, pipeline, slab, etc.)
   - 4.1. If acceptable to the governing environmental agency, all such topsoils/organic laden sand materials, if approved in writing first by the Owner/Geotechnical Consultant/Engineer, could be:
   - 4.1.1. placed as fill in new (larger) landscape/grass common areas or landscape berm areas (with compaction), stockpiling of such "topsoils/organic laden sand materials" (amounts/locations), if acceptable, will be directed by the Owner/Landscape Consultant;
   - 4.1.2. placed in temporarily excavated littoral shelf areas in selected stormwater ponds, or in temporarily excavated selected wetland mitigation ponds, in either case not in side banks and not below the permitted design depth of the pond, or such topsoils/organic laden sand materials could be buried in temporarily excavated passive recreation/park areas (at least 30 feet from any structure) at approved depths/locations, but all these disposal areas will require refilling (with compaction) to required design grades;
   - 4.1.3. placed along the bottom of selected floodplain mitigation ponds (not in side banks), not below the permitted excavation depth of the pond;
   - 4.1.4. placed along the bottom of selected deeper stormwater ponds (not in side banks), not below the permitted design depth.
   - 4.2. All topsoil/organic laden sand disposal areas in littoral shelf areas, wetland mitigation pond areas, passive recreation/park areas, or landscape/berm areas will require adequate compaction by the Contractor, such that no significant future unacceptable settlement of a littoral shelf area, created wetland area, park/grassed area, or landscape berm will occur.
   - 4.3. If any of these procedures are contemplated by the Contractor, then the Contractor shall notify the Owner/Geotechnical Consultant/Engineer in writing, at the start of construction, with some specific information, including the estimated quantity and types of materials, to which stormwater ponds, floodplain mitigation ponds, wetland mitigation ponds, passive recreation/park areas, or landscape berm areas they propose to use for this type of organic debris disposal, and what approximate elevations will be the top and bottom of the organic debris.

5. Non-Structural Clayey Sand/Clay Materials (Typically generated from pond/lake excavations or from utility pipeline/manhole excavations; such clayey sand/clay materials, with typically 40% fines or more passing the No. 200 sieve, designated either SC, CL, CH or A-4 to A-7, per the Unified and AASHTO Soil Classification Systems, respectively; such clayey sand/clay materials being unsuitable or unacceptable for reuse by the Contractor as building pad fill, structural fill, roadway embankment fill, and pipeline or manhole excavation backfill.)
   - 5.1. If acceptable to the governing environmental agency, all such clayey sand/clay materials, if approved in writing first by the Owner/Geotechnical Consultant/Engineer, could be:
   - 5.1.1. placed as fill in new (larger) landscape/grass common areas or landscape berm areas (with compaction), provide some surface drainage relief, use where infiltration and drainage is not an important issue, provide some surface sandy soils (min. of 18-inches) as directed by the Landscape Consultant for planting; stockpiling of such "clayey sand/clay materials" (amounts/locations), if acceptable, will be directed by the Owner/Landscape Consultant;
   - 5.1.2. placed in temporarily excavated littoral shelf areas in selected stormwater ponds, or in temporarily excavated selected wetland mitigation ponds, in either case not in side banks and not below the permitted design depth of the pond, or such clayey sand/clay materials could be buried in temporarily excavated passive recreation/park areas (at least 30 feet from any structure) at approved depths/locations, but all these disposal areas will require refilling (with compaction) to required design grades, and the top 2 feet (min.) being sand materials (not clayey materials) for turbidity control and planting;
   - 5.1.3. placed along the bottom of selected floodplain mitigation ponds (not in side banks), not below the permitted excavation depth of the pond; however, a 12-inch layer (min.) of sand material overtop the clayey materials will be necessary for turbidity control.
   - 5.1.4. placed along the bottom of selected deeper stormwater ponds (not in side banks), not below the permitted design depth, however, a 12-inch layer (min.) of sand material overtop the clayey materials will be necessary for turbidity control.
   - 5.2. All clayey sand/clay disposal areas in littoral shelf areas, wetland mitigation pond areas, passive recreation/park areas, or landscape/berm areas will require adequate compaction by the Contractor, such that no significant future unacceptable settlement of a littoral shelf area, created wetland area, park/grassed area, or landscape berm will occur.
   - 5.3. If any of these procedures are contemplated by the Contractor, then the Contractor shall notify the Owner/Geotechnical Consultant/Engineer in writing, at the start of construction, with some specific information, including the estimated quantity and types of materials, to which stormwater ponds, floodplain mitigation ponds, wetland mitigation ponds, passive recreation/park areas, or landscape berm areas they propose to use for this type of clayey sand/clay disposal, and what approximate elevations will be the top and bottom of the clayey materials.

6. Structural Sand Fill Materials (Typically generated from pond/lake excavations, cut from higher elevation areas, or from utility pipeline/manhole excavations; such sand materials, with typically 35% fines or less passing the No. 200 sieve, designated either SP, SP-SM, SM or A-2-4, A-2-6 or A-3, per the Unified and AASHTO Soil Classification Systems, respectively; such sand materials being suitable or acceptable for reuse by the Contractor as building pad fill, structural fill, roadway embankment fill, and pipeline or manhole excavation backfill.)
   - 6.1. All such sand materials shall be reused onsite by the Contractor, per the Geotechnical reports, as building pad fill, structural fill, roadway embankment fill, and pipeline or manhole excavation backfill; placed by the Contractor in loose lifts not exceeding 12-inches, compacted to at least 95% or 98% modified Proctor (per ASTM D-1557 or AASHTO T-180), whichever is applicable depending upon the future use of the filled area (see Geotechnical reports); with density testing of each fill lift for acceptance by the Geotechnical Consultant, upon Contractor request, prior to the next fill lift being placed.

DATE	DESCRIPTION	BY
	REVISIONS	

CLEARVIEW LAND DESIGN, P.L.
Engineering Business C.A. No.: 28858
1213 E. 6th Avenue, Tampa, Florida 33605
Office: 813-223-3919 Fax: 813-223-3975

DATE:
JORDAN A. SCHRADER P.E. NO. 74798
FLORIDA PROFESSIONAL ENGINEER

GENERAL NOTES

JOB NO. NLC-BX-015
DESIGN SMIRCH
DRAWN FERREIRA
DATE 08/28/2014
FILE GN

BEXLEY BOULEVARD 1ST EXTENSION

PREPARED FOR: NNP-BEXLEY, LLC

Elevations based on North American Vertical Datum 1988 (NAVD 88)
Conversion from NAVD 88 to NGVD 29 = +0.83 Feet

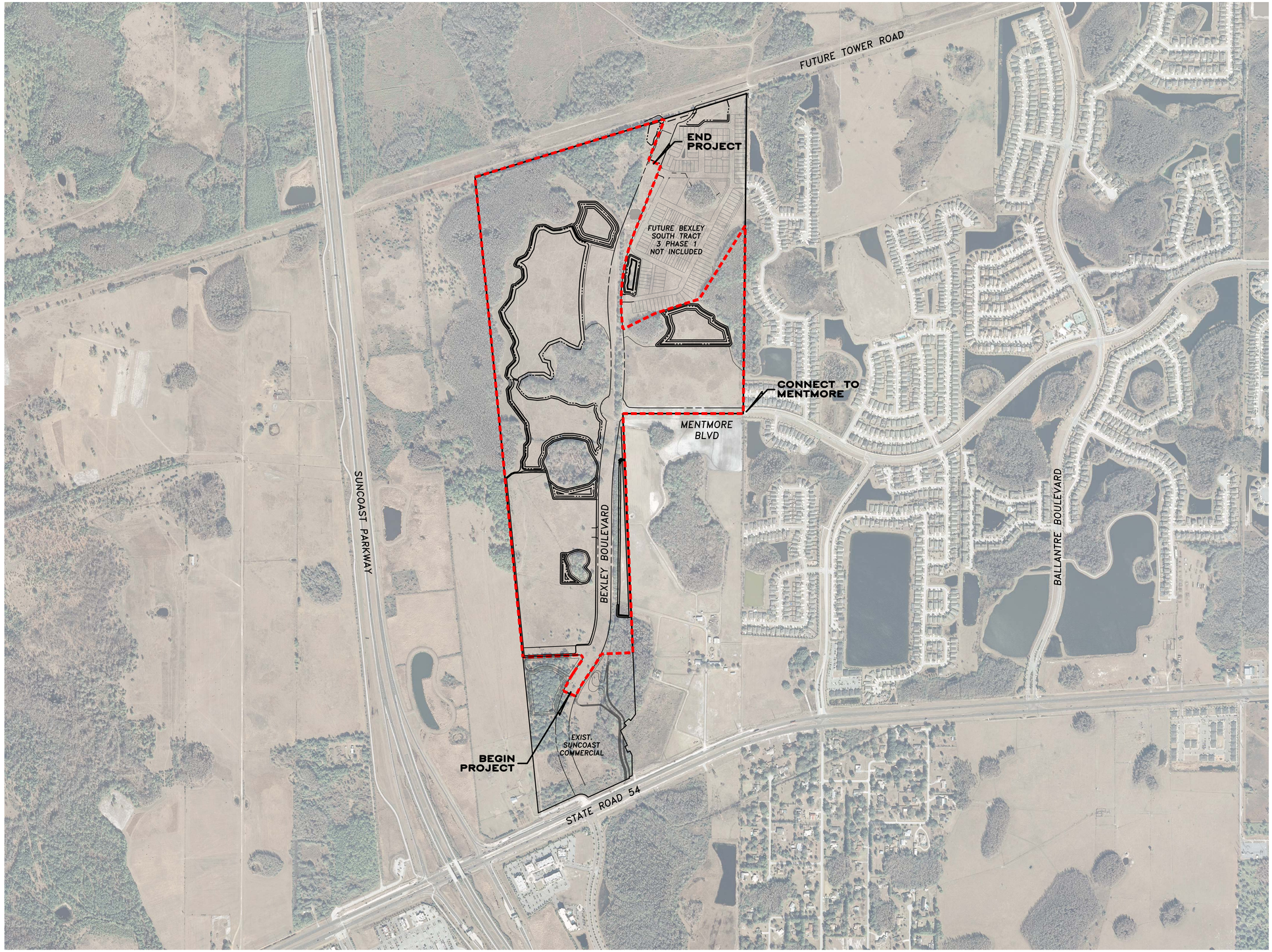

N

1000 500 0 500 1000

SCALE: 1" = 500'

THIS EXHIBIT WAS PREPARED FOR ILLUSTRATIVE PURPOSES ONLY. THE LATEST SUITABLE DIGITAL AERIAL IMAGES HAVE BEEN USED, HOWEVER, THIS MAY NOT ACCURATELY DEPICT CURRENT SITE CONDITIONS. ADDITIONAL ENGINEERING, ENVIRONMENTAL REVIEWS, FIELD SURVEYING AND DATA COLLECTION ARE NECESSARY TO CORRECTLY PORTRAY ACTUAL SITE CONDITIONS. THIS EXHIBIT IS SUBJECT TO CHANGE WITHOUT NOTICE BASED ON THE ABOVE.

DATE OF PHOTOGRAPH: 2011

DATE	DESCRIPTION	BY
	REVISIONS	

CLEARVIEW LAND DESIGN, P.L.
Engineering Business C.A. No.: 28858
1213 E. 6th Avenue, Tampa, Florida 33605
Office: 813-223-3919 Fax: 813-223-3975

DATE:
JORDAN A. SCHRADER P.E. NO. 74798
FLORIDA PROFESSIONAL ENGINEER

AERIAL SITE PLAN

JOB NO. NLC-BX-015	BEXLEY BOULEVARD 1ST EXTENSION
DESIGN SMIRCH	
DRAWN DRM	PREPARED FOR: NNP-BEXLEY, LLC
DATE 08/28/2014	Elevations based on North American Vertical Datum 1988 (NAVD 88) Conversion from NAVD 88 to NGVD 29 = +0.83 Feet
FILE ASP	SHEET 3 OF 46 SHEETS

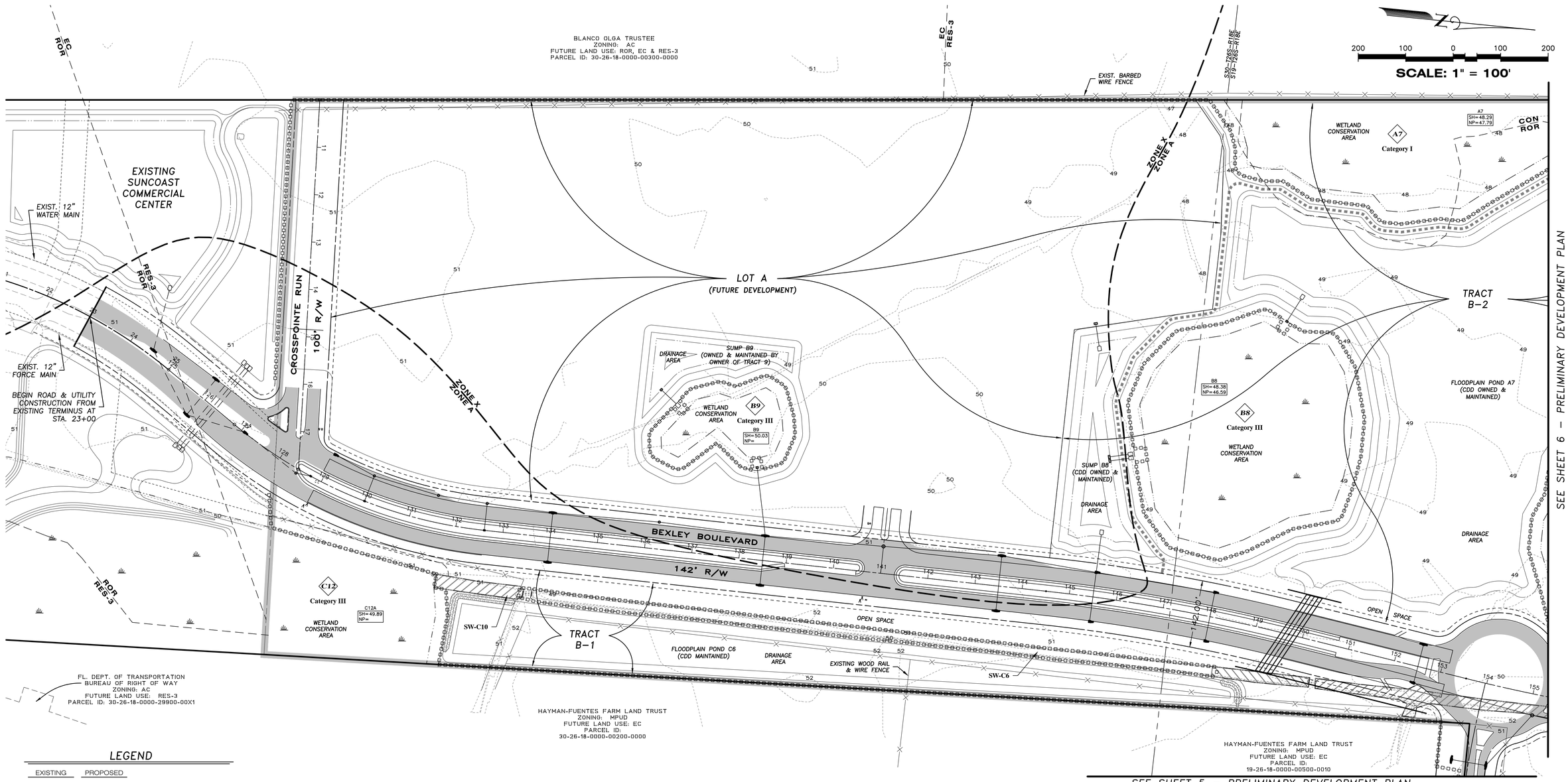

SEE SHEET 5 – PRELIMINARY DEVELOPMENT PLAN

LEGEND

EXISTING	PROPOSED	
		STORM DRAINAGE STRUCTURE
10	10	STRUCTURE NO.
+15.0	115.00 OR 115+00	SPOT ELEVATION
115	115.00	CONTOUR
		DIRECTION OF SURFACE FLOW
		STAKED EROSION CONTROL (REPRESENTS THE SWFWMD BUFFER LIMITS WHERE ADJACENT TO A PROTECTED WETLAND)
COEWL		ACOE WETLAND LINE
SWFWMD		SWFWMD WETLAND LINE
25' O.S.		25' OFFSET FROM WETLAND LINE (SHOWN FOR INFORMATIONAL PURPOSES)
ZONE A		1992 FEMA FLOOD ZONE BOUNDARY
C12		WETLAND ID*
CATEGORY I		PASCO WETLAND CATEGORY
C12 SH=49.80 NP=N/A		SEASONAL HIGH WATER ELEVATION* *TAKEN FROM CURRENT PROJECT APPROVALS
		PROJECT PDP BOUNDARY
		PROPOSED WETLAND IMPACTS

SEE MASTER DRAINAGE PLAN FOR WETLAND SUMMARY TABLE

THERE ARE NO KNOWN WELLHEAD PROTECTION AREAS WITHIN 1,000 FEET OF THE DEVELOPMENT

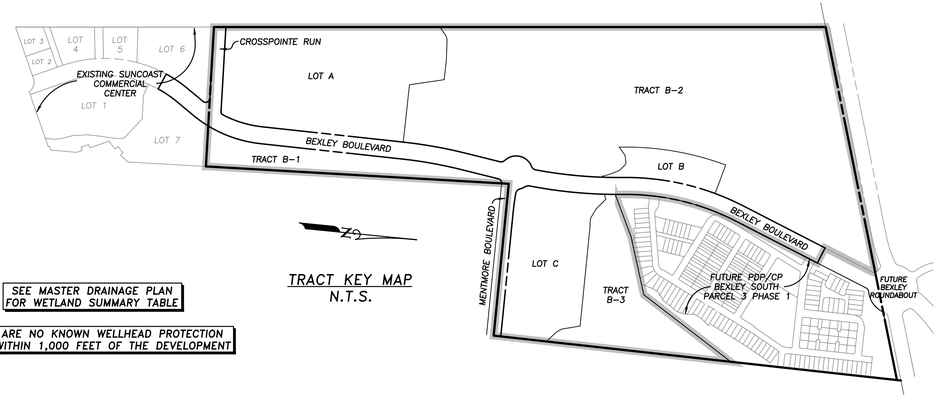

TRACT KEY MAP
N.T.S.

TRACT DESIGNATION TABLE

TRACT ID	DESIGNATION	ACREAGE
TRACT B–1	DRAINAGE AREA; WETLAND CONSERVATION AREA; OPEN SPACE; UTILITY EASEMENT	9.8±
LOT A	FUTURE DEVELOPMENT, WETLAND CONSERVATION AREA, DRAINAGE AREA, UTILITY EASEMENT	34.5±
TRACT B–2	DRAINAGE AREA; WETLAND CONSERVATION AREA; OPEN SPACE; UTILITY EASEMENT	105.2±
LOT B	FUTURE DEVELOPMENT; UTILITY EASEMENT	5.0±
LOT C	FUTURE DEVELOPMENT; UTILITY EASEMENT	18.6±
TRACT B–3	DRAINAGE AREA; WETLAND CONSERVATION AREA; OPEN SPACE; UTILITY EASEMENT	16.9±
PARCEL 3 PHASE 1	FUTURE DEVELOPMENT	47.6±

1. TRACT/LOT ACREAGE IS MORE OR LESS AND SUBJECT TO MINOR CHANGE BASED UPON FINAL DETERMINATION WITH PLATTING.
2. THE PUBLIC RIGHT(S)–OF–WAY WILL BE CONVEYED TO PASCO COUNTY VIA DEED OR PLAT.
3. THE DEVELOPER/OWNER SHALL CONVEY A NON–EXCLUSIVE FLOW THROUGH DRAINAGE EASEMENT TO PASCO COUNTY OVER TRACTS 8, 10 & B–1 (DRAINAGE AREAS) IN ACCORDANCE WITH LDC SECTION 902.2.
4. FUTURE DEVELOPMENT WITHIN LOTS 9, 11 & 12 WILL REQUIRE ADDITIONAL PERMITTING.
5. LANDSCAPE BUFFERS AND BUILDING SETBACKS SHALL BE DETERMINED WITH FUTURE TRACT SITE PLANNING & PERMITTING.

DATE	DESCRIPTION	BY
	REVISIONS	

CLEARVIEW LAND DESIGN, P.L.
Engineering Business C.A. No.: 28858
1213 E. 6th Avenue, Tampa, Florida 33605
Office: 813–223–3919 Fax: 813–223–3975
DATE:
JORDAN A. SCHRADER P.E. NO. 74798
FLORIDA PROFESSIONAL ENGINEER

PRELIMINARY DEVELOPMENT PLAN

JOB NO. NLC–BX–015
DESIGN SMIRCH
DRAWN SMIRCH
DATE 08/28/2014
FILE PDP

BEXLEY BOULEVARD 1ST EXTENSION

PREPARED FOR: NNP-BEXLEY, LLC

Elevations based on North American Vertical Datum 1988 (NAVD 88)
Conversion from NAVD 88 to NGVD 29 = +0.83 Feet

SEE SHEET 6 – PRELIMINARY DEVELOPMENT PLAN

SEE SHEET 4 – PRELIMINARY DEVELOPMENT PLAN

SEE SHEET 7 – PRELIMINARY DEVELOPMENT PLAN

200 100 0 100 200

SCALE: 1" = 100'

LEGEND

EXISTING	PROPOSED	
		STORM DRAINAGE STRUCTURE
10	10	STRUCTURE NO.
+115.0	115.00 OR 115.00	SPOT ELEVATION
115	115.00	CONTOUR
		DIRECTION OF SURFACE FLOW
		STAKED EROSION CONTROL (REPRESENTS THE SWFWMD BUFFER LIMITS WHERE ADJACENT TO A PROTECTED WETLAND)
COEWL		ACOE WETLAND LINE
SWFWMD		SWFWMD WETLAND LINE
25' O.S.		25' OFFSET FROM WETLAND LINE (SHOWN FOR INFORMATIONAL PURPOSES)
ZONE A		1992 FEMA FLOOD ZONE BOUNDARY
C12		WETLAND ID*
CATEGORY I		PASCO WETLAND CATEGORY
C12 SH= 49.80 NP= N/A		SEASONAL HIGH WATER ELEVATION* *TAKEN FROM CURRENT PROJECT APPROVALS
		PROJECT PDP BOUNDARY
		PROPOSED WETLAND IMPACTS

SEE MASTER DRAINAGE PLAN FOR WETLAND SUMMARY TABLE

THERE ARE NO KNOWN WELLHEAD PROTECTION AREAS WITHIN 1,000 FEET OF THE DEVELOPMENT

DATE	DESCRIPTION	BY
	REVISIONS	

CLEARVIEW LAND DESIGN, P.L.
Engineering Business C.A. No.: 28858
1213 E. 6th Avenue, Tampa, Florida 33605
Office: 813-223-3919 Fax: 813-223-3975

DATE:
JORDAN A. SCHRADER P.E. NO. 74798
FLORIDA PROFESSIONAL ENGINEER

PRELIMINARY DEVELOPMENT PLAN

JOB NO. NLC-BX-015	BEXLEY BOULEVARD 1ST EXTENSION
DESIGN SMIRCH	
DRAWN SMIRCH	PREPARED FOR: NNP-BEXLEY, LLC
DATE 08/28/2014	Elevations based on North American Vertical Datum 1988 (NAVD 88) Conversion from NAVD 88 to NGVD 29 = +0.83 Feet
FILE PDP	SHEET 5 OF 46 SHEETS

BLANCO OLGA TRUSTEE
ZONING: AC
FUTURE LAND USE: RES-3
PARCEL ID: 19-26-18-0000-00300-0000

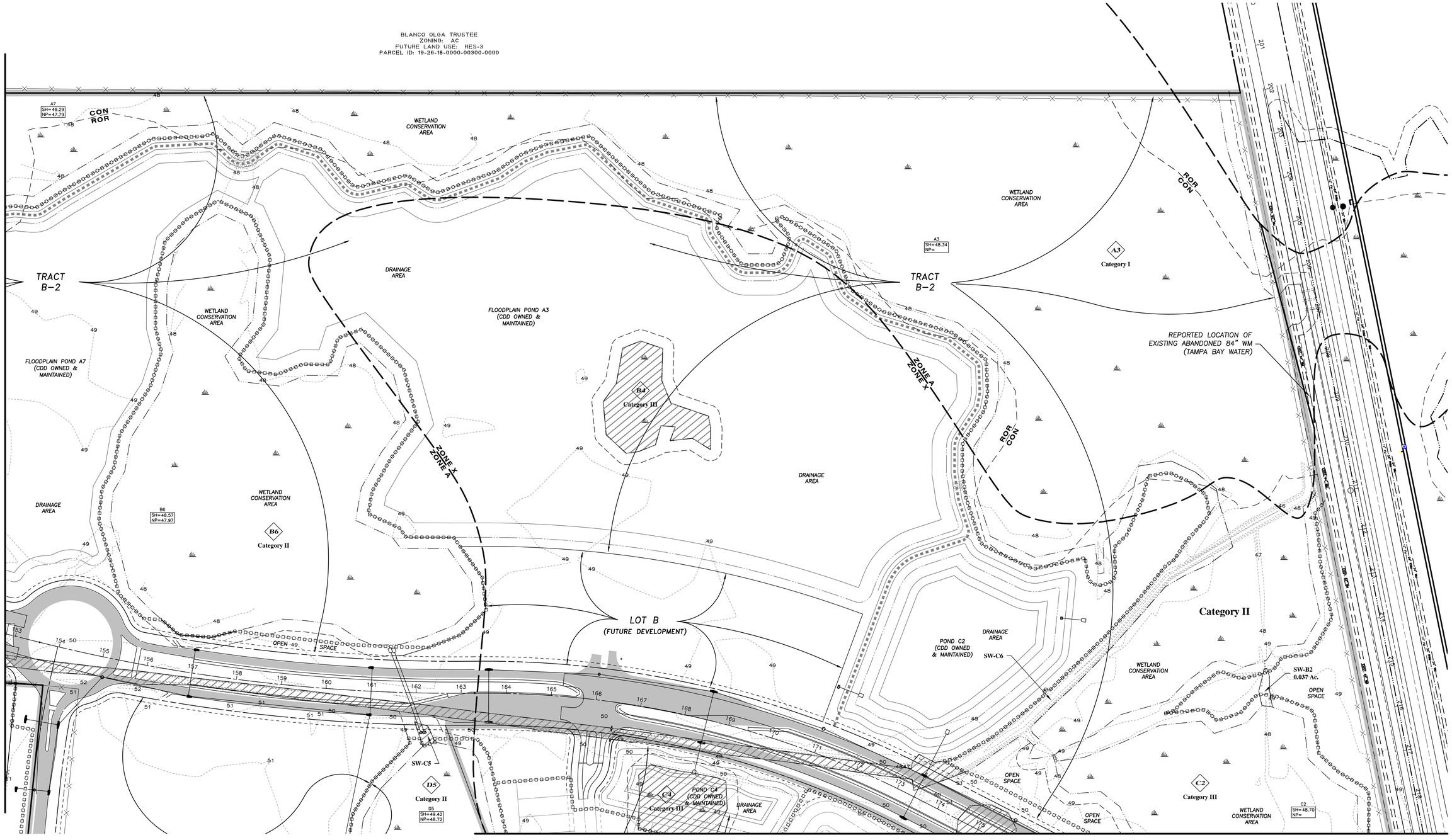

SEE MASTER DRAINAGE PLAN FOR WETLAND SUMMARY TABLE

THERE ARE NO KNOWN WELLHEAD PROTECTION AREAS WITHIN 1,000 FEET OF THE DEVELOPMENT

200 100 0 100 200

SCALE: 1" = 100'

LEGEND

EXISTING	PROPOSED	
		STORM DRAINAGE STRUCTURE
10	10	STRUCTURE NO.
+115.0 115	115.00 OR 115+00	SPOT ELEVATION
	115.00	CONTOUR
		DIRECTION OF SURFACE FLOW
		STAKED EROSION CONTROL (REPRESENTS THE SWFWMD BUFFER LIMITS WHERE ADJACENT TO A PROTECTED WETLAND)
COEWL		ACOE WETLAND LINE
SWFWMD		SWFWMD WETLAND LINE

EXISTING	PROPOSED	
25' O.S.		25' OFFSET FROM WETLAND LINE (SHOWN FOR INFORMATIONAL PURPOSES)
ZONE A		1992 FEMA FLOOD ZONE BOUNDARY
C12		WETLAND ID*
CATEGORY I		PASCO WETLAND CATEGORY
C12 SH=49.80 NP= N/A		SEASONAL HIGH WATER ELEVATION* *TAKEN FROM CURRENT PROJECT APPROVALS
		PROJECT PDP BOUNDARY
		PROPOSED WETLAND IMPACTS

DATE	DESCRIPTION	BY
	REVISIONS	

CLEARVIEW LAND DESIGN, P.L.
Engineering Business C.A. No.: 28858
1213 E. 6th Avenue, Tampa, Florida 33605
Office: 813-223-3919 Fax: 813-223-3975

DATE:
JORDAN A. SCHRADER P.E. NO. 74798
FLORIDA PROFESSIONAL ENGINEER

PRELIMINARY DEVELOPMENT PLAN

JOB NO. NLC-BX-015	BEXLEY BOULEVARD 1ST EXTENSION
DESIGN SMIRCH	
DRAWN SMIRCH	PREPARED FOR: NNP-BEXLEY, LLC
DATE 08/28/2014	Elevations based on North American Vertical Datum 1988 (NAVD 88) Conversion from NAVD 88 to NGVD 29 = +0.83 Feet
FILE PDP	SHEET 6 OF 46 SHEETS

SEE SHEET 6 – PRELIMINARY DEVELOPMENT PLAN

SEE SHEET 5 – PRELIMINARY DEVELOPMENT PLAN

(FUTURE DEVELOPMENT)

POND C2 (CDD OWNED & MAINTAINED)

DRAINAGE AREA

SW-C6

WETLAND CONSERVATION AREA

SW-B2 0.037 Ac.

OPEN SPACE

REPORTED LOCATION OF EXISTING 24" WATER MAIN (PASCO COUNTY)

REPORTED LOCATION OF EXISTING 24" RECLAIMED MAIN (PASCO COUNTY)

REPORTED LOCATION OF EXISTING 12" FORCE MAIN (PASCO COUNTY)

REPORTED LOCATION OF RELOCATED 84" WM (TAMPA BAY WATER)

REPORTED LOCATION OF ABANDONED 84" WM (TAMPA BAY WATER)

C2 Category III

C2 SH=48.70 NP=

POND C4 (CDD OWNED & MAINTAINED)

C4 Category III

DRAINAGE AREA

POND C4 CONSTRUCTION IN THESE PLANS

Category III

BEXLEY BOULEVARD

142' R/W

SW-C3

FUTURE BEXLEY SOUTH PARCEL 3 PHASE 1

ZONE X

ZONE A

DRAINAGE AREA

FLOODPLAIN POND C2 (CDD OWNED & MAINTAINED)

END PAVEMENT & CURB CONSTRUCTION FOR THIS PROJECT. FUTURE BEXLEY ROUNDABOUT SHALL MATCH PAVEMENT AND COMMENCE FROM THIS LOCATION.

SW-D4

SW-D2

FUTURE BEXLEY ROUNDABOUT

WETLAND CONSERVATION AREA

D3 SH= 50.6 NP=49.94

D3 Category III

D1 Category III

FUTURE BEXLEY SOUTH PARCEL 3 PHASE 1

TRACT B-3

E4 Category II

WETLAND CONSERVATION AREA

CROSS EASEMENT FOR DRAINAGE O.R. BK 5053, PG 329-338

DRAINAGE AREA

FLOODPLAIN POND D1 (CDD OWNED & MAINTAINED)

FUTURE TOWER ROAD

EXISTING CHAIN LINK FENCE

FLOOD POND D1 CONSTRUCTION IN THESE PLANS

EXIST. BARBED WIRE FENCE

TRACT B-3

WETLAND CONSERVATION AREA

EXISTING 12" GRAVITY SEWER TO REMAIN

20.00

EXISTING 12" GRAVITY SEWER TO REMAIN

SUNCOAST POINTE VILLAGES 2A, 2B, AND 3 P.B. 58, PG 31-38

ZONE A

ZONE X

BELLERICAY LN 24' ASPHALT 50' PASCO R/W

EXIST. 6" WM

ENTRYWAY EASEMENT (O.R. BK 5458, PAGE 1723–1751) AND PASCO COUNTY SEWER EASEMENT (O.R. BK 7796, PAGE 745–751)

LIXBERRY WAY 20' ASPHALT 50' PASCO R/W

EXISTING SUNCOAST POINTE MASTER PUMP STATION

SUNCOAST POINTE VILLAGES 2A, 2B, AND 3 P.B. 58, PG 31-38

200 100 0 100 200

SCALE: 1" = 100'

LEGEND

EXISTING	PROPOSED	
		STORM DRAINAGE STRUCTURE
10	10	STRUCTURE NO.
+115.0	+115.00 OR 115.00	SPOT ELEVATION
115	115.00	CONTOUR
		DIRECTION OF SURFACE FLOW
		STAKED EROSION CONTROL (REPRESENTS THE SWFWMD BUFFER LIMITS WHERE ADJACENT TO A PROTECTED WETLAND)
COEWL		ACOE WETLAND LINE
SWFWMD		SWFWMD WETLAND LINE
25' O.S.		25' OFFSET FROM WETLAND LINE (SHOWN FOR INFORMATIONAL PURPOSES)
ZONE A		1992 FEMA FLOOD ZONE BOUNDARY
C12		WETLAND ID*
CATEGORY I		PASCO WETLAND CATEGORY
C12 SH=49.80 NP= N/A		SEASONAL HIGH WATER ELEVATION* *TAKEN FROM CURRENT PROJECT APPROVALS
		PROJECT PDP BOUNDARY
		PROPOSED WETLAND IMPACTS

SEE MASTER DRAINAGE PLAN FOR WETLAND SUMMARY TABLE

THERE ARE NO KNOWN WELLHEAD PROTECTION AREAS WITHIN 1,000 FEET OF THE DEVELOPMENT

DATE	DESCRIPTION	BY
	REVISIONS	

CLEARVIEW LAND DESIGN, P.L.
Engineering Business C.A. No.: 28858
1213 E. 6th Avenue, Tampa, Florida 33605
Office: 813-223-3919 Fax: 813-223-3975

DATE:
JORDAN A. SCHRADER P.E. NO. 74798
FLORIDA PROFESSIONAL ENGINEER

PRELIMINARY DEVELOPMENT PLAN

JOB NO. NLC-BX-015

DESIGN SMIRCH

DRAWN SMIRCH

DATE 08/28/2014

FILE PDP

BEXLEY BOULEVARD 1ST EXTENSION

PREPARED FOR: NNP-BEXLEY, LLC

Elevations based on North American Vertical Datum 1988 (NAVD 88)
Conversion from NAVD 88 to NGVD 29 = +0.83 Feet

THE FOLLOWING LEGAL DESCRIPTION REPRESENTS NNP-BEXLEY, LLC OWNERSHIP FROM STATE ROAD 54 TO TOWER ROAD. REFER TO BOUNDARY SURVEY BY GEOPOINT SURVEYING, INC. INCREMENTAL PHASE LEGAL DESCRIPTION(S) WILL BE DETERMINED AT THE TIME OF FINAL PLAT.

THE LAND REFERRED TO HEREIN BELOW IS SITUATED IN THE COUNTY OF Pasco, STATE OF FL, AND IS DESCRIBED AS FOLLOWS:

Parcel 1: Residential Parcel

A parcel of land lying in Sections 19 and 30, Township 26 South, Range 18 East, Pasco County, Florida, being more particularly described as follows:

Commence at the Southeast corner of Section 19, Township 26 South, Range 18 East, Pasco County, Florida; run thence N00°35'31"E, along the East boundary of said Section 19, a distance of 668.75 feet to the Point of Beginning; thence along the East, North and West boundaries of those lands described in Official Record Book 1969, Page 1445, of the public records of Pasco County, Florida by the following four (4) courses: (1) N00°36'12"E, a distance of 1999.20 feet to the Northeast corner of the Southeast 1/4 of said Section 19, (2) N00°35'46"E, a distance of 1402.70 feet to a found concrete monument on the South boundary of S.C.L. Railroad right-of-way, (3) S72°53'46"W, a distance of 3020.44 feet along said right of way, (4) S05°41'24"E, a distance of 5129.33 feet; thence departing said boundary, N87°35'31"E, 1170.88 feet to a point of intersection with the East boundary of said lands described in Official Record Book 1969, Page 1445; thence along said East boundary by the following two (2) courses: (1) N02°24'20"W, a distance of 2543.51 feet, (2) N89°59'26"E, a distance of 1279.57 feet to the Point of Beginning.

Parcel 2: Collector Road Easement Parcel

All right, title and interest of Entryway Developers, LLC, in Grant of Non-Exclusive Easement recorded in Official Records Book 5053, Page 350, as amended by Amendment to Grant of Non-Exclusive Easement recorded in Official Records Book 5225, Page 48, as further amended in Second Amendment to Grant of Non-Exclusive Easement recorded in Official Records Book 5629, Page 165, all of the public records of Pasco County, Florida, over the following described property:

Commence at the Southeast corner of Section 19, Township 26 South, Range 18 East, Pasco County, Florida; run thence N00°35'31"E, along the East boundary of said Section 19, a distance of 668.75 feet; thence along the East, North and West boundaries of those lands described in Official Record Book 1969, Page 1445, of the public records of said Pasco County by the following four (4) courses: (1) N00°36'12"E, a distance of 1999.20 feet to the Northeast corner of the Southeast 1/4 of said Section 19, (2) N00°35'46"E, a distance of 1402.70 feet to a found concrete monument on the South boundary of S.C.L. Railroad right of way, (3) S72°53'46"W, a distance of 3020.44 feet along said right of way, (4) S05°41'24"E, a distance of 6792.34 feet to a point of intersection with the North right of way of State Road 54 – Parcel 108 as recorded in Official Record Book 3814, Page 1328, of the public records of said Pasco County; thence along said right of way, N65°12'22"E, a distance of 446.02 feet to the point of beginning; thence departing said North right of way, along the arc of a curve to the right, concave Easterly, thence 75.00 feet along the arc of said curve, having a radius of 1250.00 feet, a central angle of 03°26'16", a chord bearing of N19°50'41"W, a chord distance of 74.99 feet; thence S30°08'56"W a distance of 10.72 feet; thence N24°47'38"W a distance of 194.62 feet to a point of curve to the right, concave Easterly; thence 1,189.12 feet along the arc of said curve, having a radius of 1,075.00 feet, a central angle of 63°22'41", a chord bearing of N06°53'42"E, a chord distance of 1,129.41 feet; thence N38°35'03"E a distance of 97.31 feet to a point of curve to the left, concave Northwesterly; thence 76.82 feet along the arc of said curve, having a radius of 955.00 feet, a central angle of 04°36'31", a chord bearing of N36°16'47"E, a chord distance of 76.80 feet to the North line of Parcel "A"; thence N87°35'31"E along said North line a distance of 144.79 feet to a point on a non tangent curve to the right, concave Northwesterly; thence 172.45 feet along the arc of said curve, having a radius of 1,075.00 feet, a central angle of 09°11'28", a chord bearing of S33°59'19"W, a chord distance of 172.26 feet; thence S38°35'03"W a distance of 97.31 feet to a point of curve to the left, concave Easterly; thence 1,056.38 feet along the arc of said curve, having a radius of 955.00 feet, a central angle of 63°22'41", a chord bearing of S06°53'42"W, a chord distance of 1,003.34 feet; thence S24°47'38"E a distance of 189.37 feet; thence S59°41'44"E a distance of 14.20 feet to a point on a non tangent curve to the left concave Northeasterly; thence 132.46 feet along the arc of said curve, having a radius of 1,130.00 feet, a central angle of 06°42'58", a chord bearing of S21°24'49"E, a chord distance of 132.38 feet to said North right of way; thence along said right of way S65°12'22"W a distance of 13.79 feet to a point on a non tangent curve to the left, concave Southwesterly; thence continuing along said right of way 125.01 feet along the arc of said curve, having a radius of 97.00 feet, a central angle of 73°50'18", a chord bearing of N77°52'30"W, a chord distance of 116.53 feet; thence S65°12'22"W a distance of 11.05 feet to the Point of Beginning.

Together with:

The following parcel known as the "Collector Road Drainage Easement Parcel":

A parcel of land lying in Section 30, Township 26 South, Range 18 East, Pasco County, Florida and being more particularly described as follows:

Commence at the Southeast corner of Section 19, Township 26 South, Range 18 East; run thence N00°35'31"E along the East boundary of said Section 19, a distance of 668.75 feet to a point on the Southerly boundary of those lands described as the "Residential Parcel" in Official Record Book 5053, Page 345, of the public records of Pasco County, Florida; thence along the Southerly and Easterly boundaries of said "Residential Parcel" by the following three (3) courses: (1) S89°59'26"W, a distance of 1,279.57 feet, (2) S02°24'20"E, a distance of 2,543.51 feet, (3) S87°35'31"W, a distance of 289.81 feet to the Point of Beginning; thence departing said boundary, S09°54'27"W, a distance of 351.48 feet; thence N90°00'00"W, a distance of 218.03 feet to a point of intersection with the Easterly boundary of those lands described as amended Exhibit "C" in Official Record Book 5225, Page 48, of the public records of Pasco County, Florida, said point being a point on the arc of a curve; thence along said Easterly boundary by the following three (3) courses: (1) 151.96 feet along the arc of said curve through a central angle of 09°07'00", said curve being concave to the Southeast and having a radius of 955.00 feet subtended by a chord bearing N34°01'33"E, 151.80 feet, (2) N38°35'03"E, a distance of 97.31 feet to a point of curvature, (3) 172.45 feet along the arc of a curve through a central angle of 09°11'28", said curve being concave to the Northwest and having a radius of 1,075.00 feet subtended by a chord bearing N33°59'19"E, 172.26 feet to a point on the aforementioned Southerly boundary of the "Residential Parcel"; thence N87°35'31"E along the South boundary of said "Residential Parcel", a distance of 36.61 feet to the Point of Beginning.

Less and except from the foregoing described Parcel 2 the West Entrance Parcel, legally described as follows:

A parcel of land lying in Section 30, Township 26 South, Range 18 East, Pasco County, Florida, being more particularly described as follows:

Commence at the Southeast corner of Section 19, Township 26 South, Range 18 East, Pasco County, Florida; run thence N00°35'31"E, along the East boundary of said Section 19, a distance of 668.75 feet; thence along the East, North and West boundaries of those lands described in Official Record Book 1969, Page 1445, of the public records of said Pasco County by the following four (4) courses: (1) N00°36'12"E, a distance of 1999.20 feet to the Northeast corner of the Southeast 1/4 of said Section 19, (2) N00°35'46"E, a distance of 1402.70 feet to a found concrete monument on the South boundary of S.C.L. railroad right of way, (3) S72°53'46"W, a distance of 3020.44 feet along said right of way, (4) S05°41'24"E, a distance of 6792.34 feet to a point of intersection with the North right of way of State Road 54 – Parcel 108 as recorded in Official Record Book 3814, Page 1328, of the public records of said Pasco County; thence along said right of way, N65°12'22"E, a distance of 346.02 feet to the Point of Beginning; thence departing said right-of-way, N30°08'56"E, for 130.07 feet to a point on a curve; thence 75.00 feet along the arc of said curve concave Northeasterly, having a radius of 1250.00 feet, a central angle of 3°26'16", a chord bearing S19°50'41"E and a chord distance of 74.99 feet, to a point on the aforementioned right of way; thence S65°12'22"W, for 100.00 feet along said right-of-way to the Point of Beginning.

And also less and except from the foregoing described Parcel 2 the following described parcel known as the "Additional Access Area":

A parcel of land lying within Section 30, Township 26 South, Range 18 East, being a portion of those lands described as "West Entry Parcel" in Official Record Book 5053, Page 345, of the public records of Pasco County, Florida and being more particularly described as follows:

Commence at the Southeast corner of Section 19, Township 26 South, Range 18 East, Pasco County, Florida; run thence N00°35'31"E, along the East boundary of said Section 19, a distance of 668.75 feet; thence along the East, North and West boundaries of those lands described in Official Record Book 1969, Page 1445, of the public records of said Pasco County by the following four (4) courses: (1) N00°36'12"E, a distance of 1999.20 feet to the Northeast corner of the Southeast 1/4 of said Section 19, (2) N00°35'46"E, a distance of 1402.70 feet to a found concrete monument on the South boundary of S.C.L. railroad right of way, (3) S72°53'46"W, a distance of 3020.44 feet along said right of way, (4) S05°41'24"E, a distance of 6792.34 feet to a point of intersection with the North right of way of State Road 54 – Parcel 108 as recorded in Official Record Book 3814, Page 1328, of the public records of said Pasco County; thence departing said right of way, N24°47'38"W a distance of 68.55 feet to a point of intersection with the Northerly boundary of those lands described as the West Entrance Parcel in Offical Record Book 5053, Page 345, of the public records of said Pasco County; thence N30°08'56"E a distance of 10.72 feet to the Northeast corner of said West Entrance Parcel; thence 75.00 feet along the East boundary of said West Entrance Parcel by the arc of a curve, concave Northeasterly, having a radius of 1250.00 feet, a central angle of 3°26'16", a chord bearing of S19°50'41"E, and a chord distance of 74.99 feet to the Southeast corner of said parcel; thence S65°12'22"W along the South boundary of said parcel a distance of 2.31 feet to the Point of Beginning.

Parcel 3: East Entrance Parcel

A parcel of land lying in Section 30, Township 26 South, Range 18 East, Pasco County, Florida, being more particularly described as follows:

Commence at the Southeast corner of Section 19, Township 26 South, Range 18 East, Pasco County, Florida; run thence N00°35'31"E, along the East boundary of said Section 19, a distance of 668.75 feet; thence along the East, North and West boundaries of those lands described in Official Record Book 1969, Page 1445, of the public records of said Pasco County, by the following four (4) courses: (1) N00°36'12"E, a distance of 1999.20 feet to the Northeast corner of the Southeast 1/4 of said Section 19, (2) N00°35'46"E, a distance of 1402.70 feet to a found concrete monument on the South boundary of S.C.L. Railroad right of way, (3) S72°53'46"W, a distance of 3020.44 feet along said right of way, (4) S05°41'24"E, a distance of 6792.34 feet to a point of intersection with the North right of way of State Road 54 – Parcel 108 as recorded in Official Record Book 3814, Page 1328, of the public records of said Pasco County; thence along said right of way, N65°12'22"E, a distance of 457.08 feet to a point of curvature; thence Southeasterly, 125.01 feet along the arc of a curve concave Southerly, having a radius of 97.00 feet, a central angle of 73°50'17" and a chord bearing S77°52'30"E, a distance of 116.53 feet to the Southeast corner of said Parcel 108, said point being located on the North right of way line of State Road 54 per State of Florida State Road Department right of way Map Section No. 1457-250; thence along said right-of-way, N65°12'22"E, a distance of 13.79 feet to the Point of Beginning; thence continuing along said right of way line, N65°12'22"E, a distance of 100.00 feet; thence departing said right of way line, N59°41'44"W, a distance of 161.13 feet to a point on the arc of a curve; thence 132.46 feet along the arc of said curve, concave Northeasterly having a radius of 1130.00 feet, a central angle of 6°42'58", and a chord which bears S21°24'50"E, a distance of 132.38 feet to the Point of Beginning.

Together with the following described parcel known as the "Additional Benefited Area" legally described as follows:

A parcel of land lying within Section 30, Township 26 South, Range 18 East, being a portion of those lands described as "Amended Exhibit C" in Official Record Book 5225, Page 48, of the public records of Pasco County, Florida and being more particularly described as follows:

Commence at the Southeast corner of Section 19, Township 26 South, Range 18 East, Pasco County, Florida; run thence N00°35'31"E, along the East boundary of said Section 19, a distance of 668.75 feet; thence along the East, North and West boundaries of those lands described in Official Record Book 1969, Page 1445, of the public records of said Pasco County, by the following four (4) courses: (1) N00°36'12"E, a distance of 1999.20 feet to the Northeast corner of the Southeast 1/4 of said Section 19, (2) N00°35'46"E, a distance of 1402.70 feet to a found concrete monument on the South boundary of S.C.L. Railroad right of way, (3) S72°53'46"W, a distance of 3020.44 feet along said right of way, (4) S05°41'24"E, a distance of 6792.34 feet to a point of intersection with the North right of way of State Road 54 – Parcel 108 as recorded in Official Record Book 3814, Page 1328, of the public records of said Pasco County; thence along said right of way, N65°12'22"E, a distance of 457.08 feet; thence continuing along said right of way 125.01 feet along the arc of a curve, concave Southwesterly, having a radius of 97.00 feet, a central angle of 73°50'17", a chord bearing of S77°52'30"E, and a chord distance of 116.53 feet; thence N65°12'22"E continuing along said right of way a distance of 13.47 feet to the point of beginning; thence departing said right of way, N24°47'38"W a distance of 143.80 feet; thence S59°41'44"E a distance of 14.20 feet to the Northern-most corner of those lands described as the "East Entrance Parcel" in Official Record Book 5053, Page 345, of the public records of said Pasco County; thence 132.46 feet along the West boundary of said parcel by the arc of a curve, concave Northeasterly, having a radius of 1,130.00 feet, a central angle of 6°42'58", a chord bearing of S21°24'50"E, and a chord distance of 132.38 feet to the Southwest corner of said parcel, said point being located on the Northerly right-of-way of State Road 54 (Section No. 1457-250); thence S65°12'22"W along said right of way a distance of 0.32 feet to the Point of Beginning.

Parcel 4: Sanitary Sewer Easement

All right, title and interest of Entryway Developers, LLC, in the Non-Exclusive Easements described in Sanitary Sewer Facilities Construction and Easement Agreement recorded in Official Records Book 5458, Page 1723, of the public records of Pasco County, Florida, over the real property described therein.

INTERSECTION CLEAR SIGHT REQUIREMENTS:

1. Local Intersections shall remain unobstructed per "Typical Clear Sight Triangle Detail" and FDOT Index 546 "Window Detail" shown below.

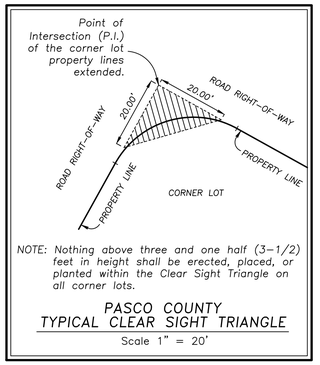

NOTE: Nothing above three and one half (3-1/2) feet in height shall be erected, placed, or planted within the Clear Sight Triangle on all corner lots.

PASCO COUNTY
TYPICAL CLEAR SIGHT TRIANGLE
Scale 1" = 20'

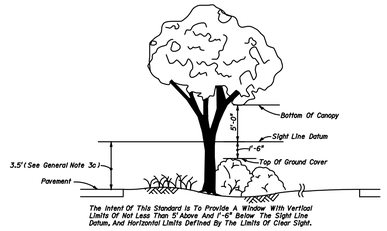

PICTORIAL
WINDOW DETAIL

PRELIMINARY PLAN NOTES:

1. Owner/Developer: NNP-Bexley, LLC
   777 S. Harbour Island Boulevard, Suite 320
   Tampa, FL. 33602
   (813) 620-3555
2. Engineer: Clearview Land Design, P.L.
   1213 E. 6th Ave.
   Tampa, Florida 33605
   (813) 223-3919
3. Surveyor: GeoPoint Surveying, Inc.
   1403 E. 5th Ave.
   Tampa, Florida 33605
   (813) 248-8888
4. Existing Zoning: MPUD Petition No. 6997 (Current Approval 01-24-2012; Currently Pending Review)
5. Existing Land Use: Vacant/Agricultural
6. Future Land Use Classification: ROR & CON
7. Water service to be provided by Pasco County Utilities.
8. Sewage disposal service to be provided by Pasco County Utilities.
9. Electrical power to be provided by Duke Energy.
10. Telephone service to be provided by Verizon & Brighthouse.
11. Street lighting to be provided by Duke Engergy.
12. Fire protection to be provided by the existing Pasco County Fire Station No. 37. located on SR 54 approximately 1.5 miles from the project entrance. Fire Hydrants will be provided on-site.
13. The uplands are pasture. The wetlands are cypress heads and grass marshes.
14. Predominant soil types on-site consist of Pineda, Myakka, Sellers and Eaugallie Fine Sands.
15. Recreation areas, conservation areas, and detention ponds will be owned and maintained by the CDD unless otherwise noted.
16. Detention ponds to be within tracts dedicated to the Community Development District for maintenance unless otherwise noted.
17. Contours shown are based on North American Vertical Datum (NAVD88).
18. Proposed rights-of-way for local streets shall be a minimum of fifty (50) feet.
19. All roadway standards to comply with the Manual of Uniform Minimum Standards, State of Florida.
20. All water and wastewater facilities to be installed in compliance with Pasco County Standards for design and construction of water and wastewater facilities.
21. All utility lines shall be installed underground.
22. The site appears to lie within Flood Zone "A" & "X" according to Federal Emergency Management Agency (FEMA) – Flood Insurance Rate Map (FIRM) Community-Panel No. 120230 0400 D, revised September 30, 1992. Flood Zone determination based on data digitally translated from Q3 FLOOD DATA supplied by FEMA NFIP, dated 1996.2.
    STUDY UNDERWAY: FEMA Map revisions are pending as of April 29, 2014 based on the detailed flood study commissioned by the SWFWMD and Pasco County and prepared by Atkins. Draft Flood map data are available at the following URL: http://pascoview.pascocountyfl.net/FEMA_Viewer/.
23. A minimum of 16" of sod strip will be provided along all roadways per Pasco County requirements.
24. Setbacks from post-developed wetlands shall be as follows: 25-foot minimum around all Category I Wetlands; Buffers around Category II and Category III Wetlands shall be as required by SWFWMD. Allowable uses and restrictions for buffers shall be in accordance with Section 805 of the Pasco County Land Development Code.
25. Sidewalks will be provided on both sides of all roads including non-lot areas. Unless otherwise shown, all sidewalks shall be five (5) feet wide, 4" thick concrete, and 3000 p.s.i., fiber-reinforced. Sidewalks shall be constructed on a compacted non-yielding subgrade, and 6" in thickness is required where sidewalk is crossed by a driveway.
26. Buffering for all retention/detention areas along road right-of-ways to have trees selected from tree list at the rate of one tree per 50 L.F.
27. All landscape and sodded areas along collector road will be irrigated and maintained by the CDD or an entity other than Pasco County.
28. This project will comply with the Pasco County Tree Protection and Restoration Ordinance.
29. All construction work, including road, drainage and utilities, shall be constructed in accordance with Pasco County design standards and tested in compliance with the Pasco County Engineering Service Department Testing Specifications for construction of roads, storm drainage and utilities.
30. If prehistoric artifacts such as pottery or ceramics, stone tools or metal implements, or any other physical remains that could be associated with Native American cultures, or early colonial or American settlement are encountered at any time, the project should cease all activities involving subsurface disturbance in the immediate vicinity of such discoveries. The applicant, or designee, should contact the Florida Department of State, Division of Historical Resources, Compliance and Review Section at 850.245.6333, as well as the appropriate funding agency office. Project activities should not resume without verbal and/or written authorization from the Division of Historical Resources.
31. In the event that unmarked human remains are encountered during permitted activities, all work must stop immediately and the proper authorities notified in accordance with Section 872.05, Florida Statue.
32. All proposed signs must be applied for, approved, and permitted on an individual basis apart from any ultimately-approved site plan. Approval of this site plan does not constitute approval of any signage.
33. All clear-site areas shall be kept free of any signage plantings, trees, etc. in excess of three-and-a-half (3-1/2) feet in height.
34. No irrigation system or landscaping shall be installed in any County or State right-of-way without issuance of appropriate Right-of-way Use Permit.
35. Fugitive dust emissions shall be controlled by sprinkling as necessary.
36. On-site burning shall not be employed without approval from the Fire Marshall.
37. The soil erosion and sediment control devices shall be installed prior to construction, maintained throughout construction and until the site is permanently stabilized.
38. All driveway cuts shall be installed to local streets.
39. The CDD will be responsible for maintenance of the underdrain system.
40. Maintenance of sidewalk shall be the responsibility of the CDD or an entity other than Pasco County.
41. Drainage tracts/easements shall be conveyed to the CDD by plat. The easements will be required to be given to Pasco County, for the right but not the obligation to maintain. Maintenance responsibility will be that of the CDD.
42. In consideration of Pasco County's agreement to provide potable water and/or reclaimed water to the subject property, Developer/Owner, and its successors and assigns, agree to the following:
    (a) In the event of Production Failure or Shortfall by Tampa Bay Water, as set forth in section 3.19 of the Interlocal Agreement creating Tampa Bay Water, Developer/Owner shall transfer to Pasco County any and all water use permits or water use rights the Developer/Owner may have to use or consume surface or ground water within Pasco County.
    (b) Prior to Developer/Owner selling water or water use permits or water use rights, Developer/Owner shall notify Pasco County, and Pasco County shall have a right of first refusal to purchase such water or water use permits or water use rights.
43. The Developer will grant, convey, warrant and dedicate to the County via plat a Non-Exclusive Flow through Easement and reasonable right of access to ensure the free flow of water for general public drainage purposes over, through and under all drainage easements/areas or commonly owned property shown on this plat. In the event the Owner, the District or the Association fails to properly maintain any public or private drainage easements/areas preventing the free flow of water, the County shall have the reasonable right, but not the obligation, to access and enter upon any public or private drainage easement/area for the purpose of performing maintenance to ensure the free flow of water.
44. As applicable, the Owner/Developer will provide copies of the required permits from the respective agencies prior to the issuance of the SDP.
45. All work within the County ROW will require a ROW Use Permit.
46. Standard Fire Protection Notes:
    a. All projects must comply with Pasco County Fire Hydrant Ordinance No. 46-51.
    b. Fire hydrants shall be installed and in service prior to the accumulation of combustibles.
    c. Per the National Fire Protection Association, NFPA-1, 16.4.3.1.3: Where underground water mains and hydrants are to be provided, they shall be installed, completed, and in service prior to construction work.
    d. Per NFPA-1, 18.3.4.1: Clearances of 7 1/2 feet in front of and to the sides of the fire hydrant with a 4-foot clearance to the rear must be maintained at all times.
    e. Gated entries require a Siren Operating System or a 3M Opticom system for emergency access.

DATE	DESCRIPTION	BY
	REVISIONS	

CLEARVIEW LAND DESIGN, P.L.
Engineering Business C.A. No.: 28858
1213 E. 6th Avenue, Tampa, Florida 33605
Office: 813-223-3919 Fax: 813-223-3975

DATE:
JORDAN A. SCHRADER P.E. NO. 74798
FLORIDA PROFESSIONAL ENGINEER

PRELIMINARY DEVELOPMENT PLAN

JOB NO. NLC-BX-015	BEXLEY BOULEVARD 1ST EXTENSION
DESIGN SMIRCH	
DRAWN SMIRCH	PREPARED FOR: NNP-BEXLEY, LLC
DATE 08/28/2014	Elevations based on North American Vertical Datum 1988 (NAVD 88) Conversion from NAVD 88 to NGVD 29 = +0.83 Feet
FILE PDP	SHEET 8 OF 46 SHEETS

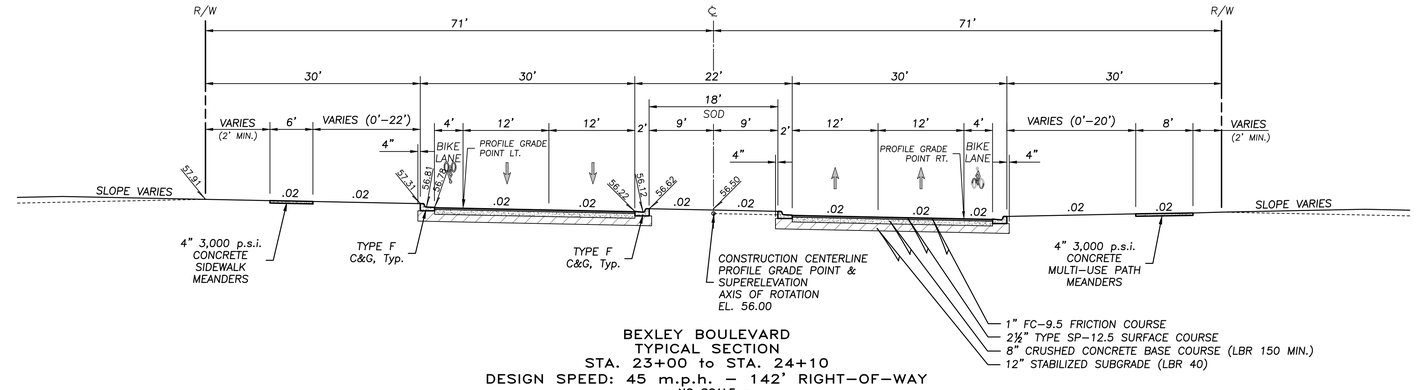

BEXLEY BOULEVARD
TYPICAL SECTION
STA. 23+00 to STA. 24+10
DESIGN SPEED: 45 m.p.h. – 142' RIGHT–OF–WAY
– NO SCALE –

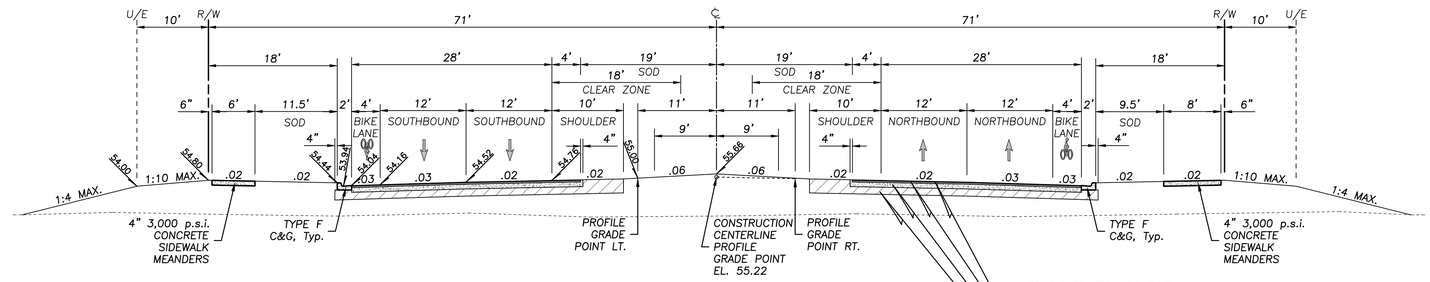

BEXLEY BOULEVARD
TYPICAL SECTION
STA. 134+00 to STA. 150+75
DESIGN SPEED: 45 m.p.h. – 142' RIGHT–OF–WAY
– NO SCALE –

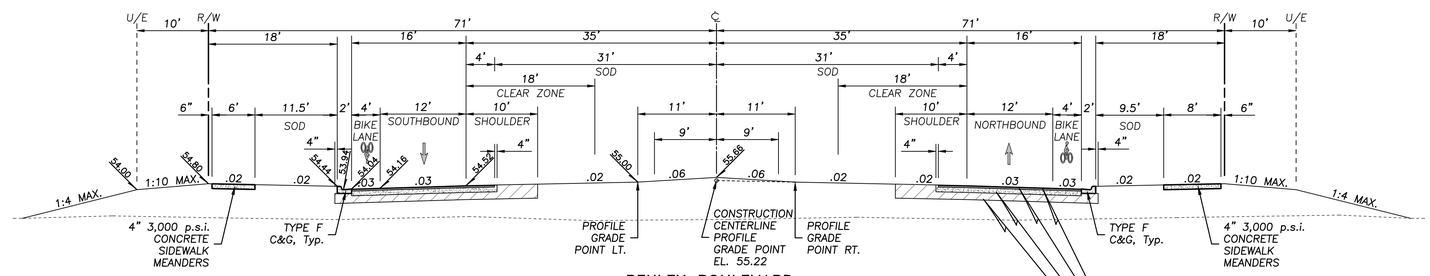

BEXLEY BOULEVARD
TYPICAL SECTION
STA. 157+00 to STA. 181+13.96
DESIGN SPEED: 45 m.p.h. – 142' RIGHT–OF–WAY
– NO SCALE –

ALL CONCRETE SIDEWALK SHALL BE FIBERMESH–REINFORCED

ALL SIDEWALK CROSSING DRIVEWAYS AND ALL SIDEWALKS ADJACENT TO PONDS SHALL BE 6" THICK

Contractor may propose alternate pavement designs. Contractor shall submit any pavement alternatives to Engineer for approval prior to final subgrade preparations.

DATE	DESCRIPTION	BY
	REVISIONS	

CLEARVIEW LAND DESIGN, P.L.
Engineering Business C.A. No.: 28858
1213 E. 6th Avenue, Tampa, Florida 33605
Office: 813–223–3919 Fax: 813–223–3975
DATE:
JORDAN A. SCHRADER P.E. NO. 74798
FLORIDA PROFESSIONAL ENGINEER

TYPICAL ROADWAY SECTIONS

JOB NO. NLC–BX–015	BEXLEY BOULEVARD 1ST EXTENSION
DESIGN SMIRCH	
DRAWN SMIRCH	PREPARED FOR: NNP-BEXLEY, LLC
DATE 08/28/2014	Elevations based on North American Vertical Datum 1988 (NAVD 88) Conversion from NAVD 88 to NGVD 29 = +0.83 Feet
FILE RS	SHEET 9 OF 46 SHEETS

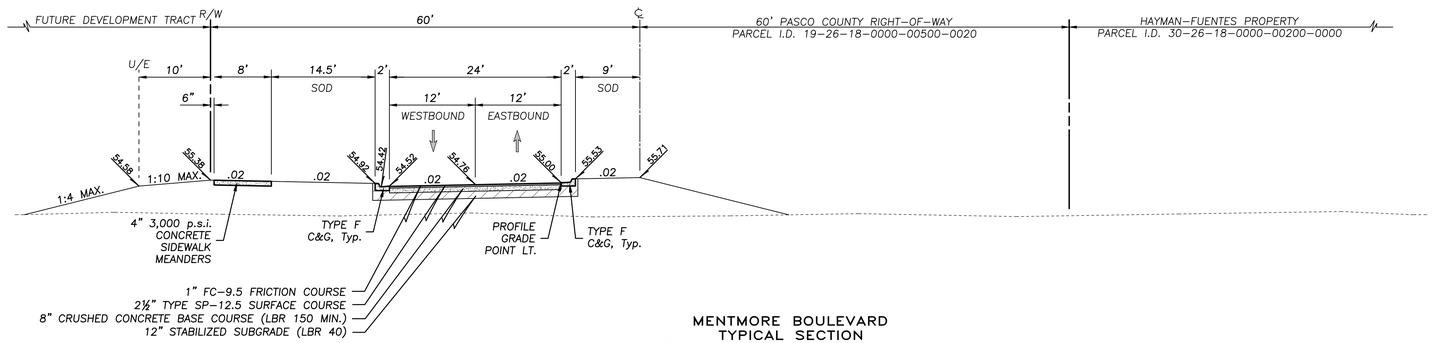

MENTMORE BOULEVARD
TYPICAL SECTION
STA. 14+00 to STA. 23+68.95
DESIGN SPEED: 35 m.p.h. – 120' RIGHT-OF-WAY
– NO SCALE –

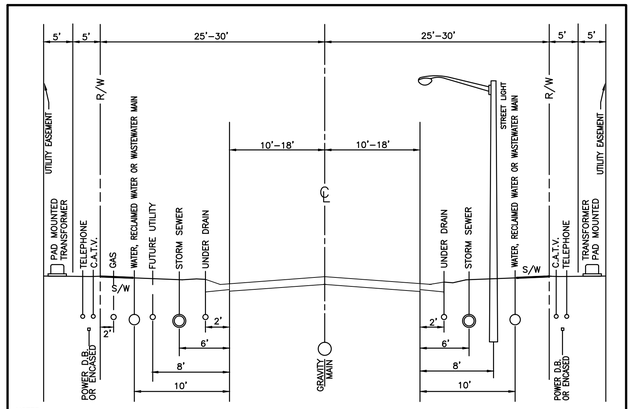

NOTES:
1. DEPTH OF COVER SHALL BE IN ACCORDANCE WITH THE REQUIREMENTS OF THE RESPECTIVE UTILITIES.
2. WREC WILL USE THE BACK ±5' WITHIN THE UTILITY EASEMENT. TECO & DUKE ENERGY WILL USE THE FRONT ±5' FEET.

RECOMMENDED UTILITY LOCATIONS
SCALE: N.T.S.

Proposed Pavement Structure

Layer Coefficients	Thickness
0.44 – Type FC-9.5 Friction Course	1"
0.44 – Type SP-9.5 Surface Course	2 1/2"
0.15 – Crushed Concrete Base (LBR 150 min.)	8"
0.08 – Stabilized Subgrade (LBR 40 min.)	12"

SN = (0.44) (1) + (0.44) (2.5) + (0.15) (8) + (0.08) (12) = 3.70

Alternate Pavement Structure

Layer Coefficients	Thickness
0.44 – Type FC-9.5 Friction Course	1"
0.44 – Type SP-9.5 Surface Course	2 1/2"
0.15 – Soil Cement Base (300 p.s.i. min.)	12"
0.04 – Stabilized Subgrade (LBR 20)	12"

SN = (0.44) (1) + (0.44) (2.5) + (0.15) (12) + (0.04) (12) = 3.82

CONTRACTOR MAY PROPOSE ALTERNATE PAVEMENT DESIGNS. CONTRACTOR SHALL SUBMIT ANY PAVEMENT ALTERNATIVES TO ENGINEER FOR APPROVAL PRIOR TO FINAL SUBGRADE PREPARATIONS.

ALTERNATE PAVEMENT CONSTRUCTION NOTES (SOIL CEMENT)

1. *SUBGRADE UNDER A SOIL-CEMENT BASE SHALL BE PROOF-ROLLED TO GRADE, AS DIRECTED BY THE ENGINEER AND APPROVED BY THE ENGINEER WITH SUITABLE COMPACTION EQUIPMENT TO ACHIEVE A DENSITY OF NINETY-EIGHT (98%) PERCENT MODIFIED PROCTOR FOR A DEPTH OF TWELVE (12) INCHES PRIOR TO PLACING SOIL-CEMENT BASE.*
2. *SOIL-CEMENT MIX DESIGN SHALL BE PROVIDED A MINIMUM 30 DAYS IN ADVANCE OF PLACEMENT OF BASE MATERIAL FOR APPROVAL BY THE ENGINEER. THE SOIL-CEMENT PRODUCT SHALL BE IN ACCORDANCE WITH FCA STANDARDS. 300 P.S.I. MINIMUM.*
3. *SOIL-CEMENT SURFACE SHALL BE INSPECTED AND APPROVED BY THE ENGINEER PRIOR TO ANY PAVING OPERATION.*

ALL CLEAR ZONES SHALL BE FREE OF ANY OBSTRUCTIONS.
SEE CLEAR ZONE WIDTHS PER PASCO COUNTY LDC 901.6(D)(6) IN THE FOLLOWING TABLE:

STREET TYPE	FDOT TYPE F & D CURB	FDOT TYPE A, E, & MIAMI CURB
2	4'	6'
3	4'	6'
4	1½'	6'

1. *FOR PRIVATE STREETS, ENTRANCE AND EXIT GATE EQUIPMENT, GUARDHOUSE, OR OTHER LIKE STRUCTURE MAY BE SET BACK 1½ FEET FROM THE FDOT TYPE F AND D CURB.*
2. *WIDTHS IN ABOVE CHART ARE MEASURED FROM FACE OF BARRIER CURB OR EDGE OF PAVEMENT IF NO BARRIER CURB PROVIDED.*

PASCO COUNTY PAVEMENT DESIGN CRITERIA

MINIMUM SN*	ROADWAY CLASSIFICATION
2.34	LOCAL
3.50	TYPE 1
3.50	SUBDIVISION COLLECTOR
3.70	SUBDIVISION COLLECTOR

* FROM PASCO COUNTY LDC SECTION 901

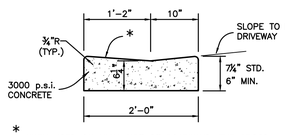

* WHEN USED ON HIGH SIDE OF ROADWAYS, THE CROSS SLOPE OF THE GUTTER SHALL MATCH THE CROSS SLOPE OF THE ADJACENT PAVEMENT. THE THICKNESS OF THE LIP SHALL BE 6", UNLESS OTHERWISE SHOWN.

DROP CURB

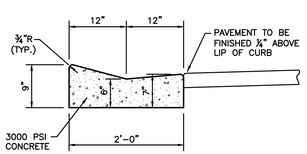

TYPE "A" CURB AND GUTTER

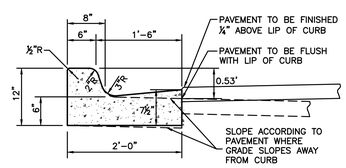

TYPE "F" CURB AND GUTTER

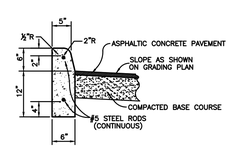

6" UPRIGHT CURB

PASCO COUNTY SUBDIVISION
PAVEMENT CONSTRUCTION NOTES (CRUSHED CONCRETE)

1. *PAVEMENT WEARING SURFACE SHALL BE ASPHALTIC CONCRETE OF TYPE AND THICKNESS SHOWN IN DETAIL AND SHALL MEET CURRENT FLORIDA DEPARTMENT OF TRANSPORTATION (FDOT) SPECIFICATIONS.*
2. *PAVEMENT BASE SHALL BE CRUSHED CONCRETE, AS DESIGNATED IN PLANS, AND SHALL BE COMPACTED TO A MINIMUM THICKNESS AS SHOWN.*
3. *CRUSHED CONCRETE ROAD BASE MATERIAL SHALL MEET THE FOLLOWING CONDITIONS:*

THE WORK SPECIFIED UNDER THIS SECTION CONSISTS OF THE CONSTRUCTION OF ROADWAY BASE UTILIZING CRUSHED CONCRETE (RECLAIMED CONCRETE AGGREGATE BASE MATERIAL) ON A PREPARED STABILIZED SUBGRADE OF LBR 40 WITH A DENSITY OF 98% OF THE MODIFIED PROCTOR MAXIMUM DENSITY AS DETERMINED BY FM1-T 180, METHOD D, IN CONFORMITY WITH THE LINES, GRADES NOTES AND TYPICAL CROSS SECTIONS SHOWN IN THE PLANS, AND AS DIRECTED BY THE COUNTY ENGINEER.

THE CONSTRUCTION OF CRUSHED CONCRETE BASE SHALL CONFORM TO THE REQUIREMENTS OF THIS SECTION, OR, IN LIEU THEREOF, SUCH REQUIREMENTS AS MAY BE ESTABLISHED BY THE COUNTY ENGINEER DURING CONSTRUCTION. THE COUNTY ENGINEER SHALL HAVE FULL AUTHORITY TO MODIFY THE PROVISIONS OF THIS SECTION AS DEEMED NECESSARY, IN HIS OPINION, TO MEET FIELD CONDITIONS AND REQUIREMENTS.

3.1. MATERIALS

3.1.1. CRUSHED CONCRETE MUST BE PRODUCED FROM A SOURCE APPROVED BY FLORIDA DEPARTMENT OF TRANSPORTATION OR THE COUNTY ENGINEER. THE SUPPLIER SHALL HAVE DEPARTMENT OF ENVIRONMENTAL PROTECTION (DEP) PERMIT REQUIREMENTS SECTION 62-701.730 OR BE QUALIFIED AS A CLEAN DEBRIS SOURCE UNDER DEP RULES. THE RECLAIMED CONCRETE AGGREGATE BASE SHALL CONSIST OF CRUSHED CONCRETE MATERIAL DERIVED FROM THE CRUSHING OF HARD PORTLAND CEMENT CONCRETE.

3.2. COMPOSITION

3.2.1. BASE MATERIAL SHALL CONFORM TO THE FOLLOWING GRADATION REQUIREMENTS:

SIEVE SIZE	% BY WEIGHT PASSING
2 INCH	100
3/4 INCH	65 TO 95
3/8 INCH	40 TO 85
NO. 4	25 TO 65
NO. 10	20 TO 50
NO. 50	5 TO 25
NO. 200	0 TO 10

3.2.2. CRUSHED CONCRETE BASE SHALL NOT CONTAIN PLASTIC SOILS SUCH THAT THE NO. 40 SIEVE MATERIAL SHALL BE NON-PLASTIC.

3.2.3. LIQUID LIMIT (AS DETERMINED BY AASHTO T80) (LESS THAN 25) PER MATERIAL TYPE

3.2.4. THE FINISHED IN-PLACE CRUSHED CONCRETE BASE LIMEROCK BEARING RATIO SHALL HAVE A MINIMUM (LBR) OF 150.

3.2.5. CRUSHED CONCRETE BASE SHALL BE FREE OF ALL MATERIALS THAT FALL UNDER THE CATEGORY OF SOLID WASTE OR HAZARD MATERIALS AS DEFINED BY THE STATE OR LOCAL JURISDICTION AND SHALL MEET ALL DEP PERMIT REQUIREMENTS WHICH PERTAIN TO CONSTRUCTION, DEMOLITION AND RECYCLING OF THESE MATERIALS. CRUSHED CONCRETE BASE SHALL BE ASBESTOS FREE. THE FOLLOWING LIMITS SHALL NOT BE EXCEEDED:

BITUMINOUS CONCRETE	1.0% BY WEIGHT
BRICKS	1.0% BY WEIGHT
WOOD & OTHER ORGANIC SUBSTANCES	0.5% BY WEIGHT
HEAVY METALS (EXCEPT LEAD)	0.1% BY WEIGHT
LEAD	5 PARTS PER MILLION
REINFORCED STEEL AND WELDED FABRIC	0.1% BY WEIGHT
PLASTER AND GYPSUM BOARD	0.1% BY WEIGHT

3.2.6. THE MATERIAL FOR CRUSHED CONCRETE BASE SHALL CONSIST ONLY OF CRUSHED CONCRETE PAVEMENT AND SUCH ADDITIVE MATERIAL AS MAY BE APPROVED BY THE COUNTY ENGINEER FOR THE PURPOSE OF FACILITATING CONSTRUCTION AND ACHIEVING THE DESIRED CHARACTERISTICS OF THE FINISHED IN-PLACED PRODUCT. APPROVAL FROM THE COUNTY ENGINEER IS REQUIRED BEFORE PLACING MATERIAL FROM MORE THAN ONE SOURCE. ONCE APPROVED, A CHANGE IN THE SOURCE OF BASE MATERIAL SHALL REQUIRE ADDITIONAL ACCEPTANCE TESTING. THE MATERIAL SHALL NOT CONTAIN LUMPS, BALLS OR POCKETS OF SAND OR CLAY MATERIAL IN SIZE OR QUANTITY SUFFICIENT TO BE DETRIMENTAL TO THE PROPER BONDING, FINISHING, STRENGTH OF THE CONCRETE BASE. EXISTING BASE IS TO BE REMOVED TO CONSTRUCT THE NEW BASE.

3.3. EQUIPMENT, PLACEMENT AND SPREADING OF MATERIAL

3.3.1. USE MECHANICAL ROCK SPREADERS, EQUIPPED WITH A DEVICE THAT STRIKES OFF THE ROCK UNIFORMLY TO LAYING THICKNESS AND CAPABLE OF PRODUCING EVEN DISTRIBUTION. FOR ROADWAY WIDTHS OF 20 FEET OR LESS, CROSSOVERS, INTERSECTIONS, RAMP AREAS OR WHERE THE USE OF A MECHANICAL SPREADER IS NOT PRACTICABLE; THE CONTRACTOR MAY SPREAD THE CRUSHED CONCRETE BASE USING BULLDOZERS OR BLADE GRADERS.

3.3.2. TRANSPORT CRUSHED CONCRETE TO THE POINT OF USE, OVER THE BASE PREVIOUSLY PLACED, AND DUMP IT ON THE END OF THE PRECEDING SPREAD. HAULING ON SUBGRADE TO DUMP CRUSHED CONCRETE BASE WILL BE PERMITTED ONLY WHEN, IN THE ENGINEER'S OPINION, THESE OPERATIONS WILL NOT BE DETRIMENTAL TO THE BASE AND SUBGRADE.

3.3.3. CRUSHED CONCRETE SHALL BE SPREAD UNIFORMLY WITHOUT SEGREGATION OF FINE OR COURSE MATERIALS. SEGREGATED AREAS SHALL BE REPLACED WITH PROPERLY GRADED CRUSHED CONCRETE AFTER REMOVAL.

3.3.4. THE MINIMUM THICKNESS OF THE CRUSHED CONCRETE BASE SHALL BE INDICATED ON THE PLANS. WHEN THE SPECIFIED COMPACTED THICKNESS OF THE CRUSHED CONCRETE BASE IS GREATER THAN SIX INCHES, CONSTRUCT THE BASE IN MULTIPLE COURSES OF EQUAL THICKNESS. INDIVIDUAL COURSES SHALL NOT BE LESS THAN THREE INCHES. PLACE CRUSHED CONCRETE MATERIAL TO ENSURE THE TOTAL THICKNESS SINGLE SOURCE INTEGRITY AT ANY STATION LOCATION OF THE BASE.

3.4. COMPACTING, FINISHING AND TESTING REQUIREMENTS

3.4.1. AFTER SPREADING IS COMPLETED THE CRUSHED CONCRETE SHALL BE UNIFORMLY COMPACTED, WITH WATER BEING ADDED AS REQUIRED TO A DENSITY OF NOT LESS THAN ONE HUNDRED PERCENT (100%) OF THE MAXIMUM DENSITY AS DETERMINED BY AASHTO T-180. DURING FINAL COMPACTION OPERATIONS, IF THE BLADING OF ANY AREAS IS NECESSARY TO OBTAIN THE TRUE GRADE AND CROSS SECTION, FREE OF SCABS AND LAMINATIONS, THE COMPACTING OPERATIONS FOR SUCH AREAS SHALL BE COMPLETED PRIOR TO THE PERFORMANCE OF DENSITY TESTS ON THE FINISHED BASE.

3.4.2. MULTIPLE COURSE BASE: CLEAN THE FIRST COURSE OF FOREIGN MATERIAL, THEN BLADE AND BRING IT TO A SURFACE CROSS-SECTION APPROXIMATELY PARALLEL TO THE FINISHED BASE. BEFORE SPREADING ANY MATERIAL FOR THE UPPER COURSES, OBTAIN DENSITY TESTS FOR THE LOWER COURSES TO DETERMINE THAT THE REQUIRED COMPACTION [NOT LESS THAN ONE HUNDRED PERCENT (100%) OF THE MAXIMUM DENSITY AS DETERMINED BY AASHTO T-180 HAS BEEN OBTAINED]. AFTER SPREADING THE CRUSHED CONCRETE FOR THE TOP COURSE, FINISH AND SHAPE ITS SURFACE TO PRODUCE THE REQUIRED GRADE AND CROSS-SECTION, FREE OF SCABS AND LAMINATIONS, AFTER COMPACTION.

3.4.3. THE MINIMUM DENSITY THAT WILL BE ACCEPTED AT ANY LOCATION OUTSIDE THE TRAVELED ROADWAY (SUCH AS INTERSECTIONS, CROSSOVERS, TURNOUTS, ETC.) SHALL BE 98% OF THE MAXIMUM DENSITY AS DETERMINED BY AASHTO T-180.

3.5. TESTING OF BASE COURSE

3.5.1. THE MINIMUM FREQUENCY OF SAMPLING AND TESTING OF CRUSHED CONCRETE MATERIAL, LAB DENSITY, FIELD DENSITY AND THICKNESS SHALL ADHERE TO THE FREQUENCY OF TESTING FOR LIMEROCK BASE IN THE MOST CURRENT EDITION OF "PASCO COUNTY ENGINEERING SERVICES DEPARTMENT TESTING SPECIFICATIONS FOR CONSTRUCTION OF ROADS, STORM DRAINAGE AND UTILITIES". ONE PLANT MIX DESIGN, ONE PLANT GRADATION TEST FOR SIEVE ANALYSIS OF FINE AND COARSE AGGREGATES (AASHTO T-27) (FM1-T027) INCLUDING A PLASTICITY INDEX (FM-T090) (AASHTO T-90) FROM THE APPROVED SOURCE SHALL BE SUBMITTED AT ONE PER DAY OR CHANGE OF MATERIAL. ONE ROADWAY FIELD TEST FOR SIEVE ANALYSIS OF FINE AND COARSE AGGREGATES (ASTM C-136) SHALL BE SUBMITTED PER 500 FEET OF ROAD PER DAY PER MIX DESIGN; MINIMUM ONE PER ROAD.

3.5.2. THE CONTRACTOR SHALL BE RESPONSIBLE FOR ALL TESTING PERFORMED IN CONNECTION WITH CONSTRUCTION OF THE BASE.

3.6. CORRECTION OF DEFECTS

3.6.1. ALL SEGREGATED AREAS OF FINE OR COURSE CRUSHED CONCRETE SHALL BE REMOVED AND REPLACED WITH PROPERLY GRADED RECLAIMED CONCRETE AGGREGATE BASE MATERIAL. ALL DEFECTS IN MATERIALS AND CONSTRUCTION SHALL BE CORRECTED BY THE CONTRACTOR, AT HIS EXPENSE, AND TO THE SATISFACTION OF THE COUNTY ENGINEER.

3.7. PRIMING AND MAINTENANCE

3.7.1. APPLY THE PRIME COAT ONLY WHEN THE BASE MEETS THE SPECIFIED DENSITY REQUIREMENTS AND WHEN THE MOISTURE CONTENT. AT THE TIME OF PRIMING, ENSURE THAT THE BASE IS FIRM, UNYIELDING AND IN SUCH CONDITION THAT NO UNDUE DISTORTION WILL OCCUR. MAINTAIN THE TRUE CROWN AND TEMPLATE, WITH NO RUTTING OR DISTORTION, WHILE APPLYING THE SURFACE COURSE.

3.8. PASCO COUNTY TESTING SPECIFICATIONS ON CRUSHED CONCRETE BASE

3.8.1. TESTS FOR BASE THICKNESS, AND DENSITY SHALL BE LOCATED NO MORE THAN THREE HUNDRED (300) FEET APART AND SHALL BE STAGGERED TO THE LEFT, RIGHT, AND ON THE CENTERLINE OF ROADWAY. THERE SHALL BE NO LESS THAN ONE (1) TEST PER STREET. BEARING VALUE, GRADATION AND FIELD TEST FOR SIEVE ANALYSIS OF FINE AND COARSE AGGREGATES (ASTM C-136) SHALL BE NO MORE THAN FIVE HUNDRED (500) FEET.

3.8.2. EXAMPLE: A SEVEN HUNDRED FEET ROAD WOULD REQUIRE TWO FIELD LBR AND GRADATION TESTS, THREE FIELD DENSITY AND THICKNESS TESTS ALONG WITH THE APPROPRIATE LAB TESTING.

4. *SUBGRADE SHALL BE PREPARED IN ACCORDANCE WITH FDOT INDEX NO. 505, LATEST EDITION. EMBANKMENT FILLS OR NATURAL SANDS TO 24-INCHES BELOW THE BOTTOM OF THE PAVEMENT BASE (IF NO STABILIZED SUBGRADE), OR TO 24-INCHES BELOW THE BOTTOM OF STABILIZED SUBGRADE, SHALL BE SANDY SOILS (A-3 OR SP/SP-SM) WITH TYPICALLY 15% FINES OR LESS PASSING THE NO. 200 SIEVE.*
5. *A TYPE "B" STABILIZED SUBGRADE WITH A MINIMUM LBR OF 40 AND TESTED AT A FREQUENCY REQUIRED BY FDOT IS REQUIRED BENEATH CRUSHED CONCRETE BASE COURSES.*
6. *SUBGRADE UNDER A CRUSHED CONCRETE BASE SHALL BE PROOF-ROLLED TO GRADE, AS DIRECTED AND APPROVED BY THE ENGINEER WITH SUITABLE COMPACTION EQUIPMENT TO ACHIEVE A MINIMUM DENSITY OF NINETY-EIGHT (98) PERCENT OF THE MAXIMUM DRY DENSITY AS DETERMINED BY AASHTO T-180 FOR A MINIMUM DEPTH OF TWELVE (12) INCHES.*
7. *THE SUBGRADE SHALL BE INSPECTED AND APPROVED BY THE ENGINEER PRIOR TO PLACEMENT OF ANY BASE MATERIAL.*
8. *THE BASE COURSE SHALL BE INSPECTED AND APPROVED BY THE ENGINEER PRIOR TO PLACEMENT OF ANY ASPHALT MATERIAL.*
9. *CRUSHED CONCRETE SURFACE SHALL BE INSPECTED AND APPROVED BY THE ENGINEER PRIOR TO ANY PAVING OPERATION.*
10. *ALL CURBS AND GUTTERS SHALL BE PLACED ON A FOUNDATION OF TYPE "B" STABILIZED SUBGRADE WITH A MINIMUM LBR OF 40 AND WHICH HAS BEEN COMPACTED TO A MINIMUM DENSITY OF NINETY-EIGHT (98) PERCENT OF THE MAXIMUM DRY DENSITY AS DETERMINED BY AASHTO T 180 FOR A MINIMUM DEPTH OF TWELVE (12) INCHES.*
11. *ROADWAY UNDERDRAIN HAS BEEN LOCATED ON THESE PLANS TO MEET THE MINIMUM STANDARDS OF PASCO COUNTY.PRIOR TO CURB CONSTRUCTION, THE GEOTECHNICAL ENGINEER SHALL REVIEW THE PREDESIGN BORINGS AND, ALONG WITH THEIR FIELD INSPECTION, MAKE A RECOMMENDATION REGARDING ADDITIONAL UNDERDRAIN REQUIREMENTS.*
12. *SHOULD NO UNDERDRAIN BE SPECIFIED ON THE PLANS THE CONTRACTOR IS TO INCLUDE 1,000 LINEAR FEET OF UNDERDRAIN AT UNIT PRICES FOR BID PURPOSES.*
13. *ALL PORTLAND CEMENT CONCRETE SHALL HAVE A MINIMUM COMPRESSIVE STRENGTH OF 3,000 P.S.I. UNLESS OTHERWISE SPECIFIED.*

PASCO COUNTY SUBDIVISION
SOIL CEMENT BASE SPECIFICATIONS

DESCRIPTION
CONSTRUCT A BASE COURSE COMPOSED OF A COMBINATION OF SOIL, PORTLAND CEMENT, AND WATER.

MATERIALS
MEET THE FOLLOWING REQUIREMENTS:

- *CEMENT: PORTLAND CEMENT, TYPE I, II, III, OR TYPE I-P OR TYPE I-S [SECTION 921]*
- *WATER: USE WATER THAT IS FREE FROM SUBSTANCES DELETERIOUS TO HARDENING OF THE SOIL-CEMENT MIXTURE.*
- *CURING MATERIAL: [SECTION 916-4]*
- *USE EMULSIFIED ASPHALT GRADE SS, RS, OR MS AS APPROVED BY THE ENGINEER, DILUTE THESE AS RECOMMENDED BY MANUFACTURER.*
- *SOIL: FOR BASE COURSE CONSTRUCTION, USE EITHER THE MATERIAL EXISTING IN THE LOCATION TO OCCUPIED BY BASE, A SUITABLY FRIABLE MATERIAL FURNISHED BY THE CONTRACTOR, OR A COMBINATION OF THESE. IF THE MATERIAL EXISTING IN THE LOCATION TO BE OCCUPIED BY THE BASE DOES NOT MEET THE REQUIREMENTS SPECIFIED BELOW, REMOVE AND REPLACE WITH SUITABLE SOIL.*
- *OBTAIN APPROVAL OF THE MATERIAL PITS PRIOR TO USE. EXCAVATE MATERIAL PITS TO ACHIEVE A UNIFORMLY MIXED MATERIAL WITH REASONABLY CONSISTENT CHARACTERISTICS. BLEND STRATA OR DIFFERING MATERIALS IN ACCORDANCE WITH A PROCEDURE APPROVED BY THE ENGINEER. THE COUNTY WILL CONSIDER PROPOSED RECYCLED MATERIALS ON A CASE BY CASE BASIS.*

- *SPECIFIC REQUIREMENTS FOR SOIL:*
- *ORGANIC MATERIAL (AS PER FM 1-T267) MAXIMUM 5%*
- *TOTAL CLAY AND SILT CONTENT*
  (MINUS NO. 200 [75 µO SIEVE]
  (AS PER FM 1-T088, NO HYDROMETER TEST) MAXIMUM 25%
- *PLASTIC INDEX (AS PER FM 1-T090) MAXIMUM 10%*
- *LIQUID LIMIT (AS PER FM 1-T089) MAXIMUM 25%*
- *GRADATION:*
  - *PASSING 2 INCH [50MM] SIEVE MINIMUM 100%*
  - *PASSING NO. 4 [4.75 MM] SIEVE MINIMUM 55%*
  - *PASSING NO. 10 [2.00 MM] SIEVE MINIMUM 37%*
  (AS PER FM 1-T088)

AS AN EXCEPTION TO THE ABOVE REQUIREMENTS, THE CONTRACTOR MAY USE ANY MATERIAL MEETING THE REQUIREMENTS FOR LIMEROCK.

NOTE:
THE ABOVE SOIL CEMENT BASE SPECIFICATIONS WERE TAKEN FROM FDOT STANDARD SPECIFICATIONS FOR ROAD AND BRIDGE CONSTRUCTION 2002 MANUAL – SECTION 270, AS SUCH, THE REFERENCED MATERIALS FOR SOIL CEMENT BASE SHALL CONFORM TO THE REQUIREMENTS SPECIFIED IN
DIVISION III (MATERIALS) OF THE FDOT MANUAL AS WELL.

SOIL CEMENT SHALL BE PLANT MIXED. DESIGN MIX SHALL BE 300 PSI AND CONSTRUCTED BASE SHALL NOT EXCEED 350 PSI.

NOTE:
NO DEVIATIONS TO THIS DETAIL WILL BE PERMITTED UNLESS APPROVED BY THE COUNTY ENGINEER. ANY PROPOSED ALTERATIONS SHALL BE CLEARLY IDENTIFIED AND HIGHLIGHTED ON DETAIL.

DATE	DESCRIPTION	BY
	REVISIONS	

CLEARVIEW LAND DESIGN, P.L.
Engineering Business C.A. No.: 28858
1213 E. 6th Avenue, Tampa, Florida 33605
Office: 813-223-3919 Fax: 813-223-3975

DATE:
JORDAN A. SCHRADER P.E. NO. 74798
FLORIDA PROFESSIONAL ENGINEER

TYPICAL ROADWAY SECTIONS

JOB NO. NLC-BX-015	**BEXLEY BOULEVARD 1ST EXTENSION**
DESIGN SMIRCH	
DRAWN SMIRCH	PREPARED FOR: **NNP-BEXLEY, LLC**
DATE 08/28/2014	*Elevations based on North American Vertical Datum 1988 (NAVD 88) Conversion from NAVD 88 to NGVD 29 = +0.83 Feet*
FILE RS	SHEET 10 OF 46 SHEETS

EXISTING DRAINAGE STRUCTURE DATA

1. 3-48" RCP's
   S. Headwall
   El. 52.42
   S. Inv. 47.61
   S. Inv. 47.54
   S. Inv. 47.58
   N. Headwall El. 52.84
   N. Inv. 47.53
   N. Inv. 47.73
   N. Inv. 47.69
2. 2-36" RCP's
   S. Inv. 48.49
   S. Inv. 48.34
   N. Inv. 48.29
   N. Inv. 48.18
3. 42" RCP
   S.E. Inv. 47.38
   N.E. Inv. 46.70
   48" RCP
   S.W. Inv. 45.88
   N.W. Inv. 46.73
4. 36" RCP
   E. Inv. 47.20
   W. Inv. 46.11
5. 48" CMP
   E. Inv. 46.78
   W. Inv. 47.17
6. 18" CMP
   E. Inv. 47.05
   W. Inv. 47.95
7. 18" CMP
   E. Inv. 46.45
   W. Inv. 47.61
8. 48" RCP
   S. Inv. 44.52
   N. Inv. 44.29
9. 48" RCP
   S. Inv. 44.04
   N. Inv. 44.41
10. 48" RCP
    S. Inv. 44.19
    N. Inv. 44.76

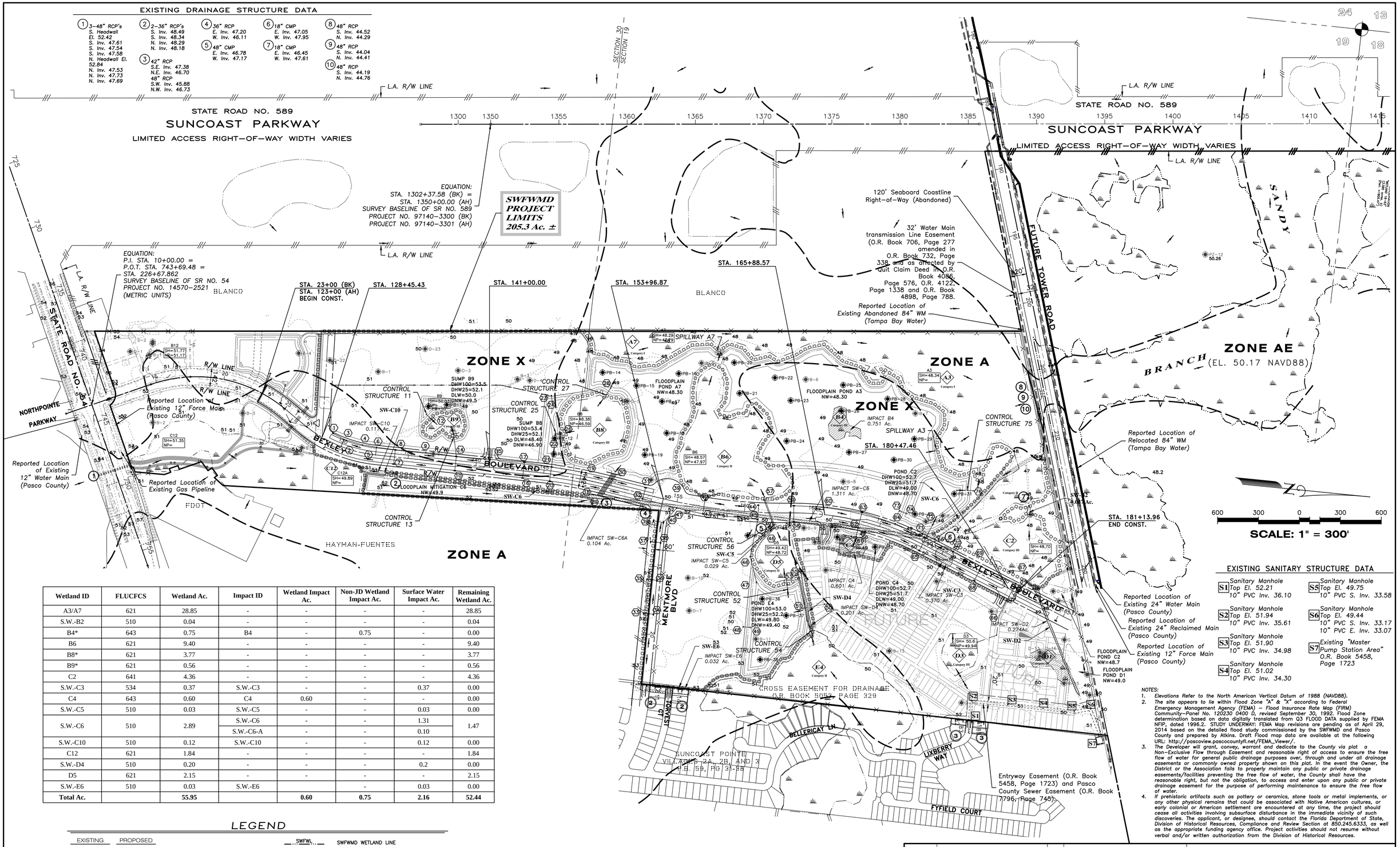

Wetland ID	FLUCFCS	Wetland Ac.	Impact ID	Wetland Impact Ac.	Non-JD Wetland Impact Ac.	Surface Water Impact Ac.	Remaining Wetland Ac.
A3/A7	621	28.85	-	-	-	-	28.85
S.W.-B2	510	0.04	-	-	-	-	0.04
B4*	643	0.75	B4	-	0.75	-	0.00
B6	621	9.40	-	-	-	-	9.40
B8*	621	3.77	-	-	-	-	3.77
B9*	621	0.56	-	-	-	-	0.56
C2	641	4.36	-	-	-	-	4.36
S.W.-C3	534	0.37	S.W.-C3	-	-	0.37	0.00
C4	643	0.60	C4	0.60	-	-	0.00
S.W.-C5	510	0.03	S.W.-C5	-	-	0.03	0.00
S.W.-C6	510	2.89	S.W.-C6	-	-	1.31	1.47
			S.W.-C6-A	-	-	0.10	
S.W.-C10	510	0.12	S.W.-C10	-	-	0.12	0.00
C12	621	1.84	-	-	-	-	1.84
S.W.-D4	510	0.20	-	-	-	0.2	0.00
D5	621	2.15	-	-	-	-	2.15
S.W.-E6	510	0.03	S.W.-E6		-	0.03	0.00
Total Ac.		**55.95**		**0.60**	**0.75**	**2.16**	**52.44**

EXISTING SANITARY STRUCTURE DATA

- **S1** Sanitary Manhole, Top El. 52.21, 10" PVC Inv. 36.10
- **S2** Sanitary Manhole, Top El. 51.94, 10" PVC Inv. 35.61
- **S3** Sanitary Manhole, Top El. 51.90, 10" PVC Inv. 34.98
- **S4** Sanitary Manhole, Top El. 51.02, 10" PVC Inv. 34.30
- **S5** Sanitary Manhole, Top El. 49.75, 10" PVC S. Inv. 33.58
- **S6** Sanitary Manhole, Top El. 49.44, 10" PVC S. Inv. 33.17, 10" PVC E. Inv. 33.07
- **S7** Existing "Master Pump Station Area" O.R. Book 5458, Page 1723

LEGEND

EXISTING	PROPOSED	
		STORM DRAINAGE STRUCTURE
10	10	STRUCTURE NO.
+15.00	15.00 OR 15.00	SPOT ELEVATION
15	15.00	CONTOUR
		DIRECTION OF SURFACE FLOW
		STAKED EROSION CONTROL (REPRESENTS THE SWFWMD BUFFER LIMITS WHERE ADJACENT TO A PROTECTED WETLAND)
AB#		SOIL BORING LOCATION
	SWFWL	SWFWMD WETLAND LINE
	25'OS	25' OFFSET FROM SWFMD WETLAND LINE SHOWN FOR INFORMATIONAL PURPOSES
	4	WETLAND IDENTIFICATION
	00	PLAN & PROFILE SHEET NO.
		PROPOSED WETLAND IMPACTS

NOTES:

1. Elevations Refer to the North American Vertical Datum of 1988 (NAVD88).
2. The site appears to lie within Flood Zone "A" & "X" according to Federal Emergency Management Agency (FEMA) – Flood Insurance Rate Map (FIRM) Community–Panel No. 120230 0400 D, revised September 30, 1992. Flood Zone determination based on data digitally translated from Q3 FLOOD DATA supplied by FEMA NFIP, dated 1996.2. STUDY UNDERWAY: FEMA Map revisions are pending as of April 29, 2014 based on the detailed flood study commissioned by the SWFWMD and Pasco County and prepared by Atkins. Draft Flood map data are available at the following URL: http://pascoview.pascocountyfl.net/FEMA_Viewer/.
3. The Developer will grant, convey, warrant and dedicate to the County via plat a Non–Exclusive Flow through Easement and reasonable right of access to ensure the free flow of water for general public drainage purposes over, through and under all drainage easements or commonly owned property shown on this plat. In the event the Owner, the District or the Association fails to properly maintain any public or private drainage easements/facilities preventing the free flow of water, the County shall have the reasonable right, but not the obligation, to access and enter upon any public or private drainage easement for the purpose of performing maintenance to ensure the free flow of water.
4. If prehistoric artifacts such as pottery or ceramics, stone tools or metal implements, or any other physical remains that could be associated with Native American cultures, or early colonial or American settlement are encountered at any time, the project should cease all activities involving subsurface disturbance in the immediate vicinity of such discoveries. The applicant, or designee, should contact the Florida Department of State, Division of Historical Resources, Compliance and Review Section at 850.245.6333, as well as the appropriate funding agency office. Project activities should not resume without verbal and/or written authorization from the Division of Historical Resources.

DATE	DESCRIPTION	BY
	REVISIONS	

CLEARVIEW LAND DESIGN, P.L.
Engineering Business C.A. No.: 28858
1213 E. 6th Avenue, Tampa, Florida 33605
Office: 813-223-3919 Fax: 813-223-3975
DATE:
JORDAN A. SCHRADER P.E. NO. 74798
FLORIDA PROFESSIONAL ENGINEER

MASTER DRAINAGE PLAN

BEXLEY BOULEVARD 1ST EXTENSION

JOB NO.	NLC–BX–015
DESIGN	SMIRCH
DRAWN	SMIRCH
PREPARED FOR:	NNP-BEXLEY, LLC
DATE	08/28/2014
	Elevations based on North American Vertical Datum 1988 (NAVD 88) Conversion from NAVD 88 to NGVD 29 = +0.83 Feet
FILE	MD1

STORM STRUCTURE DATA

STRUCTURE			LINE							STRUCTURE LOCATION & REMARKS
NO.	TYPE & SIZE	TOP ELEV.	TYPE	DIAM. IN.	LENGTH FEET	SLOPE %	INVERT ELEV. UPPER END	INVERT ELEV. LOWER END	FALL IN FEET	
52	CONTROL STRUCTURE	53.00	RCP	48	32	0.16	47.00	46.95	0.05	TYPE 'J' STRUCTURE BOTTOM REFER TO CONTROL STRUCTURE DETAILS
53	MES									
54	CONTROL STRUCTURE	51.90	RCP	48 (x2)	400	0.16	45.00	44.36	0.64	TYPE 'J' STRUCTURE BOTTOM
55	MES									FDOT INDEX NO. 272
56	CONTROL STRUCTURE	51.20	RCP	54 (x2)	190	0.12	43.00	42.77	0.23	TYPE 'J' STRUCTURE BOTTOM
57	MES									FDOT INDEX NO. 272
58	6 CURB INLET	52.98	RCP	18	104	0.30	46.62	46.31	0.31	FDOT INDEX NO. 200 & 211
59	6 CURB INLET	53.22	RCP	24	245	0.30	46.31	45.58	0.74	FDOT INDEX NO. 200 & 211
60	MANHOLE	53.95	RCP	30	256	0.30	45.08	44.31	0.77	FDOT INDEX NO. 200
63										
61	MES		RCP	24	64	0.50	46.00	45.68	0.32	FDOT INDEX NO. 272
62	6 CURB INLET	53.12	RCP	24	104	0.50	45.68	45.16	0.52	FDOT INDEX NO. 200 & 211
63	6 CURB INLET	52.88	RCP	36	256	0.30	44.16	43.39	0.77	TYPE 'J' STRUCTURE BOTTOM FDOT INDEX NO. 200 & 211
64	MANHOLE	53.95	RCP	36	247	0.30	43.39	42.65	0.74	TYPE 'J' STRUCTURE BOTTOM FDOT INDEX NO. 200
71										
65	6 CURB INLET	53.15	RCP	18	104	0.80	48.55	47.72	0.83	FDOT INDEX NO. 200 & 211
71										
66	MANHOLE	53.46	RCP	36	266	0.40	45.46	44.40	1.06	FDOT INDEX NO. 200
67	MANHOLE	54.10	RCP	36	280	0.40	44.40	43.28	1.12	FDOT INDEX NO. 200
69										
68	6 CURB INLET	53.12	RCP	18	104	0.16	46.52	46.35	0.17	FDOT INDEX NO. 200 & 211
69	6 CURB INLET	53.12	RCP	42	234	0.20	42.78	42.31	0.47	TYPE 'J' STRUCTURE BOTTOM FDOT INDEX NO. 200 & 211
70	MANHOLE	53.90	RCP	48	244	0.20	41.81	41.32	0.49	TYPE 'J' STRUCTURE BOTTOM FDOT INDEX NO. 200
71	6 CURB INLET	53.15	RCP	48	104	0.21	41.32	41.10	0.22	TYPE 'J' STRUCTURE BOTTOM FDOT INDEX NO. 200 & 211
72	MES									FDOT INDEX NO. 272
73	E GTI	53.50	RCP	30	48	0.30	45.00	44.86	0.14	
74	MES									FDOT INDEX NO. 272
75	CONTROL STRUCTURE	52.70	RCP	30	48	0.20	46.00	45.87	0.13	REFER TO CONTROL STRUCTURE DETAILS
76	MES									FDOT INDEX NO. 272

STORM STRUCTURE DATA

STRUCTURE			LINE							STRUCTURE LOCATION & REMARKS
NO.	TYPE & SIZE	TOP ELEV.	TYPE	DIAM. IN.	LENGTH FEET	SLOPE %	INVERT ELEV. UPPER END	INVERT ELEV. LOWER END	FALL IN FEET	
25	CONTROL STRUCTURE	53.40	RCP	60 (x2)	40	0.12	46.00	45.95	0.05	TYPE 'J' STRUCTURE BOTTOM REFER TO CONTROL STRUCTURE DETAILS
26	MES									FDOT INDEX NO. 272
27	CONTROL STRUCTURE	53.40	RCP	36	56	0.20	44.00	43.89	0.11	TYPE 'J' STRUCTURE BOTTOM
28	MES									FDOT INDEX NO. 272
29	4-7'x4' CBC	55.80	RCP	48	194	0.10	45.50	45.31	0.19	FDOT INDEX NO'S 289, 291, 292
30	HEADWALL									
31	6 CURB INLET	55.56	RCP	18	96	0.80	50.96	50.19	0.77	FDOT INDEX NO. 200 & 211
32	5 CURB INLET	55.55	RCP	18	258	0.50	50.19	48.90	1.29	FDOT INDEX NO. 200 & 211
41										
33	MANHOLE	56.26	RCP	18	31	0.30	50.83	50.74	0.09	FDOT INDEX NO. 200
34	5 CURB INLET	55.56	RCP	18	250	0.30	50.74	49.99	0.75	FDOT INDEX NO. 200 & 211
36										
35	MANHOLE	55.51	RCP	18	31	0.30	50.08	49.99	0.09	FDOT INDEX NO. 200
36	5 CURB INLET	54.81	RCP	18	277	0.30	49.99	49.16	0.83	FDOT INDEX NO. 200 & 211
38										
37	MANHOLE	54.68	RCP	18	31	0.30	49.25	49.16	0.09	FDOT INDEX NO. 200
38	5 CURB INLET	53.98	RCP	24	149	0.30	48.20	47.75	0.45	FDOT INDEX NO. 200 & 211
40										
39	6 CURB INLET	53.52	RCP	18	74	0.90	48.92	48.25	0.67	FDOT INDEX NO. 200 & 211 CONSTRUCT TEMPORARY INLET TOP
40	6 CURB INLET	53.52	RCP	36	144	0.30	45.75	45.32	0.43	TYPE 'J' STRUCTURE BOTTOM FDOT INDEX NO. 200 & 211
41	MANHOLE	54.18	RCP	42	196	0.30	45.32	44.73	0.59	TYPE 'J' STRUCTURE BOTTOM FDOT INDEX NO. 200
43										
42	5 CURB INLET	54.07	RCP	18	104	0.80	49.47	48.64	0.83	FDOT INDEX NO. 200 & 211
43	5 CURB INLET	54.07	RCP	42	405	0.30	44.73	43.52	1.22	TYPE 'J' STRUCTURE BOTTOM FDOT INDEX NO. 200 & 211
45										
44	5 CURB INLET	54.00	RCP	18	104	0.80	49.40	48.57	0.83	FDOT INDEX NO. 200 & 211
45	5 CURB INLET	54.00	RCP	42	279	0.30	43.52	42.68	0.84	TYPE 'J' STRUCTURE BOTTOM FDOT INDEX NO. 200 & 211
46	MANHOLE	53.00	RCP	42	187	0.12	42.68	42.46	0.22	TYPE 'J' STRUCTURE BOTTOM FDOT INDEX NO. 200
47	MES									FDOT INDEX NO. 272
48	E GTI	53.50	RCP	48	48	0.24	43.00	42.88	0.12	TYPE 'J' STRUCTURE BOTTOM
49	MES									FDOT INDEX NO. 272
50	MANHOLE	53.50	RCP	48	161	0.24	41.50	41.11	0.39	TYPE 'J' STRUCTURE BOTTOM FDOT INDEX NO. 200
51	MES									FDOT INDEX NO. 272

STORM STRUCTURE DATA

STRUCTURE			LINE							STRUCTURE LOCATION & REMARKS
NO.	TYPE & SIZE	TOP ELEV.	TYPE	DIAM. IN.	LENGTH FEET	SLOPE %	INVERT ELEV. UPPER END	INVERT ELEV. LOWER END	FALL IN FEET	
1A	C DBI	54.50	RCP	18	32	0.44	51.20	51.06	0.14	FDOT INDEX NO. 232
EX										
1	5 CURB INLET	54.21	RCP	18	94	0.36	49.85	49.51	0.34	FDOT INDEX NO. 200 & 211
3										
2	5 CURB INLET	56.46	RCP	18	78	2.10	51.86	50.22	1.64	FDOT INDEX NO. 200 & 211
3	MANHOLE	54.23	RCP	24	138	0.30	49.01	48.60	0.41	FDOT INDEX NO. 200
4	MANHOLE	54.68	RCP	24	104	0.30	48.60	48.29	0.31	FDOT INDEX NO. 200
6										
5	5 CURB INLET	56.34	RCP	18	78	2.10	51.74	50.10	1.64	FDOT INDEX NO. 200 & 211
6	MANHOLE	55.07	RCP	24	139	0.30	48.29	47.87	0.42	FDOT INDEX NO. 200
8										
7	6 CURB INLET	54.57	RCP	18	104	0.36	49.97	49.60	0.37	FDOT INDEX NO. 200 & 211
8	6 CURB INLET	54.57	RCP	30	225	0.30	47.37	46.69	0.68	FDOT INDEX NO. 200 & 211
9	MANHOLE	55.33	RCP	30	225	0.30	46.69	46.02	0.68	FDOT INDEX NO. 200
14										
10	6 CURB INLET	54.57	RCP	18	104	0.80	49.97	49.14	0.83	FDOT INDEX NO. 200 & 211
14										
11	CONTROL STRUCTURE	53.50	RCP	18	43	0.50	48.90	48.69	0.22	REFER TO CONTROL STRUCTURE DETAILS
12	MES									FDOT INDEX NO. 272
13	CONTROL STRUCTURE	53.50	RCP	18	144	0.36	48.90	48.38	0.52	REFER TO CONTROL STRUCTURE DETAILS
14	6 CURB INLET	54.57	RCP	36	250	0.40	45.52	44.52	1.00	TYPE 'J' STRUCTURE BOTTOM FDOT INDEX NO. 200 & 211
15	MANHOLE	55.45	RCP	36	250	0.40	44.52	43.52	1.00	TYPE 'J' STRUCTURE BOTTOM FDOT INDEX NO. 200
17										
16	6 CURB INLET	54.62	RCP	18	104	0.36	50.02	49.65	0.37	FDOT INDEX NO. 200 & 211
17	6 CURB INLET	54.38	RCP	36	201	0.30	43.42	42.92	0.60	FDOT INDEX NO. 200 & 211
21										
18	5 CURB INLET	55.97	RCP	18	104	0.40	51.37	50.95	0.42	FDOT INDEX NO. 200 & 211
19	5 CURB INLET	55.97	RCP	18	253	0.30	50.95	50.20	0.76	FDOT INDEX NO. 200 & 211
21										
20	5 CURB INLET	55.22	RCP	18	104	0.80	50.62	49.79	0.83	FDOT INDEX NO. 200 & 211
21	5 CURB INLET	55.22	RCP	36	80	0.16	42.92	42.79	0.13	TYPE 'J' STRUCTURE BOTTOM FDOT INDEX NO. 200 & 211
22	MES									FDOT INDEX NO. 272
23	H GTI	53.50	RCP	60	48	0.20	40.40	40.30	0.10	TYPE 'J' STRUCTURE BOTTOM
24	MES									FDOT INDEX NO. 272

DATE	DESCRIPTION	BY
	REVISIONS	

CLEARVIEW LAND DESIGN, P.L.
Engineering Business C.A. No.: 28858
1213 E. 6th Avenue, Tampa, Florida 33605
Office: 813-223-3919 Fax: 813-223-3975

DATE:
JORDAN A. SCHRADER P.E. NO. 74798
FLORIDA PROFESSIONAL ENGINEER

STORM STRUCTURE DATA

JOB NO. NLC-BX-015
DESIGN SMIRCH
DRAWN SMIRCH
DATE 08/28/2014
FILE ST

BEXLEY BOULEVARD 1ST EXTENSION

PREPARED FOR: **NNP-BEXLEY, LLC**

Elevations based on North American Vertical Datum 1988 (NAVD 88)
Conversion from NAVD 88 to NGVD 29 = +0.83 Feet

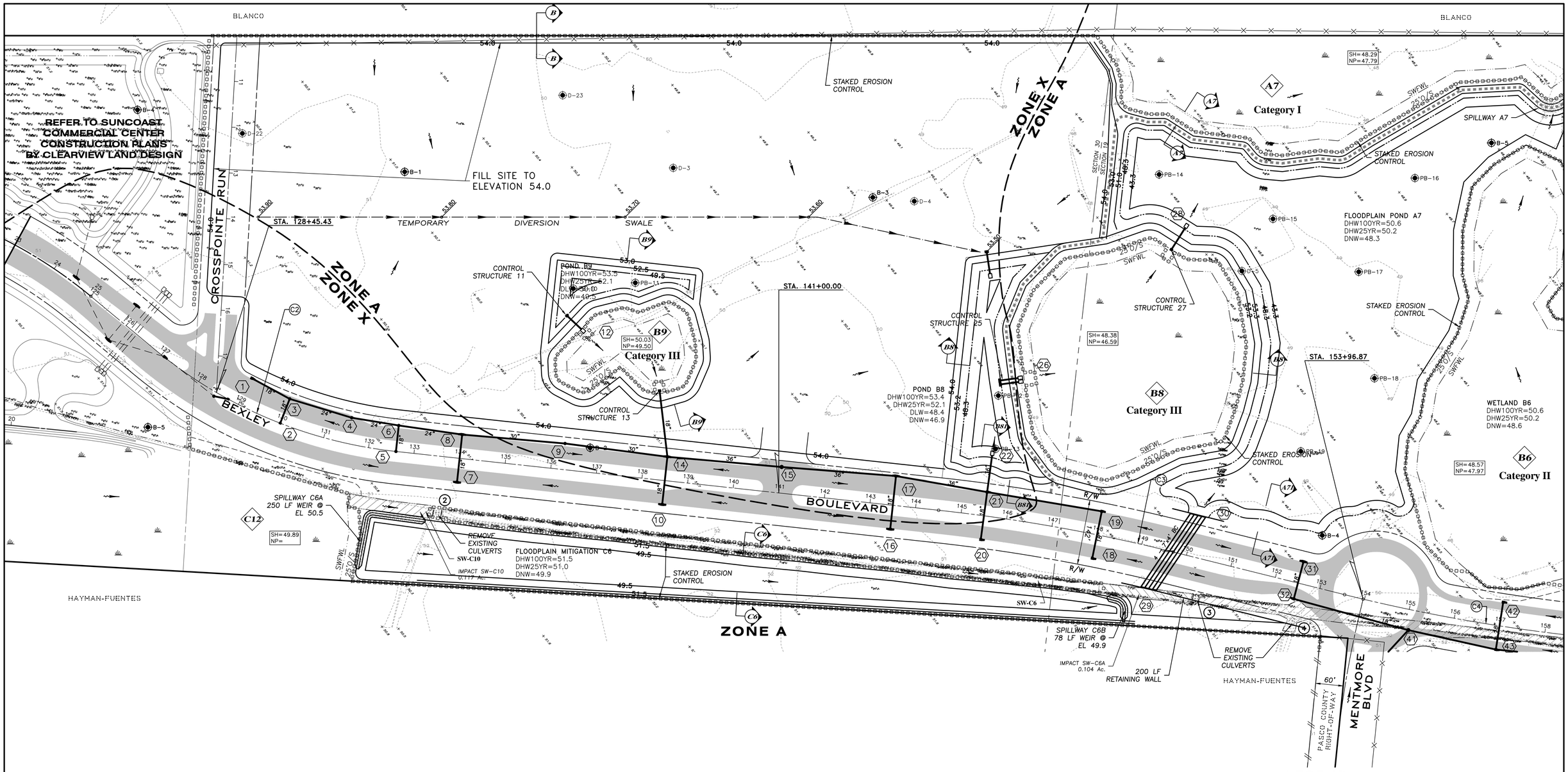

LEGEND

EXISTING	PROPOSED	
		STORM DRAINAGE STRUCTURE
10	10	STRUCTURE NO.
+15.00	+15.00 OR 15.00	SPOT ELEVATION
15	15.00	CONTOUR
		DIRECTION OF SURFACE FLOW
		STAKED EROSION CONTROL (REPRESENTS THE SWFWMD BUFFER LIMITS WHERE ADJACENT TO A PROTECTED WETLAND)
AB#		SOIL BORING LOCATION

SWFWL	SWFWMD WETLAND LINE
25'OS	25' OFFSET FROM SWFMD WETLAND LINE SHOWN FOR INFORMATIONAL PURPOSES
A	WETLAND IDENTIFICATION
00	PLAN & PROFILE SHEET NO.
	WETLAND/SURFACE WATER IMPACT
PB-# (-14)	POND BORING LOCATION (MAX DEPTH OF SUITABLE FILL FROM EXISTING GRADE)
LB-#	LOT BORING LOCATION
RA-#	ROAD AUGER LOCATION

200 100 0 100 200

SCALE: 1" = 100'

DATE	DESCRIPTION	BY
	REVISIONS	

CLEARVIEW LAND DESIGN, P.L.
Engineering Business C.A. No.: 28858
1213 E. 6th Avenue, Tampa, Florida 33605
Office: 813-223-3919 Fax: 813-223-3975
DATE:
JORDAN A. SCHRADER P.E. NO. 74798
FLORIDA PROFESSIONAL ENGINEER

GRADING & DRAINAGE PLAN

BEXLEY BOULEVARD 1ST EXTENSION

JOB NO.	NLC-BX-015
DESIGN	SMIRCH
DRAWN	SMIRCH
DATE	08/28/2014
FILE	MD2
PREPARED FOR:	NNP-BEXLEY, LLC

Elevations based on North American Vertical Datum 1988 (NAVD 88)
Conversion from NAVD 88 to NGVD 29 = +0.83 Feet

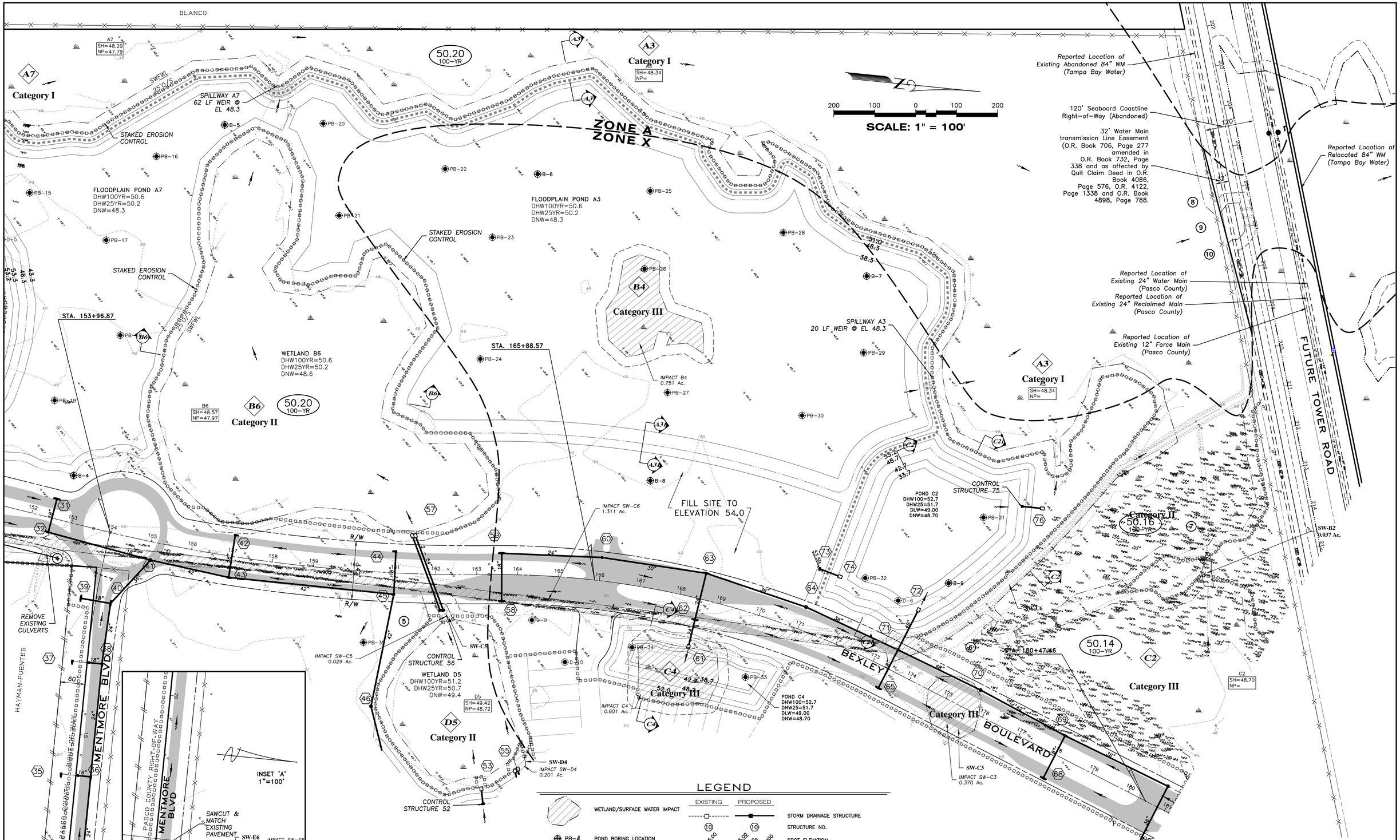

LEGEND

	EXISTING	PROPOSED
WETLAND/SURFACE WATER IMPACT		STORM DRAINAGE STRUCTURE
	10	10 OR STRUCTURE NO.
	+15.00	15.00 OR 15.00 SPOT ELEVATION
PB-# (-14) POND BORING LOCATION (MAX DEPTH OF SUITABLE FILL FROM EXISTING GRADE)	15	15.00 CONTOUR
SWFWL SWFWMD WETLAND LINE		DIRECTION OF SURFACE FLOW
25'OS 25' OFFSET FROM SWFMD WETLAND LINE SHOWN FOR INFORMATIONAL PURPOSES		STAKED EROSION CONTROL (REPRESENTS THE SWFWMD BUFFER LIMITS WHERE ADJACENT TO A PROTECTED WETLAND)
A WETLAND IDENTIFICATION		AB# SOIL BORING LOCATION
00 PLAN & PROFILE SHEET NO.		

DATE	DESCRIPTION	BY
	REVISIONS	

CLEARVIEW LAND DESIGN, P.L.
Engineering Business C.A. No.: 28858
1213 E. 6th Avenue, Tampa, Florida 33605
Office: 813-223-3919 Fax: 813-223-3975

DATE:
JORDAN A. SCHRADER P.E. NO. 74798
FLORIDA PROFESSIONAL ENGINEER

GRADING & DRAINAGE PLAN

BEXLEY BOULEVARD 1ST EXTENSION

PREPARED FOR: NNP-BEXLEY, LLC

JOB NO.	NLC-BX-015
DESIGN	SMIRCH
DRAWN	SMIRCH
DATE	08/28/2014
FILE	MD3

Elevations based on North American Vertical Datum 1988 (NAVD 88)
Conversion from NAVD 88 to NGVD 29 = +0.83 Feet

STA. 153+96.87
STAKED EROSION CONTROL
SH=48.57
NP=47.97
B6
Category II
STA. 165+88.57
ZONE X
CONTROL STRUCTURE 75
POND C2
DHW100YR=52.7
DHW25YR=51.7
DLW=49.0
DNW=48.7
Category II
50.16
100-YR
SW-B2
0.197 Ac.
SW-C6
FUTURE TOWER ROAD
BEXLEY
BOULEVARD
MENTMORE BLVD
HAYMAN-FUENTES
SW-C5
IMPACT SW-C6
1.311 Ac.
IMPACT SW-C5
0.029 Ac.
CONTROL STRUCTURE 56
D5
Category II
WETLAND D5
DHW100YR=51.2
DHW25YR=50.7
DNW=49.4
SH=49.42
NP=48.72
C4
Category III
POND C4
DHW100YR=52.7
DHW25YR=51.7
DLW=49.0
DNW=48.7
IMPACT C4
0.601 Ac.
STA. 180+47.46
C2
Category III
SH=48.70
NP=
50.14
100-YR
SW-C3
IMPACT SW-C3
0.370 Ac.
FLOODPLAIN
POND C2
NW=48.7
CONTROL STRUCTURE 52
POND E4
DHW100YR=53.0
DHW25YR=52.2
DLW=49.9
DNW=49.4
SW-D4
IMPACT SW-D4
0.201 Ac.
CONTROL STRUCTURE 54
FUTURE
ZONE X
ZONE A
IMPACT SW-D2
0.274Ac.
SW-D2
SH= 50.6
NP=49.94
D3
Category III
D1
Category III
50.13
100-YR
FLOODPLAIN
POND D1
NW=49.0
E4
Category II
51.90
100-YR
IMPACT SW-E6
0.032 Ac.
SW-E6
POND D3
DHW100YR=52.8
DHW25YR=52.0
DLW=50.6
DNW=49.9
FUTURE
CROSS EASEMENT FOR DRAINAGE
O.R. BOOK 5053, PAGE 329
FLOODPLAIN
POND E4
NW=50.00
Entryway Easement (O.R. Book 5458, Page 1723) and Pasco County Sewer Easement (O.R. Book 7796, Page 745).
TORVEST CT
SUNCOAST POINTE
VILLAGES 2A, 2B, AND 3
P.B. 59, PG 31-38
BELLERICAY LN.
LIXBERRY WAY

LEGEND

		EXISTING	PROPOSED	
	WETLAND/SURFACE WATER IMPACT			STORM DRAINAGE STRUCTURE
PB-# (-14)	POND BORING LOCATION (MAX DEPTH OF SUITABLE FILL FROM EXISTING GRADE)	10	10	STRUCTURE NO.
		+15.00	15.00 OR 15+00	SPOT ELEVATION
SWFWL	SWFWMD WETLAND LINE	15	15.00	CONTOUR
25'OS	25' OFFSET FROM SWFMD WETLAND LINE SHOWN FOR INFORMATIONAL PURPOSES			DIRECTION OF SURFACE FLOW
4	WETLAND IDENTIFICATION			STAKED EROSION CONTROL (REPRESENTS THE SWFWMD BUFFER LIMITS WHERE ADJACENT TO A PROTECTED WETLAND)
00	PLAN & PROFILE SHEET NO.		AB#	SOIL BORING LOCATION

200 100 0 100 200

SCALE: 1" = 100'

DATE	DESCRIPTION	BY
	REVISIONS	

CLEARVIEW LAND DESIGN, P.L.
Engineering Business C.A. No.: 28858
1213 E. 6th Avenue, Tampa, Florida 33605
Office: 813-223-3919 Fax: 813-223-3975

DATE:
JORDAN A. SCHRADER P.E. NO. 74798
FLORIDA PROFESSIONAL ENGINEER

GRADING & DRAINAGE PLAN

JOB NO. NLC-BX-015
DESIGN SMIRCH
DRAWN SMIRCH
DATE 08/28/2014
FILE MD4

BEXLEY BOULEVARD
1ST EXTENSION

PREPARED FOR: NNP-BEXLEY, LLC

Elevations based on North American Vertical Datum 1988 (NAVD 88)
Conversion from NAVD 88 to NGVD 29 = +0.83 Feet

SHEET 15 OF 46 SHEETS

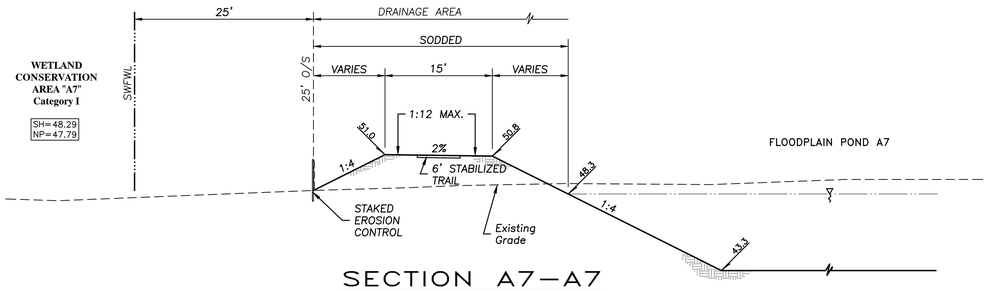

SECTION A7–A7

– NO SCALE –

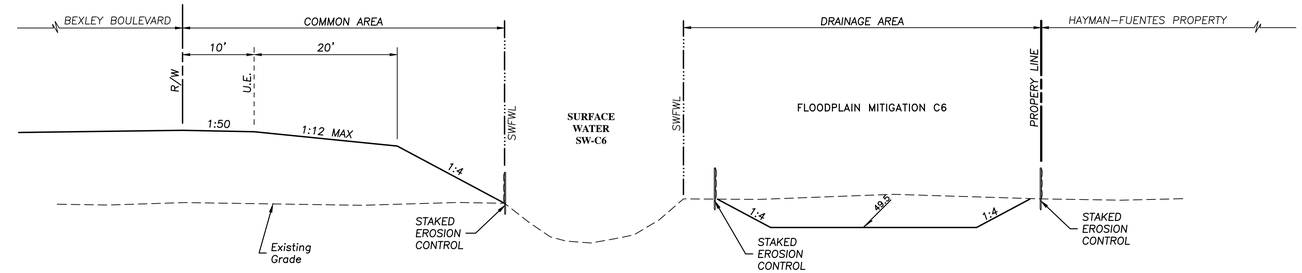

SECTION C6–C6

– NO SCALE –

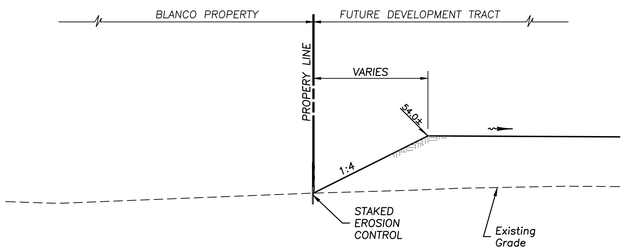

SECTION B–B

– NO SCALE –

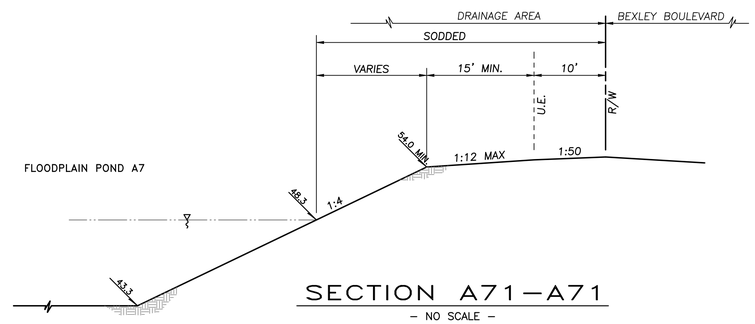

SECTION A71–A71

– NO SCALE –

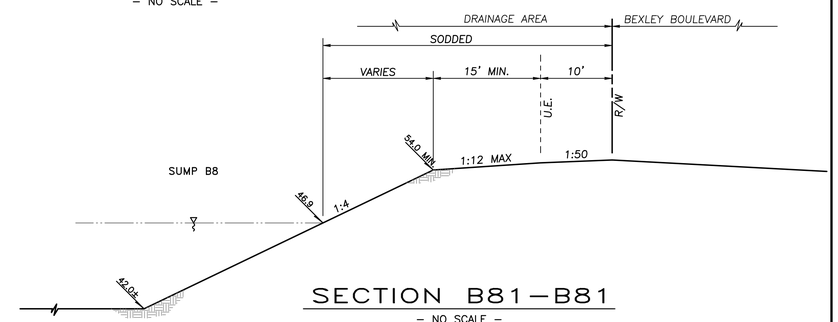

SECTION B81–B81

– NO SCALE –

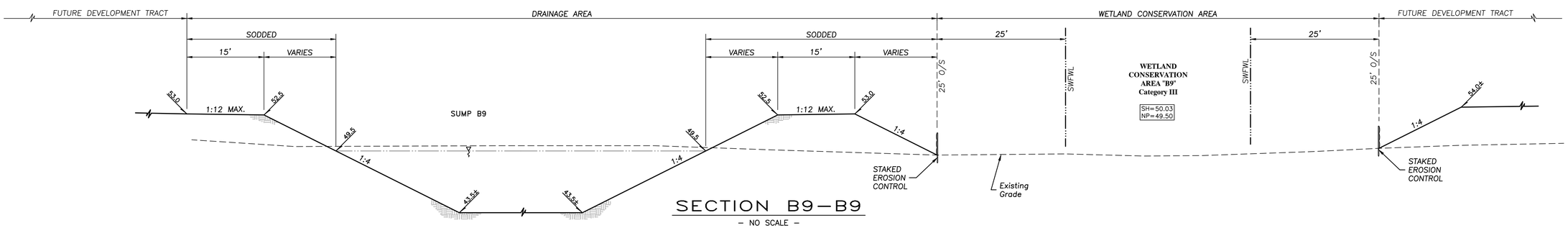

SECTION B9–B9

– NO SCALE –

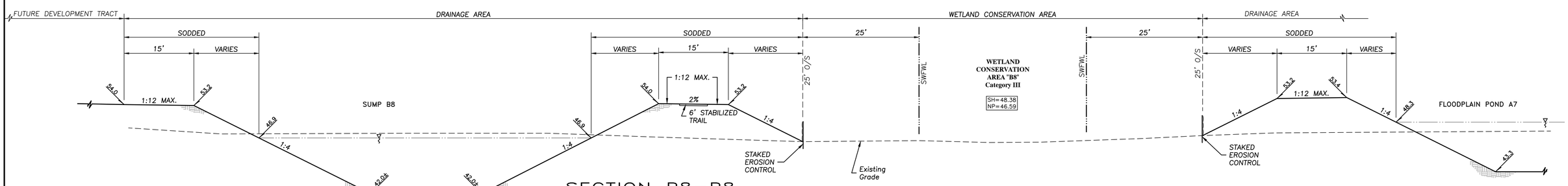

SECTION B8–B8

– NO SCALE –

DATE	DESCRIPTION	BY
	REVISIONS	

CLEARVIEW LAND DESIGN, P.L.
Engineering Business C.A. No.: 28858
1213 E. 6th Avenue, Tampa, Florida 33605
Office: 813–223–3919 Fax: 813–223–3975

DATE:
JORDAN A. SCHRADER P.E. NO. 74798
FLORIDA PROFESSIONAL ENGINEER

CROSS-SECTIONS

JOB NO. NLC–BX–015
DESIGN SMIRCH
DRAWN SMIRCH
DATE 08/28/2014
FILE SEC

BEXLEY BOULEVARD 1ST EXTENSION

PREPARED FOR: **NNP-BEXLEY, LLC**

Elevations based on North American Vertical Datum 1988 (NAVD 88)
Conversion from NAVD 88 to NGVD 29 = +0.83 Feet

SHEET 16 OF 46 SHEETS

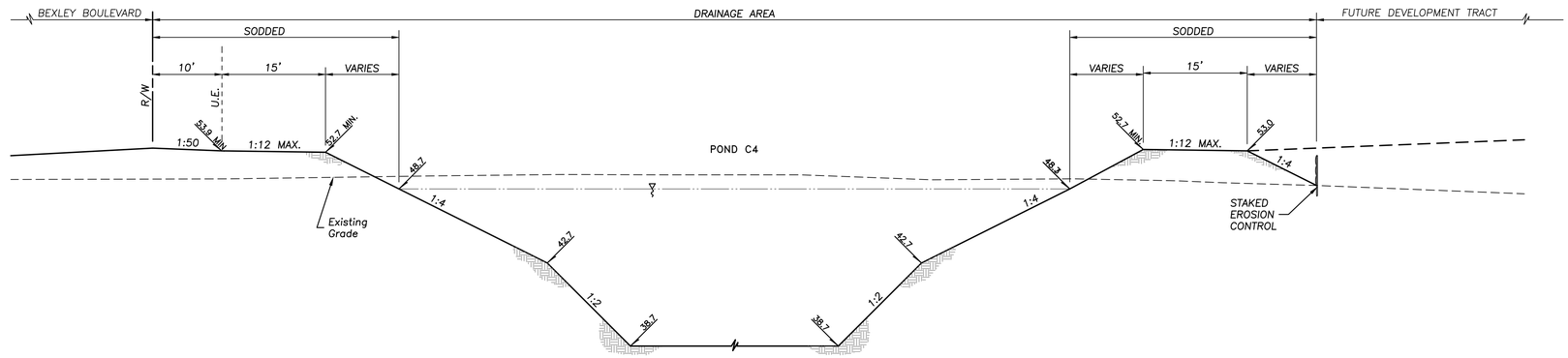

SECTION C4–C4

– NO SCALE –

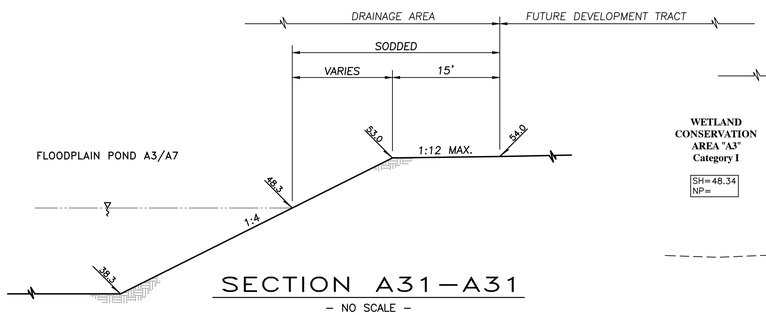

SECTION A31–A31

– NO SCALE –

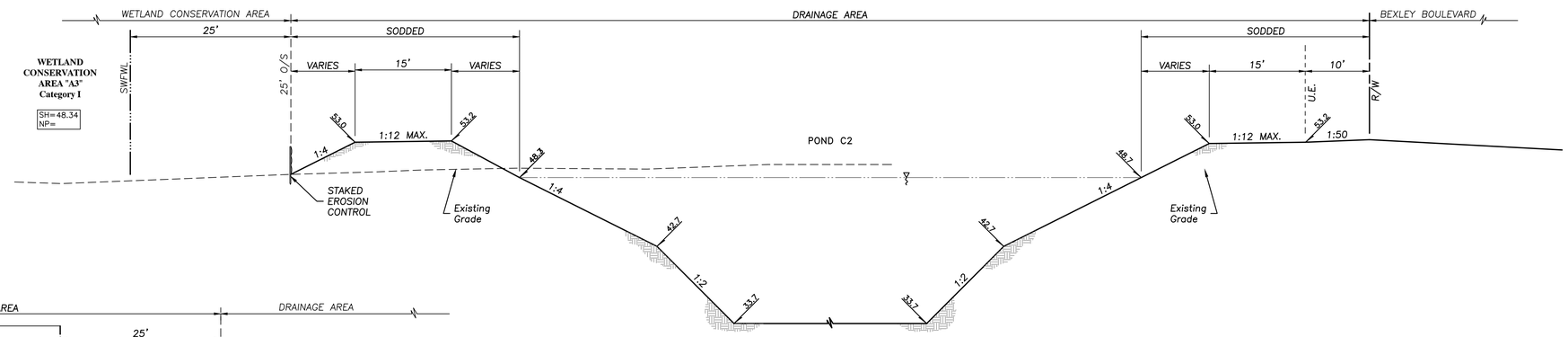

SECTION C21–C21

– NO SCALE –

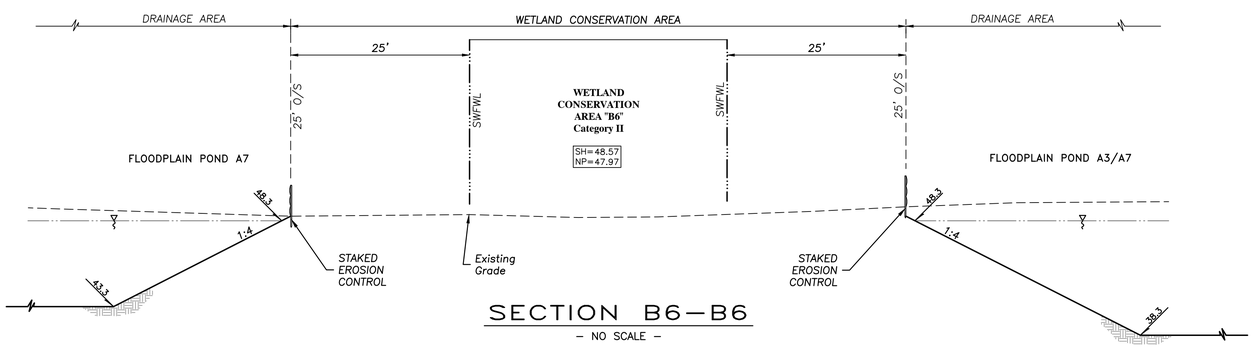

SECTION B6–B6

– NO SCALE –

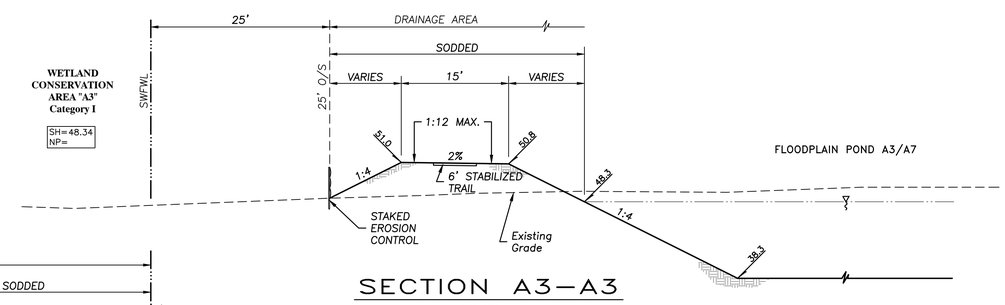

SECTION A3–A3

– NO SCALE –

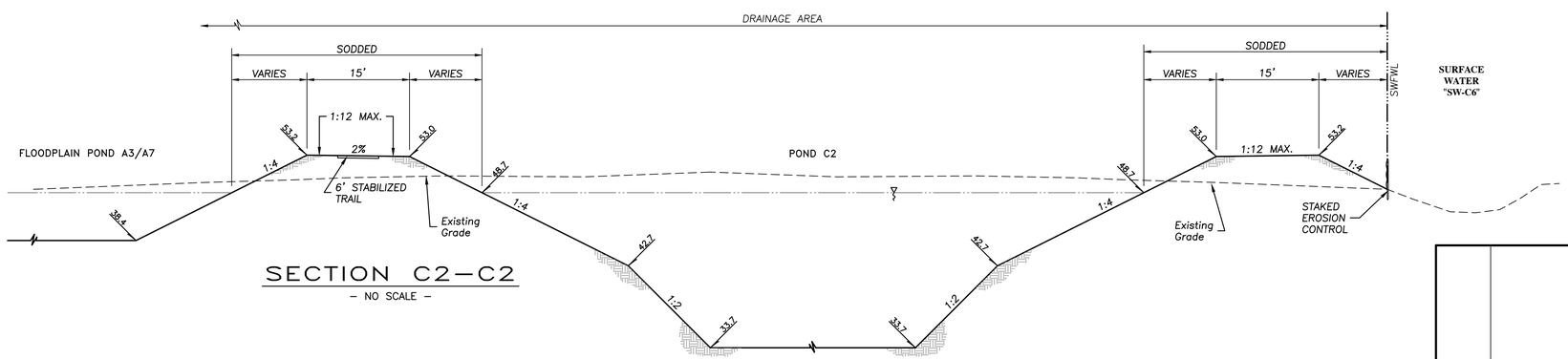

SECTION C2–C2

– NO SCALE –

DATE	DESCRIPTION	BY
	REVISIONS	

CLEARVIEW LAND DESIGN, P.L.
Engineering Business C.A. No.: 28858
1213 E. 6th Avenue, Tampa, Florida 33605
Office: 813–223–3919 Fax: 813–223–3975

DATE:
JORDAN A. SCHRADER P.E. NO. 74798
FLORIDA PROFESSIONAL ENGINEER

CROSS-SECTIONS

JOB NO. NLC–BX–015
DESIGN SMIRCH
DRAWN SMIRCH
DATE 08/28/2014
FILE SEC

BEXLEY BOULEVARD 1ST EXTENSION

PREPARED FOR: **NNP-BEXLEY, LLC**

Elevations based on North American Vertical Datum 1988 (NAVD 88)
Conversion from NAVD 88 to NGVD 29 = +0.83 Feet

SHEET 17 OF 46 SHEETS

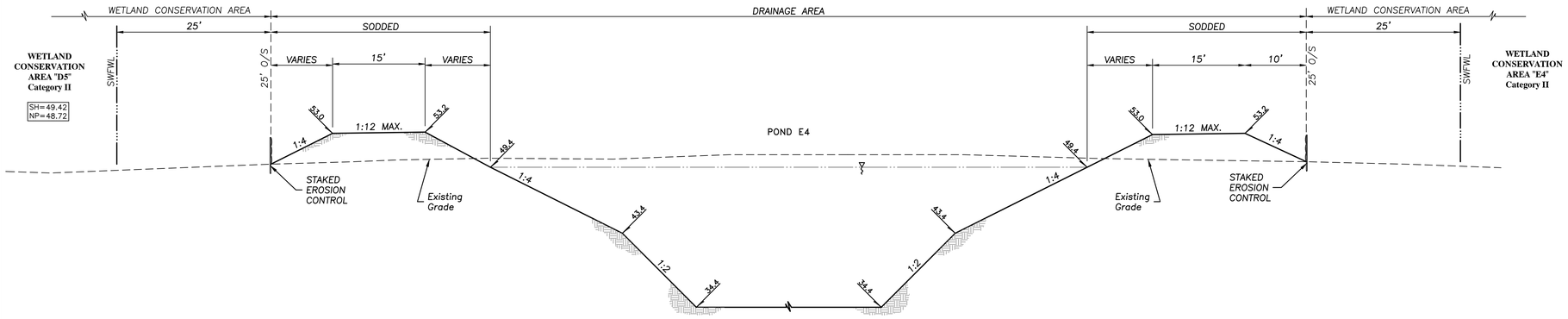

SECTION E4–E4

– NO SCALE –

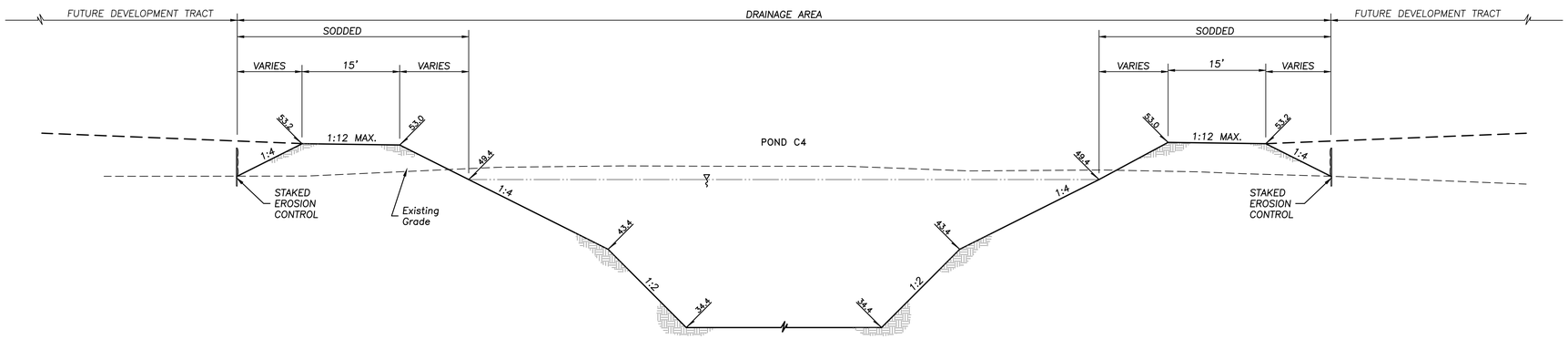

SECTION E41–E41

– NO SCALE –

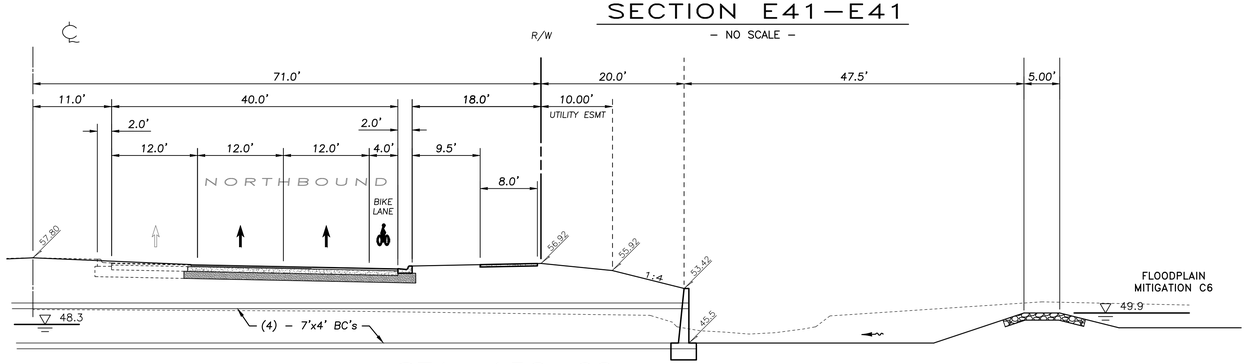

STA. 152+62

– NO SCALE –

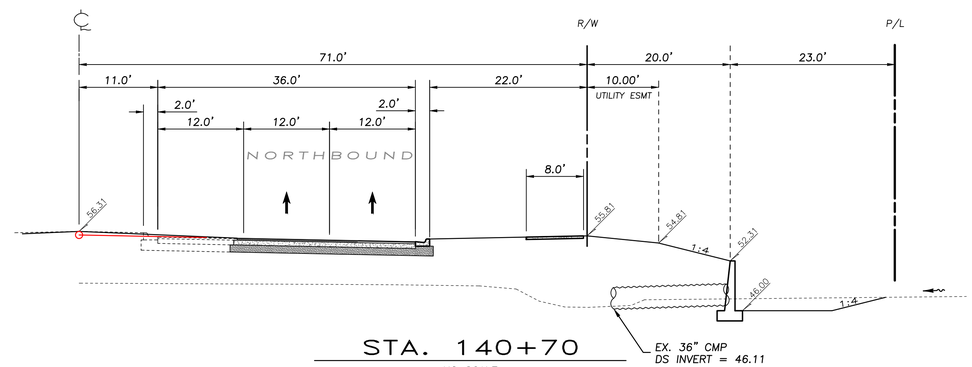

STA. 140+70

– NO SCALE –

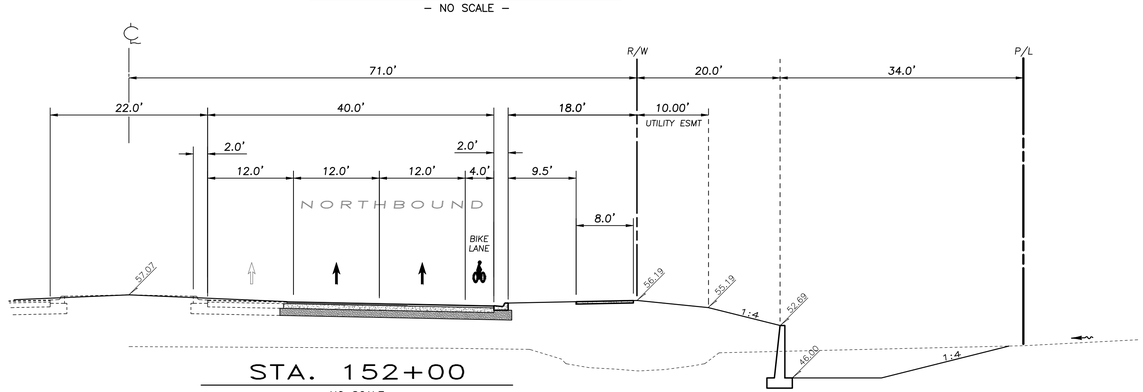

STA. 152+00

– NO SCALE –

DATE	DESCRIPTION	BY
	REVISIONS	

CLEARVIEW LAND DESIGN, P.L.
Engineering Business C.A. No.: 28858
1213 E. 6th Avenue, Tampa, Florida 33605
Office: 813-223-3919 Fax: 813-223-3975

DATE:
JORDAN A. SCHRADER P.E. NO. 74798
FLORIDA PROFESSIONAL ENGINEER

CROSS-SECTIONS

JOB NO. NLC-BX-015
DESIGN SMIRCH
DRAWN SMIRCH
DATE 08/28/2014
FILE SEC

BEXLEY BOULEVARD 1ST EXTENSION

PREPARED FOR: NNP-BEXLEY, LLC

Elevations based on North American Vertical Datum 1988 (NAVD 88)
Conversion from NAVD 88 to NGVD 29 = +0.83 Feet

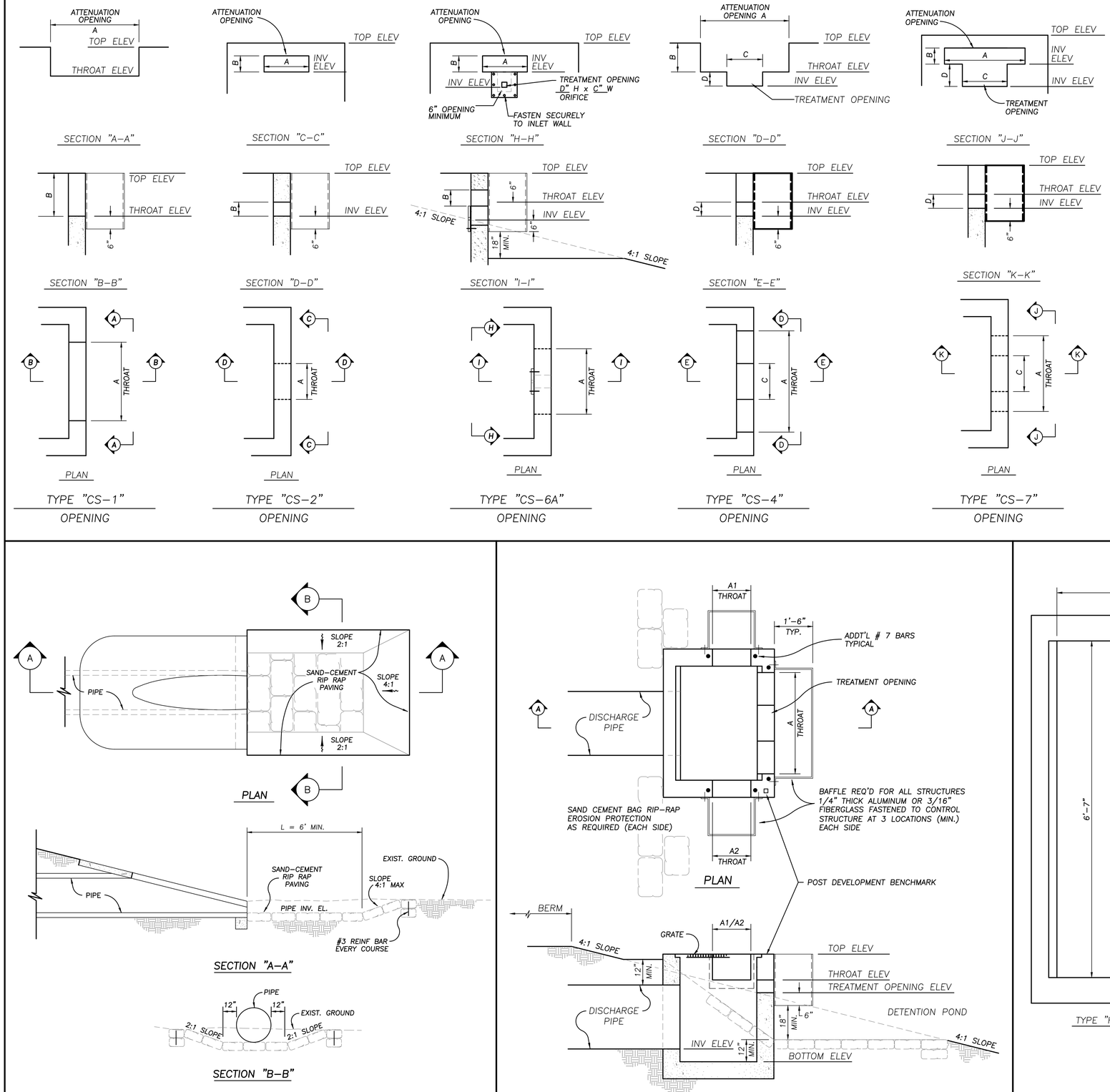

CONTROL STRUCTURE DATA

STR. NO.	FDOT BOX TYPE	TOP EL. (FT.)	BOTT. EL. (FT.)	DISCHARGE PIPE TYPE	DISCHARGE PIPE SIZE (IN.)	DISCHARGE PIPE INV. EL. (FT.)	ATTENUATION AND TREATMENT CONTROLS STR. TYPE	ATTENUATION OPENING A	ATTENUATION OPENING B	EL. (FT.)	TREATMENT OPENING C	TREATMENT OPENING D	EL. (FT.)	REMARKS
11	C	53.50	47.90	RCP	18	48.90	CS–1	A=2'–6"	3'–3⅝"	50.00				SUMP B9
								A1=1'–6"						
13	C	53.50	47.90	RCP	18	48.90	CS–6A	A=1'–6"	9"	50.00	2"	2"	49.50	WETLAND B9
								A1=1'–6"						
25	H	53.40	45.00	RCP	60	46.00	CS–1	6'–0"	4'–9¾"	48.38				SUMP B8; 3–GRATE H BOX (x2)
	H	53.40	45.00	RCP	60	46.00	CS–1	6'–0"	4'–9¾"	48.38				
27	E	53.40	43.00	RCP	36	44.00	CS–2	42"	6"	48.38				WETLAND B8
52	H	53.00	46.00	RCP	48	47.00	CS–4	79"	38⅜"	49.80	66"	5"	49.40	POND E4; 3–GRATE H BOX
54	H	51.90	44.00	RCP	48	45.00	CS–1	79"	22¾"	50.00				WETLAND E4; 3–GRATE H BOX (x2)
	H	51.90	44.00	RCP	48	45.00	CS–1	79"	22¾"	50.00				
56	H	51.20	42.00	RCP	54	43.00	CS–1	71"	38⅜"	49.40				WETLAND D5; 3–GRATE H BOX (x2)
	H	51.20	42.00	RCP	54	43.00	CS–1	71"	38⅜"	49.40				
75	E	52.70	45.00	RCP	30	46.00	CS–7	40"	3"	49.00	40"	3¾"	48.70	POND C2
							CS–2	A2=24"	3"	49.00	C2=12"	3¾"	48.70	

TYPICAL OUTFALL SUMP DETAIL

SAND–CEMENT BAG

TYPICAL CONTROL STRUCTURE

NOTE:
CONTRACTOR SHALL SUBMIT SHOP DRAWINGS TO ENGINEER FOR APPROVAL PRIOR TO CONSTRUCTING CONTROL STRUCTURES

NOTE:
DRAWING NOT TO SCALE

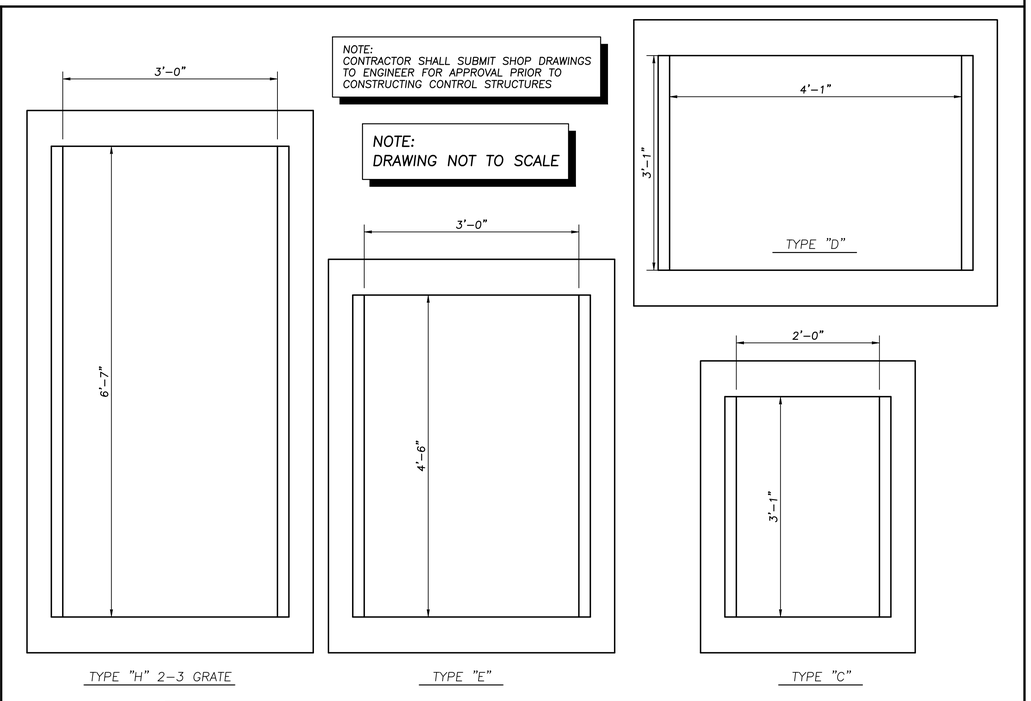

DATE	DESCRIPTION	BY
	REVISIONS	

CLEARVIEW LAND DESIGN, P.L.
Engineering Business C.A. No.: 28858
1213 E. 6th Avenue, Tampa, Florida 33605
Office: 813–223–3919 Fax: 813–223–3975
DATE:
JORDAN A. SCHRADER P.E. NO. 74798
FLORIDA PROFESSIONAL ENGINEER

CONTROL STRUCTURE DATA

JOB NO. NLC–BX–015	BEXLEY BOULEVARD 1ST EXTENSION
DESIGN SMIRCH	
DRAWN FERREIRA	PREPARED FOR: NNP-BEXLEY, LLC
DATE 08/28/2014	Elevations based on North American Vertical Datum 1988 (NAVD 88) Conversion from NAVD 88 to NGVD 29 = +0.83 Feet
FILE CSTR	SHEET 19 OF 46 SHEETS

SLEEVING NOTES

2"] DENOTES SLEEVE SIZE & LOCATION (SLEEVE LOCATIONS DEPICTED ON WATER, REUSE & SANITARY SEWER PLANS)

- 2"] IRRIGATION
- 2"L LIGHTING
- 2"T TELECOMMUNICATION
- 2"G GATE SYSTEM
- 2" ADDITIONAL SLEEVE (ADD)

ALL SLEEVING TO BE SCHEDULE 40 PVC MINIMUM THICKNESS. BURY ALL SLEEVES A MINIMUM OF 24" BELOW TOP OF CURB. NO SLEEVES SHALL BE DEEPER THAN 40" BELOW FINISH GRADE.

WHERE SEVERAL SLEEVES ARE REQUIRED, MAINTAIN 6" HORIZONTAL SEPARATION BETWEEN EACH SLEEVE. DO NOT STACK ONE ON TOP OF ANOTHER.

ALL SLEEVES ARE REQUIRED TO BE AT LEAST 2" DIA.

LOCATE ALL SLEEVES WITH PVC ELBOWS ABOVE GRADE. WHEN THERE ARE MULTIPLE SLEEVES ONLY (1) 2" SLEEVE NEEDS TO BE ELBOWED. STAKE WITH A 2 BY 4 AND MARK WITH PAINT.

ENSURE ALL SLEEVES EXTEND 24" MINIMUM BEYOND ALL CURBING OR WALKS AS REQUIRED.

CURBS AT AREA OF CROSSING TO BE MARKED USING CONCRETE SAW TO CREATE A TRIANGLE PATTERN ON THE TOP OF CURB.

ADDITIONAL SLEEVING MAY BE REQUIRED FOR ADDITIONAL UTILITIES. SITE CONTRACTOR TO COORDINATE ADDITIONAL SLEEVING ONSITE.

SEAL THE END OF ALL SLEEVES WITH DUCT TAPE.

FIELD LOCATE SLEEVES TO ENSURE THEY DO NOT LINE UP WITH SIDEWALKS.

LEGEND

- SWFWMD WETLAND LINE
- 25' OFFSET FROM WETLAND LINE (SHOWN FOR INFORMATIONAL PURPOSES)
- 26 ROADWAY PLAN & PROFILE SHEET
- A2 SANITARY SEWER (SM)
- 6" SINGLE SERVICE
- 6" DOUBLE SERVICE
- FORCE MAIN (FM)
- VALVE & BOX
- REDUCER
- PLUG
- BLOW-OFF
- BENDS
- IRRIGATION & LIGHTING SLEEVE
- RECLAIMED MAIN (RM)
- DOUBLE SERVICE (RM) SHORTSIDE
- SINGLE SERVICE (RM) SHORTSIDE
- SINGLE SERVICE (RM) LONGSIDE W/SERVICE SLEEVE
- DOUBLE SERVICE (RM) LONGSIDE W/SERVICE SLEEVE
- WATER MAIN (WM)
- FIRE HYDRANT
- DOUBLE SERVICE (WM) SHORTSIDE
- SINGLE SERVICE (WM) SHORTSIDE
- SINGLE SERVICE (WM) LONGSIDE W/SERVICE SLEEVE
- DOUBLE SERVICE (WM) LONGSIDE W/SERVICE SLEEVE
- WDSP WATER DISTRIBUTION SAMPLING POINT

PROJECT LIMITS

400 200 0 200 400

SCALE: 1" = 200'

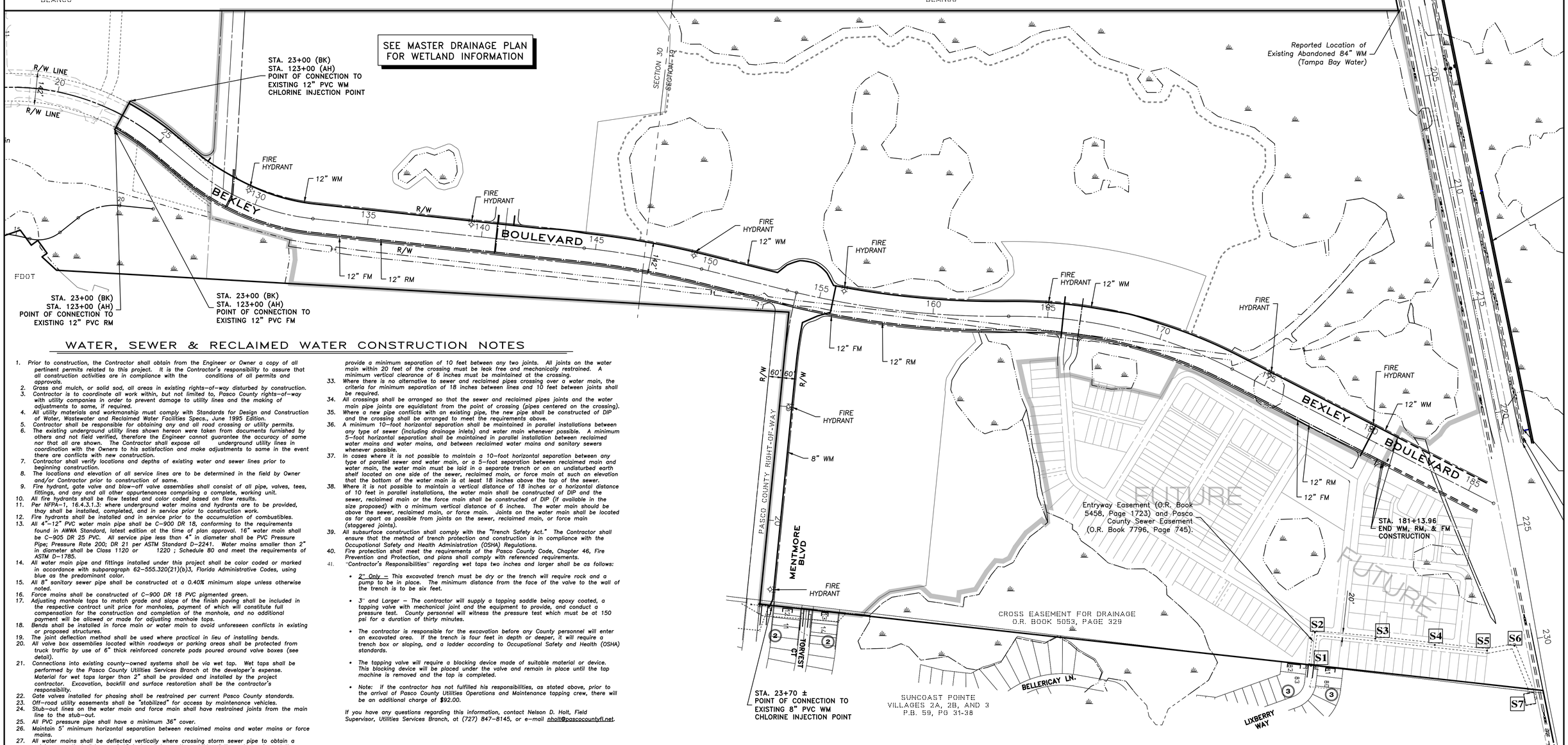

WATER, SEWER & RECLAIMED WATER CONSTRUCTION NOTES

1. Prior to construction, the Contractor shall obtain from the Engineer or Owner a copy of all pertinent permits related to this project. It is the Contractor's responsibility to assure that all construction activities are in compliance with the conditions of all permits and approvals.
2. Grass and mulch, or solid sod, all areas in existing rights-of-way disturbed by construction.
3. Contractor is to coordinate all work within, but not limited to, Pasco County rights-of-way with utility companies in order to prevent damage to utility lines and the making of adjustments to same, if required.
4. All utility materials and workmanship must comply with Standards for Design and Construction of Water, Wastewater and Reclaimed Water Facilities Specs., June 1995 Edition.
5. Contractor shall be responsible for obtaining any and all road crossing or utility permits.
6. The existing underground utility lines shown hereon were taken from documents furnished by others and not field verified, therefore the Engineer cannot guarantee the accuracy of same nor that all are shown. The Contractor shall expose all underground utility lines in coordination with the Owners to his satisfaction and make adjustments to same in the event there are conflicts with new construction.
7. Contractor shall verify locations and depths of existing water and sewer lines prior to beginning construction.
8. The locations and elevation of all service lines are to be determined in the field by Owner and/or Contractor prior to construction of same.
9. Fire hydrant, gate valve and blow-off valve assemblies shall consist of all pipe, valves, tees, fittings, and any and all other appurtenances comprising a complete, working unit.
10. All fire hydrants shall be flow tested and color coded based on flow results.
11. Per NFPA-1, 16.4.3.1.3: where underground water mains and hydrants are to be provided, thay shall be installed, completed, and in service prior to construction work.
12. Fire hydrants shall be installed and in service prior to the accumulation of combustibles.
13. All 4"-12" PVC water main pipe shall be C-900 DR 18, conforming to the requirements found in AWWA Standard, latest edition at the time of plan approval. 16" water main shall be C-905 DR 25 PVC. All service pipe less than 4" in diameter shall be PVC Pressure Pipe; Pressure Rate 200; DR 21 per ASTM Standard D-2241. Water mains smaller than 2" in diameter shall be Class 1120 or 1220 ; Schedule 80 and meet the requirements of ASTM D-1785.
14. All water main pipe and fittings installed under this project shall be color coded or marked in accordance with subparagraph 62-555.320(21)(b)3, Florida Administrative Codes, using blue as the predominant color.
15. All 8" sanitary sewer pipe shall be constructed at a 0.40% minimum slope unless otherwise noted.
16. Force mains shall be constructed of C-900 DR 18 PVC pigmented green.
17. Adjusting manhole tops to match grade and slope of the finish paving shall be included in the respective contract unit price for manholes, payment of which will constitute full compensation for the construction and completion of the manhole, and no additional payment will be allowed or made for adjusting manhole tops.
18. Bends shall be installed in force main or water main to avoid unforeseen conflicts in existing or proposed structures.
19. The joint deflection method shall be used where practical in lieu of installing bends.
20. All valve box assemblies located within roadways or parking areas shall be protected from truck traffic by use of 6" thick reinforced concrete pads poured around valve boxes (see detail).
21. Connections into existing county-owned systems shall be via wet tap. Wet taps shall be performed by the Pasco County Utilities Services Branch at the developer's expense. Material for wet taps larger than 2" shall be provided and installed by the project contractor. Excavation, backfill and surface restoration shall be the contractor's responsibility.
22. Gate valves installed for phasing shall be restrained per current Pasco County standards.
23. Off-road utility easements shall be "stabilized" for access by maintenance vehicles.
24. Stub-out lines on the water main and force main shall have restrained joints from the main line to the stub-out.
25. All PVC pressure pipe shall have a minimum 36" cover.
26. Maintain 5' minimum horizontal separation between reclaimed mains and water mains or force mains.
27. All water mains shall be deflected vertically where crossing storm sewer pipe to obtain a minimum vertical distance of 18 inches between the outside of the water main and the outside of the storm sewer. Joints shall be located such that the distance from the storm sewer and water main joint is as far as practical.
28. Water mains should be laid at least 10 feet horizontally from any existing or proposed storm sewer.
29. At no time should vertical clearance between force main or gravity sewer and water main be less than 18" at crossing of same.
30. At no time should horizontal clearance between force main or gravity sewer and water main be less than 10' when same are paralleling each other.
31. Sanitary sewers, force and reclaimed mains and storm sewers should cross under water mains. Sanitary sewers, force and reclaimed mains and storm sewers crossing water mains shall be laid to provide a minimum vertical distance of 18 inches between the invert of the upper pipe and the crown of the lower pipe whenever possible.
32. When sanitary sewers, force and reclaimed mains and storm sewers must cross a water main with less than 18 inches vertical distance, both the sewer and the water main shall be constructed of ductile iron pipe (DIP) at the crossing. (DIP is not required for storm sewers if it is not available in the size proposed). Sufficient lengths of DIP must be used to provide a minimum separation of 10 feet between any two joints. All joints on the water main within 20 feet of the crossing must be leak free and mechanically restrained. A minimum vertical clearance of 6 inches must be maintained at the crossing.
33. Where there is no alternative to sewer and reclaimed pipes crossing over a water main, the criteria for minimum separation of 18 inches between lines and 10 feet between joints shall be required.
34. All crossings shall be arranged so that the sewer and reclaimed pipes joints and the water main pipe joints are equidistant from the point of crossing (pipes centered on the crossing).
35. Where a new pipe conflicts with an existing pipe, the new pipe shall be constructed of DIP and the crossing shall be arranged to meet the requirements above.
36. A minimum 10-foot horizontal separation shall be maintained in parallel installations between any type of sewer (including drainage inlets) and water main whenever possible. A minimum 5-foot horizontal separation shall be maintained in parallel installation between reclaimed water mains and water mains, and between reclaimed water mains and sanitary sewers whenever possible.
37. In cases where it is not possible to maintain a 10-foot horizontal separation between any type of parallel sewer and water main, or a 5-foot separation between reclaimed main and water main, the water main must be laid in a separate trench or on an undisturbed earth shelf located on one side of the sewer, reclaimed main, or force main at such an elevation that the bottom of the water main is at least 18 inches above the top of the sewer.
38. Where it is not possible to maintain a vertical distance of 18 inches or a horizontal distance of 10 feet in parallel installations, the water main shall be constructed of DIP and the sewer, reclaimed main or the force main shall be constructed of DIP (if available in the size proposed) with a minimum vertical distance of 6 inches. The water main should be above the sewer, reclaimed main, or force main. Joints on the water main shall be located as far apart as possible from joints on the sewer, reclaimed main, or force main (staggered joints).
39. All subsurface construction shall comply with the "Trench Safety Act." The Contractor shall ensure that the method of trench protection and construction is in compliance with the Occupational Safety and Health Administration (OSHA) Regulations.
40. Fire protection shall meet the requirements of the Pasco County Code, Chapter 46, Fire Prevention and Protection, and plans shall comply with referenced requirements.
41. "Contractor's Responsibilities" regarding wet taps two inches and larger shall be as follows:
    - 2" Only – This excavated trench must be dry or the trench will require rock and a pump to be in place. The minimum distance from the face of the valve to the wall of the trench is to be six feet.
    - 3" and Larger – The contractor will supply a tapping saddle being epoxy coated, a tapping valve with mechanical joint and the equipment to provide, and conduct a pressure test. County personnel will witness the pressure test which must be at 150 psi for a duration of thirty minutes.
    - The contractor is responsible for the excavation before any County personnel will enter an excavated area. If the trench is four feet in depth or deeper, it will require a trench box or sloping, and a ladder according to Occupational Safety and Health (OSHA) standards.
    - The tapping valve will require a blocking device made of suitable material or device. This blocking device will be placed under the valve and remain in place until the tap machine is removed and the tap is completed.
    - Note: If the contractor has not fulfilled his responsibilities, as stated above, prior to the arrival of Pasco County Utilities Operations and Maintenance tapping crew, there will be an additional charge of $92.00.

If you have any questions regarding this information, contact Nelson D. Holt, Field Supervisor, Utilities Services Branch, at (727) 847-8145, or e-mail nholt@pascocountyfl.net.

EXISTING SANITARY STRUCTURE DATA

S1 Sanitary Manhole Top El. 52.21 10" PVC Inv. 36.10	S4 Sanitary Manhole Top El. 51.02 10" PVC Inv. 34.30	S6 Sanitary Manhole Top El. 49.44 10" PVC S. Inv. 33.17 10" PVC E. Inv. 33.07
S2 Sanitary Manhole Top El. 51.94 10" PVC Inv. 35.61	S5 Sanitary Manhole Top El. 49.75 10" PVC S. Inv. 33.58	S7 Existing "Master Pump Station Area" O.R. Book 5458, Page 1723
S3 Sanitary Manhole Top El. 51.90 10" PVC Inv. 34.98		

DATE	DESCRIPTION	BY
REVISIONS		

CLEARVIEW LAND DESIGN, P.L.
Engineering Business C.A. No.: 28858
1213 E. 6th Avenue, Tampa, Florida 33605
Office: 813-223-3919 Fax: 813-223-3975
DATE:
JORDAN A. SCHRADER P.E. NO. 74798
FLORIDA PROFESSIONAL ENGINEER

WATER & SEWER KEY MAP

BEXLEY BOULEVARD 1ST EXTENSION

NNP-BEXLEY, LLC

JOB NO.	NLC-BX-015
DESIGN	SMIRCH
DRAWN	SMIRCH
DATE	08/28/2014
FILE	WSKEY
PREPARED FOR:	NNP-BEXLEY, LLC

Elevations based on North American Vertical Datum 1988 (NAVD 88)
Conversion from NAVD 88 to NGVD 29 = +0.83 Feet

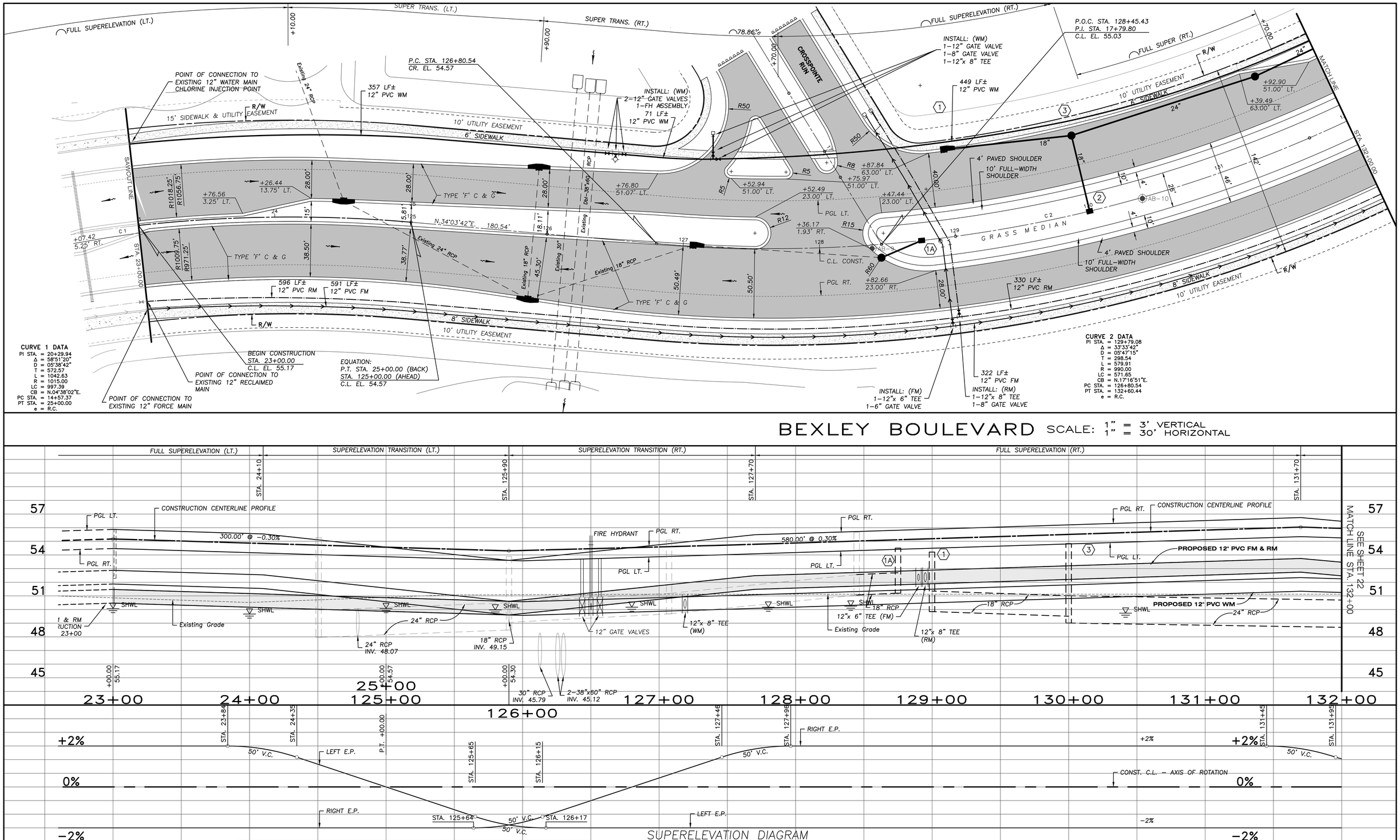

BEXLEY BOULEVARD SCALE: 1" = 3' VERTICAL 1" = 30' HORIZONTAL

SUPERELEVATION DIAGRAM

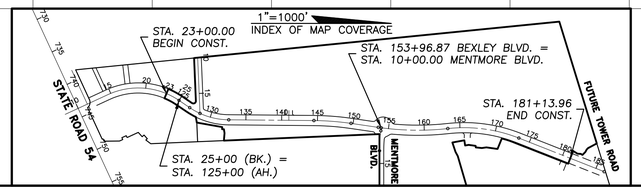

DATE	DESCRIPTION	BY
	REVISIONS	

CLEARVIEW LAND DESIGN, P.L.
Engineering Business C.A. No.: 28858
1213 E. 6th Avenue, Tampa, Florida 33605
Office: 813-223-3919 Fax: 813-223-3975

DATE:
JORDAN A. SCHRADER P.E. NO. 74798
FLORIDA PROFESSIONAL ENGINEER

ROADWAY & UTILITY PLAN & PROFILE

JOB NO. NLC-BX-015
DESIGN SMIRCH
DRAWN SMIRCH
DATE 08/28/2014
FILE RP02

BEXLEY BOULEVARD 1ST EXTENSION

PREPARED FOR: **NNP-BEXLEY, LLC**

Elevations based on North American Vertical Datum 1988 (NAVD 88)
Conversion from NAVD 88 to NGVD 29 = +0.83 Feet

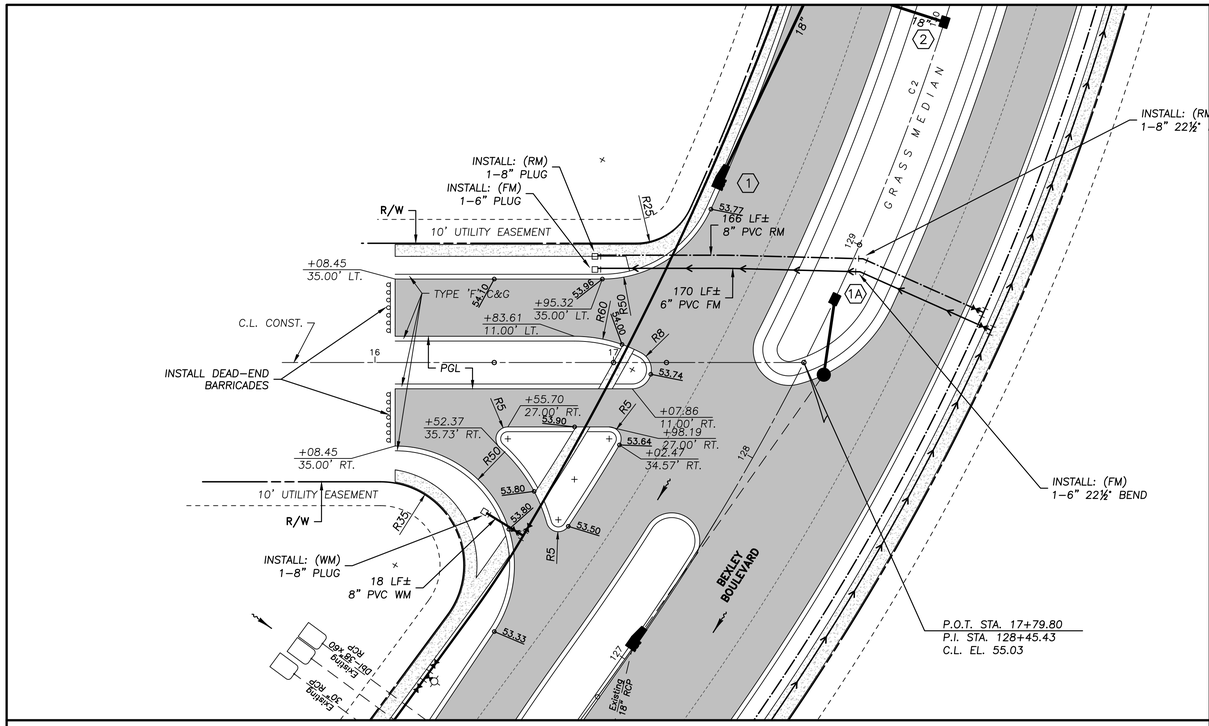

CROSSPOINTE RUN SCALE: 1" = 3' VERTICAL 1" = 30' HORIZONTAL

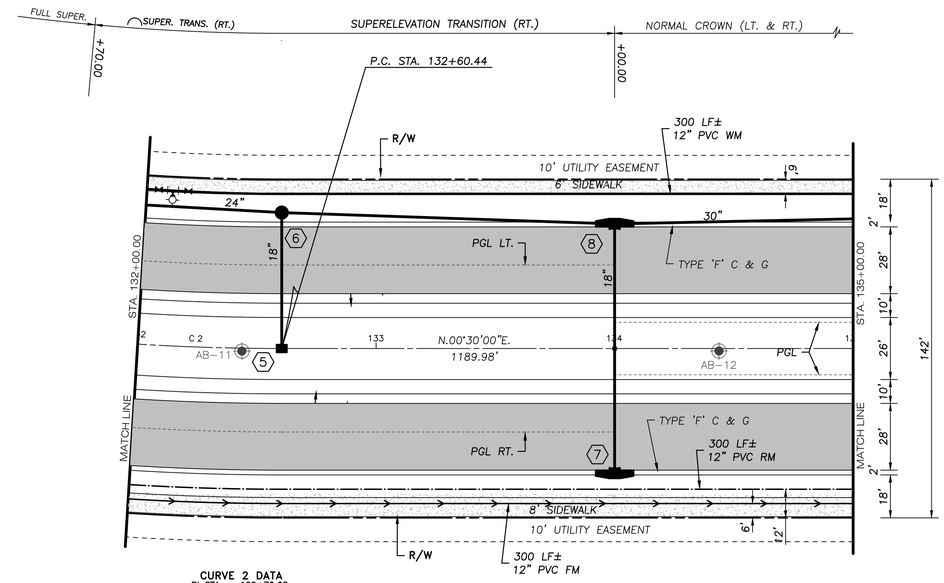

CURVE 2 DATA
PI STA. = 129+79.08
Δ = 33°33'42"
D = 05°47'15"
T = 298.54
L = 579.91
R = 990.00
LC = 571.65
CB = N.17°16'51"E.
PC STA. = 126+80.54
PT STA. = 132+60.44
e = R.C.

BEXLEY BOULEVARD SCALE: 1" = 3' VERTICAL 1" = 30' HORIZONTAL

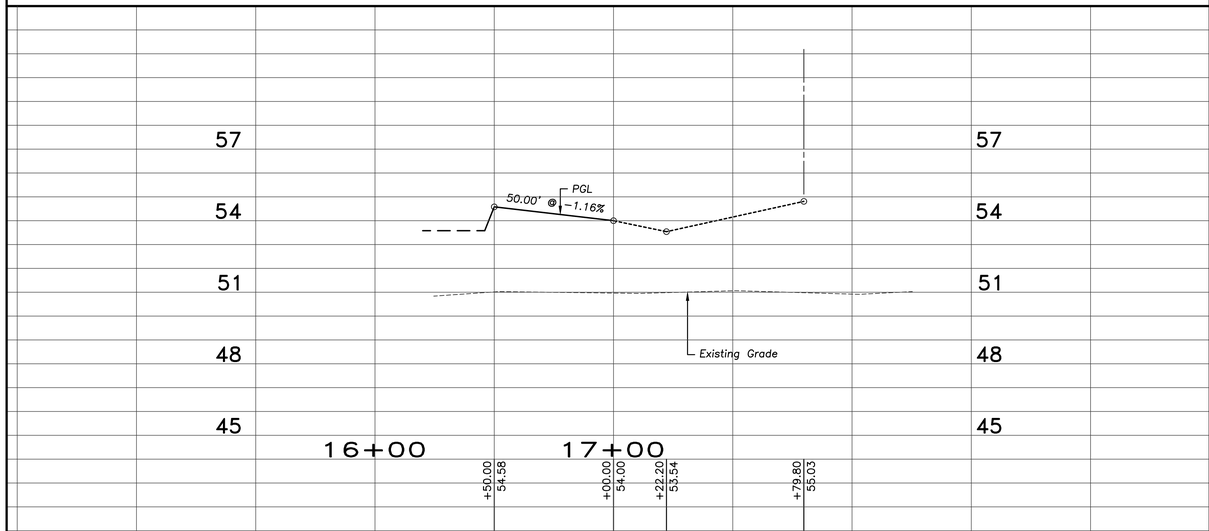

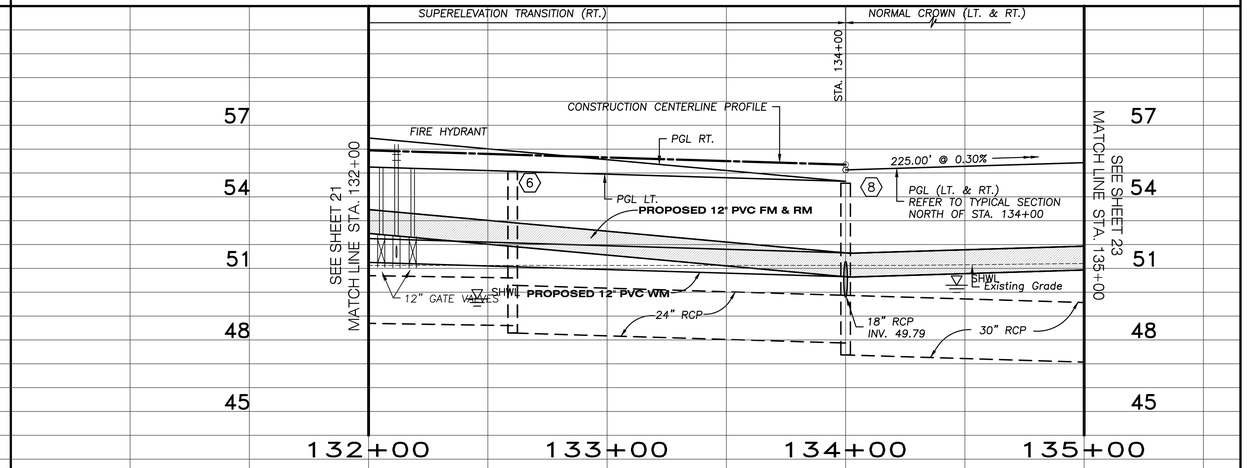

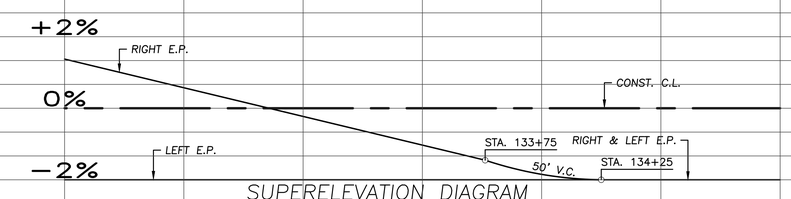

SUPERELEVATION DIAGRAM

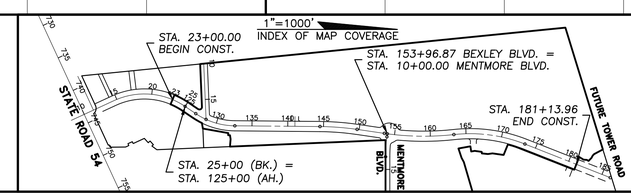

DATE	DESCRIPTION	BY
	REVISIONS	

CLEARVIEW LAND DESIGN, P.L.
Engineering Business C.A. No.: 28858
1213 E. 6th Avenue, Tampa, Florida 33605
Office: 813-223-3919 Fax: 813-223-3975

DATE:
JORDAN A. SCHRADER P.E. NO. 74798
FLORIDA PROFESSIONAL ENGINEER

ROADWAY & UTILITY PLAN & PROFILE

JOB NO.	NLC-BX-015
DESIGN	SMIRCH
DRAWN	SMIRCH
DATE	08/28/2014
FILE	RP03

BEXLEY BOULEVARD 1ST EXTENSION

PREPARED FOR: NNP-BEXLEY, LLC

Elevations based on North American Vertical Datum 1988 (NAVD 88)
Conversion from NAVD 88 to NGVD 29 = +0.83 Feet

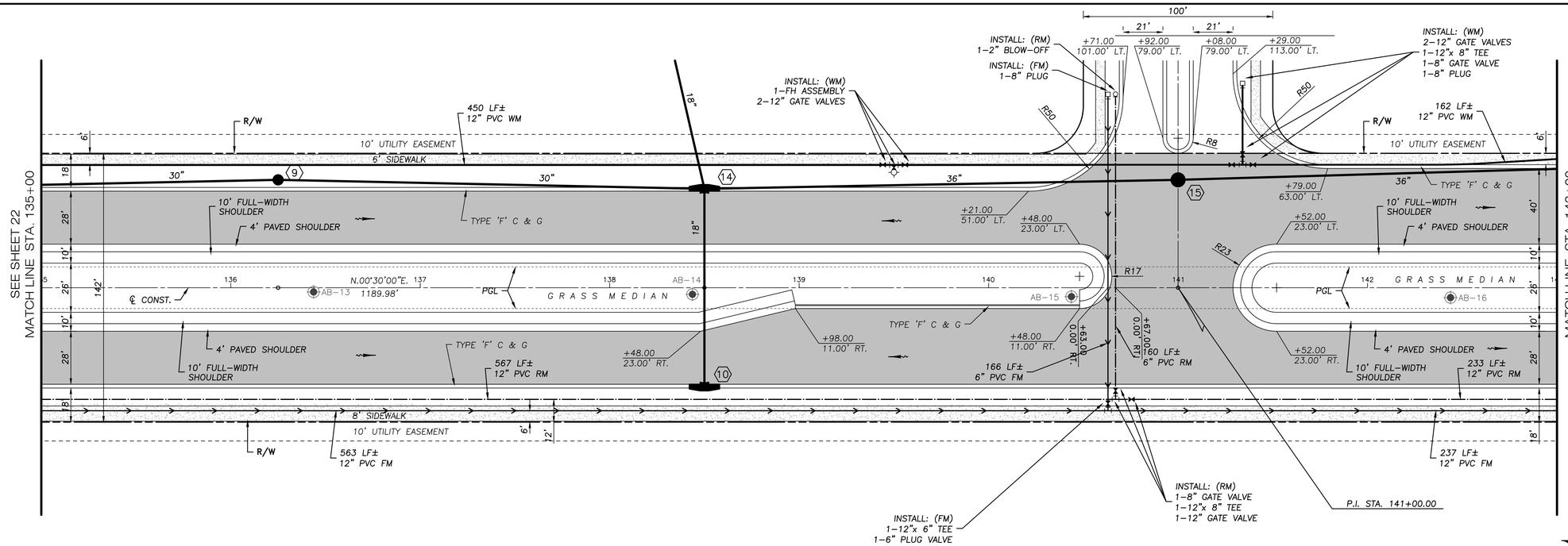

BEXLEY BOULEVARD

SCALE: 1" = 3' VERTICAL
1" = 30' HORIZONTAL

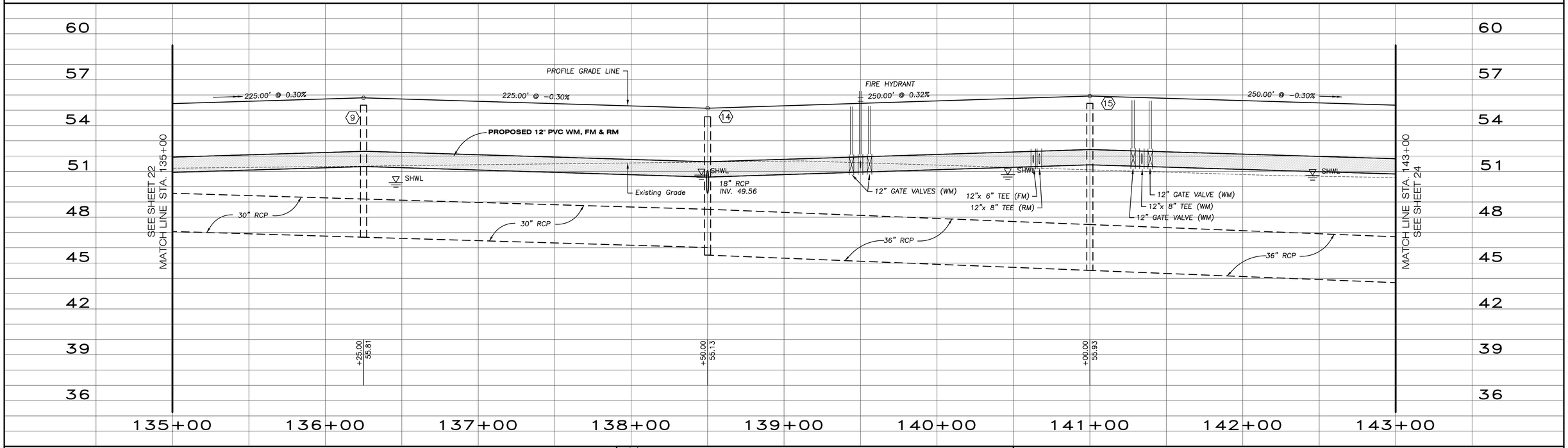

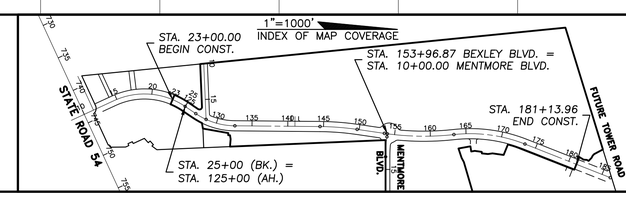

DATE	DESCRIPTION	BY
	REVISIONS	

CLEARVIEW LAND DESIGN, P.L.
Engineering Business C.A. No.: 28858
1213 E. 6th Avenue, Tampa, Florida 33605
Office: 813-223-3919 Fax: 813-223-3975

DATE:
JORDAN A. SCHRADER P.E. NO. 74798
FLORIDA PROFESSIONAL ENGINEER

ROADWAY & UTILITIES PLAN & PROFILE

JOB NO. NLC-BX-015
DESIGN SMIRCH
DRAWN FINNEY
DATE 08/28/2014
FILE RP04

BEXLEY BOULEVARD 1ST EXTENSION

PREPARED FOR: **NNP-BEXLEY, LLC**

Elevations based on North American Vertical Datum 1988 (NAVD 88)
Conversion from NAVD 88 to NGVD 29 = +0.83 Feet

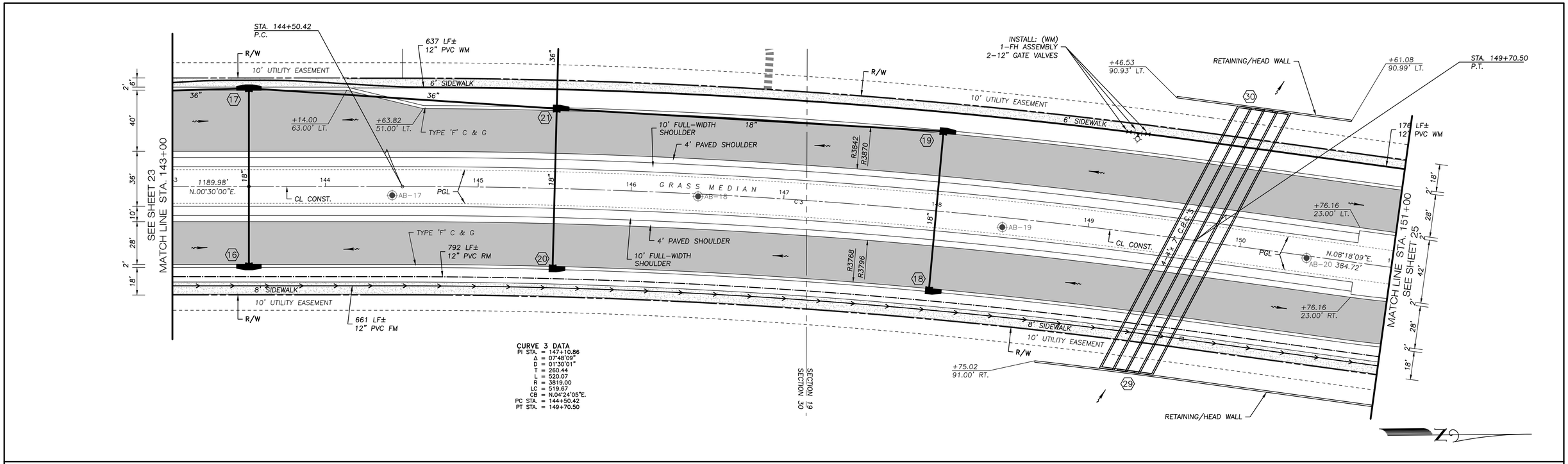

BEXLEY BOULEVARD

SCALE: 1" = 3' VERTICAL
1" = 30' HORIZONTAL

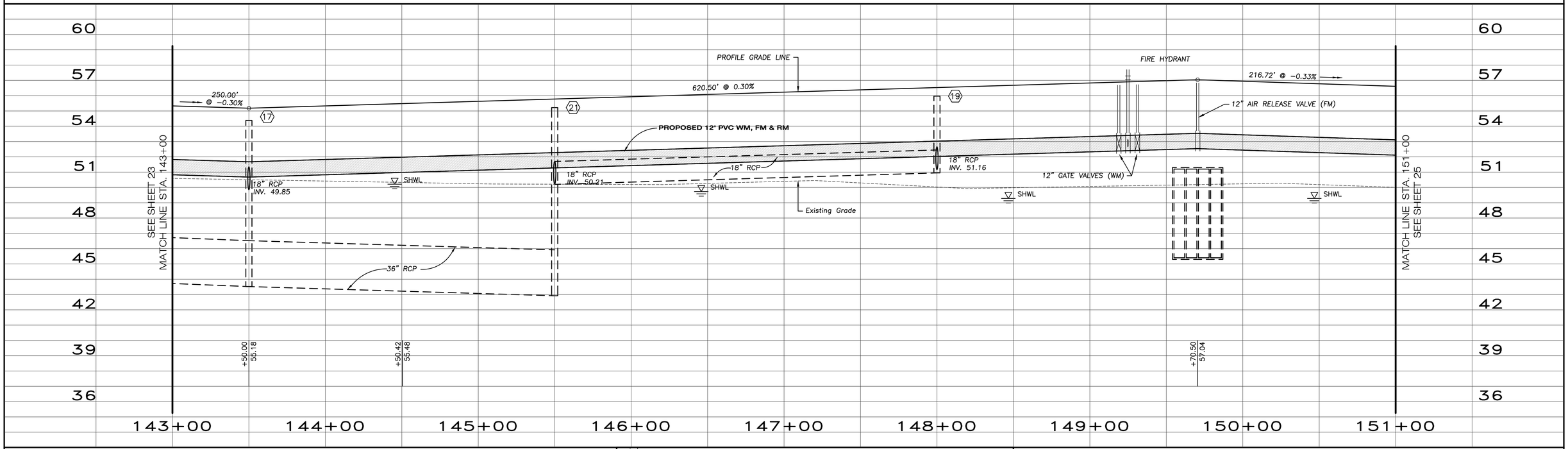

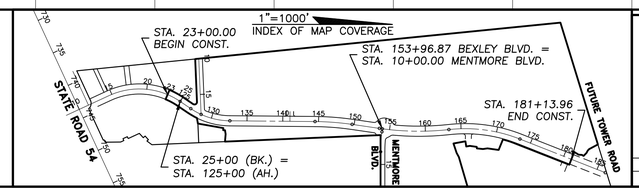

DATE	DESCRIPTION	BY
	REVISIONS	

CLEARVIEW LAND DESIGN, P.L.
Engineering Business C.A. No.: 28858
1213 E. 6th Avenue, Tampa, Florida 33605
Office: 813-223-3919 Fax: 813-223-3975

DATE:
JORDAN A. SCHRADER P.E. NO. 74798
FLORIDA PROFESSIONAL ENGINEER

ROADWAY & UTILITIES PLAN & PROFILE

JOB NO. NLC-BX-015	BEXLEY BOULEVARD 1ST EXTENSION
DESIGN SMIRCH	
DRAWN SMIRCH	PREPARED FOR: NNP-BEXLEY, LLC
DATE 08/28/2014	Elevations based on North American Vertical Datum 1988 (NAVD 88) Conversion from NAVD 88 to NGVD 29 = +0.83 Feet
FILE RP05	SHEET 24 OF 46 SHEETS

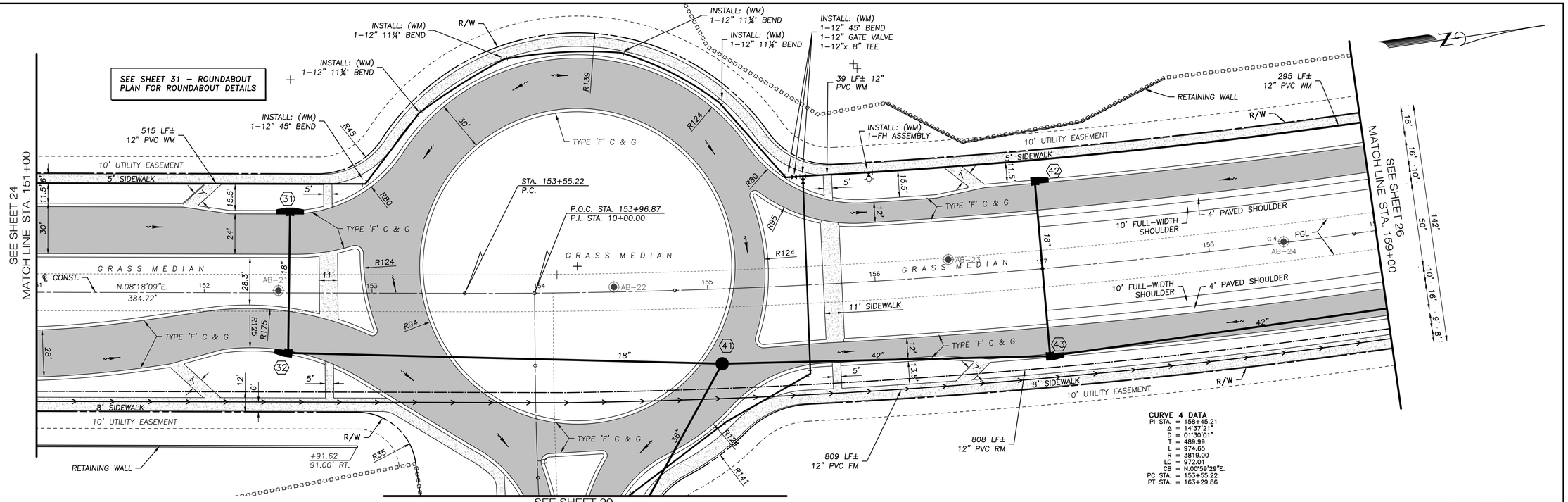

CURVE 4 DATA
PI STA. = 158+45.21
Δ = 14°37'21"
D = 01°30'01"
T = 489.99
L = 974.65
R = 3819.00
LC = 972.01
CB = N.00°59'29"E.
PC STA. = 153+55.22
PT STA. = 163+29.86

BEXLEY BOULEVARD

SCALE: 1" = 3' VERTICAL
1" = 30' HORIZONTAL

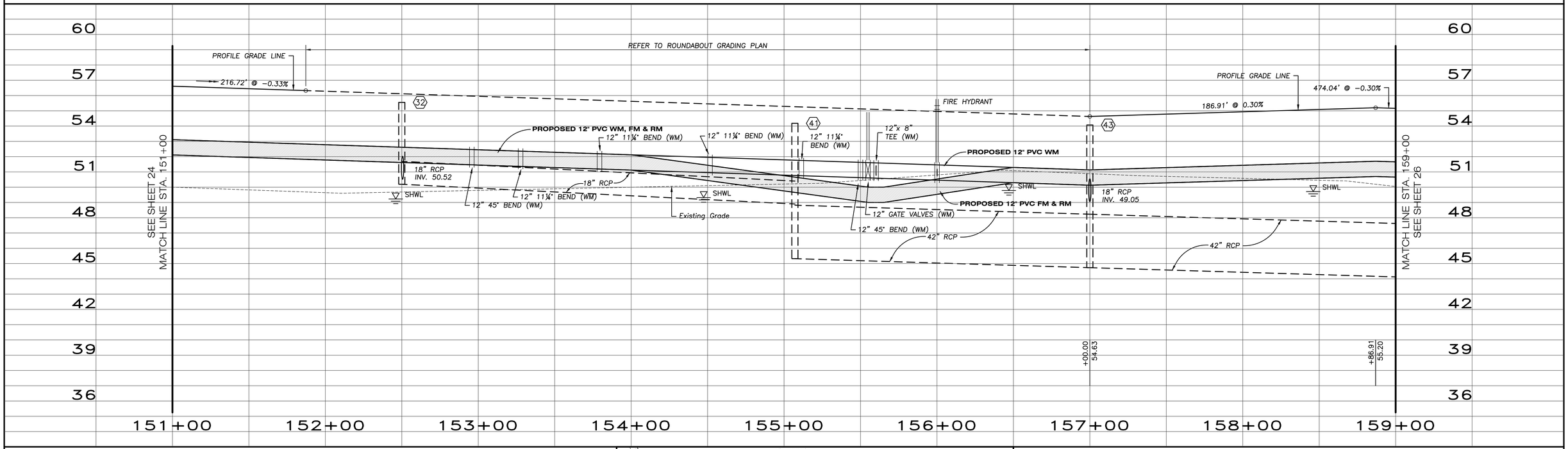

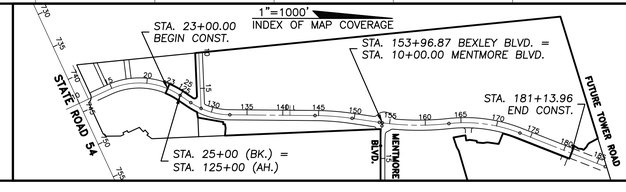

DATE	DESCRIPTION	BY
	REVISIONS	

CLEARVIEW LAND DESIGN, P.L.
Engineering Business C.A. No.: 28858
1213 E. 6th Avenue, Tampa, Florida 33605
Office: 813–223–3919 Fax: 813–223–3975

DATE:
JORDAN A. SCHRADER P.E. NO. 74798
FLORIDA PROFESSIONAL ENGINEER

ROADWAY & UTILITIES PLAN & PROFILE

JOB NO. NLC–BX–015	BEXLEY BOULEVARD 1ST EXTENSION
DESIGN SMIRCH	
DRAWN MS/TF	PREPARED FOR: NNP-BEXLEY, LLC
DATE 08/28/2014	Elevations based on North American Vertical Datum 1988 (NAVD 88) Conversion from NAVD 88 to NGVD 29 = +0.83 Feet
FILE RP06	SHEET 25 OF 46 SHEETS

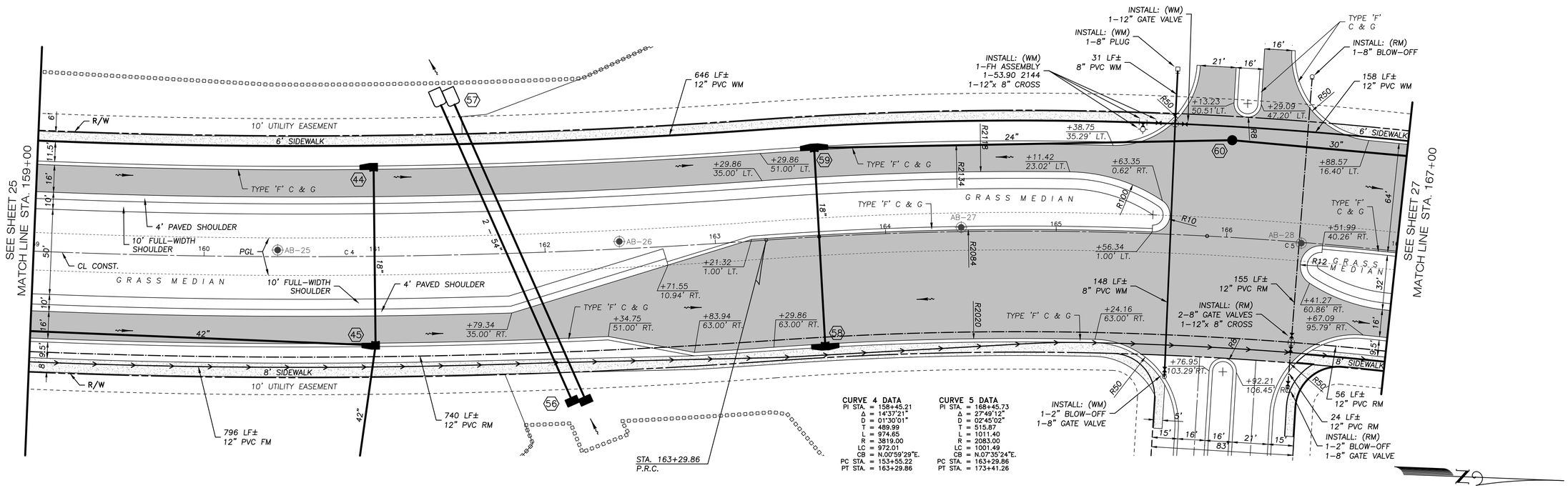

CURVE 4 DATA
PI STA. = 158+45.21
Δ = 14°37'21"
D = 01°30'01"
T = 489.99
L = 974.65
R = 3819.00
LC = 972.01
CB = N.00°59'29"E.
PC STA. = 153+55.22
PT STA. = 163+29.86

CURVE 5 DATA
PI STA. = 168+45.73
Δ = 27°49'12"
D = 02°45'02"
T = 515.87
L = 1011.40
R = 2083.00
LC = 1001.49
CB = N.07°35'24"E.
PC STA. = 163+29.86
PT STA. = 173+41.26

BEXLEY BOULEVARD

SCALE: 1" = 3' VERTICAL
1" = 30' HORIZONTAL

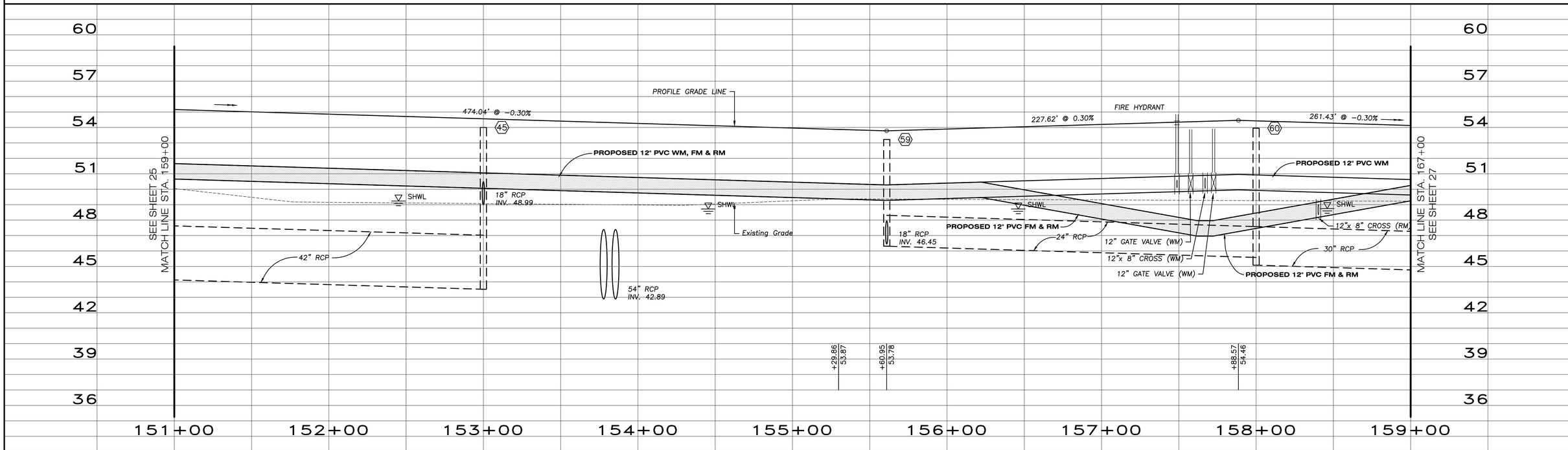

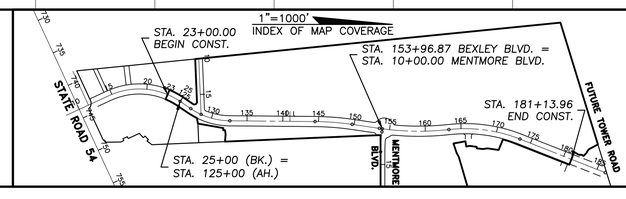

DATE	DESCRIPTION	BY
	REVISIONS	

CLEARVIEW LAND DESIGN, P.L.
Engineering Business C.A. No.: 28858
1213 E. 6th Avenue, Tampa, Florida 33605
Office: 813-223-3919 Fax: 813-223-3975

DATE:
JORDAN A. SCHRADER P.E. NO. 74798
FLORIDA PROFESSIONAL ENGINEER

ROADWAY & UTILITIES PLAN & PROFILE

JOB NO. NLC-BX-015
DESIGN SMIRCH
DRAWN MS/TF
DATE 08/28/2014
FILE RP07

BEXLEY BOULEVARD 1ST EXTENSION

PREPARED FOR: **NNP-BEXLEY, LLC**

Elevations based on North American Vertical Datum 1988 (NAVD 88)
Conversion from NAVD 88 to NGVD 29 = +0.83 Feet

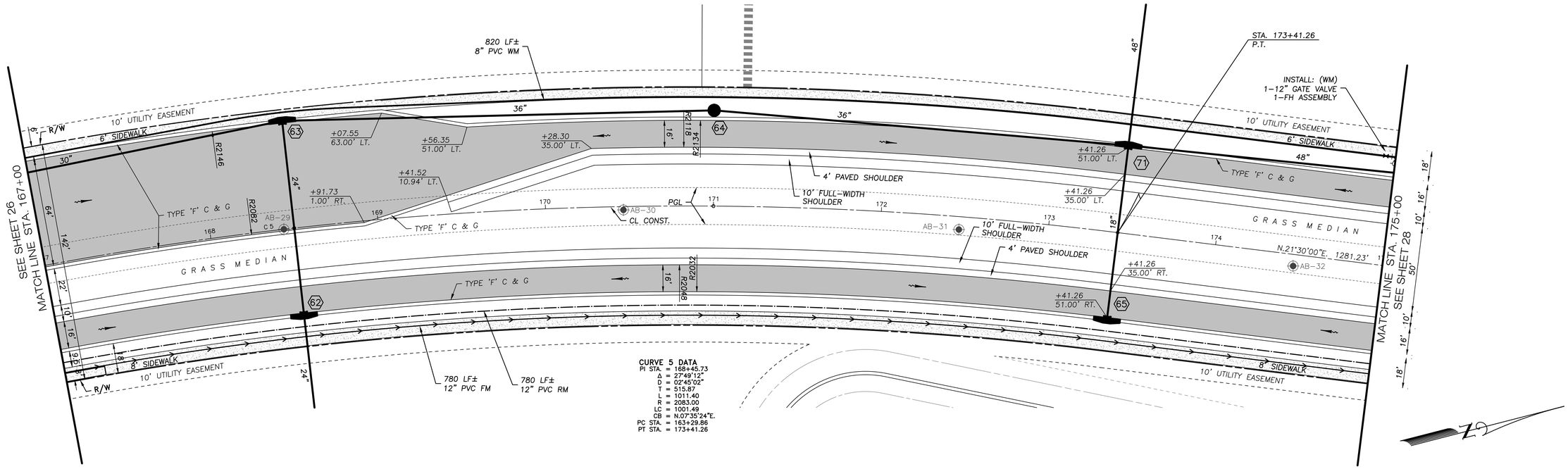

BEXLEY BOULEVARD

SCALE: 1" = 3' VERTICAL
1" = 30' HORIZONTAL

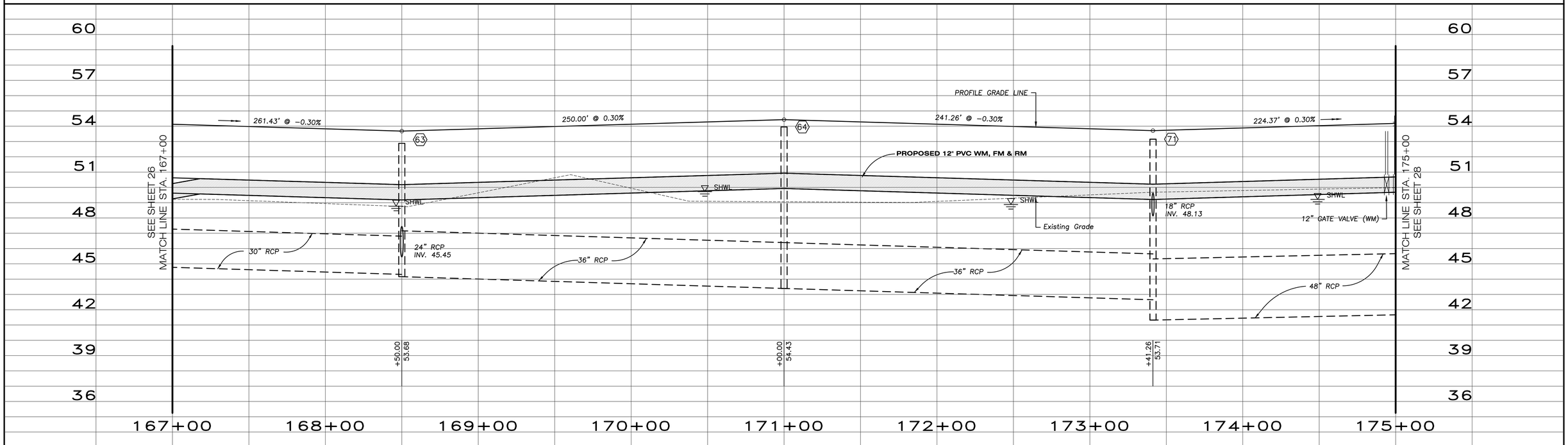

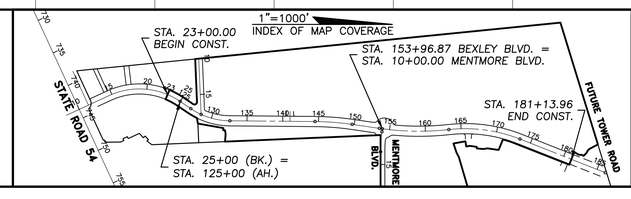

DATE	DESCRIPTION	BY
	REVISIONS	

CLEARVIEW LAND DESIGN, P.L.
Engineering Business C.A. No.: 28858
1213 E. 6th Avenue, Tampa, Florida 33605
Office: 813-223-3919 Fax: 813-223-3975

DATE:
JORDAN A. SCHRADER P.E. NO. 74798
FLORIDA PROFESSIONAL ENGINEER

ROADWAY & UTILITIES PLAN & PROFILE

JOB NO. NLC-BX-015	BEXLEY BOULEVARD 1ST EXTENSION
DESIGN SMIRCH	
DRAWN MS/TF	PREPARED FOR: NNP-BEXLEY, LLC
DATE 08/28/2014	Elevations based on North American Vertical Datum 1988 (NAVD 88) Conversion from NAVD 88 to NGVD 29 = +0.83 Feet
FILE RP08	SHEET 27 OF 46 SHEETS

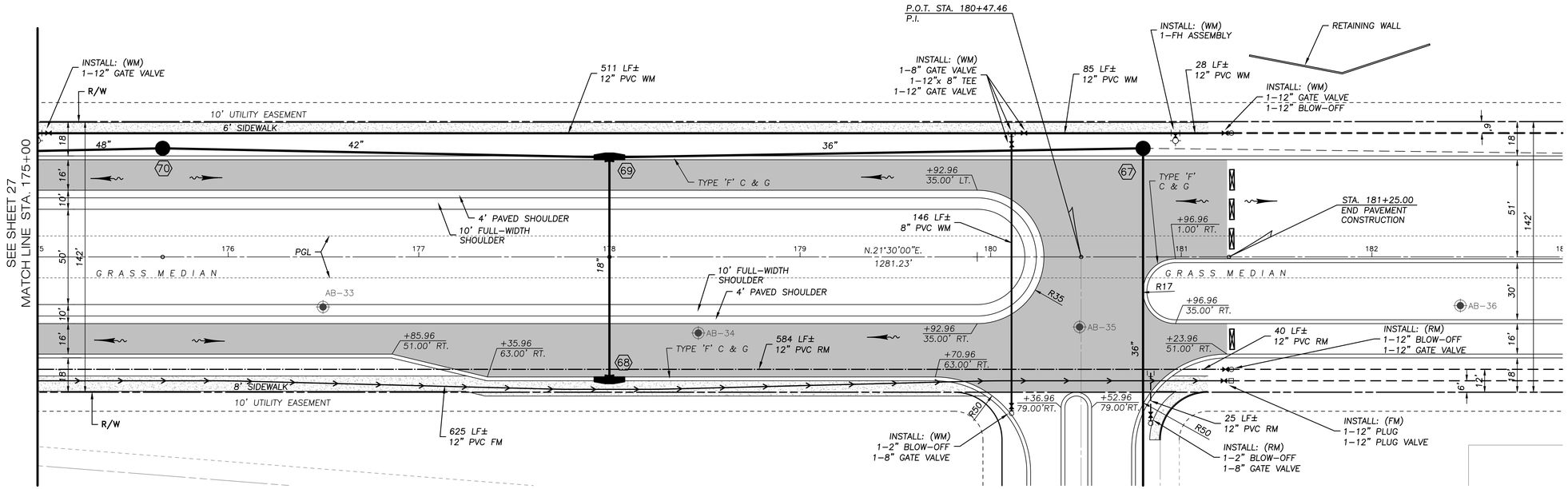

BEXLEY BOULEVARD

SCALE: 1" = 3' VERTICAL
1" = 30' HORIZONTAL

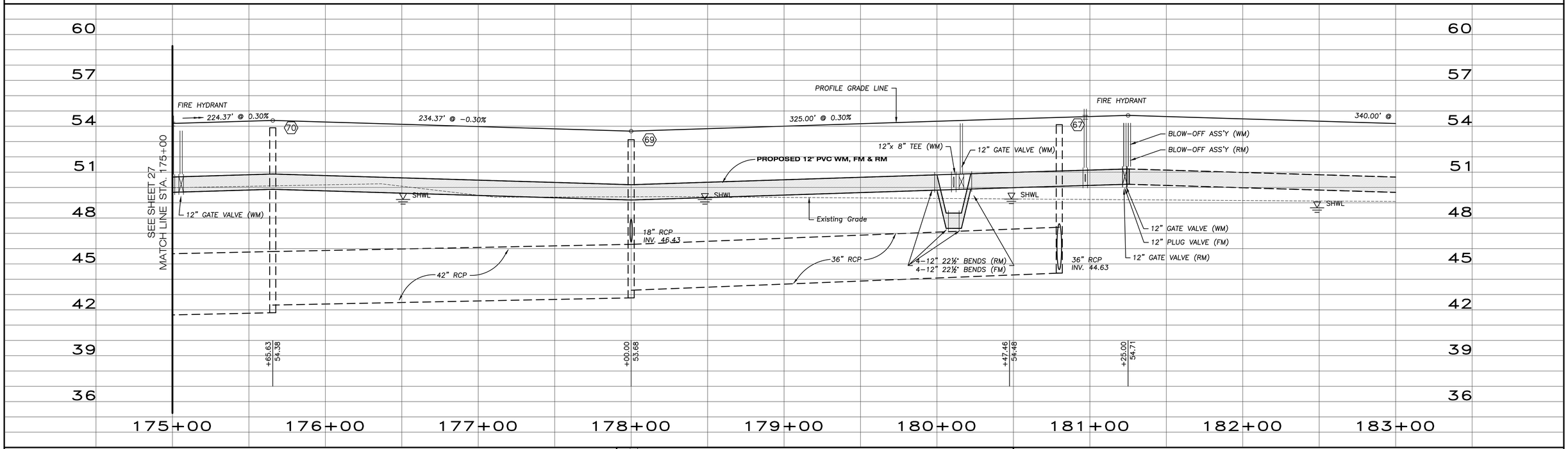

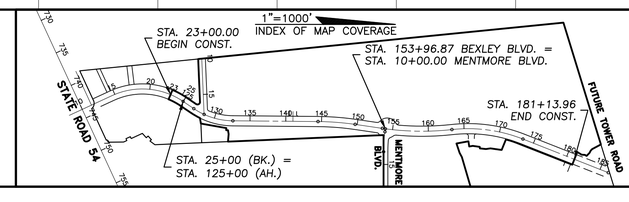

DATE	DESCRIPTION	BY
	REVISIONS	

CLEARVIEW LAND DESIGN, P.L.
Engineering Business C.A. No.: 28858
1213 E. 6th Avenue, Tampa, Florida 33605
Office: 813-223-3919 Fax: 813-223-3975

DATE:
JORDAN A. SCHRADER P.E. NO. 74798
FLORIDA PROFESSIONAL ENGINEER

ROADWAY & UTILITIES PLAN & PROFILE

JOB NO. NLC-BX-015
DESIGN SMIRCH
DRAWN MS/TF
DATE 08/28/2014
FILE RP09

BEXLEY BOULEVARD 1ST EXTENSION

PREPARED FOR: **NNP-BEXLEY, LLC**

Elevations based on North American Vertical Datum 1988 (NAVD 88)
Conversion from NAVD 88 to NGVD 29 = +0.83 Feet

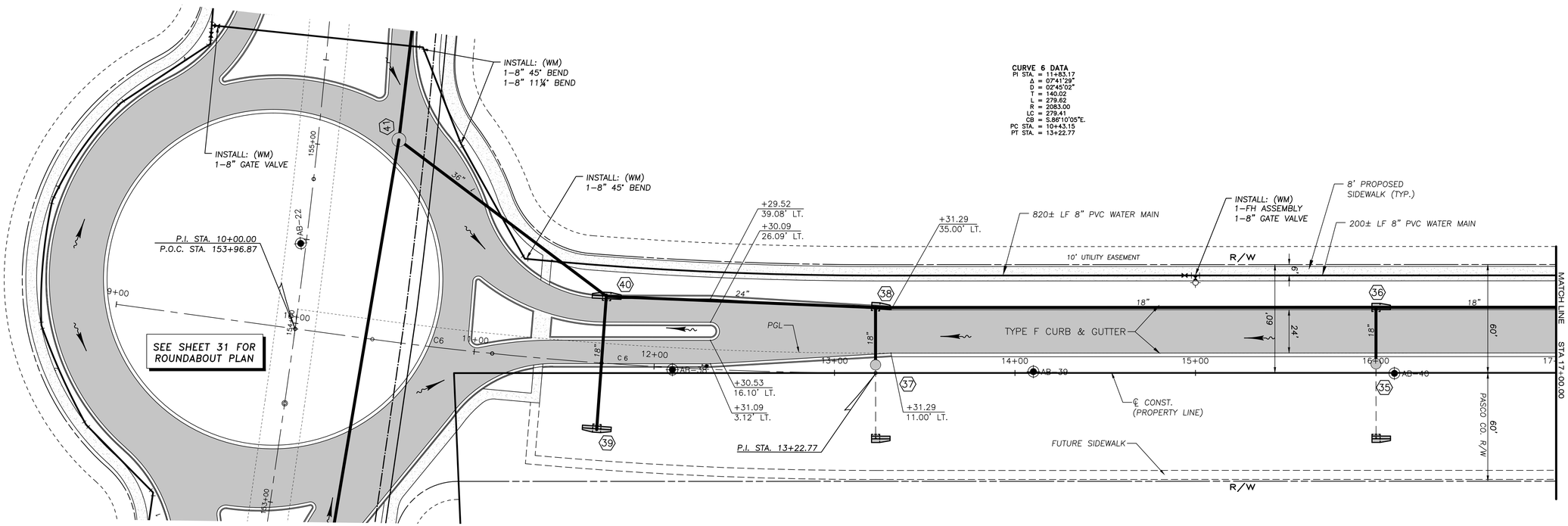

MENTMORE BOULEVARD

SCALE: 1" = 3' VERTICAL
1" = 30' HORIZONTAL

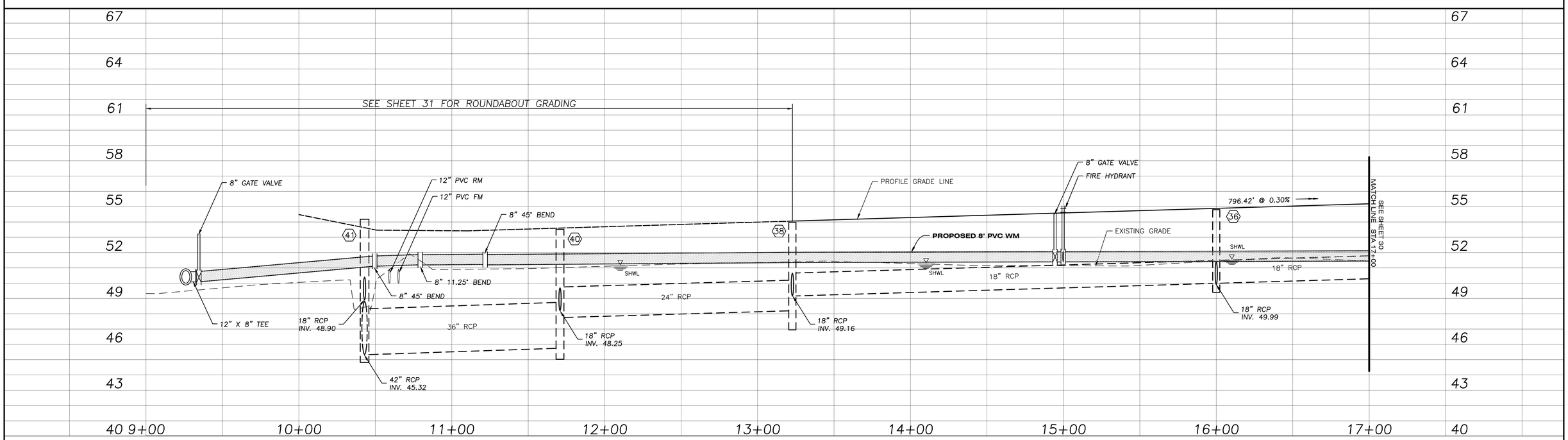

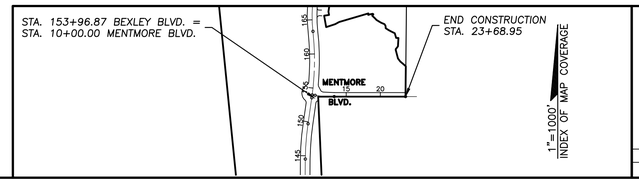

DATE	DESCRIPTION	BY
	REVISIONS	

CLEARVIEW LAND DESIGN, P.L.
Engineering Business C.A. No.: 28858
1213 E. 6th Avenue, Tampa, Florida 33605
Office: 813-223-3919 Fax: 813-223-3975

DATE:
JORDAN A. SCHRADER P.E. NO. 74798
FLORIDA PROFESSIONAL ENGINEER

ROADWAY & UTILITY PLAN & PROFILE

JOB NO. NLC-BX-015	BEXLEY BOULEVARD 1ST EXTENSION
DESIGN SMIRCH	
DRAWN FINNEY	PREPARED FOR: NNP-BEXLEY, LLC
DATE 06-01-2014	Elevations based on North American Vertical Datum 1988 (NAVD 88) Conversion from NAVD 88 to NGVD 29 = +0.83 Feet
FILE RP12	SHEET 29 OF 46 SHEETS

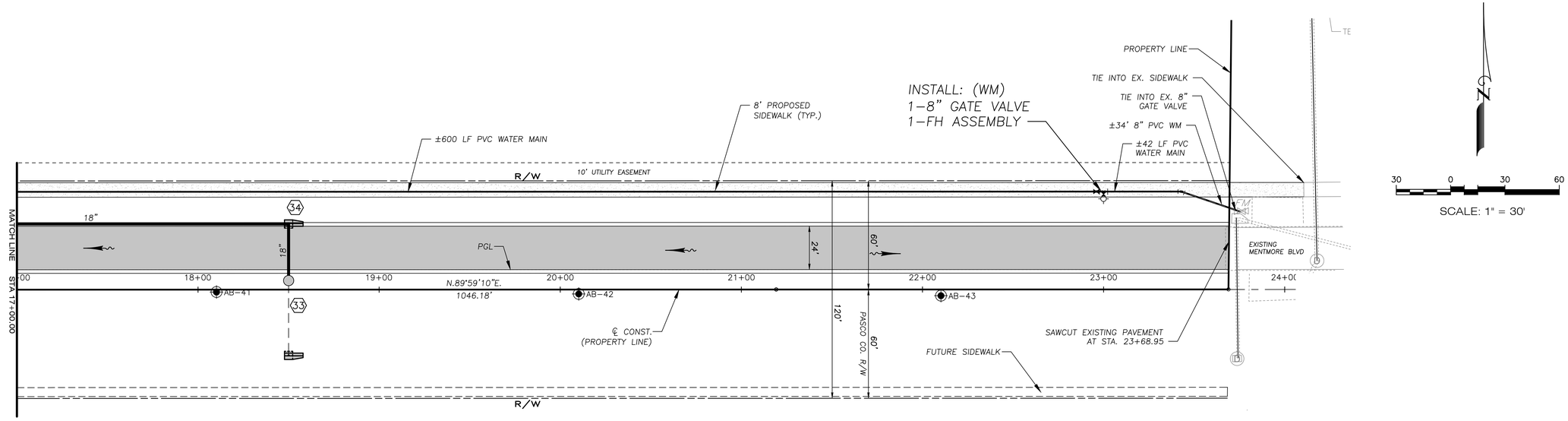

MENTMORE BOULEVARD

SCALE: 1" = 3' VERTICAL
1" = 30' HORIZONTAL

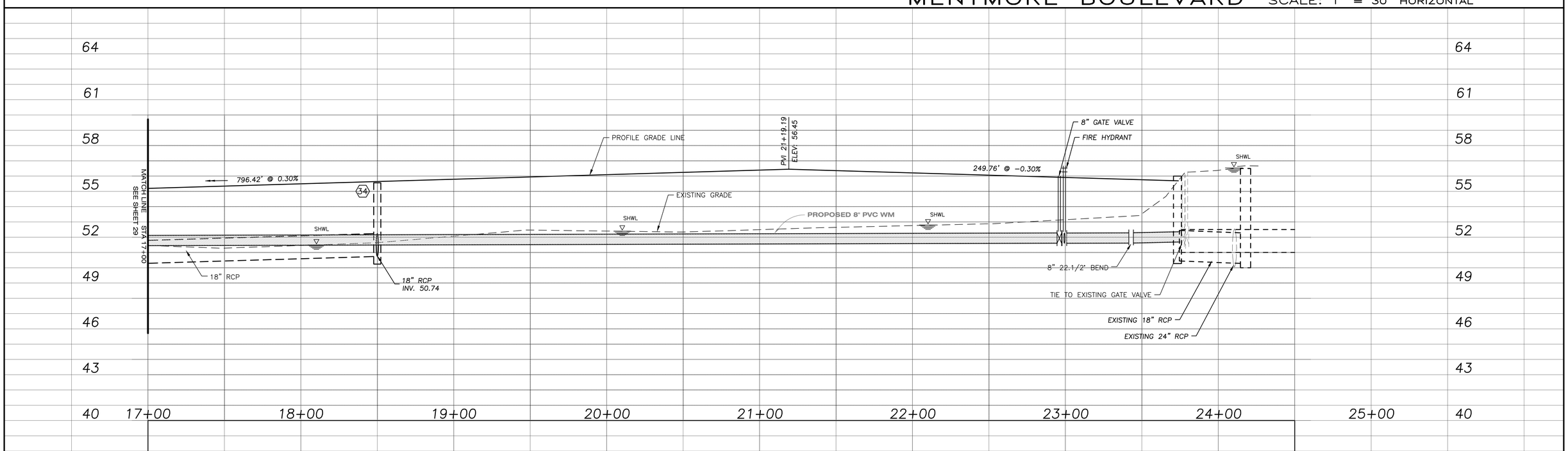

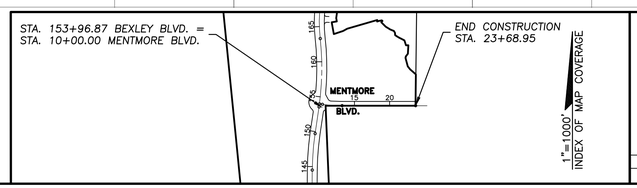

DATE	DESCRIPTION	BY
	REVISIONS	

CLEARVIEW LAND DESIGN, P.L.
Engineering Business C.A. No.: 28858
1213 E. 6th Avenue, Tampa, Florida 33605
Office: 813-223-3919 Fax: 813-223-3975

DATE:
JORDAN A. SCHRADER P.E. NO. 74798
FLORIDA PROFESSIONAL ENGINEER

ROADWAY & UTILITY PLAN & PROFILE

JOB NO. NLC-BX-015	BEXLEY BOULEVARD 1ST EXTENSION
DESIGN SMIRCH	
DRAWN FINNEY	PREPARED FOR: NNP-BEXLEY, LLC
DATE 06-01-2014	Elevations based on North American Vertical Datum 1988 (NAVD 88) Conversion from NAVD 88 to NGVD 29 = +0.83 Feet
FILE RP13	SHEET 30 OF 46 SHEETS

CURVE 4 DATA
PI STA. = 158+45.21
Δ = 14°37'21"
D = 01°30'01"
T = 489.99
L = 974.65
R = 3819.00
LC = 972.01
CB = N.00°59'29"E.
PC STA. = 153+55.22
PT STA. = 163+29.86

CURVE 6 DATA
PI STA. = 11+83.17
Δ = 07°41'29"
D = 02°45'02"
T = 140.02
L = 279.62
R = 2083.00
LC = 279.41
CB = S.86°10'05"E.
PC STA. = 10+43.15
PT STA. = 13+22.77

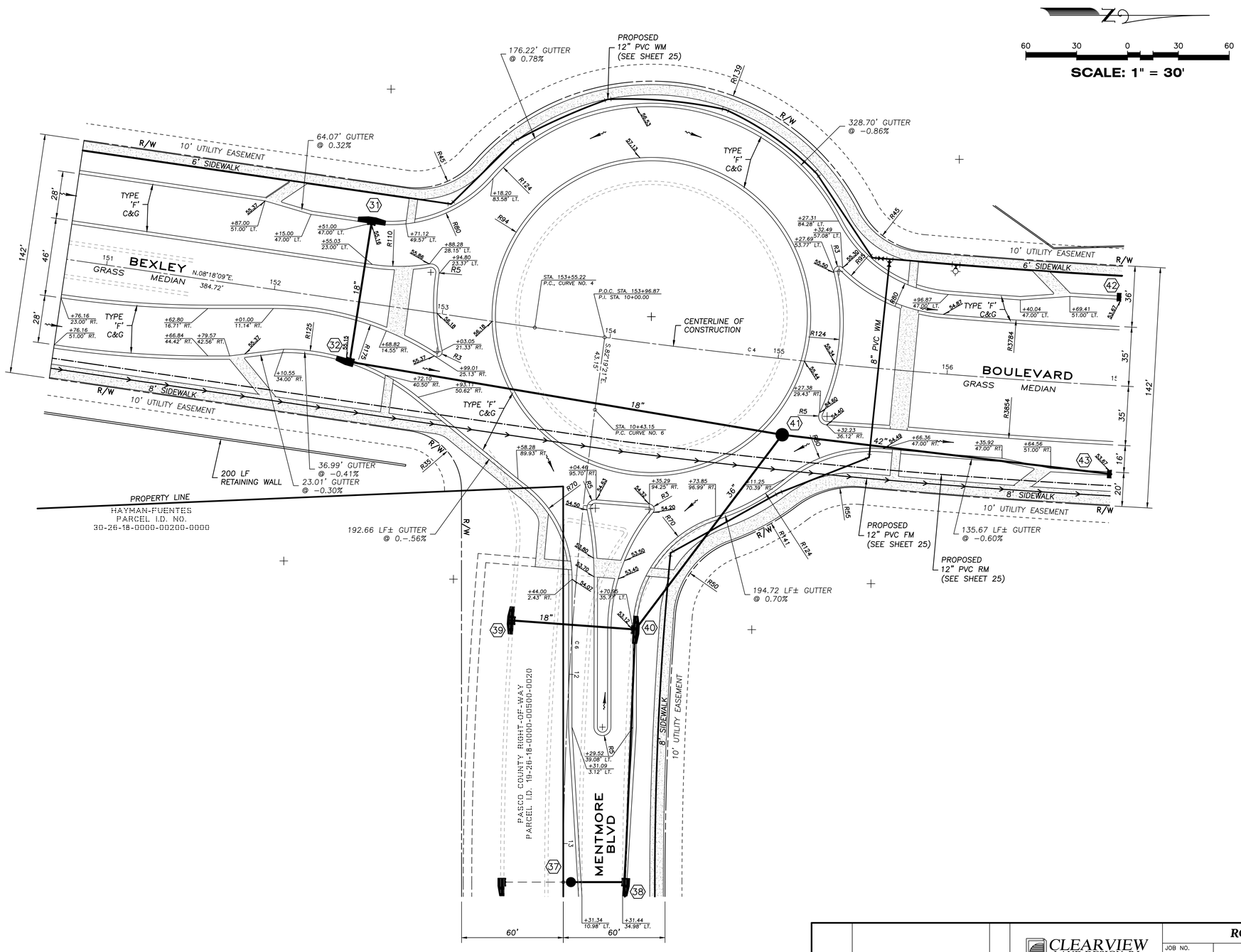

DATE	DESCRIPTION	BY
	REVISIONS	

CLEARVIEW LAND DESIGN, P.L.
Engineering Business C.A. No.: 28858
1213 E. 6th Avenue, Tampa, Florida 33605
Office: 813-223-3919 Fax: 813-223-3975

DATE:
JORDAN A. SCHRADER P.E. NO. 74798
FLORIDA PROFESSIONAL ENGINEER

ROUNDABOUT PLAN

JOB NO. NLC-BX-015
DESIGN SMIRCH
DRAWN FINNEY
DATE 08/28/2014
FILE ROUNDABOUT

BEXLEY BOULEVARD 1ST EXTENSION

PREPARED FOR: **NNP-BEXLEY, LLC**

Elevations based on North American Vertical Datum 1988 (NAVD 88) Conversion from NAVD 88 to NGVD 29 = +0.83 Feet

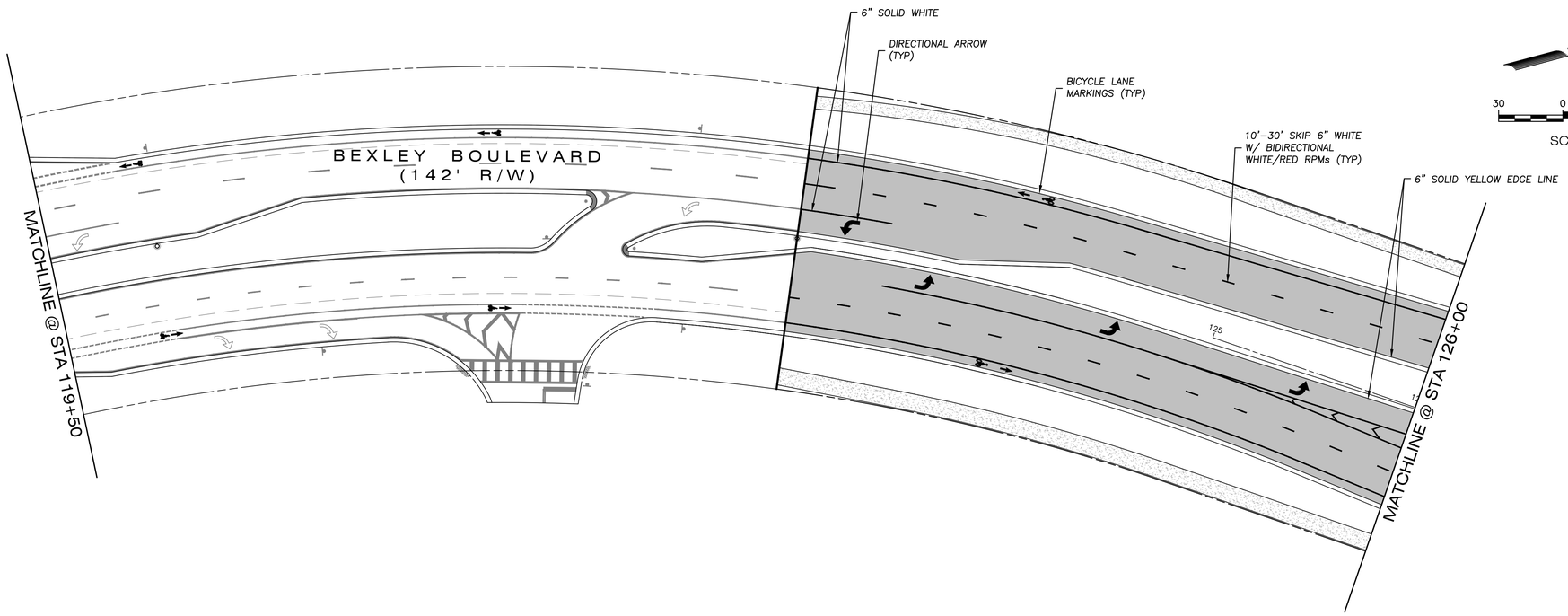

LEGEND

- PROPOSED PAVEMENT
- PROPOSED SIDEWALK
- SIGN & POST (FACE OF SIGN, POST)
- SIGN ON BOTH SIDE OF POST (FACE OF SIGN, POST, FACE OF SIGN)

STANDARD NOTES (PRIVATE ROADWAYS):

1. *ALL TRAFFIC CONTROL DEVICES SHALL BE INSTALLED IN CONFORMANCE WITH THE FEDERAL MANUAL ON UNIFORM TRAFFIC CONTROL DEVICES AND FLORIDA DEPARTMENT OF TRANSPORTATION STANDARDS.*
2. *CONTRACTOR MUST CONTACT ENGINEER OF RECORD PRIOR TO ORDERING STREET NAME SIGNS. APPROVED STREET NAMES CAN NOT BE DETERMINED UNTIL RECORDING OF THE PLAT.*
3. *EXISTING STRIPING AND OTHER PAVEMENT MARKINGS TO BE REMOVED SHALL BE DONE AS NECESSARY BY HYDROBLASTING. GRINDING IS NOT PERMITTED.*
4. *SIDEWALK CLEAR ZONE SHALL BE FREE OF OBSTACLES, THIS INCLUDES SHRUBS, TREES, FENCES, ABOVE GROUND UTILITIES I.E. POWER POLES, STREET LIGHTS, GUY ANCHORS, FIRE HYDRANTS, MAIL BOXES, STREET SIGNS AND UTILITY MARKERS ETC.*
5. *SEE CHART ON DETAIL SHEET 46 FOR SIGN SIZE.*

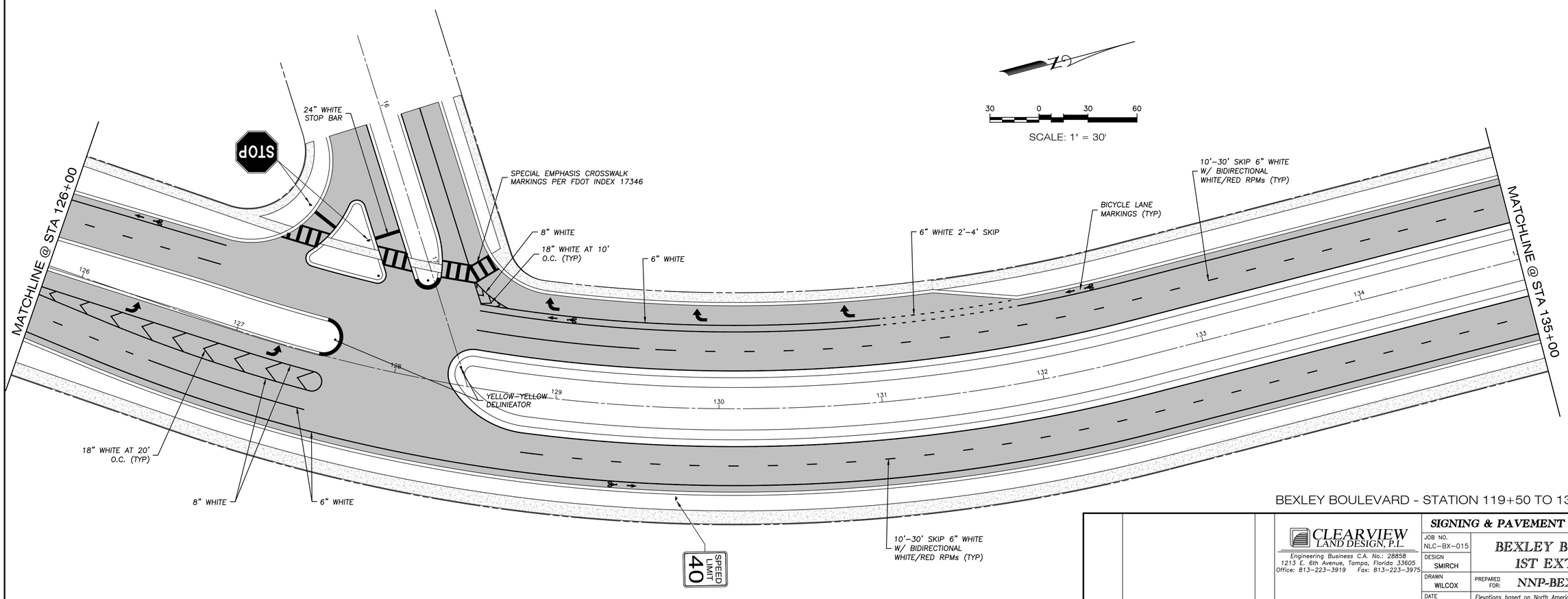

BEXLEY BOULEVARD - STATION 119+50 TO 135+00

DATE	DESCRIPTION	BY
	REVISIONS	

CLEARVIEW LAND DESIGN, P.L.
Engineering Business C.A. No.: 28858
1213 E. 6th Avenue, Tampa, Florida 33605
Office: 813-223-3919 Fax: 813-223-3975

DATE:
JORDAN A. SCHRADER P.E. NO. 74798
FLORIDA PROFESSIONAL ENGINEER

SIGNING & PAVEMENT MARKING PLAN

JOB NO. NLC-BX-015	BEXLEY BOULEVARD 1ST EXTENSION
DESIGN SMIRCH	
DRAWN WILCOX	PREPARED FOR: NNP-BEXLEY, LLC
DATE 06-01-2014	Elevations based on North American Vertical Datum 1988 (NAVD 88) Conversion from NAVD 88 to NGVD 29 = +0.83 Feet
FILE SPM1	SHEET 32 OF 46 SHEETS

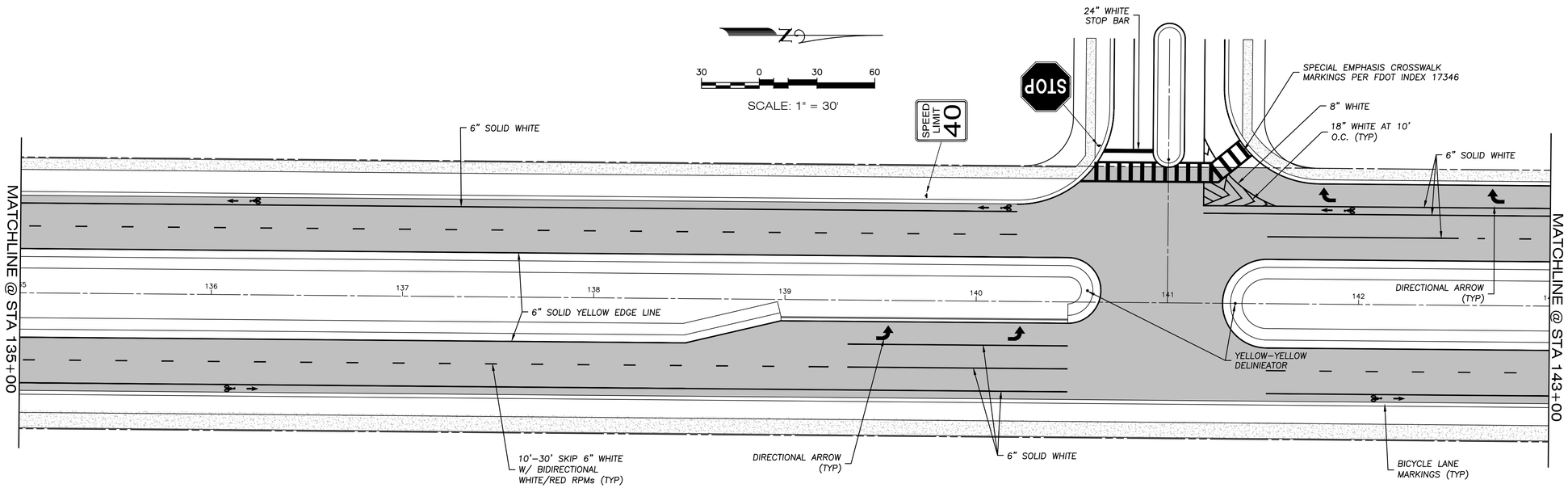

LEGEND

- PROPOSED PAVEMENT
- PROPOSED SIDEWALK
- SIGN & POST (FACE OF SIGN, POST)
- SIGN ON BOTH SIDE OF POST (FACE OF SIGN, POST, FACE OF SIGN)

STANDARD NOTES (PRIVATE ROADWAYS):

1. ALL TRAFFIC CONTROL DEVICES SHALL BE INSTALLED IN CONFORMANCE WITH THE FEDERAL MANUAL ON UNIFORM TRAFFIC CONTROL DEVICES AND FLORIDA DEPARTMENT OF TRANSPORTATION STANDARDS.
2. CONTRACTOR MUST CONTACT ENGINEER OF RECORD PRIOR TO ORDERING STREET NAME SIGNS. APPROVED STREET NAMES CAN NOT BE DETERMINED UNTIL RECORDING OF THE PLAT.
3. EXISTING STRIPING AND OTHER PAVEMENT MARKINGS TO BE REMOVED SHALL BE DONE AS NECESSARY BY HYDROBLASTING. GRINDING IS NOT PERMITTED.
4. SIDEWALK CLEAR ZONE SHALL BE FREE OF OBSTACLES, THIS INCLUDES SHRUBS, TREES, FENCES, ABOVE GROUND UTILITIES I.E. POWER POLES, STREET LIGHTS, GUY ANCHORS, FIRE HYDRANTS, MAIL BOXES, STREET SIGNS AND UTILITY MARKERS ETC.
5. SEE CHART ON DETAIL SHEET 46 FOR SIGN SIZE.

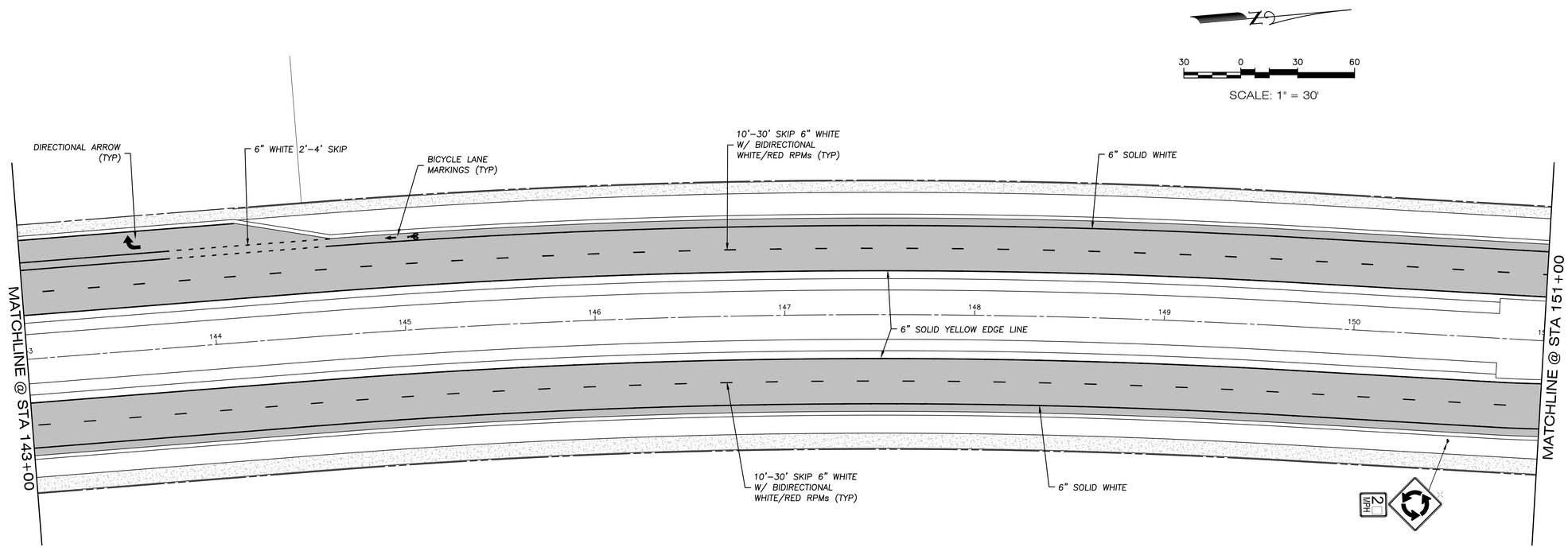

BEXLEY BOULEVARD - STATION 135+00 TO 151+00

DATE	DESCRIPTION	BY
	REVISIONS	

CLEARVIEW LAND DESIGN, P.L.
Engineering Business C.A. No.: 28858
1213 E. 6th Avenue, Tampa, Florida 33605
Office: 813-223-3919 Fax: 813-223-3975

DATE:
JORDAN A. SCHRADER P.E. NO. 74798
FLORIDA PROFESSIONAL ENGINEER

SIGNING & PAVEMENT MARKING PLAN

JOB NO. NLC-BX-015	BEXLEY BOULEVARD 1ST EXTENSION
DESIGN SMIRCH	
DRAWN WILCOX	PREPARED FOR: NNP-BEXLEY, LLC
DATE 06-01-2014	Elevations based on North American Vertical Datum 1988 (NAVD 88) Conversion from NAVD 88 to NGVD 29 = +0.83 Feet
FILE SPM2	SHEET 33 OF 46 SHEETS

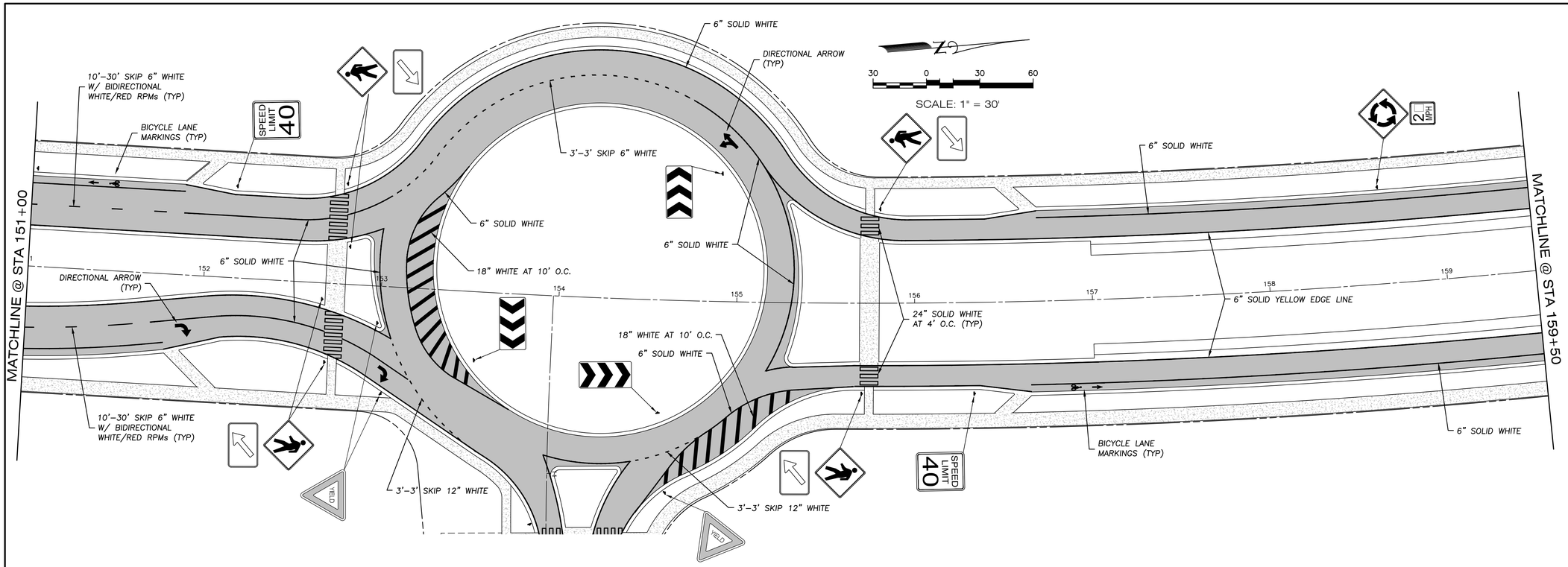

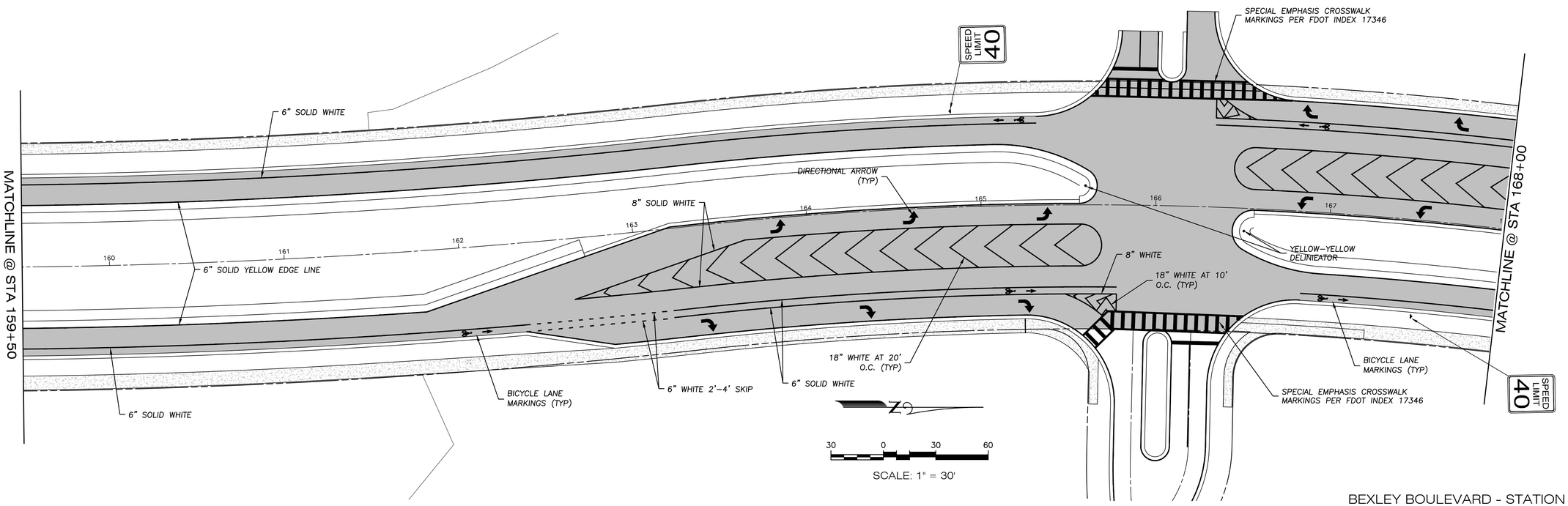

LEGEND

- PROPOSED PAVEMENT
- PROPOSED SIDEWALK
- SIGN & POST (FACE OF SIGN, POST)
- SIGN ON BOTH SIDE OF POST (FACE OF SIGN, POST, FACE OF SIGN)

STANDARD NOTES (PRIVATE ROADWAYS):

1. ALL TRAFFIC CONTROL DEVICES SHALL BE INSTALLED IN CONFORMANCE WITH THE FEDERAL MANUAL ON UNIFORM TRAFFIC CONTROL DEVICES AND FLORIDA DEPARTMENT OF TRANSPORTATION STANDARDS.
2. CONTRACTOR MUST CONTACT ENGINEER OF RECORD PRIOR TO ORDERING STREET NAME SIGNS. APPROVED STREET NAMES CAN NOT BE DETERMINED UNTIL RECORDING OF THE PLAT.
3. EXISTING STRIPING AND OTHER PAVEMENT MARKINGS TO BE REMOVED SHALL BE DONE AS NECESSARY BY HYDROBLASTING. GRINDING IS NOT PERMITTED.
4. SIDEWALK CLEAR ZONE SHALL BE FREE OF OBSTACLES, THIS INCLUDES SHRUBS, TREES, FENCES, ABOVE GROUND UTILITIES I.E. POWER POLES, STREET LIGHTS, GUY ANCHORS, FIRE HYDRANTS, MAIL BOXES, STREET SIGNS AND UTILITY MARKERS ETC.
5. SEE CHART ON DETAIL SHEET 46 FOR SIGN SIZE.

BEXLEY BOULEVARD - STATION 151+00 TO 168+00

DATE	DESCRIPTION	BY
	REVISIONS	

CLEARVIEW LAND DESIGN, P.L.
Engineering Business C.A. No.: 28858
1213 E. 6th Avenue, Tampa, Florida 33605
Office: 813-223-3919 Fax: 813-223-3975
DATE:
JORDAN A. SCHRADER P.E. NO. 74798
FLORIDA PROFESSIONAL ENGINEER

SIGNING & PAVEMENT MARKING PLAN

JOB NO. NLC-BX-015	BEXLEY BOULEVARD 1ST EXTENSION
DESIGN SMIRCH	
DRAWN WILCOX	PREPARED FOR: NNP-BEXLEY, LLC
DATE 06-01-2014	Elevations based on North American Vertical Datum 1988 (NAVD 88) Conversion from NAVD 88 to NGVD 29 = +0.83 Feet
FILE SPM3	SHEET 34 OF 46 SHEETS

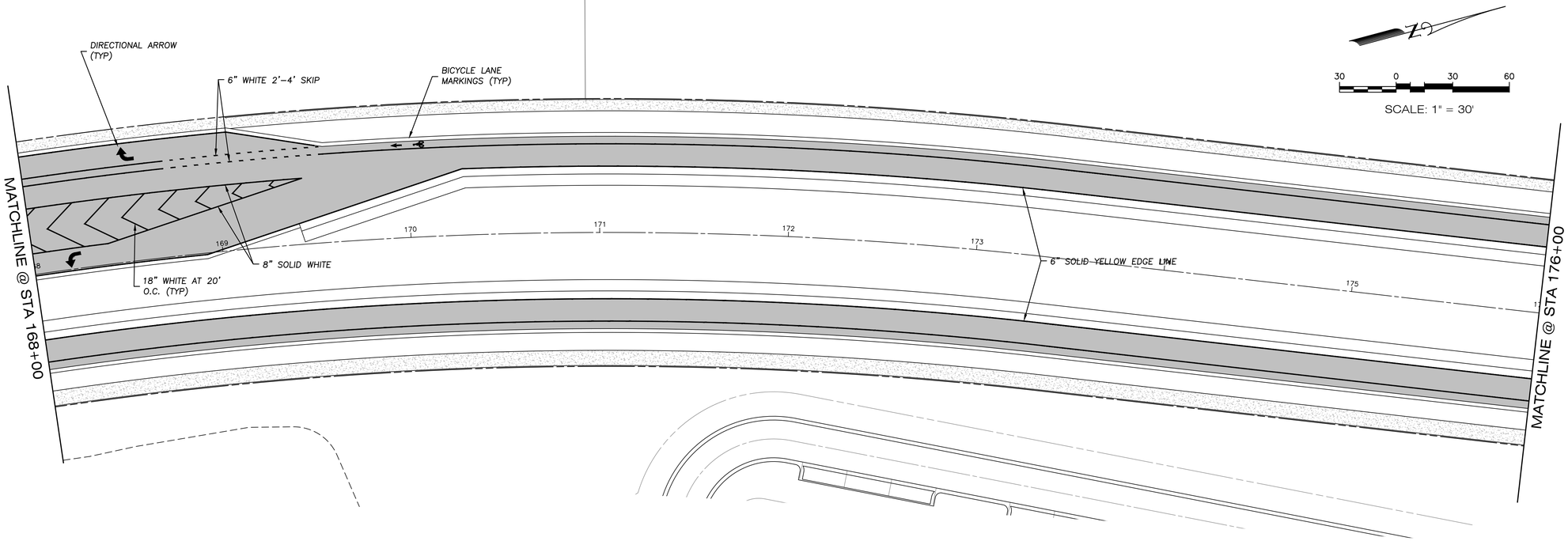

LEGEND

- PROPOSED PAVEMENT
- PROPOSED SIDEWALK
- SIGN & POST (FACE OF SIGN, POST)
- SIGN ON BOTH SIDE OF POST (FACE OF SIGN, POST, FACE OF SIGN)

STANDARD NOTES (PRIVATE ROADWAYS):

1. ALL TRAFFIC CONTROL DEVICES SHALL BE INSTALLED IN CONFORMANCE WITH THE FEDERAL MANUAL ON UNIFORM TRAFFIC CONTROL DEVICES AND FLORIDA DEPARTMENT OF TRANSPORTATION STANDARDS.
2. CONTRACTOR MUST CONTACT ENGINEER OF RECORD PRIOR TO ORDERING STREET NAME SIGNS. APPROVED STREET NAMES CAN NOT BE DETERMINED UNTIL RECORDING OF THE PLAT.
3. EXISTING STRIPING AND OTHER PAVEMENT MARKINGS TO BE REMOVED SHALL BE DONE AS NECESSARY BY HYDROBLASTING. GRINDING IS NOT PERMITTED.
4. SIDEWALK CLEAR ZONE SHALL BE FREE OF OBSTACLES, THIS INCLUDES SHRUBS, TREES, FENCES, ABOVE GROUND UTILITIES I.E. POWER POLES, STREET LIGHTS, GUY ANCHORS, FIRE HYDRANTS, MAIL BOXES, STREET SIGNS AND UTILITY MARKERS ETC.
5. SEE CHART ON DETAIL SHEET 46 FOR SIGN SIZE.

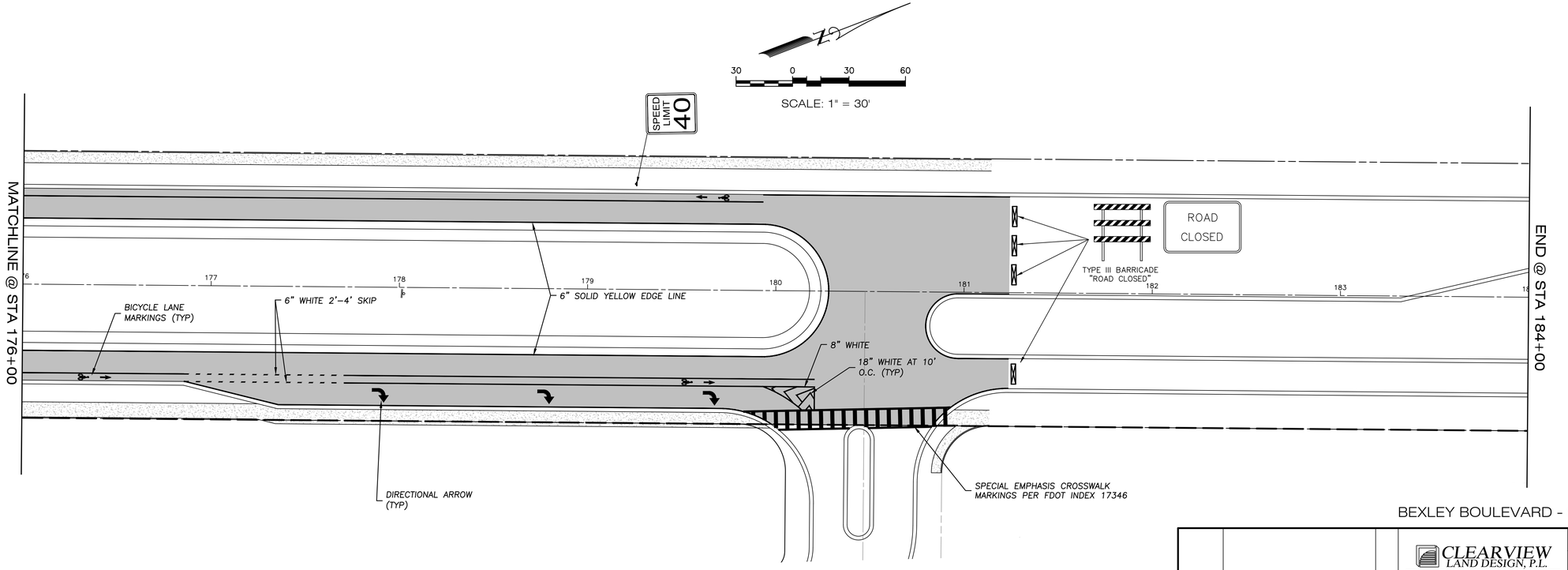

BEXLEY BOULEVARD - STATION 168+00 TO 184+00

DATE	DESCRIPTION	BY
	REVISIONS	

CLEARVIEW LAND DESIGN, P.L.
Engineering Business C.A. No.: 28858
1213 E. 6th Avenue, Tampa, Florida 33605
Office: 813-223-3919 Fax: 813-223-3975

DATE:
JORDAN A. SCHRADER P.E. NO. 74798
FLORIDA PROFESSIONAL ENGINEER

SIGNING & PAVEMENT MARKING PLAN

JOB NO. NLC-BX-015	BEXLEY BOULEVARD 1ST EXTENSION
DESIGN SMIRCH	
DRAWN WILCOX	PREPARED FOR: NNP-BEXLEY, LLC
DATE 06-01-2014	Elevations based on North American Vertical Datum 1988 (NAVD 88) Conversion from NAVD 88 to NGVD 29 = +0.83 Feet
FILE SPM4	SHEET 35 OF 46 SHEETS

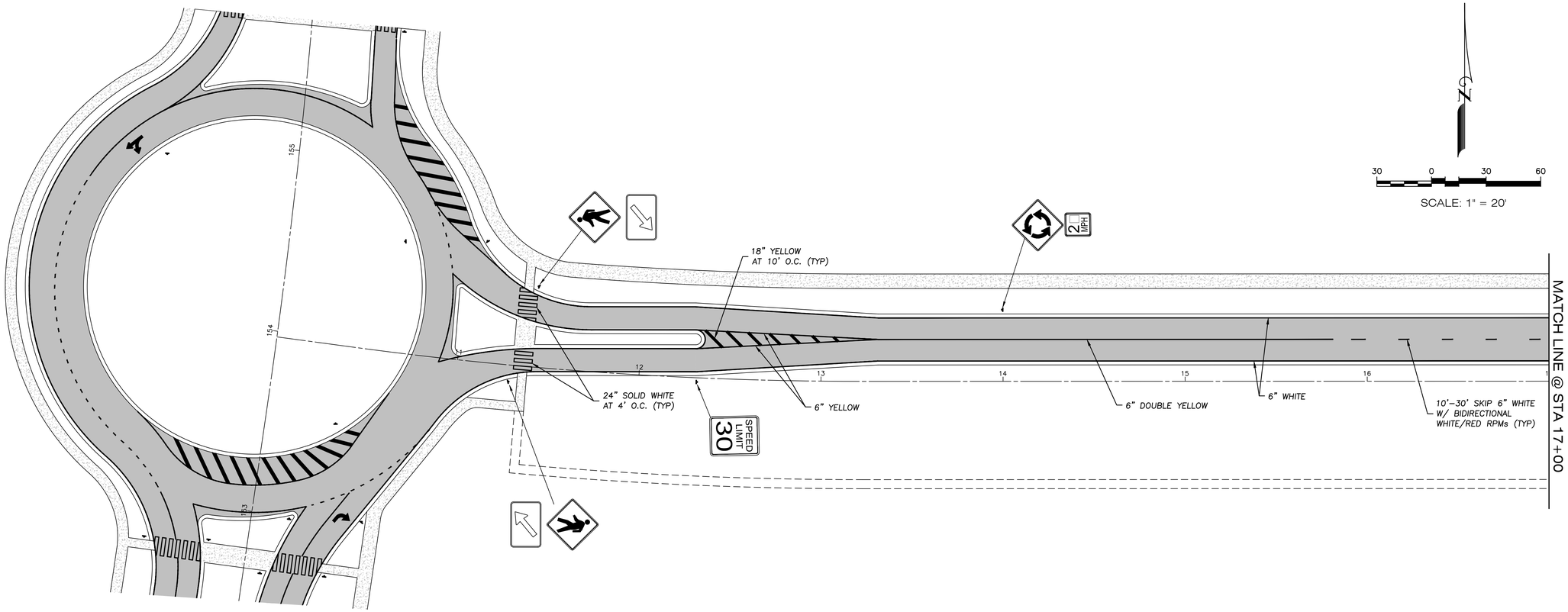

SCALE: 1" = 20'

LEGEND

- PROPOSED PAVEMENT
- PROPOSED SIDEWALK
- SIGN & POST (FACE OF SIGN, POST)
- SIGN ON BOTH SIDE OF POST (FACE OF SIGN, POST, FACE OF SIGN)

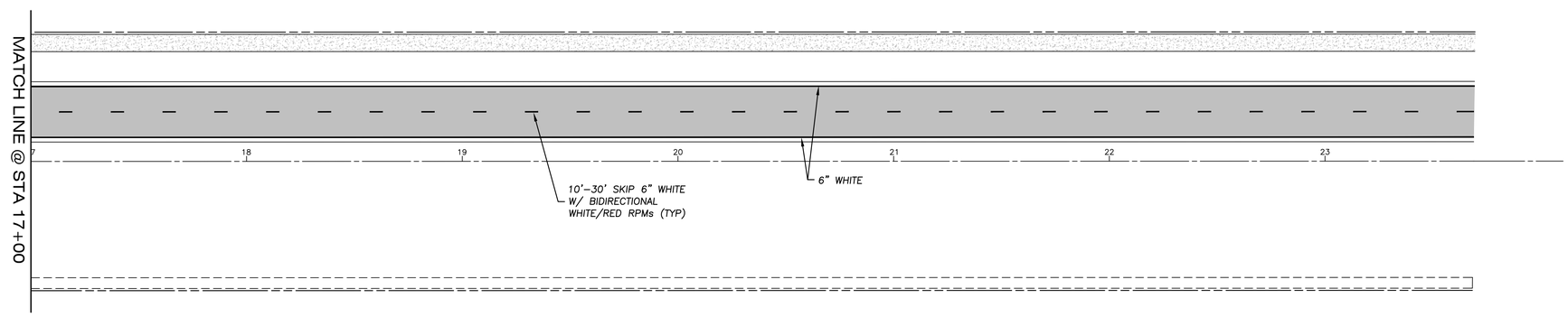

SCALE: 1" = 20'

STANDARD NOTES

1. ALL TRAFFIC CONTROL DEVICES SHALL BE INSTALLED IN CONFORMANCE WITH THE FEDERAL MANUAL ON UNIFORM TRAFFIC CONTROL DEVICES AND FLORIDA DEPARTMENT OF TRANSPORTATION STANDARDS.
2. CONTRACTOR MUST CONTACT ENGINEER OF RECORD PRIOR TO ORDERING STREET NAME SIGNS. APPROVED STREET NAMES CAN NOT BE DETERMINED UNTIL RECORDING OF THE PLAT.
3. EXISTING STRIPING AND OTHER PAVEMENT MARKINGS TO BE REMOVED SHALL BE DONE AS NECESSARY BY HYDROBLASTING. GRINDING IS NOT PERMITTED.
4. SIDEWALK CLEAR ZONE SHALL BE FREE OF OBSTACLES, THIS INCLUDES SHRUBS, TREES, FENCES, ABOVE GROUND UTILITIES I.E. POWER POLES, STREET LIGHTS, GUY ANCHORS, FIRE HYDRANTS, MAIL BOXES, STREET SIGNS AND UTILITY MARKERS ETC.
5. SEE CHART ON DETAIL SHEET 46 FOR SIGN SIZE.

MENTMORE BOULEVARD - STATION 10+00 TO END STA 23+68.95

DATE	DESCRIPTION	BY
REVISIONS		

CLEARVIEW LAND DESIGN, P.L.
Engineering Business C.A. No.: 28858
1213 E. 6th Avenue, Tampa, Florida 33605
Office: 813-223-3919 Fax: 813-223-3975

DATE:
JORDAN A. SCHRADER P.E. NO. 74798
FLORIDA PROFESSIONAL ENGINEER

SIGNING & PAVEMENT MARKING PLAN

JOB NO. NLC-BX-015	BEXLEY BOULEVARD 1ST EXTENSION
DESIGN SMIRCH	
DRAWN WILCOX	PREPARED FOR: NNP-BEXLEY, LLC
DATE 06-01-2014	Elevations based on North American Vertical Datum 1988 (NAVD 88) Conversion from NAVD 88 to NGVD 29 = +0.83 Feet
FILE SPM5	SHEET 36 OF 46 SHEETS

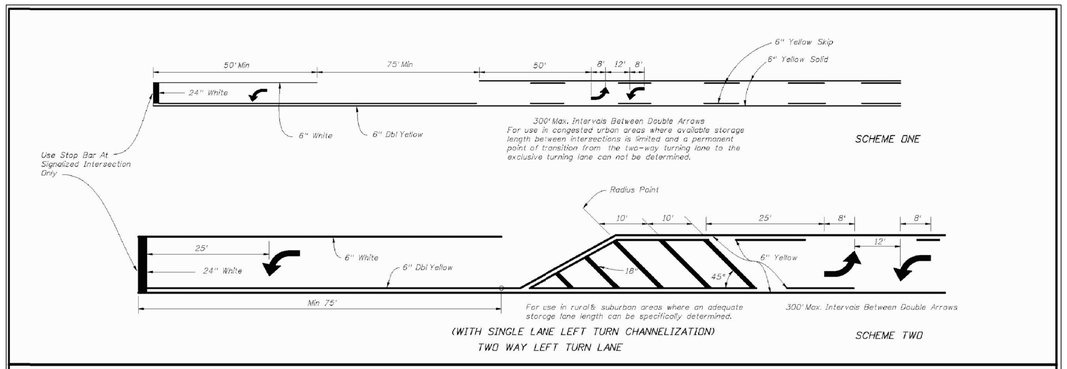

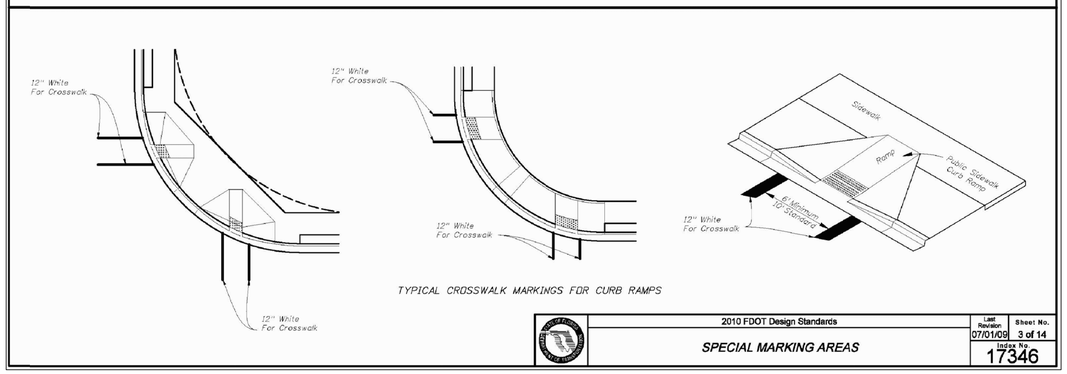

2010 FDOT Design Standards	Last Revision 07/01/09	Sheet No. 3 of 14
SPECIAL MARKING AREAS	Index No. 17346	

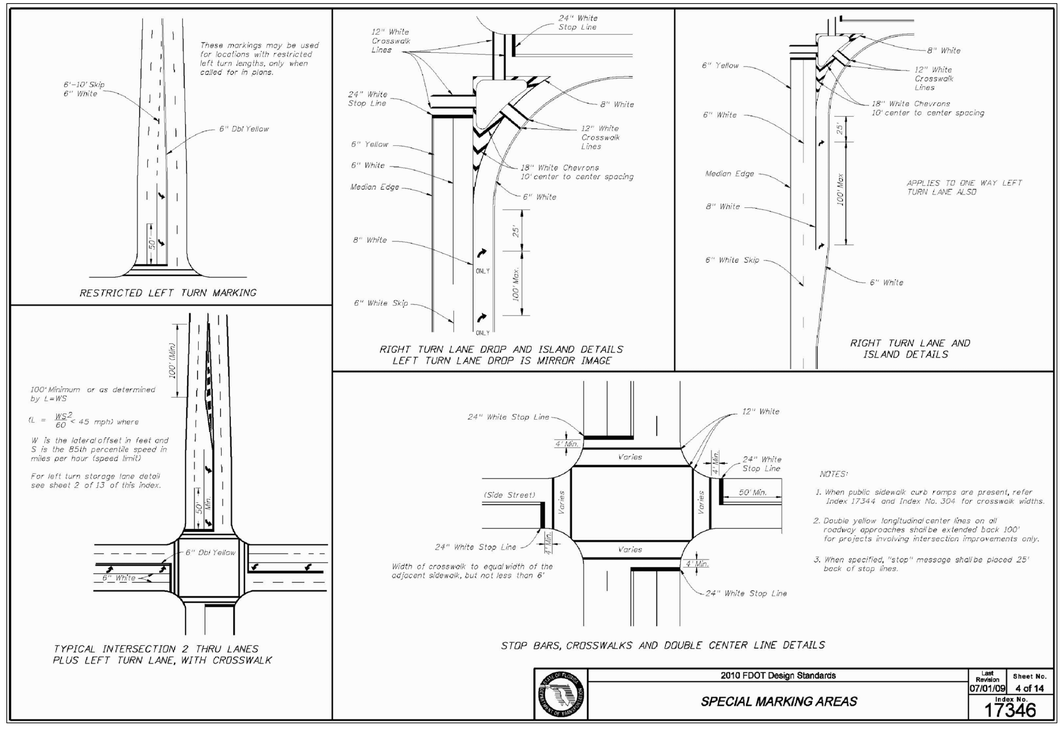

NOTES:

1. When public sidewalk curb ramps are present, refer Index 17344 and Index No. 304 for crosswalk widths.
2. Double yellow longitudinal center lines on all roadway approaches shall be extended back 100' for projects involving intersection improvements only.
3. When specified, "stop" message shall be placed 25' back of stop lines.

2010 FDOT Design Standards	Last Revision 07/01/09	Sheet No. 4 of 14
SPECIAL MARKING AREAS	Index No. 17346	

SIGN LEGEND

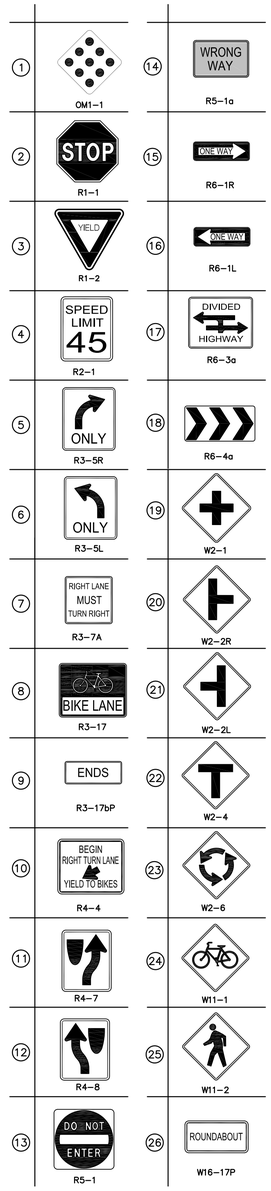

Regulatory Sign and Plaque Sizes		
Sign or Plaque	*Sign Designation*	*SIZE*
Object Marker	OM1-1	18 x 18
Stop	R1-1	36 x 36
Yield	R1-2	48 x 48 x 48
Speed Limit	R2-1	30 x 36
Mandatory Movement Lane Control	R3-5,5a	30 x 36
Left Lane (plaque)	R3-5bP	30 x 12
Right Lane (plaque)	R3-5fP	30 x 12
Optional Movement Lane Control	R3-6	30 x 36
Right (Left) Lane Must Turn Right (Left)	R3-7	36 x 36
BEGIN	R3-9cP	30 x 12
END	R3-9dP	30 x 12
Wrong Way	R5-1a	42 x 30
One Way	R6-1	54 x 18
One Way	R6-2	30 x 36
Divided Highway Crossing	R6-3,3a	30 x 24
Roundabout Directional (3 chevrons)	R6-4a	48 x 24
Roundabout (plaque)	W16-17P	24 x 12
Intersection Warning	W2-1,2,3,4,5,6,7,8	30 x 30
Bicycle	W11-1	30 x 30
Pedestrian	W11-2	36 x 36

DATE	DESCRIPTION	BY
REVISIONS		

CLEARVIEW LAND DESIGN, P.L.
Engineering Business C.A. No.: 28858
1213 E. 6th Avenue, Tampa, Florida 33605
Office: 813-223-3919 Fax: 813-223-3975
DATE:
JORDAN A. SCHRADER P.E. NO. 74798
FLORIDA PROFESSIONAL ENGINEER

SIGNING & PAVEMENT MARKING PLAN

JOB NO. NLC-BX-015	BEXLEY BOULEVARD 1ST EXTENSION
DESIGN SMIRCH	
DRAWN FINNEY	PREPARED FOR: NNP-BEXLEY, LLC
DATE 08/28/2014	Elevations based on North American Vertical Datum 1988 (NAVD 88) Conversion from NAVD 88 to NGVD 29 = +0.83 Feet
FILE SPM-DTL-1	SHEET 37 OF 46 SHEETS

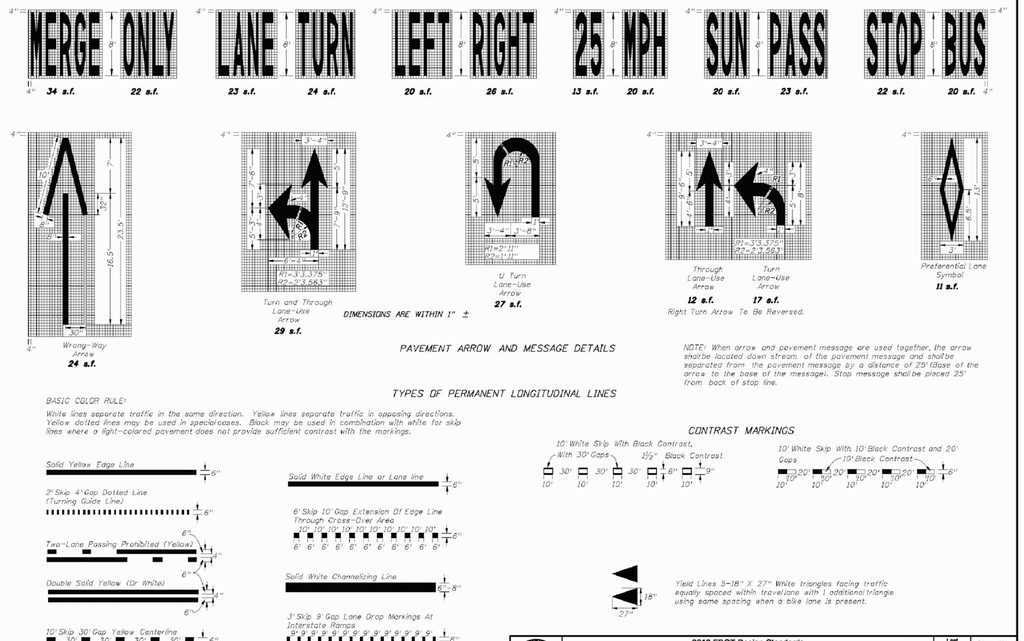

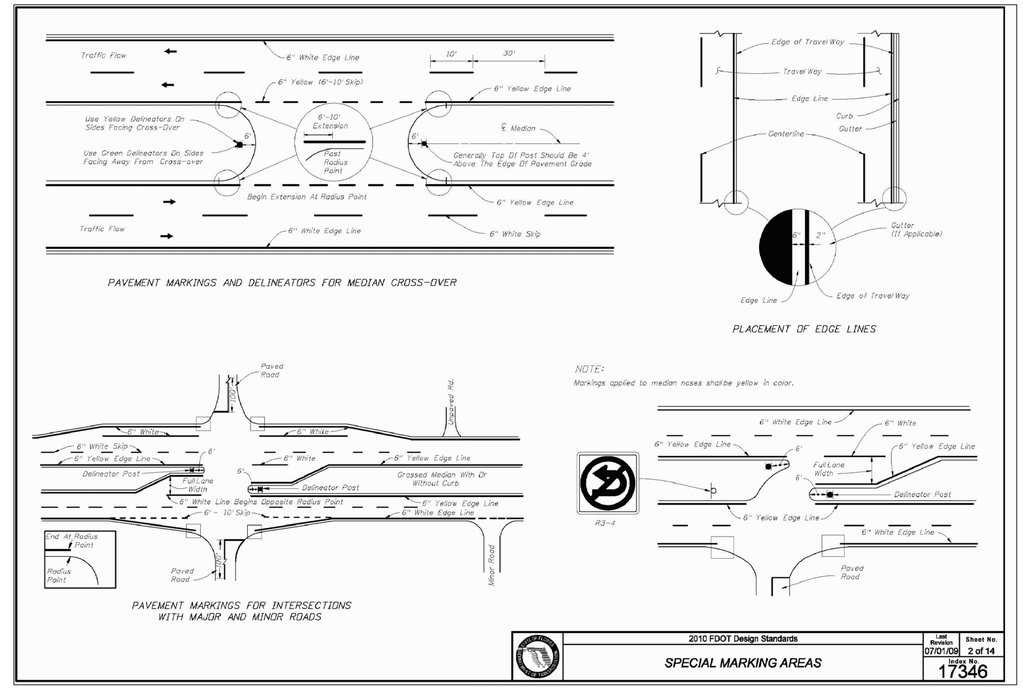

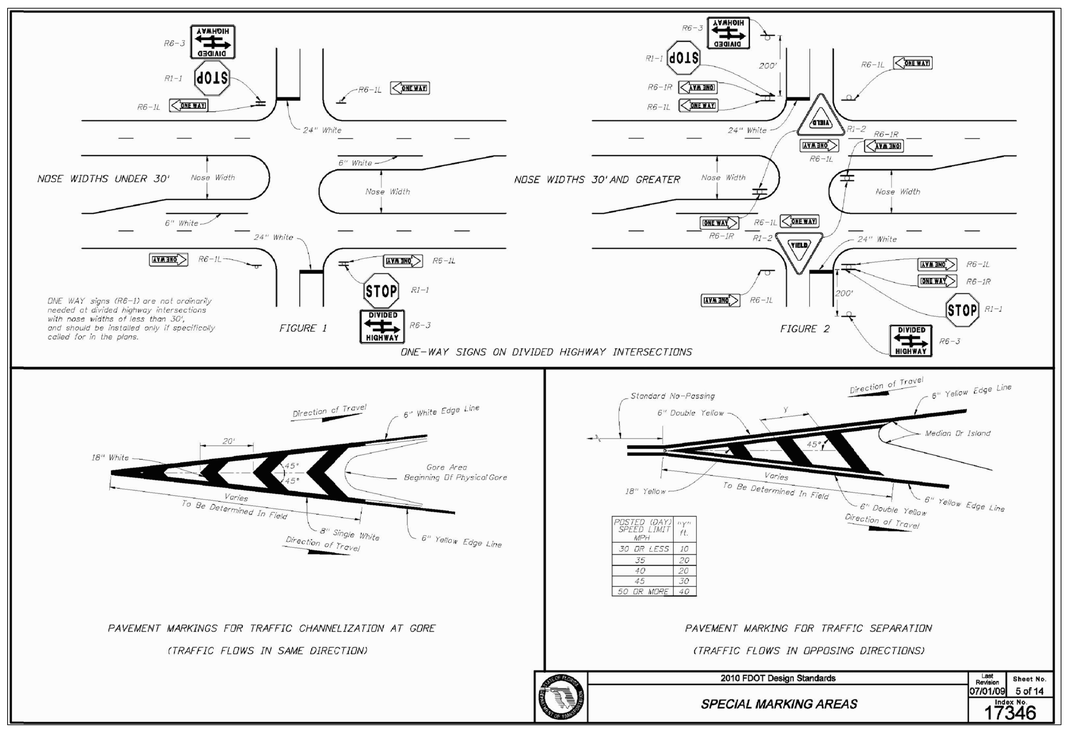

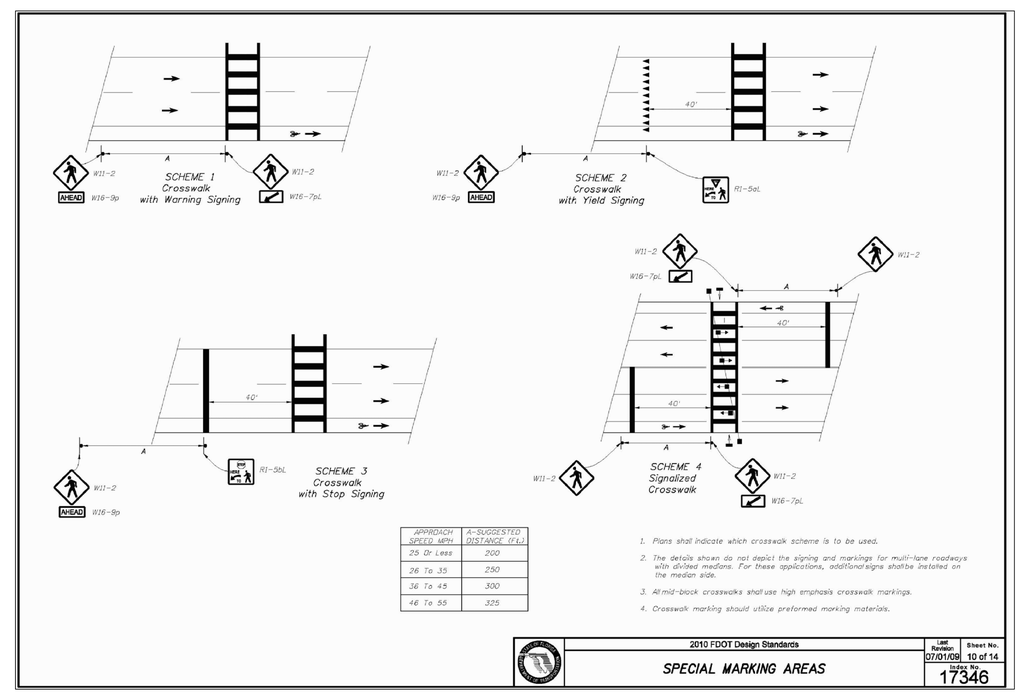

DATE	DESCRIPTION	BY
	REVISIONS	

CLEARVIEW LAND DESIGN, P.L.
Engineering Business C.A. No.: 28858
1213 E. 6th Avenue, Tampa, Florida 33605
Office: 813-223-3919 Fax: 813-223-3975
DATE:
JORDAN A. SCHRADER P.E. NO. 74798
FLORIDA PROFESSIONAL ENGINEER

SIGNING & PAVEMENT MARKING PLAN

JOB NO. NLC-BX-015	BEXLEY BOULEVARD 1ST EXTENSION
DESIGN SMIRCH	
DRAWN FINNEY	PREPARED FOR: NNP-BEXLEY, LLC
DATE 08/28/2014	Elevations based on North American Vertical Datum 1988 (NAVD 88) Conversion from NAVD 88 to NGVD 29 = +0.83 Feet
FILE SPM-DTL-2	SHEET 38 OF 46 SHEETS

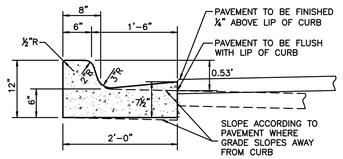

TYPE "F" CURB AND GUTTER

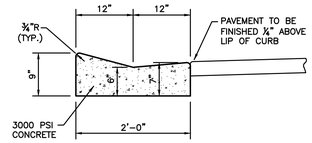

TYPE "A" CURB AND GUTTER

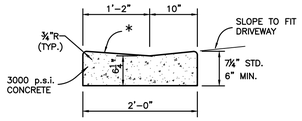

* WHEN USED ON HIGH SIDE OF ROADWAYS, THE CROSS SLOPE OF THE GUTTER SHALL MATCH THE CROSS SLOPE OF THE ADJACENT PAVEMENT. THE THICKNESS OF THE LIP SHALL BE 6", UNLESS OTHERWISE SHOWN.

DROP CURB

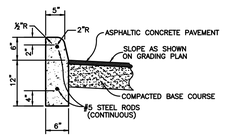

6" UPRIGHT CURB

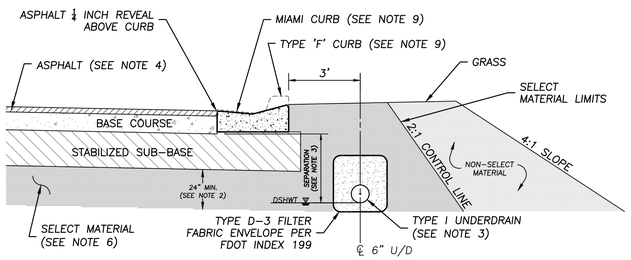

SECTIONAL VIEW
NTS

1. THE MINIMUM VERTICAL SEPARATION BETWEEN THE DESIGN SEASONAL HIGH WATER TABLE (DHSWT) AND THE BOTTOM OF THE BASE AT THE LOWEST EDGE OF PAVEMENT SHALL BE AS FOLLOWS:

A. LIMEROCK BASE	24 INCH
B. SOIL CEMENT BASE	12 INCH
C. CRUSHED CONCRETE BASE (IF APPROVED)	12 INCH
D. ASPHALT BASE COURSE (ABC)	12 INCH

2. A MINIMUM TWO (2) FEET OF SELECT MATERIAL CONSISTING OF A-1, A-3, OR A-2-4 WITH A MAXIMUM 15% PASSING THE #200 SIEVE BELOW THE STABILIZED SUB BASE.
3. TYPE I UNDERDRAIN PER FDOT INDEX 286
   3.1. MINIMUM UNDERDRAIN SLOPE = 0.2% (FDOT INDEX 500)
   3.2. UNDERDRAIN SHALL HAVE A TYPE D-3 FILTER FABRIC ENVELOPE PER FDOT INDEX 199
   3.3. UNDERDRAIN PIPE SIZE = 6"
   3.4. IF THE VERTICAL SEPARATION BETWEEN DSHWT AND BOTTOM OF BASE IS LESS THAN 2 FEET, UNDERDRAINS SHALL BE CONSTRUCTED ALONG BOTH SIDES OF THE ROAD. IF 2-3 FEET, UNDERDRAINS SHALL BE CONSTRUCTED ALONG ONE SIDE.
   3.5. THE INVERT OF A SIX (6) INCH UNDERDRAIN SHALL BE TWO (2) FEET MINIMUM BELOW THE BOTTOM OF THE BASE.
4. TYPE 2 THRU TYPE 5 ROADWAYS SHALL CONTAIN A MINIMUM OF 1.5 INCH OF SP ASPHALTIC CONCRETE. COLLECTOR ROADWAYS SHALL HAVE A MINIMUM OF THREE (3) INCHES OF SP SPHALTIC CONCRETE. TYPE ROADWAYS MAY BE COMPLETED IN STAGES, INITIALLY 2.25 INCHES OF SP 12.5 (S-1) ASPHALT COURSE WITH REQUIRED PAVEMENT MARKINGS AND 0.75 INCHES OF SP 9.5 (S-3) COURSE INSTALLED WITH ANY THERMOPLASTIC STRIPES, PRIOR TO RELEASE OF THE ASSURANCE FOR MAINTENANCE.
5. THE ROAD DESIGN DRAWINGS SHALL CONTAIN SOIL BORING LOCATIONS WITH EXISTING SOIL DATA, OBSERVED WATER LEVEL AND DSHWT SURFACE. UNDERDRAIN OUTFALL POND DATA AND PROXIMATE WETLAND HYDRO PERIOD ELEVATIONS SHALL ALSO BE IDENTIFIED.
6. SELECT MATERIAL SHALL BE PLACED PER FOOT INDEX DRAWINGS 500 & 505.
7. THE REQUIRED MINIMUM STRUCTURAL NUMBER (SN) SHALL BE;
   2.34 MIN. TYPE 2 ROADWAY
   3.50 MIN. TYPE I ROADWAYS
   3.70 MIN. COUNTY COLLECTOR
   4.00 MIN. COUNTY ARTERIAL
8. SOIL CEMENT BASE SHALL NOT BE CONSTRUCTED OVER STABILIZED SUBGRADE EXCEEDING LBR 20. THE COUNTY ASSIGNED LAYER COEFFICIENT FOR A MAXIMUM 12 INCH DEPTH, LBR 20 SHALL BE 0.04 PER INCH.
9. CURB DESIGN IS SITE SPECIFIC AND SHALL BE IDENTIFIED ON PLANS.

NOTE:
NO DEVIATIONS TO THIS DETAIL WILL BE PERMITTED UNLESS APPROVED BY THE COUNTY ENGINEER.
ANY PROPOSED ALTERATIONS SHALL BE CLEARLY IDENTIFIED AND HIGHLIGHTED ON DETAIL.

NOTE:
LOCATION OF CLEANOUT TO BE MARKED ON CURB.

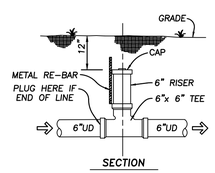

SECTION

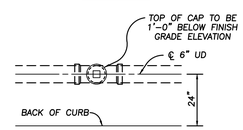

PLAN

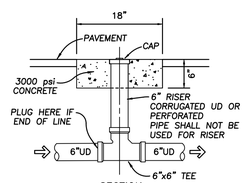

SECTION

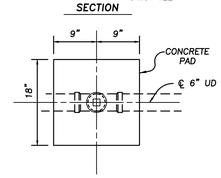

PLAN

CLEANOUT DETAIL
NTS

ROADWAY DESIGN CRITERIA & UNDERDRAIN DETAIL

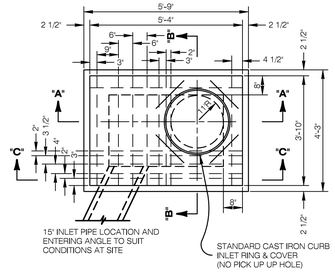

PLAN

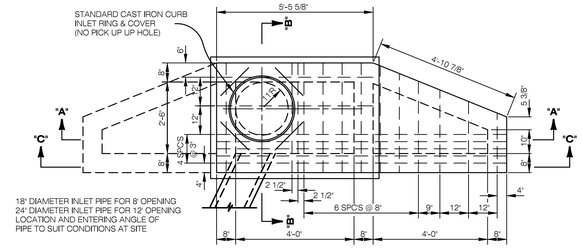

PLAN

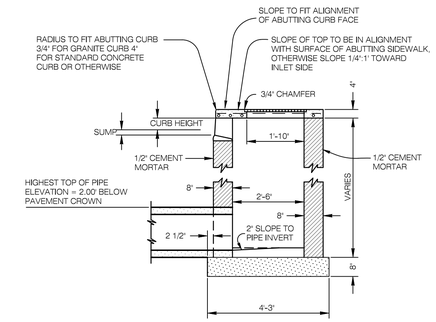

SECTION "B-B"
TYPE "F" CURB ONLY

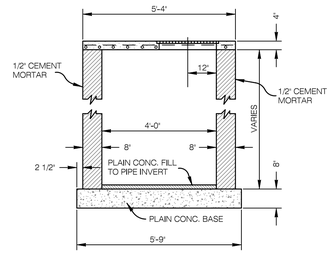

SECTION "A-A"

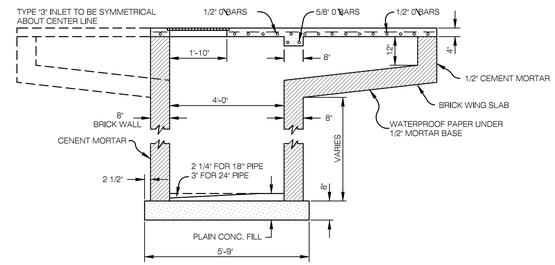

SECTION "A-A"

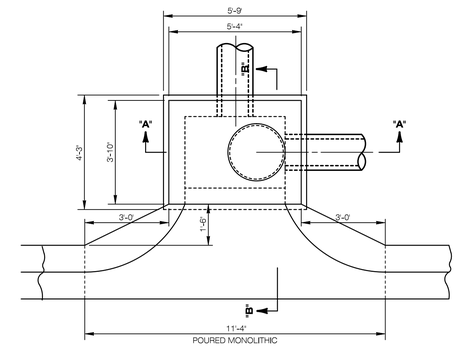

PLAN

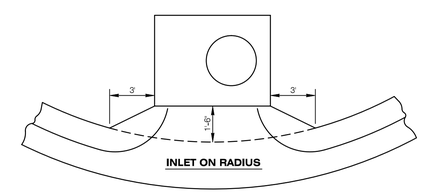

INLET ON RADIUS

STANDARD INLET FOR MIAMI GUTTER

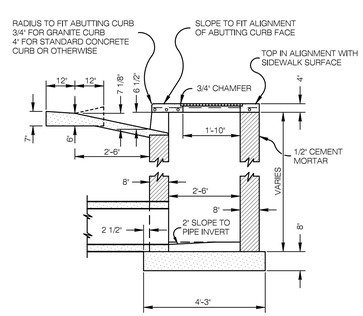

SECTION "B-B"

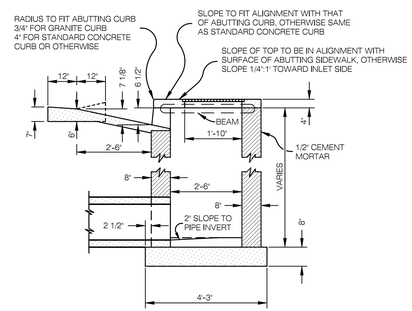

SECTION "B-B"

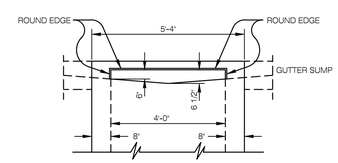

SECTION "C-C"

STANDARD STORM WATER CURB INLET TYPE 1

NOTES:
1) STRUCTURES LARGER THAN 4x6 (INSIDE) SHALL BE PRECAST OR CAST-IN-PLACE.
2) ALL INSIDE BRICK WALLS TO BE PLASTERED WITH 1/2" MIN. OF 1:2 CEMENT MORTAR.

BAR SCHEDULE FOR TOP SLAB			
NO.	SIZE	LOCATION	LENGTH
8	1/2" 0	TRANSVERSE BARS	3'-6"
6	1/2" 0	LONGITUDINAL BARS	5'-1"
1	1/2" 0	LONGITUDINAL BARS	2'-8"
5	5/8" 0	TRAFFIC BEARING ONLY	2'-4"

TYPE '2' - SINGLE WING WITH 8' LENGTH OF THROAT OPENING

TYPE '3' - DOUBLE WING WITH 12' LENGTH OF THROAT OPENING

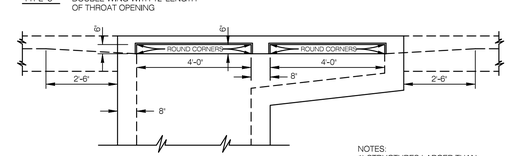

SECTION "C-C"

STANDARD STORM WATER CURB INLET TYPE 2 & 3

NOTES:
1) STRUCTURES LARGER THAN 4x6 (INSIDE) SHALL BE PRECAST OR CAST-IN-PLACE.
2) PAVE WITH BRICK AND MORTAR UP TO SPRING LINE WHEREVER TWO OR MORE PIPES ENTER ONE INLET TO PROVIDE A CHANNEL FOR FLOW OF WATER THROUGH INLET.

BAR SCHEDULE FOR TOP SLAB			
NO.	SIZE	LOCATION	LENGTH
8	1/2" 0	TRANSVERSE BARS - STRAIGHT	3'-6"
1	1/2" 0	TRANSVERSE BARS - STRAIGHT	3'-4"
1	1/2" 0	TRANSVERSE BARS - STRAIGHT	3'-0"
1	1/2" 0	TRANSVERSE BARS - STRAIGHT	2'-9"
1	1/2" 0	TRANSVERSE BARS - STRAIGHT	2'-5"
1	1/2" 0	TRANSVERSE BARS - STRAIGHT	2'-0"
2	5/8" 0	TRANSVERSE BARS - W/ HOOKED ENDS	3'-6"
5	1/2" 0	LONGITUDINAL BARS - STRAIGHT	9'-9"
1	1/2" 0	LONGITUDINAL BARS - STRAIGHT	6'-3"
1	1/2" 0	LONGITUDINAL BARS - STRAIGHT	5'-9"

MUMS NOTE:
THIS CURB INLET HAS BEEN APPROVED BY PASCO COUNTY FOR USE ON NON-FUNCTIONALLY CLASSIFIED ROADWAYS, SUCH AS LOCAL STREETS AND SUBDIVISION COLLECTOR ROADWAYS. IT DOES NOT CONFORM TO THE FLORIDA DEPARTMENT OF TRANSPORTATION MANUAL OF UNIFORM MINIMUM STANDARDS FOR DESIGN, CONSTRUCTION, AND MAINTENANCE FOR STREETS AND HIGHWAYS, THE STANDARD SPECIFICATIONS FOR ROAD AND BRIDGE CONSTRUCTION, OR THE DESIGN STANDARDS FOR DESIGN, CONSTRUCTION, MAINTENANCE AND UTILITY OPERATIONS ON THE STATE HIGHWAY SYSTEM. HOWEVER, WE HEREBY CERTIFY THAT IT IS SUITABLE FOR USE AT THE LOCATIONS DEPICTED HEREIN.

DATE	DESCRIPTION	BY
	REVISIONS	

CLEARVIEW LAND DESIGN, P.L.
Engineering Business C.A. No.: 28858
1213 E. 6th Avenue, Tampa, Florida 33605
Office: 813-223-3919 Fax: 813-223-3975

DATE:
JORDAN A. SCHRADER P.E. NO. 74798
FLORIDA PROFESSIONAL ENGINEER

DRAINAGE DETAILS

JOB NO. NLC-BX-015	BEXLEY BOULEVARD 1ST EXTENSION
DESIGN SMIRCH	
DRAWN FINNEY	PREPARED FOR: NNP-BEXLEY, LLC
DATE 08/28/2014	Elevations based on North American Vertical Datum 1988 (NAVD 88) Conversion from NAVD 88 to NGVD 29 = +0.83 Feet
FILE DD	SHEET 39 OF 46 SHEETS

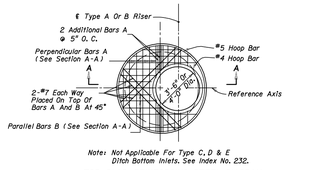

Note: Not Applicable For Type C, D & E Ditch Bottom Inlets. See Index No. 232.

TOP SLAB REINFORCING STEEL DIAGRAM

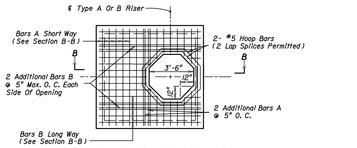

TOP SLAB REINFORCING STEEL DIAGRAM

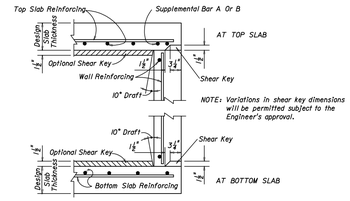

SLAB TO WALL DETAILS FOR PRECAST ALTERNATE WITH 8" WALLS

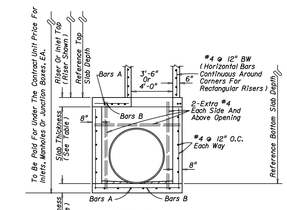

ALTERNATE A
SECTION A-A

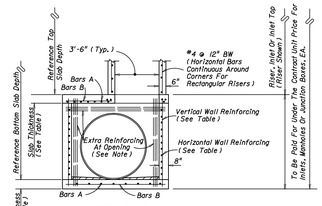

ALTERNATE B
SECTION B-B

*NOTE: When the inside diameter of a round structure is not more than 1'-6" larger than the opening in the riser or top slab, the top of the structure or riser shall be constructed according to the "Special Top Slab" details on this sheet.

NOTE: Provide extra reinforcement each side of each opening at 3" maximum spacing equal to half the area of vertical reinforcement removed by the opening and provide the same area of reinforcement above each opening at 3" maximum spacing as removed by the opening.

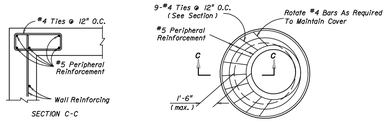

SPECIAL TOP SLAB*

GENERAL NOTES

1. Standard structure bottoms 4'-0" diameter and smaller (Alt. A) and 3'-6" square (Alt. B) are designated Type P. Larger standard structure bottoms are designated Type J. Risers are permitted for all structures.
2. Walls of circular structures (Alternate A) constructed in place may be of non-reinforced concrete or brick or reinforced concrete. Precast and rectangular structures (Alternate B) shall be constructed of reinforced concrete only.
3. Wall thickness and reinforcement are for either reinforced cast-in-place or precast concrete units except that precast circular units may be furnished with walls in accordance with either ASTM C478 (up to 96" diameter) or ASTM C76, Class III, B Wall, modified where the elliptical steel cage area is placed in the center one-third of the wall.
4. Top and floor slab thickness and reinforcement are for precast and cast in place construction. Top and floor slabs shall be of Class II concrete. Concrete as specified in ASTM C478 (4000 psi) may be used in lieu of Class I and Class II concrete in precast items manufactured in plants which are under the "Standard Operating Procedures" for the inspection of precast drainage products.
5. All reinforcement shown is ASTM A615/A615M Grade 60 steel, either smooth or deformed. Equivalent area Grade 40 steel or Grade 65KSI welded wire fabric may be substituted according to Index No. 201.
6. Structure bottoms may be used in conjunction with curb inlet tops Types 1, 2, 3, 4, 5, 6, 9, and 10, and any manhole or junction box unless otherwise shown in the plans or other standard drawings. Alt. B structure bottoms may be used in conjunction with curb inlet Types 7 & 8, or any ditch bottom inlet unless otherwise shown in the plans or other standard drawings.
7. Rectangular structures may be rotated as directed by the Engineer in order to facilitate connections between the structure walls and storm sewer pipes.
8. Except when ACI hooks are specifically required, reinforcement top and slab shall be straight embedment.
9. All steel bars shall have $1\frac{1}{2}$" minimum cover unless otherwise shown except for precast circular units manufactured under ASTM C76 or ASTM C478. Horizontal steel in rectangular structures shall be lapped a minimum of 24 bar diameters at corners.
10. The corner fillets shown are necessary for rectangular structures used with circular risers and inlet throats and used on skew with rectangular risers, inlet and inlet throats. Fillets will be required in lieu of the bottom slab of the Alt. B riser when used with the Alt. A box. Each fillet shall be reinforced with 2-#5 bars.
11. Inlet throats, riser or manhole tops shall be secured to structures as shown on Index No. 201.
12. Structures with depths over 14' are to be checked for flotation by designer of project drainage.
13. Units larger than specified standard may be substituted at the contractor's option when these units will not cause or increase the severity of utility conflicts. Such larger units shall be furnished at no additional cost to the Department. Larger Alternate A units cannot replace Alternate B units without approval of the Engineer. This note applies to this index only.
14. For manhole and junction box tops, for frames and covers, and, for supplementary details see Index No. 201.

STRUCTURE BOTTOMS
TYPE J AND P

1 of 2

SLAB DESIGNS - SQUARE AND RECTANGULAR STRUCTURES

(ALL SLABS 8" THICK - REINFORCING PARALLEL TO SHORT WAY AND LONG WAY)

SHORT-WAY SLAB DEPTH	SHORT-WAY SCHEDULE	LONG-WAY SLAB DEPTH	LONG-WAY SCHEDULE
SIZE: 3'-6" x UNLIMITED			
≥ 0.5' < 29'	B	≥ 0.5' < 40'	B
29' < 40'	C		
SIZE: 4'-0" x UNLIMITED			
≥ 0.5' < 19'	B	≥ 0.5' < 34'	B
19' < 29'	C	34' < 40'	C
29' < 40'	D		
SIZE: 5' x 5'			
≥ 0.5' < 3'	C	≥ 0.5' < 3'	C
3' < 19'	B	3' < 19'	B
19' < 28'	C	19' < 28'	C
28' < 38'	D	28' < 38'	D
38' < 40'	F	38' < 40'	F
SIZE: 5' x 6'			
≥ 0.5' < 3'	C	≥ 0.5' < 3'	C
3' < 16'	B	3' < 20'	B
16' < 24'	C	20' < 29'	C
24' < 34'	D	29' < 40'	D
34' < 40'	F		
SIZE: 5' x 7'			
≥ 0.5' < 3'	C	≥ 0.5' < 3'	C
3' < 14'	B	3' < 22'	B
14' < 21'	C	22' < 33'	C
21' < 39'	D	33' < 40'	D
39' < 40'	F		
SIZE: 5' x 8'			
≥ 0.5' < 3'	C	≥ 0.5' < 39'	B
3' < 8'	B	39' < 40'	C
8' < 17'	C		
17' < 23'	D		
23' < 40'	F		
SIZE: 5' x 9'			
≥ 0.5' < 3'	C	≥ 0.5' < 32'	B
3' < 8'	B	32' < 40'	C
8' < 17'	C		
17' < 23'	D		
23' < 40'	F		

SHORT-WAY SLAB DEPTH	SHORT-WAY SCHEDULE	LONG-WAY SLAB DEPTH	LONG-WAY SCHEDULE
SIZE: 6' x 6'			
≥ 0.5' < 3'	D	≥ 0.5' < 3'	D
3' < 4'	C	3' < 4'	C
4' < 14'	B	4' < 14'	B
14' < 21'	C	14' < 21'	C
21' < 28'	D	21' < 28'	D
28' < 40'	F	28' < 40'	F
SIZE: 6' x 7'			
≥ 0.5' < 3'	D	≥ 0.5' < 3'	D
3' < 4'	C	3' < 4'	C
4' < 12'	B	4' < 15'	B
12' < 19'	C	15' < 21'	C
19' < 26'	D	21' < 30'	D
26' < 40'	F	30' < 40'	F
SIZE: 6' x 8'			
≥ 0.5' < 3'	D	≥ 0.5' < 3'	D
3' < 4'	C	3' < 4'	C
4' < 7'	B	4' < 16'	B
7' < 16'	C	16' < 23'	C
16' < 23'	D	23' < 32'	D
23' < 40'	F	32' < 40'	F
SIZE: 6' x 9'			
≥ 0.5' < 3'	D	≥ 0.5' < 3'	D
3' < 15'	C	3' < 4'	C
15' < 21'	D	4' < 18'	B
21' < 27'	E	18' < 27'	C
27' < 40'	G	27' < 37'	D
		37' < 40'	E
SIZE: 7' x 7'			
≥ 0.5' < 3'	E	≥ 0.5' < 3'	E
3' < 4'	D	3' < 4'	D
4' < 16'	C	4' < 16'	C
16' < 22'	D	16' < 22'	D
22' < 28'	E	22' < 28'	E
28' < 40'	G	28' < 40'	G
SIZE: 7' x 8'			
≥ 0.5' < 3'	E	≥ 0.5' < 3'	E
3' < 4'	D	3' < 4'	D
4' < 15'	C	4' < 17'	C
15' < 21'	D	17' < 23'	D
21' < 27'	E	23' < 29'	E
27' < 40'	G	29' < 40'	G
SIZE: 7' x 9'			
≥ 0.5' < 3'	E	≥ 0.5' < 3'	E
3' < 4'	D	3' < 4'	D
4' < 12'	C	4' < 18'	C
12' < 18'	D	18' < 24'	D
18' < 24'	E	24' < 32'	E
24' < 40'	G	32' < 40'	G

SHORT-WAY SLAB DEPTH	SHORT-WAY SCHEDULE	LONG-WAY SLAB DEPTH	LONG-WAY SCHEDULE
SIZE: 8' x 8'			
≥ 0.5' < 3'	D	≥ 0.5' < 3'	D
3' < 4'	C	3' < 4'	C
4' < 9'	B	4' < 9'	B
9' < 17'	C	9' < 17'	C
17' < 31'	D	17' < 31'	D
31' < 40'	G	31' < 40'	G
SIZE: 8' x 9'			
≥ 0.5' < 3'	D	≥ 0.5' < 3'	E
3' < 4'	C	3' < 4'	D
4' < 16'	B	4' < 18'	C
16' < 22'	C	18' < 25'	D
22' < 29'	D	25' < 33'	F
29' < 40'	F	33' < 40'	G
SIZE: 9' x 9'			
≥ 0.5' < 3'	F	≥ 0.5' < 3'	F
3' < 14'	C	3' < 14'	C
14' < 20'	D	14' < 20'	D
20' < 26'	E	20' < 26'	E
26' < 40'	G	26' < 40'	G

WALL DESIGNS - RECTANGULAR STRUCTURES

VERTICAL REINFORCING WALL DEPTH	VERTICAL REINFORCING SCHEDULE	HORIZONTAL REINFORCING WALL DEPTH	HORIZONTAL REINFORCING SCHEDULE
SIZE: 3'-6" * SEE NOTE BELOW			
≥ 1.17' < 40'	A	≥ 1.17' < 40'	B
SIZE: 4'-0"			
≥ 1.17' < 40'	A	≥ 1.17' < 40'	B
SIZE: 5'-0"			
≥ 1.17' < 40'	A	≥ 1.17' < 33'	B
		33' < 40'	C
SIZE: 6'-0"			
≥ 1.17' < 40'	A	≥ 1.17' < 22'	B
		22' < 40'	C
SIZE: 7'-0"			
≥ 1.17' < 40'	A	≥ 1.17' < 15'	B
		15' < 25'	C
		25' < 40'	D
SIZE: 8'-0"			
≥ 1.17' < 40'	A	≥ 1.17' < 11'	B
		11' < 19'	C
		19' < 29'	D
		29' < 40'	F
SIZE: 9'-0"			
≥ 1.17' < 40'	A	≥ 1.17' < 15'	C
		15' < 22'	D
		22' < 40'	F

* Precast structures 3'-6" x 3'-6" maybe cast with 6" walls to depths of 15'. See Index No. 201.

SLAB DESIGNS - ROUND STRUCTURES

SLAB DEPTH	SLAB THICKNESS	REINFORCING (2 WAYS) SCHEDULE
SIZE: 3'-6"		
≥ 0.5' < 40'	8"	C
SIZE: 4'-0"		
≥ 0.5' < 40'	8"	C
SIZE: 5'-0"		
≥ 0.5' < 30'	8"	C
30' < 40'	8"	D
SIZE: 6'-0"		
≥ 0.5' < 8'	8"	B
8' < 18'	8"	C
18' < 30'	8"	D
30' < 37'	8"	E
37' < 40'	8"	G
SIZE: 8'-0"		
≥ 0.5' < 9'	10"	C
9' < 15'	10"	D
15' < 23'	10"	E
23' < 33'	12"	E
33' < 40'	12"	G
SIZE: 10'-0"		
≥ 0.5' < 6'	10"	C
6' < 11'	10"	D
11' < 17'	10"	E
17' < 23'	12"	E
23' < 40'	12"	G
SIZE: 12'-0"		
≥ 0.5' < 6'	12"	C
6' < 11'	12"	D
11' < 16'	12"	E
16' < 20'	14"	E
20' < 40'	14"	G

REINFORCING SCHEDULE

SCHEDULE	GRADE 60 STEEL OR 65 KSI (WIRE FABRIC) IN²/FT
A	0.20
B	0.24
C	0.37
D	0.53
E	0.73
F	1.06
G	1.45

GENERAL NOTES

1. Size is the inside dimension(s) of a structure.
2. Slab reinforcement is appropriate for top, intermediate, and bottom slabs.
3. Slab depth is measured from finished grade to top of slab.
4. Wall design depth is measured to the top of the bottom slab for boxes and to the top of the intermediate slab for risers.
5. Wall height is the distance between top of lower slab to bottom of upper slab.
6. Wall sizes exceeding 9'-0" require a special design.

STRUCTURE BOTTOMS
TYPE J AND P

2 of 2

DIMENSIONS AND QUANTITIES

	D	X	A	B	C	E	F	G	M Single Pipe	M Double Pipe	M Triple Pipe	M Quad. Pipe	N	5½" CONCRETE SLAB (CY) ◪ Single Pipe	Double Pipe	Triple Pipe	Quad. Pipe	SODDING (SQ. YDS.) Single Pipe	Double Pipe	Triple Pipe	Quad. Pipe
2d Slope	15"	2'-7"	1.92'	2.18'	4.10'	2.06'	5'	1.22'	4.63'	7.61'	9.79'	12.31'	1.19'	0.38	0.58	0.77	0.96	21	24	27	30
	18"	2'-10"	1.97'	2.14'	4.11'	2.56'	6'	1.41'	4.92'	7.75'	10.58'	13.42'	1.21'	0.44	0.65	0.87	1.09	22	25	28	31
	24"	3'-5"	2.06'	3.85'	5.91'	3.56'	7'	1.73'	5.52'	8.92'	12.33'	15.75'	1.25'	0.54	0.83	1.12	1.42	24	28	32	35
	30"	4'-3"	2.21'	4.95'	7.10'	4.56'	8'	2.00'	6.08'	10.33'	14.58'	18.83'	1.29'	0.66	1.09	1.50	1.91	26	31	35	40
	36"	5'-1"	2.36'	6.08'	8.31'	5.56'	9'	2.24'	6.67'	11.75'	16.83'	21.92'	1.33'	0.81	1.38	1.96	2.54	28	34	39	45
	42"	6'-0"	2.54'	7.21'	9.55'	6.56'	10'	2.45'	7.25'	13.25'	19.25'	25.25'	1.38'	0.97	1.70	2.45	3.19	30	37	43	50
	48"	6'-9"	2.63'	8.33'	10.76'	7.56'	11'	2.65'	7.83'	14.58'	21.33'	28.08'	1.42'	1.13	2.04	2.93	3.84	32	39	47	54
	54"	7'-8"	2.75'	9.44'	11.96'	8.56'	12'	2.83'	8.42'	15.08'	23.75'	31.42'	1.46'	1.31	2.44	3.58	4.72	34	42	51	59
	60"	8'-6"	2.82'	10.56'	13.18'	9.56'	14'	3.00'	9.00'	17.50'	26.00'	34.50'	1.50'	1.51	2.89	4.28	5.68	36	45	55	64
	66"	9'-5"	2.71'	11.68'	(4.39')	10.56'	15'	3.18'	9.58'	(18.75')	(27.92')	37.08'	1.54'	1.68	3.25	4.84	6.43	38	48	58	68
	72"	10'-0"	2.80'	12.80'	(5.60')	11.56'	16'	3.30'	10.16'	20.16'	30.16'	40.16'	1.58'	1.89	3.74	5.59	7.45	40	51	62	73
4d Slope	15"	2'-7"	2.27'	4.09'	6.30'	4.03'	8'	1.22'	4.63'	7.61'	9.79'	12.31'	1.19'	0.57	0.87	1.15	1.44	23	26	29	32
	18"	2'-10"	2.36'	5.12'	7.46'	5.03'	9'	1.41'	4.92'	7.75'	10.58'	13.42'	1.21'	0.66	0.99	1.31	1.65	25	28	31	35
	24"	3'-5"	2.53'	7.18' ◇	9.71'	7.03' ◇	11'	1.73'	5.52'	8.92'	12.33'	15.75'	1.25'	0.85	1.30	1.74	2.20	28	32	36	40
	30"	4'-3"	2.70'	9.25'	11.85'	9.03'	13'	2.00'	6.08'	10.33'	14.58'	18.83'	1.29'	1.03	1.74	2.39	3.05	31	36	41	46
	36"	5'-1"	2.87'	11.31' ◇	14.08'	11.03' ◇	15'	2.24'	6.67'	11.75'	16.83'	21.92'	1.33'	1.32	2.21	3.08	3.96	34	40	46	52
	42"	6'-0"	3.06'	13.17'	16.42'	13.03'	17'	2.45'	7.25'	13.25'	19.25'	25.25'	1.38'	1.68	2.76	3.91	5.09	38	44	51	58
	48"	6'-9"	3.22'	15.43'	(8.65')	15.03'	19'	2.65'	7.83'	14.58'	21.33'	28.08'	1.42'	1.85	3.33	4.73	6.17	41	48	56	63
	54"	7'-8"	3.39'	17.49'	(10.88')	17.03'	21'	2.83'	8.42'	16.08'	23.75'	31.42'	1.46'	2.14	3.95	5.77	7.58	44	52	61	69
	60"	8'-6"	3.56'	19.55'	(13.3')	19.03'	23'	3.00'	9.00'	17.50'	26.00'	34.50'	1.50'	2.45	4.66	6.87	9.07	47	56	66	75
	66"	9'-5"	3.73'	21.62'	(15.9')	21.03'	25'	3.18'	9.58'	(18.75')	(27.92')	37.08'	1.54'	2.88	5.54	8.18	10.84	49	59	69	80
	72"	10'-0"	3.92'	22.68'	(18.59')	23.03'	27'	3.30'	10.16'	20.16'	30.16'	40.16'	1.58'	3.54	6.61	9.87	13.13	52	63	74	85

◪ See General Note No. 3.
See Sheet 5 Of 6 For 3" Slab Quantities

B E
△ 6.42" △ 6.25 Dimensions permitted to allow use of 8' standard pipe lengths.
◇ 10.40 ◇10.10' Dimensions permitted to allow use of 12' standard pipe lengths.
△◇ Concrete slab shall be deepened to form bridge across crown of pipe. See section below.

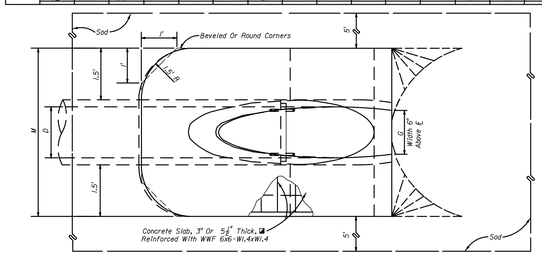

TOP VIEW-SINGLE PIPE

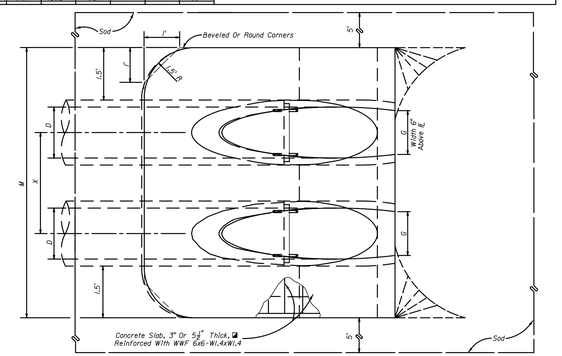

TOP VIEW-MULTIPLE PIPE

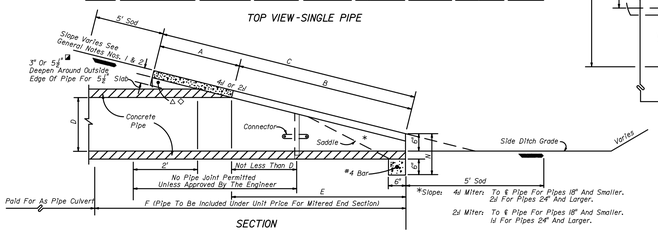

SECTION

NOTE: See sheet 6 for details and notes.

CROSS DRAIN
MITERED END SECTION
SINGLE AND MULTIPLE ROUND CONCRETE PIPE
FDOT INDEX #272

GENERAL NOTES

1. Mitered end sections for pipe sizes 15", 18" and 24" round or equivalent pipe arch or elliptical pipe are permitted within the clear zone. When the slope intersection permits, the mitered end section may be located with the culvert opening as close as 8' beyond the outside edge of the shoulder.
2. Slope and ditch transitions shall be used when the normal roadway slope must be flattened to place end section outside clear zone. See detail left.
3. The reinforced concrete slab shall be constructed for all sizes of cross drain pipe and cast in place with Class I concrete. Slabs shall be $5\frac{1}{2}$" thick unless 3" thickness called for in plans.
4. Concrete pipe used in the assembly of mitered end sections shall be selective lengths to avoid excessive connections.
5. Corrugated metal pipe galvanizing that is damaged during beveling and perforating for mitered end section shall be repaired.
6. That portion of corrugated metal pipe in direct contact with the concrete slab shall be bituminous coated prior to placing of the concrete.
7. Unless otherwise designated in the plans, concrete pipe mitered end sections may be used with any type of cross drain pipe; corrugated steel pipe mitered end sections may be used with any type of cross drain pipe except aluminum pipe; and, corrugated aluminum mitered end sections may be used with any type of cross drain pipe except steel pipe. When bituminous coated metal pipe is specified for cross drain pipe, mitered end sections shall be constructed with like pipe or concrete pipe.
8. When the mitered end section pipe is dissimilar to the cross drain pipe, a concrete jacket shall be constructed in accordance with Standard Index 280.
9. When existing multiple cross drain pipes are spaced other than the dimensions shown in this detail, or have non-parallel axes, or have non-uniform sections, the mitered end sections will be constructed either separately as single pipe mitered end sections or collectively as multiple pipe end sections as directed by the Engineer; however, mitered end sections will be paid for each based on each independent pipe end.
10. The cost of all pipe(s), fasteners, reinforcing, connectors, anchors, concrete, sealants, jackets, and coupling bands shall be included in the cost for the mitered end section. Sodding shall be paid for separately under the contract unit price of Sodding, SY.
11. Mitered end sections shall be paid for under the contract unit price for Mitered End Section (CD), Each, based on each independent pipe end. Mitered end sections use for detention/retention basin outlets are to be paid for under the contract unit price for Mitered End Section, (BD), Each.

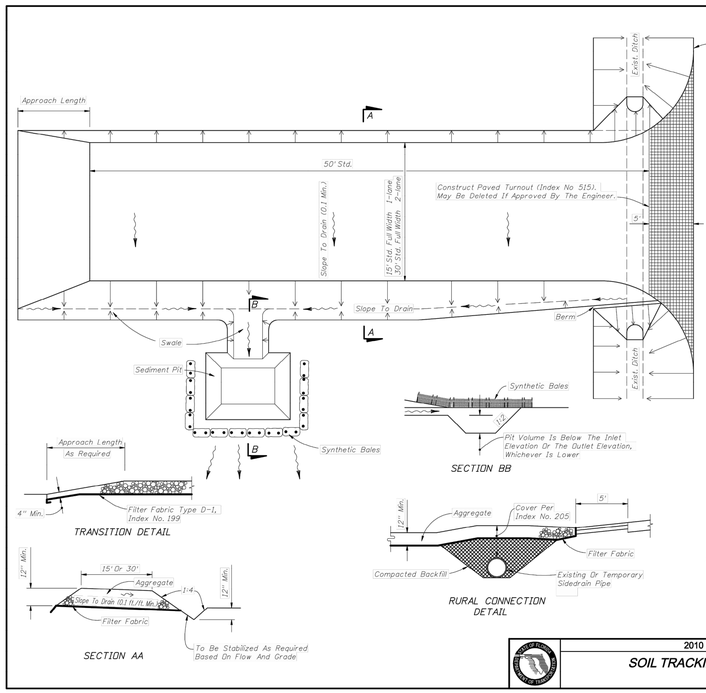

GENERAL NOTES

1. A Soil Tracking Prevention Device (STPD) shall be constructed at locations designated by the engineer for points of egress from unstabilized areas of the project to public roads where off-site tracking of mud could occur. Traffic from unstabilized areas of the construction project shall be directed thru a STPD. Barriers, flagging, or other positive means shall be used as required to limit and direct vehicular egress across the STPD.
2. The Contractor may propose an alternative technique to minimize off-site tracking of sediment. The alternative must be reviewed and approved by the Engineer prior to its use.
3. All materials spilled, dropped, or tracked onto public roads (including the STPD aggregate and construction mud) shall be removed daily, or more frequently if so directed by the Engineer.
4. Aggregates shall be as described in Section 901 excluding 901-2.3. Aggregates shall be FDOT size #1. If this size is not available, the next available smaller size aggregate may be substituted with the approval of the Engineer. Sizes containing excessive small aggregate will track off the project and are unsuitable.
5. The sediment pit should provide a retention volume of 3600 cubic feet/acre of surface area draining to the pit. When the STPD is isolated from other drainage areas, the following pit volumes will satisfy this requirement:
   15' x 50'=100 ft.³ 30' x 50'=200 ft.³
   As an option to the sediment pit, the width of the swale bottom can be increased to obtain the volume. When the sediment pit or swale volume has been reduced to one half, it shall be cleaned. When a swale is used, synthetic bales or silt fence shall be placed along the entire length.
6. The swale ditch draining the STPD shall have a 0.02% minimum and a 1.0% maximum grade along the STPD and to the sediment pit.
7. Mitered end sections are not required when the sidedrain pipe satisfies the clear zone requirements.
8. The STPD shall be maintained in a condition that will allow it to perform its function. To prevent off-site tracking, the STPD shall be rinsed (daily when in use) to move accumulated mud downward thru the stone. Additional stabilization of the vehicular route leading to the STPD may be required to limit the mud tracked.
9. A STPD shall be paid for under the contract unit price for Soil Tracking Prevention Device, EA. The unit price shall constitute full compensation for construction, maintenance, replacement of materials, removal, and restoration of the area utilized for the STPD; including but not limited to excavation, grading, temporary pipe (including MES when required), filter fabric, aggregate, paved turnout (including asphalt and base construction), ditch stabilization, approach route stabilization, sediment removal and disposal, water, rinsing and cleaning of the STPD and cleaning of public roads, grassing and sod. Synthetic Bale or Bale Type Barrier shall be paid for under the contract unit price for Synthetic Bales, LF. Silt fence shall be paid for under the contract unit price for Staked Silt Fence, LF.
10. The nominal size of a standard STPD is 15' x 50' unless otherwise shown in the plans. If the volume of entering and existing vehicles warrant, a 30' width STPD may be used if approved by the Engineer. When a double width (30') STPD is used, the pay quantity shall be 2 for each location.

2010 FDOT Design Standards

SOIL TRACKING PREVENTION DEVICE
TYPE A

Last Revision	Sheet No.
07/01/07	1 of 1

Index No. 106

DATE	DESCRIPTION	BY
REVISIONS		

CLEARVIEW LAND DESIGN, P.L.
Engineering Business C.A. No.: 28858
1213 E. 6th Avenue, Tampa, Florida 33605
Office: 813-223-3919 Fax: 813-223-3975

DATE:
JORDAN A. SCHRADER P.E. NO. 74798
FLORIDA PROFESSIONAL ENGINEER

DRAINAGE DETAILS

JOB NO. NLC-BX-015	BEXLEY BOULEVARD 1ST EXTENSION
DESIGN SMIRCH	
DRAWN FINNEY	PREPARED FOR: NNP-BEXLEY, LLC
DATE 08/28/2014	Elevations based on North American Vertical Datum 1988 (NAVD 88) Conversion from NAVD 88 to NGVD 29 = +0.83 Feet
FILE DD	SHEET 40 OF 46 SHEETS

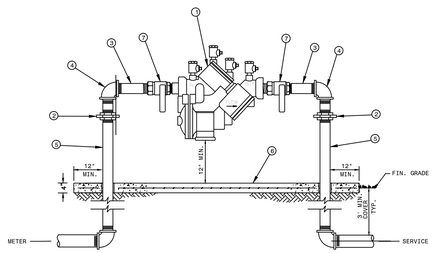

MATERIALS		
ITEM	QUANT.	DESCRIPTION
1	1	BACKFLOW PREVENTER ASSEMBLY, REDUCED PRESSURE ZONE
2	2	UNIONS - GALV.
3	2	NIPPLES - BRASS
4	2	ELBOWS - GALV. 90°
5	2	RISER - GALV.
6	*	CONCRETE SLAB
7	2	BALL VALVES - BRASS OR S.S. (PROVIDED WITH BFP ASS'Y)

NOTE:
- FIELD ADJUST AND CUT ITEM 5 TO THE PROPER LENGTH.
- MINIMUM CLEARANCE OF 24" TO BE MAINTAINED AROUND DEVICE FOR TESTING.
- ENTIRE ASSEMBLY TO BE PAINTED SAFETY BLUE.
- CONCRETE SLAB TO EXTEND 12" MIN. AROUND ENTIRE DEVICE.
- DEVICE MUST BE LISTED WITH THE UNIVERSITY OF SOUTHERN CALIFORNIA FOUNDATION FOR CROSS CONNECTION CONTROL AND HYDRAULIC RESEARCH.

CREATED 02/24/03
REVISED

REDUCED PRESSURE BACKFLOW PREVENTER (SINGLE SERVICE: 3/4", 1", 1-1/2", 2")

PASCO COUNTY UTILITIES

DETAIL 11

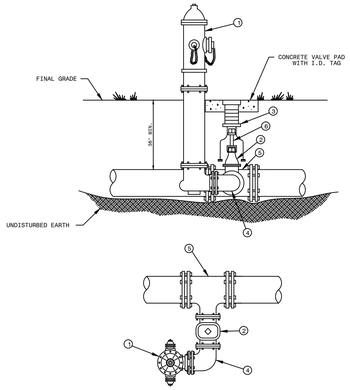

MATERIALS		
ITEM	QUANT.	DESCRIPTION
1	1	HYDRANT, FIRE (5 1/4" VALVE MIN.), PAINTED YELLOW
2	1	6" VALVE, GATE, MJ RESILIENT WEDGE
3	1	BOX, VALVE SLIP TYPE
4	1	6" BEND, ANCHORING, D.I.
5	1	TEE, ANCHORING, MJ
6	*	VALVE EXTENSION ROD, AS NECESSARY (3' MAX. BELOW GRADE)

CREATED 02/24/03
REVISED

FIRE HYDRANT PARALLEL TO THE MAIN

PASCO COUNTY UTILITIES

DETAIL 22

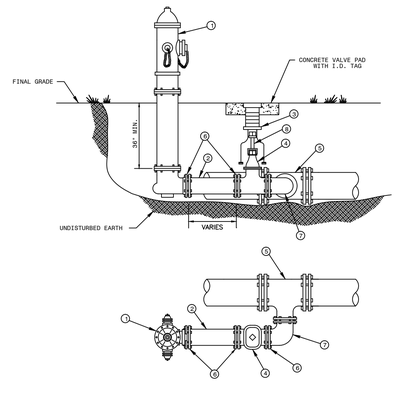

MATERIALS		
ITEM	QUANT.	DESCRIPTION
1	1	HYDRANT, FIRE (5 1/4" VALVE MIN.), PAINTED YELLOW
2	*	6" PIPE, P.V.C. (DR-18)
3	1	BOX, VALVE SLIP TYPE
4	1	6" VALVE, GATE, M.J. RESILIENT WEDGE
5	1	TEE, ANCHORING, M.J.
6	*	6" RESTRAINER GLAND (MEGALUG)
7	1	BEND, ANCHORING, D.I.
8	*	VALVE EXTENSION ROD, AS NECESSARY (3' MAX. BELOW GRADE)

CREATED 02/24/03
REVISED

FIRE HYDRANT PARALLEL TO THE MAIN

PASCO COUNTY UTILITIES

DETAIL 23

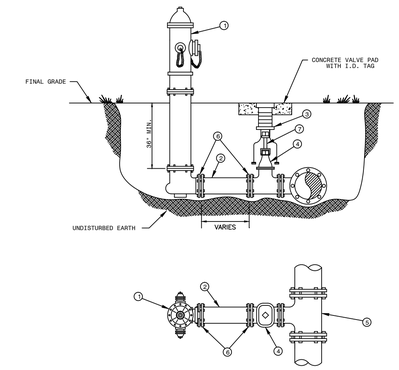

MATERIALS		
ITEM	QUANT.	DESCRIPTION
1	1	HYDRANT, FIRE (5 1/4" VALVE MIN.), PAINTED YELLOW
2	*	6" PIPE, P.V.C. (DR-18)
3	1	BOX, VALVE SLIP TYPE
4	1	6" VALVE, GATE, M.J. RESILIENT WEDGE
5	1	TEE, ANCHORING, M.J.
6	*	6" RESTRAINER GLAND (MEGALUG)
7	*	VALVE EXTENSION ROD, AS NECESSARY (3' MAX. BELOW GRADE)

CREATED 02/24/03
REVISED

FIRE HYDRANT PERPENDICULAR TO THE MAIN

PASCO COUNTY UTILITIES

DETAIL 24

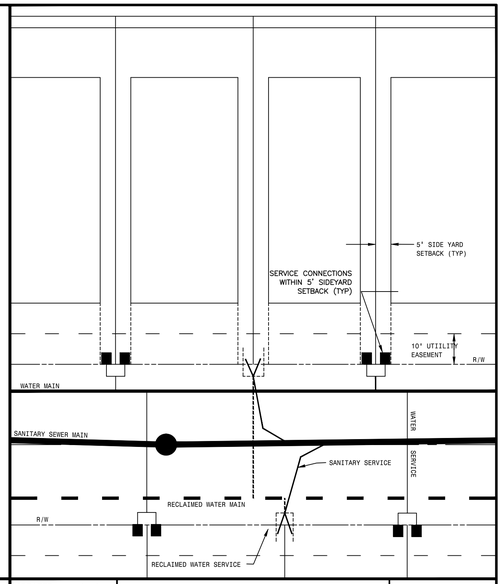

CREATED 02/24/03
REVISED

STANDARD 40' (DETACHED) SINGLE FAMILY TYPICAL UTILITY CONNECTION DETAIL

PASCO COUNTY UTILITIES

DETAIL 21

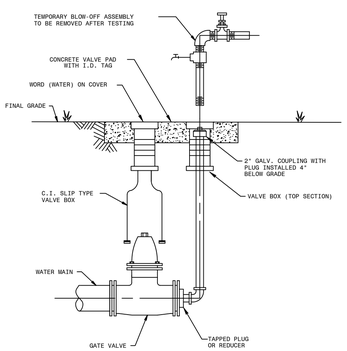

NOTES:
- MECHANICAL JOINTS/UNDERGROUND PIPING SHALL BE RESTRAINED AS SPECIFIED IN JOINT RESTRAINT TABLE (DETAIL 46)
- VALVE EXTENSION ROD SHALL BE UTILIZED, AS NECESSARY, SO THAT VALVE OPERATING NUT IS A MAXIMUM OF 3' BELOW GRADE.

CREATED 02/24/03
REVISED

PERMANENT BLOW-OFF DETAIL

PASCO COUNTY UTILITIES

DETAIL 25

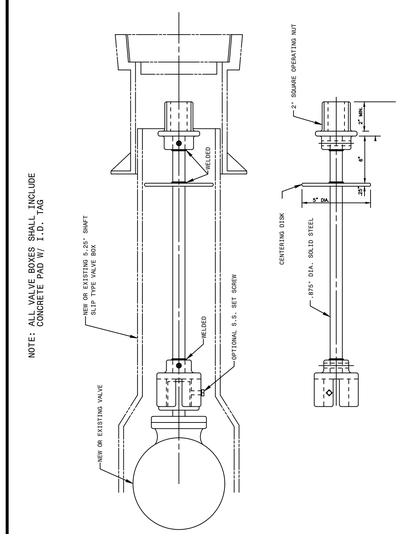

CREATED 02/24/03
REVISED

VALVE EXTENSION RODS

PASCO COUNTY UTILITIES

DETAIL 26

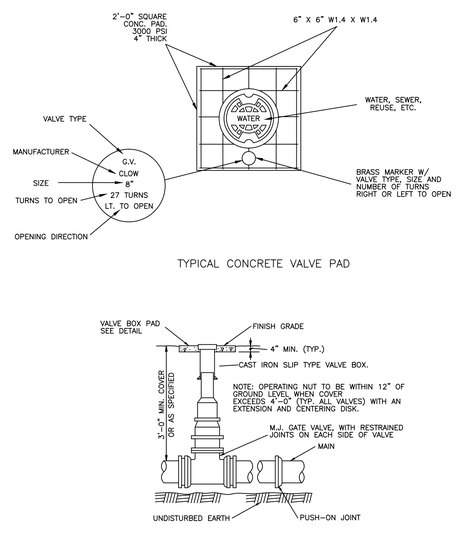

CREATED 02/24/03
REVISED

VALVE BOX DETAIL SLIP TYPE

PASCO COUNTY UTILITIES

DETAIL 27

PIPE RE□□R□I□□ LE□□□□□ I□ FEE□ □OMMO□ FI□□I□□□

W□□ER M□I□□ - □E□□ PRE□□□RE □5□P□I						
		FI□□□□ □□PE				
		11-1/4°	22-1/2°	45°	90°	□E□□ E□□
PIPE □□E	□"	2□	□□	□□	2□□	□5□
	□"	□□	□□	□2□	2□□	□□□
	□"	□□	□□	□5□	□□□	□2□
	□□"	□□	□□	□□□	□□□	□□□
	□2"	5□	□□□	2□□	5□□	□□□□
	□□"	□□	□□□	2□□	□□□	□□□□
	2□"	□□	□5□	□□□	□□□	□□□□
	2□"	□□	□□□	□□□	□□□	2□□□

FOR□E M□I□□ - □E□□ PRE□□□RE □□□P□I						
		FI□□I□□ □□PE				
		11-1/4°	22-1/2°	45°	90°	□E□□ E□□
PIPE □□E	□"	□□	□□	□□	□□□	□□□
	□"	2□	□□	□□	□□□	□2□
	□"	2□	5□	□□□	2□□	55□
	□□"	□□	□□	□2□	2□□	□□□
	□2"	□□	□□	□□□	□□□	□□□
	□□"	□□	□□	□□□	□2□	□□□
	2□"	5□	□□□	2□□	5□□	□□□□
	2□"	□□	□□□	2□□	5□□	□□□□

RE□□R□I□□LE□□□□□ □RE ME□□□RE□ FROM □□E □E□□ER LI□E OF □□E FI□□□□ □LO□□ □□E PIPE I□ □O□□ □IRE□□IO□□ (E□□EP□□E□□ E□□□)□

CREATED 02/24/03
REVISED

RESTRAINED JOINT TABLE COMMON FITTINGS

PASCO COUNTY UTILITIES

DETAIL 28

PIPE RE□□R□I□□ LE□□□□□ I□ FEE□ □EE□ (□R□□□□ □I□E)

W□□ER M□I□□ - □E□□ PRE□□□RE □5□P□I									
		□R□□□□ □I□E							
		□"	□"	□"	□"	□□"	2"	□"	2□"	2□"
R□□□I□E	□"	□□	□□□	□□□	—	—	—	—	—	—
	□"	2□	□□□	2□□	□□□	—	—	—	—	—
	□"	□□	2□	22□	□□□	52□	—	—	—	—
	□"	□□	□□	□□□	□5□	□□□	□2□	—	—	—
	□□"	□□	□□	□□□	□□□	□□□	5□□	□□□	—	—
	□2"	□□	□□	□□	25□	□□□	55□	□□□	□□□□	—
	□□"	□□	□□	□□	□□□	□□□	□□□	□5□	□□□	□□□□
	2□"	□□	□□	□□	2□	22□	□□□	□□□	□□□	□□□□
	2□"	□□	□□	□□	□□	□□□	□□□	□□□	□□□	□□□□

RE□□R□I□□LE□□□□□ □RE ME□□□RE□ FROM □□E □E□□ER LI□E OF □□E □E□□ER LI□E OF □□E □E□□LO□□ □□E □R□□□□ FOR □□E □I□□□□□E I□□□□E I□□□□E □□□□ MI□IM□M OF 5 FEE□ OF RE□□R□I□E□ PIPE M□□□□E I□□□□LLE□□O□ □O□ R□□□ OF □□E □EE□ME□□L□□ □□PE RE□□R□I□ER□ □RE RE□□IRE□□O□ □LL □O□I□□□

CREATED 02/24/03
REVISED

RESTRAINED JOINT TABLE TEES (BRANCH SIDE)

PASCO COUNTY UTILITIES

DETAIL 29

DATE	DESCRIPTION	BY
	REVISIONS	

CLEARVIEW LAND DESIGN, P.L.
Engineering Business C.A. No.: 28858
1213 E. 6th Avenue, Tampa, Florida 33605
Office: 813-223-3919 Fax: 813-223-3975

DATE:
JORDAN A. SCHRADER P.E. NO. 74798
FLORIDA PROFESSIONAL ENGINEER

WATER & RECLAIMED WATER SYSTEM DETAILS

JOB NO. NLC-BX-015
DESIGN SMIRCH
DRAWN FINNEY
DATE 08/28/2014
FILE WD

BEXLEY BOULEVARD 1ST EXTENSION

PREPARED FOR: **NNP-BEXLEY, LLC**

Elevations based on North American Vertical Datum 1988 (NAVD 88) Conversion from NAVD 88 to NGVD 29 = +0.83 Feet

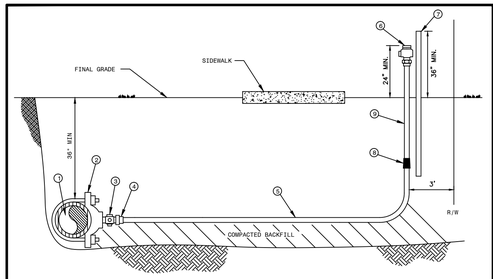

MATERIALS		
ITEM	QUANT.	DESCRIPTION
1	*	PIPE, PVC (DR-18) OR D.I.P.
2	1	SADDLE, SERVICE W/ 1" F.I.P. THREAD
3	1	1" CORPORATION (W.I.P. x COMP.)
4	1	1" INSERT (STAINLESS STEEL)
5	*	1" TUBING, POLYETHYLENE
6	1	3/4" WATER OR 1" REUSE CURB STOP BALL VALVE W/ LOCK WINGS (F.I.P. x COMP.)
7	1	2" x 4" P.T. MARKER STAKE
8	1	1" x 3/4" COUPLING (COMP. x COMP.) WATER ONLY
9	1	3/4" WATER OR 1" REUSE TUBING, POLYETHYLENE 4'

NOTES: - ALL FITTINGS FOR POLYETHYLENE TUBING ARE BRASS COMPRESSION TYPE.
- A VALVE BOX MAY BE REQUIRED AS SPECIFIED BY THE ENGINEER.
- CURB STOP TO TERMINATE 24" ABOVE GROUND AT R/W LINE.
- REUSE CURB STOPS = 1" / WATER CURB STOPS = 3/4"
- TUBING TO BE YARDLEY 3406 OR EQUAL.
- SADDLES 2" - 3" TO BE BRASS FULL CIRCLE TYPE.
- SADDLES 4" AND LARGER TO BE D.I. DUAL STRAP TYPE.
- CURB STOPS TO BE TIED TO MARKER STAKE.
- SADDLE MAY BE INSTALLED AT ANGLE (WITHIN 45° OF HORIZONTAL).
- MARKER STAKES PAINTED SAFETY BLUE FOR WATER, PURPLE FOR REUSE.

CREATED 02/24/03 REVISED	SINGLE NEAR SIDE WATER SERVICE - 3/4" SINGLE NEAR SIDE REUSE SERVICE - 1" POLYETHYLENE TUBING	PROVI: E: FOR I: FORM: IO: L P: RPO: E: O: L: O MO: IFI: IO: WI: O: WRI: E: P: PPROV: L
	PASCO COUNTY UTILITIES	DETAIL 16

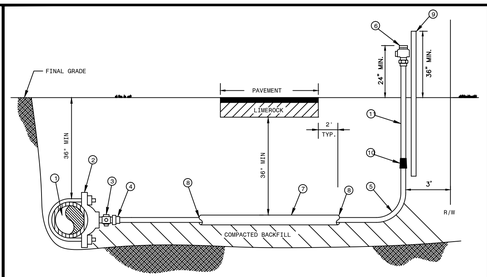

MATERIALS		
ITEM	QUANT.	DESCRIPTION
1	*	PIPE, PVC (DR-18) OR D.I.P.
2	1	SADDLE, SERVICE W/ 1" F.I.P. THREAD
3	1	1" CORPORATION (W.I.P. x COMP.)
4	1	1" INSERT (STAINLESS STEEL)
5	*	1" TUBING, POLYETHYLENE
6	1	3/4" WATER OR 1" REUSE CURB STOP BALL VALVE W/ LOCK WINGS (F.I.P. x COMP.)
7	*	2" CASING, PVC OR HDPE - 2' BEYOND EDGE PAVEMENT
8	*	SEALER, RAM-NEK
9	1	2" x 4" P.T. MARKER STAKE
10	1	1" x 3/4" COUPLING (COMP. x COMP.) WATER ONLY
11	1	3/4" WATER OR 1" REUSE TUBING, POLYETHYLENE 4'

NOTES: - ALL FITTINGS FOR POLYETHYLENE TUBING ARE BRASS COMPRESSION TYPE.
- A VALVE BOX MAY BE REQUIRED AS SPECIFIED BY THE ENGINEER.
- CURB STOP TO TERMINATE 24" ABOVE GROUND AT R/W LINE.
- REUSE CURB STOPS = 1" / WATER CURB STOPS = 3/4"
- TUBING TO BE YARDLEY 3406 OR EQUAL.
- SADDLES 2" - 3" TO BE BRASS FULL CIRCLE TYPE.
- SADDLES 4" AND LARGER TO BE D.I. DUAL STRAP TYPE.
- CURB STOPS TO BE TIED TO MARKER STAKE.
- SADDLE MAY BE INSTALLED AT ANGLE (WITHIN 45° OF HORIZONTAL).
- MARKER STAKES PAINTED SAFETY BLUE FOR WATER, PURPLE FOR REUSE.

CREATED 02/24/03 REVISED	SINGLE FAR SIDE WATER SERVICE - 3/4" SINGLE FAR SIDE REUSE SERVICE - 1" POLYETHYLENE TUBING	PROVI: E: FOR I: FORM: IO: L P: RPO: E: O: L: O MO: IFI: IO: WI: O: WRI: E: P: PPROV: L
	PASCO COUNTY UTILITIES	DETAIL 17

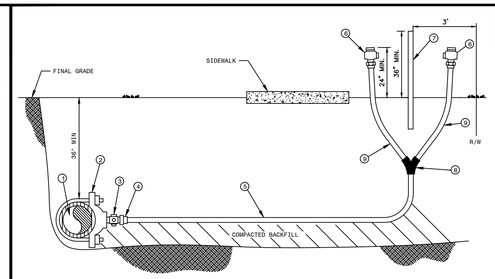

MATERIALS		
ITEM	QUANT.	DESCRIPTION
1	*	PIPE, PVC (DR-18) OR D.I.P.
2	1	SADDLE, SERVICE W/ 1" F.I.P. THREAD
3	1	1" CORPORATION (W.I.P. x COMP.)
4	1	1" INSERT (STAINLESS STEEL)
5	*	1" TUBING, POLYETHYLENE
6	1	3/4" WATER OR 1" REUSE CURB STOP BALL VALVE W/ LOCK WINGS (F.I.P. x COMP.)
7	1	2" x 4" P.T. MARKER STAKE
8	1	1" x 3/4" WYE BRANCH (COMP. x COMP.) WATER ONLY
9	1	1" x 1" WYE BRANCH (COMP. x COMP.) REUSE ONLY
10	1	3/4" WATER OR 1" REUSE TUBING, POLYETHYLENE 4'

NOTES: - ALL FITTINGS FOR POLYETHYLENE TUBING ARE BRASS COMPRESSION TYPE.
- A VALVE BOX MAY BE REQUIRED AS SPECIFIED BY THE ENGINEER.
- CURB STOP TO TERMINATE 24" ABOVE GROUND AT R/W LINE.
- REUSE CURB STOPS = 1" / WATER CURB STOPS = 3/4"
- TUBING TO BE YARDLEY 3406 OR EQUAL.
- SADDLES 2" - 3" TO BE BRASS FULL CIRCLE TYPE.
- SADDLES 4" AND LARGER TO BE D.I. DUAL STRAP TYPE.
- CURB STOPS TO BE TIED TO MARKER STAKE.
- SADDLE MAY BE INSTALLED AT ANGLE (WITHIN 45° OF HORIZONTAL).
- MARKER STAKES PAINTED SAFETY BLUE FOR WATER, PURPLE FOR REUSE.

CREATED 02/24/03 REVISED	DOUBLE NEAR SIDE WATER SERVICE - 3/4" DOUBLE NEAR SIDE REUSE SERVICE - 1" POLYETHYLENE TUBING	PROVI: E: FOR I: FORM: IO: L P: RPO: E: O: L: O MO: IFI: IO: WI: O: WRI: E: P: PPROV: L
	PASCO COUNTY UTILITIES	DETAIL 18

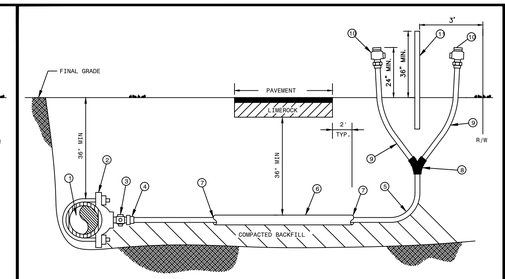

MATERIALS		
ITEM	QUANT.	DESCRIPTION
1	*	PIPE, PVC (DR-18) OR D.I.P.
2	1	SADDLE, SERVICE W/ 1" F.I.P. THREAD
3	1	1" CORPORATION (W.I.P. x COMP.)
4	1	1" INSERT (STAINLESS STEEL)
5	*	1" TUBING, POLYETHYLENE
6	*	2" CASING, PVC OR HDPE - 2' BEYOND EDGE PAVEMENT
7	*	SEALER, RAM-NEK
8	1	WYE BRANCH FOR POLY TUBING
9	2	3/4" WATER OR 1" REUSE TUBING, POLYETHYLENE 4'
10	2	3/4" WATER OR 1" REUSE CURB STOP BALL VALVE W/ LOCK WINGS (F.I.P. x COMP.)
11	1	2" x 4" P.T. MARKER STAKE

NOTES: - ALL FITTINGS FOR POLYETHYLENE TUBING ARE BRASS COMPRESSION TYPE.
- A VALVE BOX MAY BE REQUIRED AS SPECIFIED BY THE ENGINEER.
- CURB STOP TO TERMINATE 24" ABOVE GROUND AT R/W LINE.
- REUSE CURB STOPS = 1" / WATER CURB STOPS = 3/4"
- TUBING TO BE YARDLEY 3406 OR EQUAL.
- SADDLES 2" - 3" TO BE BRASS FULL CIRCLE TYPE.
- SADDLES 4" AND LARGER TO BE D.I. DUAL STRAP TYPE.
- CURB STOPS TO BE TIED TO MARKER STAKE.
- SADDLE MAY BE INSTALLED AT ANGLE (WITHIN 45° OF HORIZONTAL).
- MARKER STAKES PAINTED SAFETY BLUE FOR WATER, PURPLE FOR REUSE.

CREATED 02/24/03 REVISED	WATER AND REUSE LATERAL SERVICE 3/4" (DOUBLE - FAR SIDE) POLYETHYLENE TUBING	PROVI: E: FOR I: FORM: IO: L P: RPO: E: O: L: O MO: IFI: IO: WI: O: WRI: E: P: PPROV: L
	PASCO COUNTY UTILITIES	DETAIL 19

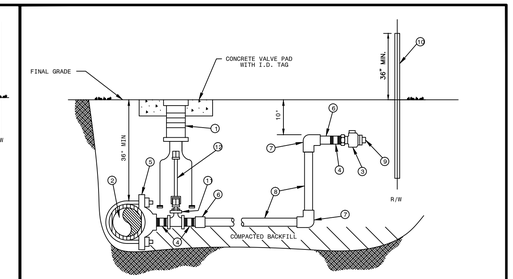

MATERIALS		
ITEM	QUANT.	DESCRIPTION
1	1	BOX, VALVE CAST IRON SLIP TYPE
2	*	4" & LARGER PIPE, PVC (DR-18) OR D.I.P. (CLASS 50)
3	2	1 1/2", 2" CURB STOP BALL VALVE W/ LOCK WINGS (FIP x FIP OR FIP x CTS)
4	3	1 1/2", 2" NIPPLE, BRASS OR STAINLESS STEEL
5	1	1 1/2", 2" SADDLE, SERVICE (I.P. THREADS)
6	2	1 1/2", 2" ADAPTER (PVC SCH 40 / SLIP x FPT OR BRASS MIP x CTS)
7	2	1 1/2", 2" 90° ELBOW (SLIP x SLIP) SCH 40 (NOT REQUIRED FOR HDPE)
8	*	1 1/2", 2" PIPE, PVC (SCH 40) OR HDPE (3406) - LENGTH VARIES
9	1	1 1/2", 2" PLUG, THREADED (W/ TEFLON TAPE)
10	1	2" x 4" P.T. MARKER STAKE
11	1	2" GATE VALVE, IRON BODY W/ SQUARE NUT
12	1	VALVE EXTENSION ROD, AS REQUIRED (3' MAX. BELOW GRADE)

NOTE: - A VALVE BOX SHALL BE REQUIRED ON ALL GATE VALVES.
- SERVICE SADDLES SHALL BE INSTALLED ON ALL TAPS TO P.V.C. (DR-18) WATER MAINS.
- 2" GATE VALVE TO BE RESILIENT WEDGE IRON BODY TYPE WITH 2" OPERATING UNIT.
- SADDLES 4" AND LARGER TO BE DUCTILE IRON DUAL STRAP TYPE.
- 1 1/2" BRASS REDUCER BUSHING REQUIRED WITH ITEM NO. 11 FOR 1 1/2" SERVICE.
- MARKER STAKES PAINTED SAFETY BLUE FOR WATER, PURPLE FOR REUSE.
- 4" DIAMETER CASING REQUIRED FOR ROAD CROSSINGS

CREATED 02/24/03 REVISED	WATER AND REUSE LATERAL SERVICE 1 1/2" OR 2" SERVICE LATERAL PVC (SCHEDULE 40)	PROVI: E: FOR I: FORM: IO: L P: RPO: E: O: L: O MO: IFI: IO: WI: O: WRI: E: P: PPROV: L
	PASCO COUNTY UTILITIES	DETAIL 20

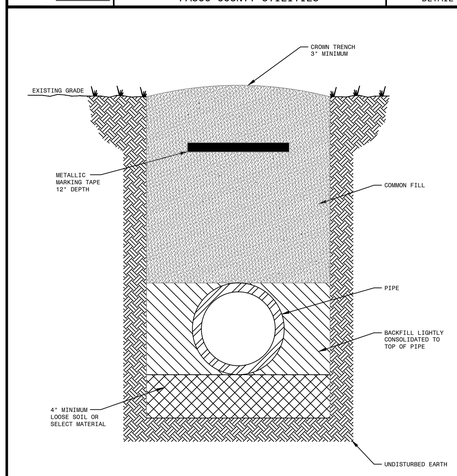

NOTES: -LOOSE SOIL OR SELECT MATERIAL IS NATIVE SOIL EXCAVATED FROM THE TRENCH FREE OF ROCKS AND FOREIGN MATERIAL.
-COMMON FILL TO BE PLACED AND COMPACTED IN 12" LAYERS. ROLLING EQUIPMENT SHALL NOT BE USED FOR COMPACTION UNTIL A MINIMUM OF 18" OF COMMON FILL HAS BEEN PLACED AND COMPACTED OVER THE PIPE. THREE FEET OF FILL SHALL BE PLACED BEFORE A HYDROHAMMER MAY BE USED FOR COMPACTION.

NTS

CREATED 02/24/03 REVISED	PIPE LAYING CONDITIONS STANDARD UNPAVED AREAS	PROVI: E: FOR I: FORM: IO: L P: RPO: E: O: L: O MO: IFI: IO: WI: O: WRI: E: P: PPROV: L
	PASCO COUNTY UTILITIES	DETAIL 32

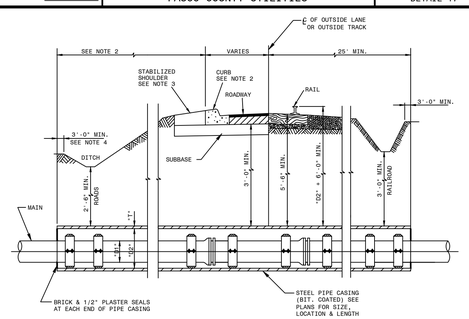

NOTE: 1. VERTICAL DIMENSIONS ARE TYPICAL FOR MAINS.
2. CASINGS SHALL TERMINATE 8' MINIMUM BEYOND EDGE OF PAVEMENT.
3. CASINGS SHALL HAVE 30" MINIMUM COVER UNDER DITCH BOTTOMS AND 36" ELSEWHERE.
4. GRAVITY SEWERS SHALL BE PROPERLY ANCHORED TO PREVENT FLOATATION WITH SPACERS ADJUSTED TO PROVIDE THE SLOPE REQUIRED.
5. SEE SECTION B.2 FOR CASING SIZE.

CARRIER PIPE (INCHES)	CASING PIPE (INCHES)	CASING WALL THICKNESS (INCHES)
4	12	1/4
6	16	1/4
8	16	1/4
10	24	5/16
12	24	5/16
16	30	3/8
20	36	3/8
24	42	3/8
30	48	3/8
36	54	1/2
42	60	1/2
48	66	1/2

CREATED 02/24/03 REVISED	JACK & BORE DETAIL	PROVI: E: FOR I: FORM: IO: L P: RPO: E: O: L: O MO: IFI: IO: WI: O: WRI: E: P: PPROV: L
	PASCO COUNTY UTILITIES	DETAIL 35

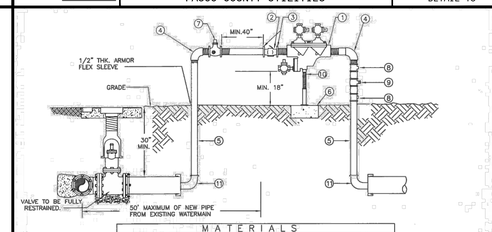

MATERIALS		
ITEM	QUANT.	DESCRIPTION
1	1	2" BACKFLOW PREVENTER ASSEMBLY, REDUCED PRESSURE ZONE
2	1	2" METER FURNISHED BY PASCO COUNTY UTILITIES
3	2	BRASS-METER FLANGES OR ADAPTORS
4	2	2" ELBOWS – GALV. 90°
5	2	2" RISER – GALV.
6	*	CONCRETE SLAB
7	1	2" VALVE – BRASS OR S.S.
8	2	TEE/ VALVES – BRASS OR S.S.
9	1	2" GATE VALVE – BRASS OR S.S.
10	1	PIPE STAND (SUPPORT)
11	2	M.J. CAP WITH 2" TAP

NOTE: – CONTRACTOR/CUSTOMER SHALL APPLY AT PASCO COUNTY UTILITIES CUSTOMER SERVICE FOR TEMPORARY WATER SERVICE AT LEAST THREE DAYS PRIOR TO REQUIRED SERVICE DATE.
– THE METER WILL BE FURNISHED, INSTALLED AND INITIAL READING TAKEN BY PASCO COUNTY UTILITIES. ALL FITTINGS, PIPING, VALVES AND MATERIALS INCLUDING THE PASCO COUNTY APPROVED REDUCED PRESSURE BACKFLOW PREVENTION DEVICE SHALL BE FURNISHED AND INSTALLED BY THE CONTRACTOR/CUSTOMER.
– CONTRACTOR/CUSTOMER FURNISHED REDUCED PRESSURE BACKFLOW PREVENTION DEVICE MUST BE INSTALLED BEFORE THE METER IS INSTALLED BY PASCO COUNTY UTILITIES. THE APPROVED BACKFLOW PREVENTION DEVICE SHALL BE TESTED AND CERTIFIED BY PASCO COUNTY UTILITIES CERTIFIED BACKFLOW PREVENTION TECHNICIAN AT TIME OF METER INSTALLATION.
– CONTRACTOR/CUSTOMER SHALL PROTECT THE JUMPER/METER ASSEMBLY FROM DAMAGE.
– CONTRACTOR/CUSTOMER IS RESPONSIBLE FOR BACTERIOLOGICAL TESTING AFTER CONNECTION OF TEMPORARY WATER SERVICE.
– TEMPORARY CONSTRUCTION JUMPER/METER ASSEMBLY SHALL NOT BE REMOVED UNTIL SYSTEM IS ACCEPTED AND DEPARTMENT OF HEALTH CERTIFICATION AND CLEARANCE FOR SERVICE FORM HAS BEEN RECEIVED BY PASCO COUNTY UTILITIES.
– WHEN THE NEW SYSTEM IS ACCEPTED AND THE FINAL METER READING TAKEN BY PASCO COUNTY, THE TEMPORARY CONSTRUCTION JUMPER/METER ASSEMBLY MUST BE COMPLETELY REMOVED FROM M.J. CAP TO M.J. CAP AND A NEW WATER MAIN IS TO BE CHLORINATED AND INSTALLED COMPLETING THE FINAL CONNECTION.
– BY APPLYING FOR SERVICE, CONTRACTOR/CUSTOMER AGREES TO TAKE WATER SERVICE FROM PASCO COUNTY UTILITIES IN ACCORDANCE WITH THE APPROPRIATE RATE SCHEDULE AND IN ACCORDANCE WITH PASCO COUNTY UTILITIES RULES AND REGULATION.

CREATED 11/18/05 REVISED	TEMPORARY CONSTRUCTION WATER SERVICE	PROVIDED FOR INFORMATIONAL PURPOSES ONLY. NO MODIFICATIONS WITHOUT WRITTEN PCU APPROVAL
	PASCO COUNTY UTILITIES	DETAIL 01

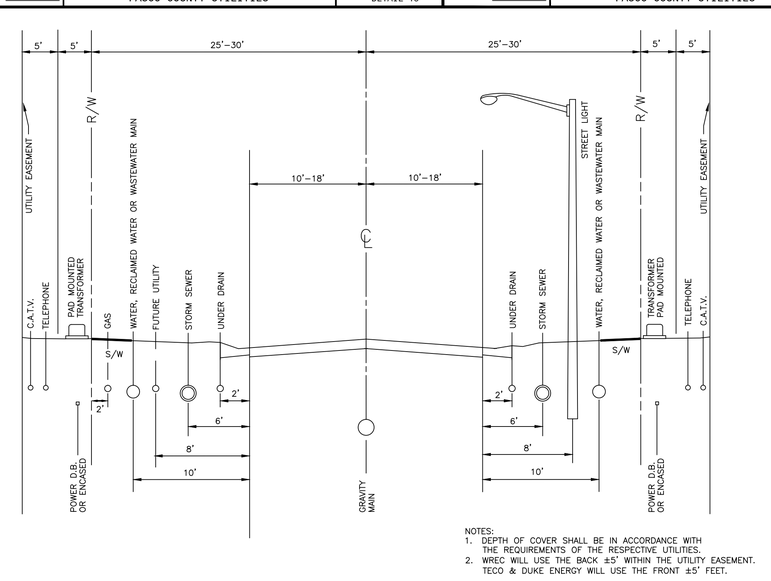

NOTES:
1. DEPTH OF COVER SHALL BE IN ACCORDANCE WITH THE REQUIREMENTS OF THE RESPECTIVE UTILITIES.
2. WREC WILL USE THE BACK ±5' WITHIN THE UTILITY EASEMENT. TECO & DUKE ENERGY WILL USE THE FRONT ±5' FEET.

RECOMMENDED UTILITY LOCATIONS

SCALE: N.T.S.

DATE	DESCRIPTION	BY
	REVISIONS	

CLEARVIEW LAND DESIGN, P.L.
Engineering Business C.A. No.: 28858
1213 E. 6th Avenue, Tampa, Florida 33605
Office: 813-223-3919 Fax: 813-223-3975

DATE:
JORDAN A. SCHRADER P.E. NO. 74798
FLORIDA PROFESSIONAL ENGINEER

WATER & RECLAIMED WATER SYSTEM DETAILS

JOB NO. NLC-BX-015	BEXLEY BOULEVARD 1ST EXTENSION
DESIGN SMIRCH	
DRAWN DRM	PREPARED FOR: NNP-BEXLEY, LLC
DATE 08/28/2014	Elevations based on North American Vertical Datum 1988 (NAVD 88) Conversion from NAVD 88 to NGVD 29 = +0.83 Feet
FILE WD	SHEET 42 OF 46 SHEETS

NOTE:
ALL PRESSURIZED PIPE WILL BE INSTALLED AT A MAXIMUM DEPTH OF FIVE FEET. TO MEET THIS REQUIREMENT, AT CROSSINGS WITH STORM SEWER OR SANITARY SEWER PIPING, PRESSURIZED PIPE MAY NEED TO BE CONSTRUCTED ON TOP. IF A MINIMUM THREE FEET OF COVER IS NOT ACHIEVABLE, A CONCRETE SHOCK PAD WILL BE INSTALLED (SEE DETAIL BELOW).

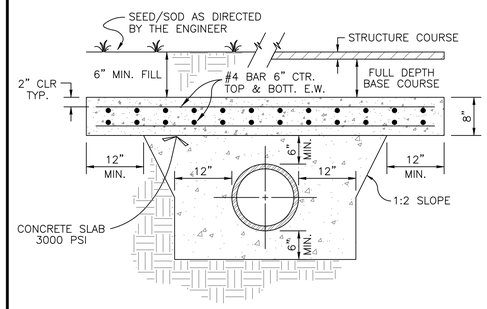

CONCRETE SHOCK PAD

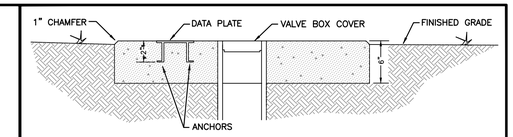

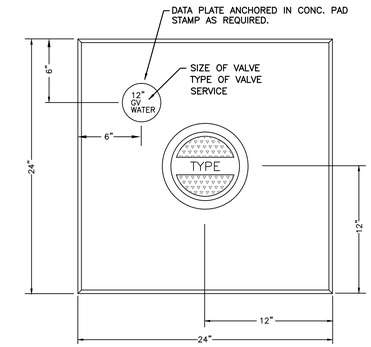

CONCRETE VALVE PAD
(FOR UNPAVED AREAS)

NOTES:

CONCRETE TO BE TYPE I GENERAL PORTLAND CEMENT WITH 3/4" TOP SIZE AGGREGATE AND SHALL DEVELOP A 28-DAY STRENGTH OF 3000 P.S.I.

CONCRETE VALVE PAD SHALL BE POURED IN PLACE AND SHALL BE SET 1/2" ABOVE FINISHED GRADE

DATE	DESCRIPTION	BY
REVISIONS		

CLEARVIEW LAND DESIGN, P.L.
Engineering Business C.A. No.: 28858
1213 E. 6th Avenue, Tampa, Florida 33605
Office: 813-223-3919 Fax: 813-223-3975

DATE:
JORDAN A. SCHRADER P.E. NO. 74798
FLORIDA PROFESSIONAL ENGINEER

WATER & RECLAIMED WATER SYSTEM DETAILS

JOB NO. NLC-BX-015	BEXLEY BOULEVARD 1ST EXTENSION
DESIGN SMIRCH	
DRAWN DRM	PREPARED FOR: NNP-BEXLEY, LLC
DATE 08/28/2014	Elevations based on North American Vertical Datum 1988 (NAVD 88) Conversion from NAVD 88 to NGVD 29 = +0.83 Feet
FILE WD	SHEET 43 OF 46 SHEETS

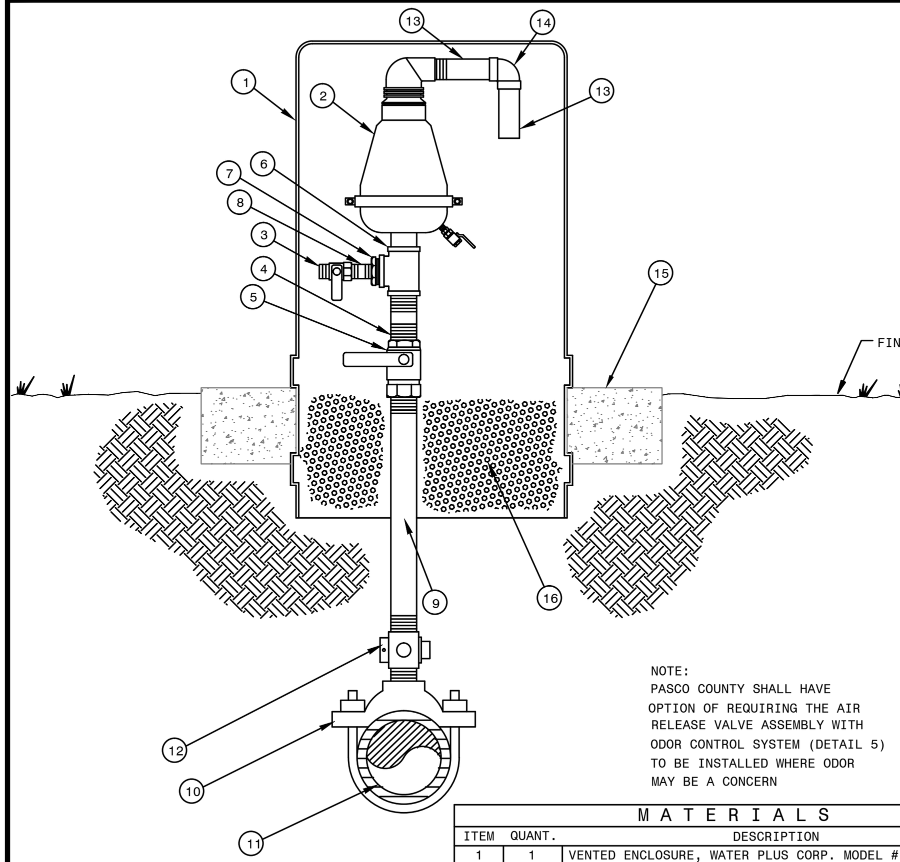

NOTE:
PASCO COUNTY SHALL HAVE OPTION OF REQUIRING THE AIR RELEASE VALVE ASSEMBLY WITH ODOR CONTROL SYSTEM (DETAIL 5) TO BE INSTALLED WHERE ODOR MAY BE A CONCERN

NOTE:

VENTED ENCLOSURE TO BE COLOR CODED AS FOLLOWS:

WATER MAIN – BLUE
FORCE MAIN – GREEN
REUSE MAIN – PURPLE

MATERIALS		
ITEM	QUANT.	DESCRIPTION
1	1	VENTED ENCLOSURE, WATER PLUS CORP. MODEL #131632
2	1	AIR RELEASE VALVE 2" NPT (SEE BELOW)
		SEWER AIR RELEASE VALVES SHALL BE ARI MODEL D-025
		WATER AIR RELEASE VALVES SHALL BE VALMATIC OR EQUAL
3	1	1" CURB STOP, S.S.
4	1	2" x 4" NIPPLE, S.S.
5	1	2" BALL VALVE, S.S.
6	1	2" TEE, S.S.
7	1	2" X 1" REDUCER, S.S.
8	1	1" SHORT NIPPLE, S.S.
9	1	2" PIPE, S.S. LENGTH AS REQUIRED
10	1	2" DOUBLE STRAP TAPPING SADDLE, S.S.
11	1	4" & LARGER PIPE, D.I. OR PVC (DR-18)
12	1	2" CORPORATION BRASS
13	2	1-1/2" PIPE, PVC, LENGTH AS REQUIRED
14	1	1-1/2" x 90° ELBOW, PVC
15	1	CONCRETE SLAB AROUND ENCLOSURE
16	1	#57 WHITE ROCK

CREATED 02/24/03
REVISED

STANDARD AIR RELEASE VALVE ASSEMBLY (VERTICAL PIPE LAYOUT)

PROVI□E□ FOR I□FORM□□IO□□L P□RPO□E□ O□L□□ □O MO□IFI□□□IO□□ WI□□O□□ WRI□□E□ P□□ □PPROV□L

PASCO COUNTY UTILITIES — DETAIL 4

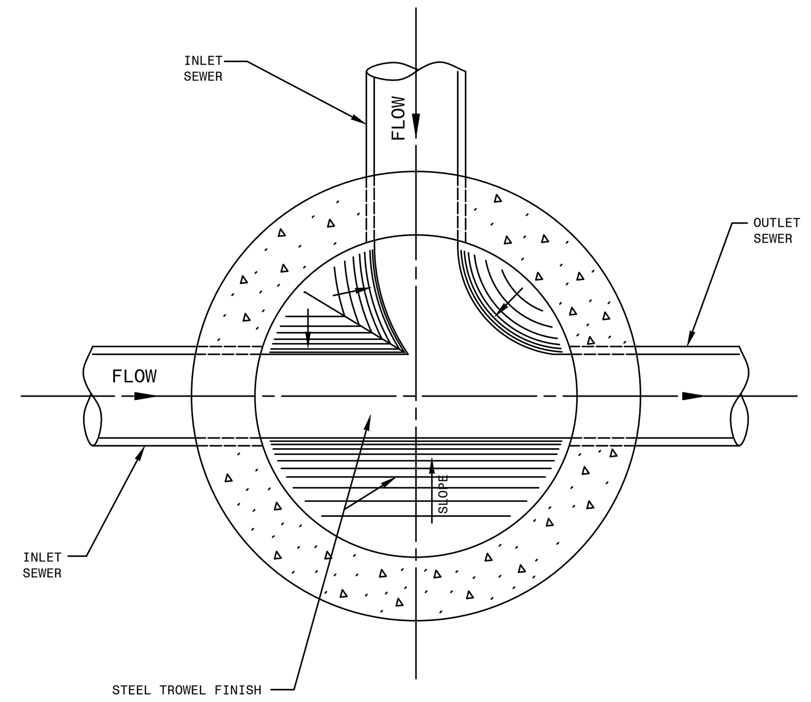

CREATED 02/24/03
REVISED

STANDARD MANHOLE (BENCH AND INVERTS)

PROVI□E□ FOR I□FORM□□IO□□L P□RPO□E□ O□L□□ □O MO□IFI□□□IO□□ WI□□O□□ WRI□□E□ P□□ □PPROV□L

PASCO COUNTY UTILITIES — DETAIL 36

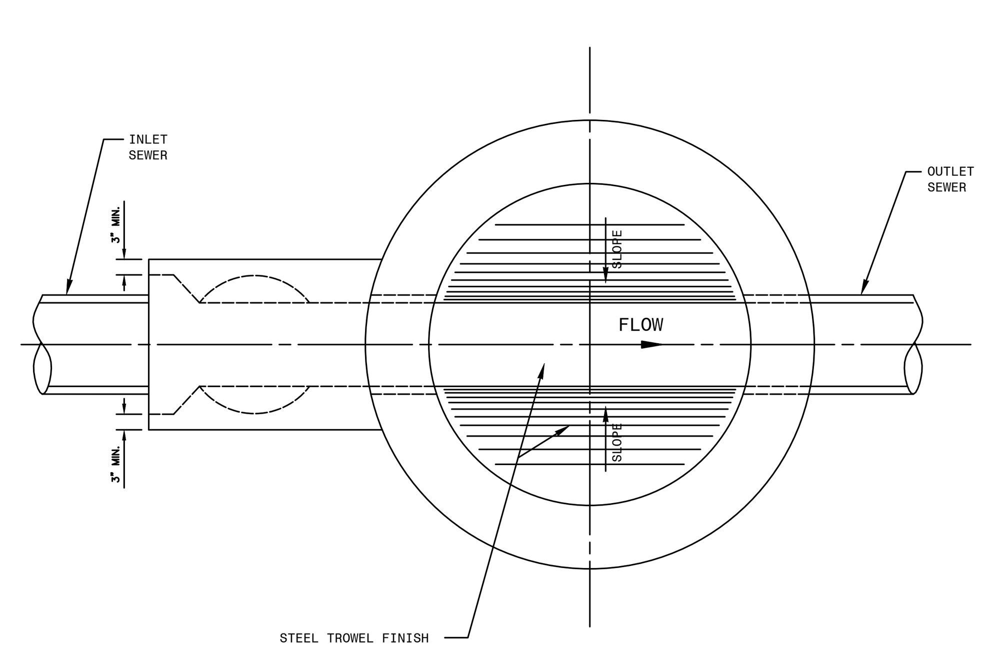

NOTE:
DROP MANHOLE TO BE USED WHEN THE DIFFERENCE BETWEEN INVERTS IS 2' OR MORE.

CREATED 02/24/03
REVISED

DROP MANHOLE (BENCH AND INVERTS)

PROVI□E□ FOR I□FORM□□IO□□L P□RPO□E□ O□L□□ □O MO□IFI□□□IO□□ WI□□O□□ WRI□□E□ P□□ □PPROV□L

PASCO COUNTY UTILITIES — DETAIL 37

NOTE:
PRECAST CONCRETE SHALL ATTAIN A MINIMUM COMPRESSIVE STRENGTH OF 4,000 p.s.i. AT 28 DAYS.

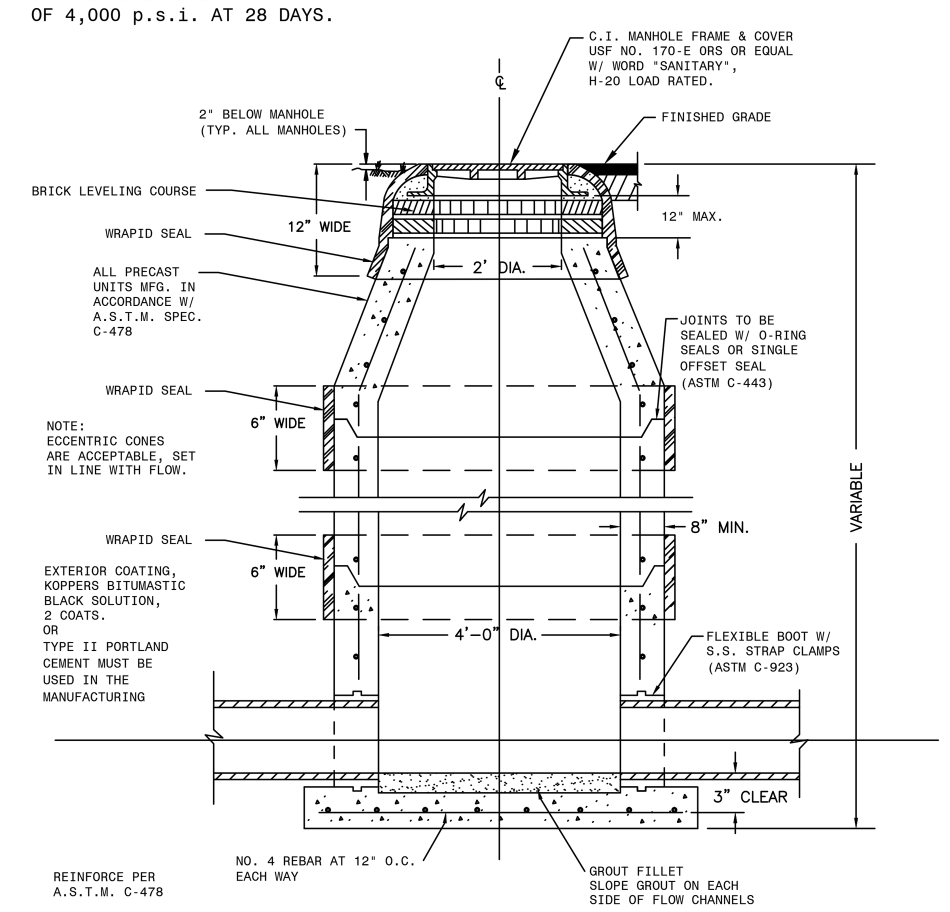

NOTE:
1. WRAPID SEAL MUST BE USED ON ALL JOINTS, CASTINGS AND RISER RINGS: ON ALL JOINTS ON AIR RELEASES, MANHOLES, GREASE/WATER, OIL/WATER SEPARATORS, AND WETWELLS.
2. WRAPID SEAL MUST BE USED IN ACCORDANCE WITH MANUFACTURES RECOMMENDATIONS.
3. PASCO COUNTY SHALL HAVE THE OPTION OF SPECIFYING THE TYPE OF INTERIOR LINING TO BE INSTALLED FOR EACH INDIVIDUAL MANHOLE.
4. PASCO COUNTY SHALL HAVE THE OPTION OF REQUIRING A NEGATIVE PRESSURE TEST PER ASTM C-1244
5. LIFT HOLES MUST NOT PENETRATE THE WALLS

CREATED 02/24/03
REVISED

STANDARD MANHOLE

PROVI□E□ FOR I□FORM□□IO□□L P□RPO□E□ O□L□□ □O MO□IFI□□□IO□□ WI□□O□□ WRI□□E□ P□□ □PPROV□L

PASCO COUNTY UTILITIES — DETAIL 38

NOTE:
ECCENTRIC CONES ARE ACCEPTABLE, SET IN LINE WITH FLOW.

EXTERIOR COATING, KOPPERS BITUMASTIC BLACK SOLUTION, 2 COATS. OR TYPE II PORTLAND CEMENT MUST BE USED IN THE MANUFACTURING PROCESS

NOTE:
PRECAST CONCRETE SHALL ATTAIN A MINIMUM COMPRESSIVE STRENGTH OF 4,000 p.s.i. AT 28 DAYS.

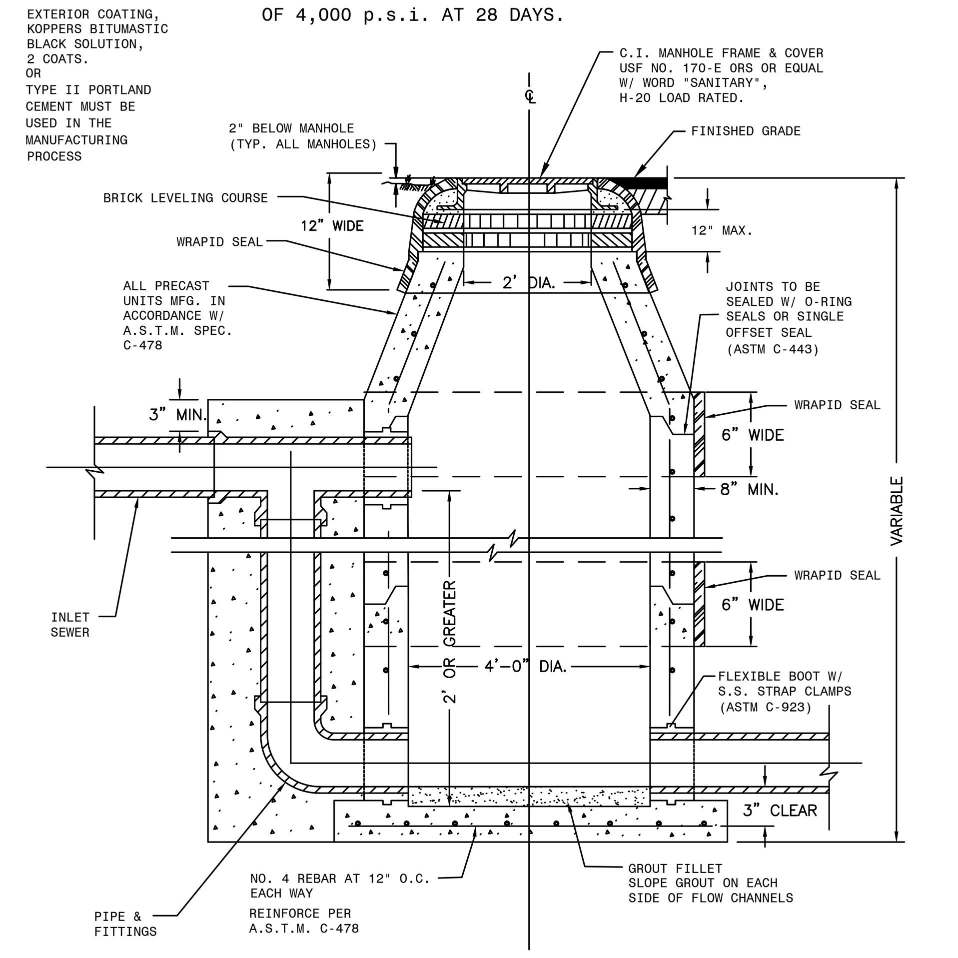

NOTE:
1. WRAPID SEAL MUST BE USED ON ALL JOINTS, CASTINGS AND RISER RINGS: ON ALL JOINTS ON AIR RELEASES, MANHOLES, GREASE/WATER, OIL/WATER SEPARATORS, AND WETWELLS.
2. WRAPID SEAL MUST BE USED IN ACCORDANCE WITH MANUFACTURES RECOMMENDATIONS.
3. PASCO COUNTY SHALL HAVE THE OPTION OF SPECIFYING THE TYPE OF INTERIOR LINING TO BE INSTALLED FOR EACH INDIVIDUAL MANHOLE.
4. PASCO COUNTY SHALL HAVE THE OPTION OF REQUIRING A NEGATIVE PRESSURE TEST PER ASTM C-1244
5. LIFT HOLES MUST NOT PENETRATE THE WALLS

CREATED 02/24/03
REVISED

DROP MANHOLE (PRE-CAST ONLY)

PROVI□E□ FOR I□FORM□□IO□□L P□RPO□E□ O□L□□ □O MO□IFI□□□IO□□ WI□□O□□ WRI□□E□ P□□ □PPROV□L

PASCO COUNTY UTILITIES — DETAIL 39

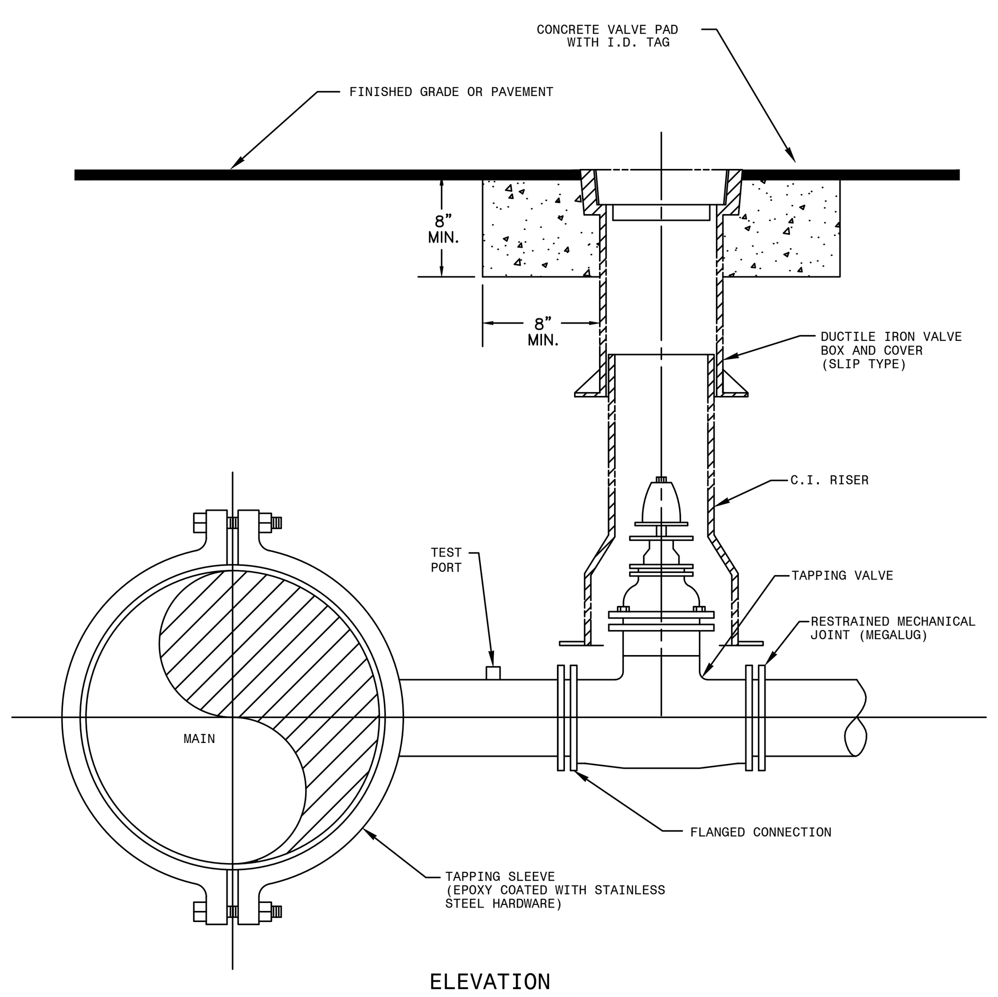

ELEVATION

NOTES:
- SADDLE CONNECTION WILL BE TESTED TO 150 PSI PRIOR TO TAPPING MAIN.
- MECHANICAL JOINTS/UNDERGROUND PIPING SHALL BE RESTRAINED AS SPECIFIED BY COUNTY/ENGINEER.
- VALVE EXTENSION ROD SHALL BE UTILIZED, AS NECESSARY, SO THAT VALVE OPERATING NUT IS A MAXIMUM OF 3' BELOW GRADE.

CREATED 02/24/03
REVISED

WATER, REUSE, AND FORCE MAIN TAPPING DETAIL W/ VALVE LOCATION

PROVI□E□ FOR I□FORM□□IO□□L P□RPO□E□ O□L□□ □O MO□IFI□□□IO□□ WI□□O□□ WRI□□E□ P□□ □PPROV□L

PASCO COUNTY UTILITIES — DETAIL 34

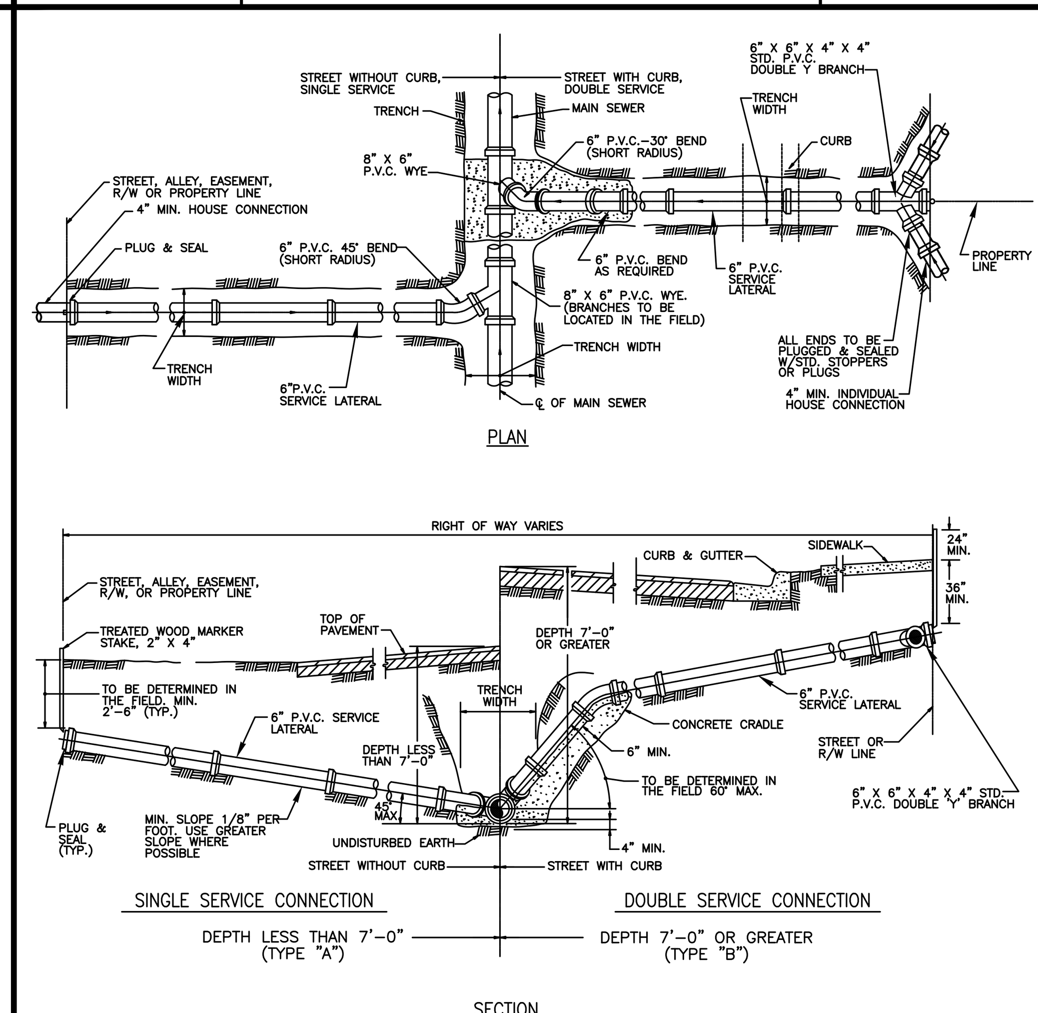

NOTE:
- CONTRACTOR SHALL MAKE, ON A CLEAN SET OF PLANS, THE FINAL STATIONING OR DISTANCE AND DIRECTION FROM MANHOLE OF EACH SERVICE LATERAL AND THEN GIVE TO ENGINEER FOR RECORD PURPOSES.
- PROVIDE 2" x 4" PRESSURE TREATED WOOD MARKER STAKE AT ALL SANITARY SERVICES (INCLUDE IN PIPE PRICE), TOP OF STAKE TO BE PAINTED WITH GREEN PAINT.
- THE MINIMUM DIAMETER OF ALL SERVICE LATERALS SHALL BE 6 INCHES.

CREATED 02/24/03
REVISED

SEWER LATERAL CONNECTION

PROVI□E□ FOR I□FORM□□IO□□L P□RPO□E□ O□L□□ □O MO□IFI□□□IO□□ WI□□O□□ WRI□□E□ P□□ □PPROV□L

PASCO COUNTY UTILITIES — DETAIL 41

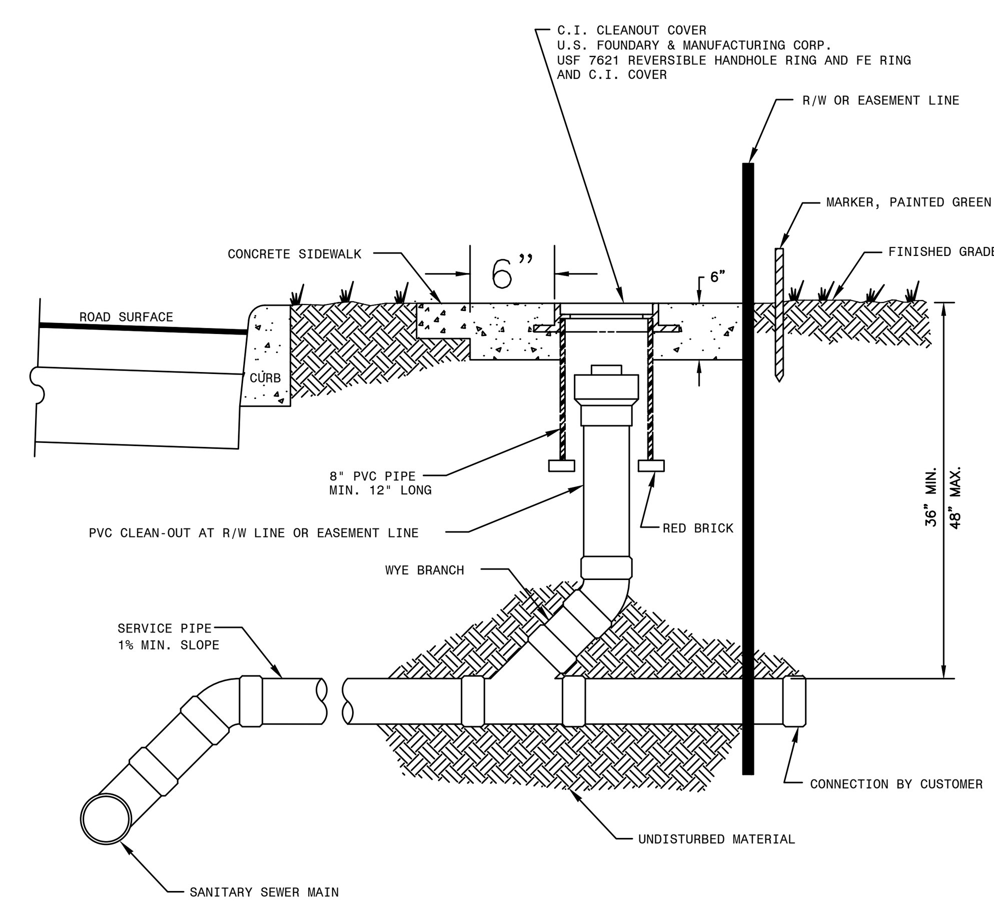

NTS

CREATED 02/24/03
REVISED

SANITARY SEWER - SINGLE WYE CONNECTION AND TYPICAL CLEAN-OUT

PROVI□E□ FOR I□FORM□□IO□□L P□RPO□E□ O□L□□ □O MO□IFI□□□IO□□ WI□□O□□ WRI□□E□ P□□ □PPROV□L

PASCO COUNTY UTILITIES — DETAIL 42

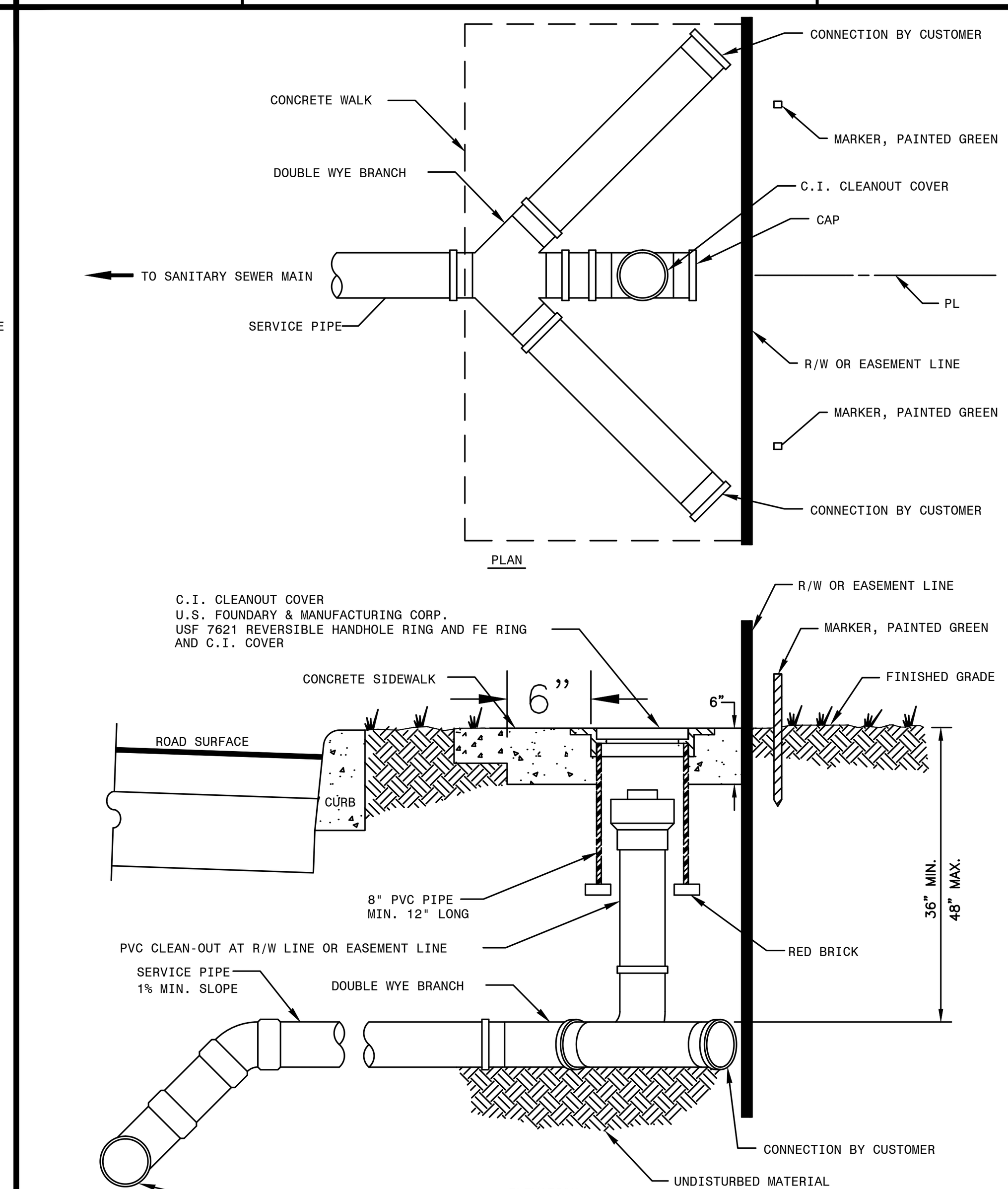

NTS

CREATED 02/24/03
REVISED

SANITARY SEWER - DOUBLE WYE CONNECTION AND TYPICAL CLEAN-OUT

PROVI□E□ FOR I□FORM□□IO□□L P□RPO□E□ O□L□□ □O MO□IFI□□□IO□□ WI□□O□□ WRI□□E□ P□□ □PPROV□L

PASCO COUNTY UTILITIES — DETAIL 43

DATE	DESCRIPTION	BY
	REVISIONS	

CLEARVIEW LAND DESIGN, P.L.
Engineering Business C.A. No.: 28858
1213 E. 6th Avenue, Tampa, Florida 33605
Office: 813-223-3919 Fax: 813-223-3975

DATE:
JORDAN A. SCHRADER P.E. NO. 74798
FLORIDA PROFESSIONAL ENGINEER

SANITARY SEWER SYSTEM DETAILS

JOB NO. NLC-BX-015
DESIGN SMIRCH
DRAWN FINNEY
DATE 08/28/2014
FILE SD

BEXLEY BOULEVARD 1ST EXTENSION

PREPARED FOR: NNP-BEXLEY, LLC

Elevations based on North American Vertical Datum 1988 (NAVD 88)
Conversion from NAVD 88 to NGVD 29 = +0.83 Feet

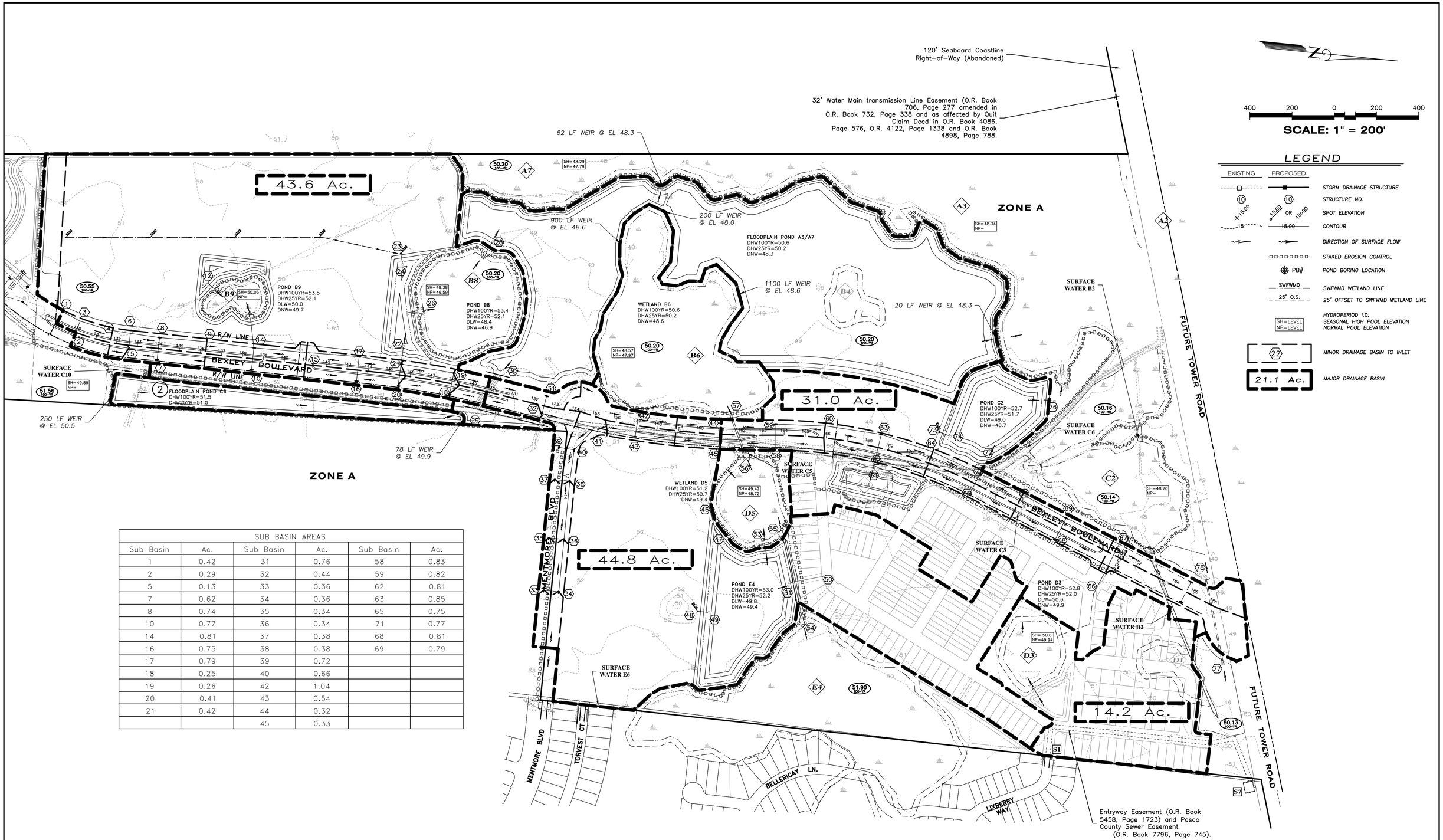

SUB BASIN AREAS					
Sub Basin	Ac.	Sub Basin	Ac.	Sub Basin	Ac.
1	0.42	31	0.76	58	0.83
2	0.29	32	0.44	59	0.82
5	0.13	33	0.36	62	0.81
7	0.62	34	0.36	63	0.85
8	0.74	35	0.34	65	0.75
10	0.77	36	0.34	71	0.77
14	0.81	37	0.38	68	0.81
16	0.75	38	0.38	69	0.79
17	0.79	39	0.72		
18	0.25	40	0.66		
19	0.26	42	1.04		
20	0.41	43	0.54		
21	0.42	44	0.32		
		45	0.33		

400 200 0 200 400

SCALE: 1" = 200'

LEGEND

EXISTING	PROPOSED	
		STORM DRAINAGE STRUCTURE
10	10	STRUCTURE NO.
+ 15.00	15.00 OR 15.00	SPOT ELEVATION
15	15.00	CONTOUR
		DIRECTION OF SURFACE FLOW
		STAKED EROSION CONTROL
PB#		POND BORING LOCATION
SWFWMD		SWFWMD WETLAND LINE
25' O.S.		25' OFFSET TO SWFWMD WETLAND LINE
SH=LEVEL NP=LEVEL		HYDROPERIOD I.D. SEASONAL HIGH POOL ELEVATION NORMAL POOL ELEVATION
22		MINOR DRAINAGE BASIN TO INLET
21.1 Ac.		MAJOR DRAINAGE BASIN

DATE	DESCRIPTION	BY
REVISIONS		

CLEARVIEW LAND DESIGN, P.L.
Engineering Business C.A. No.: 28858
1213 E. 6th Avenue, Tampa, Florida 33605
Office: 813-223-3919 Fax: 813-223-3975

DATE:
JORDAN A. SCHRADER P.E. NO. 74798
FLORIDA PROFESSIONAL ENGINEER

DRAINAGE AREA MAP

JOB NO. NLC-BX-015
DESIGN SMIRCH
DRAWN FERREIRA
DATE 08/28/2014
FILE DRA

BEXLEY BOULEVARD 1ST EXTENSION

PREPARED FOR: **NNP-BEXLEY, LLC**

Elevations based on North American Vertical Datum 1988 (NAVD 88) Conversion from NAVD 88 to NGVD 29 = +0.83 Feet

SHEET 45 OF 46 SHEETS

STORM WATER POLLUTION PREVENTION PLAN

Contained on these plans and within the following notes is a Storm Water Pollution Prevention Plan (SWPPP) which has been developed by Clearview Land Design in accordance with the Florida Department of Environmental Protection's (FDEP) "National Pollutant Discharge Elimination System" (NPDES) Generic Permit for Stormwater Discharge from Large and Small Construction Activities.

The following entities are identified as team members of "SWPPP": Clearview Land Design, the Developer as identified in the title box of these plans, and the site contractor and his sub-contractors. Each team member has specific responsibilities and obligations. In general, all team members, with regard to their involvement and responsibilities on the project, are to implement all necessary storm water management controls to assure compliance with the NPDES Generic Permit for Storm Water Discharges from Construction Activities, the Southwest Florida Water Management District Permit, the applicable local governing agency (i.e. Hillsborough County, Pasco County, etc.) and the guidelines listed in the SWPPP. The duties and responsibilities of the team members as they pertain to the SWPPP are as follows:

Clearview Land Design, P.L.

A. Develop SWPPP including, but not limited to, retention/detention ponds, control structures, erosion control methods and locations and stabilization criteria. This design is included within these construction plans and the following notes and instructions.

B. Submit and obtain the necessary design related storm water permits from the Florida Department of Environmental Protection, the Southwest Florida Water Management District and other applicable governmental bodies.

C. Upon notification by the developer of his intent to commence construction, submit a Notice of Intent to the FDEP on behalf of the developer and copy the contractor including SWPPP certification and copy of the permit.

D. Submit to SWFWMD and the operator of the municipal separate storm water system, if applicable, a letter of construction commencement.

E. Complete and submit a Notice of Termination and certification for developer. The NOT's shall be submitted no more than 30 days after
(a) completion of the project and final stabilization of the site or
(b) when responsibility for the site has ended. Final stabilization as defined by EPA is when all soil disturbing activities at the site have been completed and a uniform (e.g. evenly distributed, without large bare areas) perennial vegetative cover with a density of 70% of the native background vegetative cover for the area has been established on all unpaved areas and areas not covered by permanent structures. As an alternative, equivalent permanent stabilization measures (such as riprap, gabions, or geotextiles) may be employed. The client shall notify Clearview Land Design when one of these criteria has been met.

Contractor

A. Sign and return to Clearview a Contractors Certification Form certifying your understanding of and willingness to comply with the Storm Water Pollution Prevention Plan no later than 48 hours prior to commencement of construction. Also, each subcontractor affected by the SWPPP must certify to the contractor that they understand and shall comply with the NPDES permit and SWPPP. A record of these certifications shall be maintained by the contractor on site.

B. During construction, assure compliance with the designed Storm Water Pollution Prevention Plans prepared by Clearview Land Design and the NPDES Generic Permit for Storm Water Discharges from Large and Small Construction Activities.

C. Maintain a copy of the construction plans, which include the Storm Water Pollution Prevention Plan, the NOI, and all inspection reports and certifications on site.

D. Undertake all reasonable Best Management Practices (BMP's) to assure that silted or otherwise polluted storm water is not allowed to discharge from the site during all phases of construction. Stabilization BMP's that may be used include: temporary or permanent seeding, mulching, geotextiles, sodding, vegetative buffer strips, protection of trees and preservation of mature vegetation. Structural erosion and sediment control BMP's that may be used include: straw bale dikes, silt fences, earth dikes, brush barriers, drainage swales, check dams, subsurface drain, pipe slope drain, level spreaders, storm drain inlet protection, outlet protection, sediment traps, and temporary sediment basins. Detention ponds may also be used as temporary sediment basins. Additional BMP's that may need to be implemented include: providing protected storage areas for chemicals, paints, solvents, fertilizers, and other potentially toxic materials. Providing waste receptacles at convenient locations and providing regular collection of wastes, including building material wastes. Minimizing off-site tracking of sediments. Making adequate preparations, including training and equipment to contain spills of oil and hazardous materials. Complying with applicable state or local waste disposal, sanitary sewer or septic system regulations and the use of appropriate pollution prevention measures for allowable non-storm water components of discharge.

E. Notify Clearview Land Design and the developer in writing of any non-storm water pollution sources which are being stored, or otherwise used during the construction of the project, i.e., fertilizers, fuels, pesticides, other chemicals. This notification should be accompanied with the contractor's design and methods to prevent pollution run-off from these sources.

F. Develop a maintenance and inspection plan which includes, but is not limited to the following:

A. The specific areas to be inspected and maintained that includes all the disturbed areas and material storage areas of the site.

B. The erosion and sediment controls identified in the SWPPP to be maintained and inspected and those additional controls that the contractor deems necessary.

C. Maintenance procedures.

D. The procedure to follow if additional work is required or whom to call.

E. Inspections and maintenance forms.

F. The personnel assigned to each task.

The following shall be inspected a minimum of once a week or within 24 hours after 0.50 inches of rainfall:

- *Stabilization measures (once a month if fully stabilized).*
- *Structural controls.*
- *Discharge points.*
- *Construction entrances and exits.*
- *Areas used for storage of exposed materials.*

An inspection form shall be completed for each inspection. Any permit violations should be noted and corrective measures shall be taken no later than 7 days after the inspection occurred. If revisions to the SWPPP are needed, a report form for changes in the SWPPP shall be completed and a copy sent to Clearview Land Design, P.L. The original shall be kept on-site as documentation of the change. If the inspection passes, a certification that the facility is in compliance with the SWPPP and the NPDES permit must be signed by a duly authorized representative of the principal executive official of the operator of the SWPPP with one of the following qualifications:

1. *Has successfully completed the Florida Stormwater, Erosion and Sediment Control Inspector Training Program.*
2. *Successfully completed a similar training program.*
3. *Has enough practical on the job training to be qualified to perform the inspections.*

Retain inspection reports and certifications for at least three years.

G. Site stabilization measures shall be initiated as soon as practical but in no case more than 7 days, in portions of the site where construction activities have temporarily or permanently ceased.

H. Releases in Excess of Reportable Quantities.

1. *The discharge of hazardous substances or oil in the stormwater discharge(s) from a facility or activity shall be prevented or minimized in accordance with the applicable stormwater pollution prevention plan for the facility or activity. This permit does not relieve the operator of the reporting requirements of 40 CFR part 117 and 40 CFR part 302. Where a release containing a hazardous substance in an amount equal to or in excess of a reporting quantity established under either 40 CFR 117 or 40 CFR 302, occurs during a 24 hour period:*
   - *a. The operator is required to notify the State Warning Point (800-210-0519 or 850-413-9911) as soon as he or she has knowledge of the discharge;*
   - *b. The operator shall submit within 14 calendar days of knowledge of the release a written description of: the release (including the type and estimate of the amount of material released), the date that such release occurred, the circumstances leading to the release, and remedial steps to be taken, to the Florida Department of Environmental Protection, NPDES Stormwater Section, Mail Station 2500, 2600 Blair Stone Road, Tallahassee, Florida 32399-2400; and*
   - *c. The stormwater pollution prevention plan required under Part V of this permit must be modified within 14 calendar days of knowledge of the release to provide a description of the release, the circumstances leading to the release, and the date of the release. In addition, the plan must be reviewed to identify measures to prevent the reoccurrence of such releases and to respond to such releases, and the plan must be modified where appropriate.*
2. *This permit does not authorize the discharge of hazardous substances or oil resulting from an on-site spill.*

Developer

A. Notify Clearview of your intent to commence construction. Sign the Notice of Intent form as operator of the storm water discharge facility and permittee and return to Clearview Land Design, P.L.

B. Sign a Certification of Storm Water Pollution Prevention Plan and return to Clearview Land Design, P.L.

C. Notify Clearview when it is time to submit a Notice of Termination as defined under Part E of the Clearview Land Design section of the SWPPP. Sign and return to Clearview Land Design, P.L. for submittal to FDEP a Notice of Termination form and certification.

PRE-DEVELOPED SITE INFORMATION:

1. *Total site acreage:* 297.8 Ac.± *(TOTAL NNP-BEXLEY, LLC OWNERSHIP FROM SR 54 TO TOWER ROAD)*
2. *Land use:* VACANT PASTURE
3. *Vegetation:* PASTURE, WETLANDS
4. *Receiving waters or municipal separate storm water system:* SANDY BRANCH/ ANCLOTE RIVER
5. *2 Year/24 Hour rainfall depth:* 4.5"
6. *Soil types:* PINEDA, MYAKKA, SELLERS, EAUGALLIE FINE SANDS

PROJECT INFORMATION:

1. *Project type: Residential*
2. *Anticipated construction sequence is as follows:*
   1. *Complete erosion control installation*
   2. *Clearing and grubbing*
   3. *Earthwork activities*
   4. *Storm water system construction*
   5. *Utility construction*
   6. *Base and pavement construction*
   7. *Final stabilization*

   The BMP's listed in Part D of the Contractor section of the SWPPP shall be considered during all phases of construction.
3. *Anticipated start date:* 3/15/2015
4. *Anticipated completion date:* 3/15/2020
5. *Total acres disturbed:* 204.0 Ac. ± *(SILT FENCE LIMITS)*
6. *Pre-developed "C" factor:* 0.20
7. *Post-developed "C" factor:* 0.45
8. *The storm water management system, upon completion of construction and appropriate certification and as-built submittals will be operated and maintained by* CDD *(UNLESS OTHERWISE NOTED)*
9. *The potential source of pollution from this project is on-site development and construction activity.*

OWNER'S INSTRUCTIONS FOR MAINTENANCE AND INSPECTION OF STORMWATER FACILITIES

The entire stormwater system should be inspected on at least a semi-annual basis. This should include a visual inspection of the pond, pond banks, bleed-down orifices, other control structures, and discharge pipes. These should be kept free of debris and cleaned on a frequency as required to keep them functional, as designed. Mowing/clearing around the structures may be required to prevent vegetation from clogging them.

Wetland plants, if intentionally installed, should be monitored and maintained as required on the approved construction plans. Areas of littoral shelving, which are required to be vegetated but not intentionally planted, should not be cleared of the wetland plants. These areas should have as high a plant coverage as possible, for maximum water filtration.

Sediment sumps, if designed and installed, should have sediment removed as necessary to allow them to efficiently remove suspended particles. They should be re-dug to the original design specifications, if silted in.

For percolation treatment ponds/swales, the owner of the facility shall inspect the pond bottom periodically after heavy rainfall events to check for persistent ponding or pooling of water. All large debris shall be removed and disposed of elsewhere. If prolonged ponding persists, i.e., in excess of 72 hours, the owner shall rake or scarify the surface. If required, the soil in the area of ponding shall be removed and replaced with clean sandy, non-cohesive soils.

Please check the construction plans to see if written reports on monitoring or plant survival rates are required to be sent to any reviewing agencies. Written notes should always be kept which describe maintenance activities undertaken during each inspection.

Specific conditions of all permits may require additional maintenance activities above and beyond those outlined above. Please be aware of all permit conditions as issued by regulatory agencies to ensure permit compliance.

NOTE: CONTRACTOR SHALL INSPECT EROSION CONTROL DAILY (INCLUDING BUT NOT LIMITED TO TYPICAL OUTFALLS TO OFWs). CORRECTIVE ACTION SHALL BE TAKEN IMMEDIATELY TO REPAIR OR REPLACE AS NEEDED.

GENERAL EROSION AND TURBIDITY CONTROL NOTES

1. *The Site Subcontractor shall be responsible for installation and maintenance of all erosion and turbidity controls and the quality and quantity of offsite or wetland discharges.*
2. *Prior to construction, the Site Subcontractor is responsible for having his dewatering plan and turbidity control plan approved by the applicable reviewing agencies. Refer to the project's permit approvals and permit conditions for agencies requiring such review and approval. Questions concerning appropriate techniques should be addressed to those agencies and/or discussed with the project engineer and owner.*
3. *The appropriate turbidity and erosion control methodologies selected by the Site Subcontractor for this project should be made following assessment of the plans and project site specific factors and after consultations as needed with the project engineer and appropriate agencies. The Site Subcontractor will be responsible for obtaining any and all necessary permits for such activity; several factors to consider are listed below:*
   - *A. Clay content in excavated materials and/or permeabilities rates*
   - *B. Depth of cut in ponds, trenches, or utility lines*
   - *C. Ambient ground water levels*
   - *D. Actual rainfall amounts and time of year relative to normal rainy season*
   - *E. Proximity to wetlands, water bodies or offsite properties*
   - *F. 'Class' designation of receiving water bodies (i.e., Outstanding Florida Waters, shellfish harvesting areas, etc.)*
   - *G. Density, type, and proximity of upland vegetation to be retained during construction (for use as possible filtration areas)*
   - *H. Fill height relative to natural grade and length and steepness of the proposed slopes*
   - *I. Existing topography and directions of surface flow*
   - *J. Type of equipment used*
   - *K. Project type*
   - *L. Duration of construction activities*
   - *M. Separation distance of onsite ponds*
   - *N. Ambient quality of surface and groundwater*
   - *O. Temporary stockpile locations and heights*
4. *At the onset of construction, the Site Subcontractor, as the party responsible for implementation of the erosion and sediment control plan, shall assess the above described conditions and factors with respect to relative cost effectiveness and select the appropriate methods of protection. A fairly extensive list of techniques are presented below but it must be stressed that any or all of the following may be necessary to maintain water quality and quantity standards. The construction sequencing should be thought out in advance of initiation to provide adequate protection of water quality.*
5. *Discharges which exceed 29 N.T.U.'s over the background levels are in violation of state water quality standards. Discharges of water quantities which affect offsite properties or may damage wetlands are also prohibited by regulating agencies.*
6. *The erosion and turbidity control measures shown hereon are the minimum required for agency approval. Additional control and measures may be required due to the Site Subcontractor's construction sequence & unforeseen weather conditions. Any additional measures deemed necessary by the Site Subcontractor shall be included in the lump sum bid with no extras for materials and labor allowed.*
7. *Hay bales or silt screens shall be installed prior to land clearing to protect water quality and to identify areas to be protected from clearing activities and maintained for the duration of the project until all soil is stabilized.*
8. *Floating turbidity barriers shall be in place in flowing systems or in open water lake edges prior to initiation of earthwork and maintained for the duration of the project until all soil is stabilized.*
9. *No clay material shall be left exposed in any stormwater storage facility. If clay or sandy-clays are encountered during stormwater storage excavation, the Site Subcontractor shall notify the Engineer immediately before proceeding with further excavation. If the Engineer of Record has determined that such soils are non-confining and must be excavated to meet permit and design conditions, excavation may proceed after obtaining written authorization from the appropriate governing agency. If said soils are left exposed at the permitted and designed depth, the Site Subcontractor shall over-excavate the pond's bottom and side slopes by a minimum of twelve (12") inches and backfill with clean sands to help prevent suspension of fine particles in the water column.*
10. *The installation of temporary erosion control barriers shall be coordinated with the construction of the permanent erosion control features to the extent necessary to assure effective and continuous control of erosion and water pollution throughout the life of the construction phase.*
11. *The type of erosion control barriers used shall be governed by the nature of the construction operation and soil type that will be exposed. Silty and clayey material may require solid sediment barriers to prevent turbid water discharge, while sandy material may need only silt screens or hay bales to prevent erosion. Floating turbidity curtains should generally be used in open water situations. Diversion ditches or swales may be required to prevent turbid stormwater runoff from being discharged to wetlands or other water bodies. It may be necessary to employ a combination of barriers, ditches, and other erosion/turbidity control measures if conditions warrant.*
12. *Where pumps are to be used to remove turbid waters from construction areas, the water shall be treated prior to discharge to the wetlands. Treatment methods include, for example, turbid water being pumped into grassed swales or appropriate upland vegetated areas (other than upland preservation areas and wetland buffers), sediment basins, or confined by an appropriate enclosure such as turbidity barriers or low berms, and kept confined until turbidity levels meet State Water Quality Standards.*
13. *The Permittee shall schedule his operations such that the area of unprotected erodible earth exposed at any one time is not larger than the minimum area necessary for efficient construction operation, and the duration of exposed, uncompleted construction to the elements shall be as short as practicable. Clearing and grubbing shall be so scheduled and performed such that grading operations can follow immediately thereafter. Grading operations shall be so scheduled and performed that permanent erosion control features can follow immediately thereafter if conditions on the project permit.*
14. *Water derived from various dewatering methods should be passed through sufficiently wide areas of existing upland vegetation to filter out excess turbidity. If this is not sufficient, the water shall be retained in previously constructed permanent stormwater ponds or else retained in temporary sedimentation basins until the clarity is suitable to allow for its discharge. Plugging the outfalls from completed stormwater ponds may be needed to avoid discharge. However, such situations should be monitored closely to preclude berm failure if water levels rise too high.*
15. *Water can be transported around the site by the use of internal swales or by pumps and pipes.*
16. *Sheet flow of newly filled or scraped areas may be controlled or contained by the use of brush barriers, diversion swales, interceptor ditches or low berms. Flow should be directed toward areas where sediments can sufficiently settle out.*
17. *Exposed soils shall be stabilized as soon as possible, especially slopes leading to wetlands. Stabilization methods include solid sod, seeding and mulching or hydromulching to provide a temporary or permanent grass cover mulch blankets, filter fabrics, etc., can be employed to provide vegetative cover.*
18. *Energy dissipaters (such as rip rap, a gravel bed, hay bales, etc.) shall be installed at the discharge point of pipes or swales if scouring is observed.*
19. *Attempt to install roadway curb and gutters as soon as possible to reduce the surface area for erosion to occur.*
20. *Implement storm drain inlet protection (hay bales or gravel) to limit sedimentation within the stormwater system. Perform inspections and periodic cleaning of sediments which wash out into the streets until all soil is stabilized.*
21. *Water discharge velocities from impounded areas and temporary sedimentation basins shall be restricted to avoid scouring in receiving areas.*
22. *If water clarity does not reduce to state standards rapidly enough in holding ponds, it may be possible to use chemical agents such as alum to flocculate or coagulate the sediment particles.*
23. *Hay bales, silt screens, or gravel beds can be added around the pipe or swale discharge points to help clarify discharges. Spreader swales may help dissipate cloudy water prior to contact with wetlands.*
24. *All fuel storage areas or other hazardous storage areas shall conform to accepted state or federal criteria for such containment areas.*
25. *Vehicle or equipment washdown areas will be sufficiently removed from wetlands or offsite areas.*
26. *Fugitive dust controls (primarily by using water spray trucks) shall be employed as needed to control windborn emissions.*
27. *If the above controls remain ineffective in precluding release of turbid water, especially during pond or utility line dewatering, then the contractor may be compelled to use a vertical dewatering system such as well points or sock drains to withdraw groundwater which may already be clear enough to allow for direct discharge to wetlands.*
28. *Ongoing inspections and periodic maintenance by the Site Subcontractor shall occur daily (at a minimum) to insure the above methods are working suitably. Corrective action must be taken immediately to repair or replace any damaged BMP's to ensure the above methods are working properly.*
29. *Site Subcontractors are required to obtain and thoroughly review The Florida Development Manual: A Guide to Sound Land and Water Management, which was developed by the State of Florida Department of Environmental Protection in 1988. This provides fairly in-depth discussions of recommended techniques and also provides specific design and technical standards. A copy of this document is available for review at Clearview Land Design, P.L.*

CSWMP SEQUENCING NOTES

CSWMP PHASE 1 – PERIMETER CONTROLS

1. *Install silt fence(s) pertinent to the current limits of construction. Clear only those areas necessary to install silt fence(s).*
2. *Prepare temporary parking and storage area.*
3. *Stop all activities and contact the Civil Engineer and Agency Representatives to perform an inspection.*

CSWMP PHASE 2 – SITE CONSTRUCTION

4. *Begin clearing and grubbing the site in those areas pertinent to the current limits of construction.*
5. *Begin grading the site in those areas pertinent to the current limits of construction.*
6. *Proceed with site work. Install utilities, underdrains, storm sewers, curb and gutter, etc. pertinent to the limits of construction. Exposed soils shall be stabilized as soon as possible.*
7. *All disturbed areas shall be permanently stabilized. Stabilization methods include solid sod, seeding and mulching or hydromulching to provide a temporary or permanent grass cover. Mulch blankets, filter fabrics, etc., can be employed to provide vegetative cover.*

LEGEND

EXISTING	PROPOSED	
		STORM DRAINAGE STRUCTURE
(10)	(10)	STRUCTURE NO.
+15.00	15.00 OR 15.00	SPOT ELEVATION
15	15.00	CONTOUR
		DIRECTION OF SURFACE FLOW
		STAKED EROSION CONTROL (REPRESENTS THE SWFWMD BUFFER LIMITS WHERE ADJACENT TO A PROTECTED WETLAND)
		FLOATING TURBIDITY BARRIER
	SPT#	SOIL BORING LOCATION
		1992 FEMA FLOOD LINES
A		HYDROPERIOD ID
SH=45.00		SEASONAL HIGH WATER ELEVATION
NP=		NORMAL POOL ELEVATION (IF APPLICABLE)

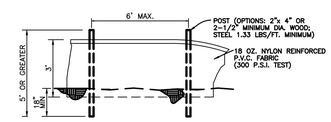

STAKED TURBIDITY BARRIER
N.T.S.

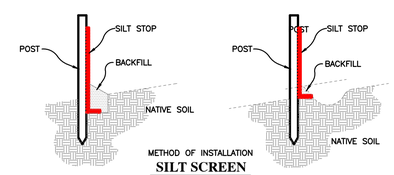

METHOD OF INSTALLATION
SILT SCREEN
N.T.S.

EROSION CONTROL DETAILS

NOTE: THE EROSION BARRIERS, AS SHOWN, ARE NOT TO BE CONSTRUED TO MEAN THAT THEY ARE ALL THAT MAY BE REQUIRED. THE CONTRACTOR IS TO TAKE WHATEVER MEASURES NECESSARY TO CONTROL EROSION THROUGHOUT THE PROJECT.

SILT FENCE IN THE VICINITY OF WETLANDS REPRESENTS THE EDGE OF THE WETLAND BUFFER – NO DISTURBANCE SHALL TAKE PLACE WITHIN THE WETLAND BUFFER

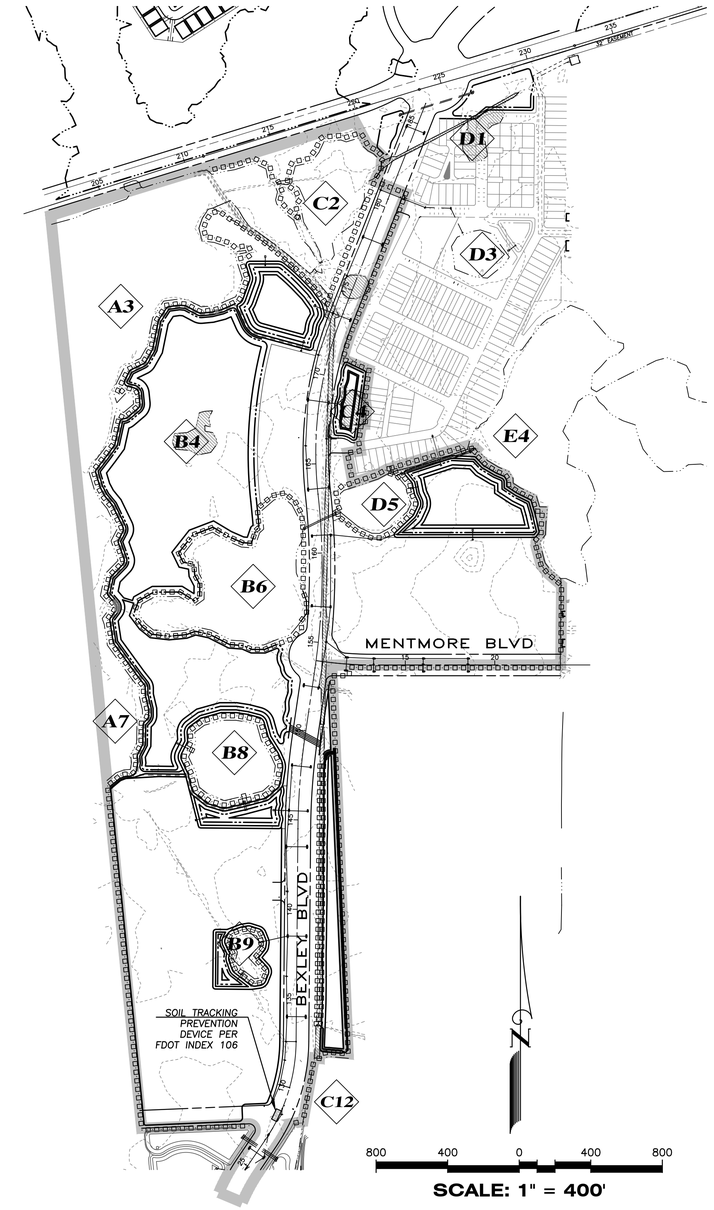

Applicant Name: Thomas J. Panaseny
Vice-President
NNP-Bexley, LLC

Applicant Signature: _____

DATE	DESCRIPTION	BY
	REVISIONS	

CLEARVIEW LAND DESIGN, P.L.
Engineering Business C.A. No.: 28858
1213 E. 6th Avenue, Tampa, Florida 33605
Office: 813-223-3919 Fax: 813-223-3975

DATE:
JORDAN A. SCHRADER P.E. NO. 74798
FLORIDA PROFESSIONAL ENGINEER

SURFACE WATER MANAGEMENT PLAN

JOB NO. NLC-BX-015	BEXLEY BOULEVARD 1ST EXTENSION
DESIGN SMIRCH	
DRAWN FERREIRA	PREPARED FOR: NNP-BEXLEY, LLC
DATE 08/28/2014	Elevations based on North American Vertical Datum 1988 (NAVD 88) Conversion from NAVD 88 to NGVD 29 = +0.83 Feet
FILE CSWMP	SHEET 46 OF 46 SHEETS

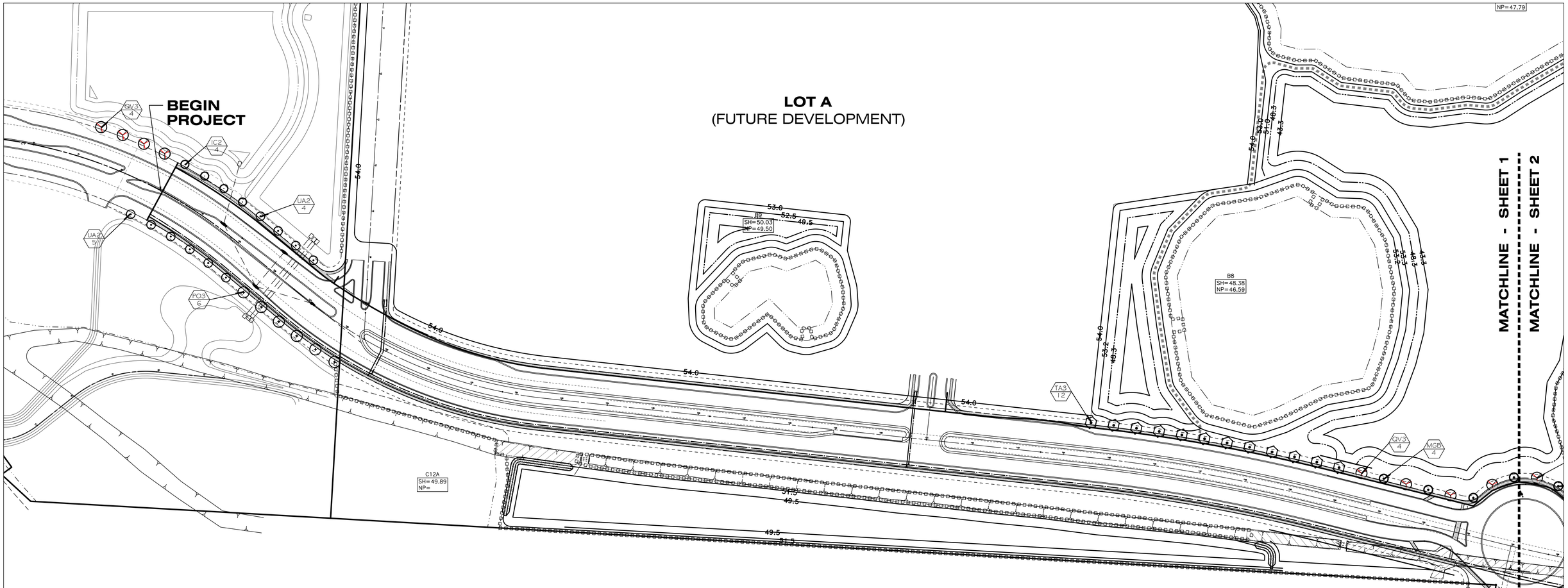

TREE REMOVAL AND REPLACEMENT NOTES

1. A tree removal permit is required for removal of all trees over 5" dbh with certain exceptions as defined in Pasco County LDC 802.3.A.
2. Tree location survey identifying all trees 10" dbh and greater shall be submitted to County for review.
3. Tree survey shall be completed 3 years or less in advance of submittal unless otherwise approved by the Zoning Administrator.
4. In no case, shall tree surveys be completed more than 5 years in advance unless part of a previous submittal. If prepared with a previous approval over more than 5 years, a modified tree survey verifying tree diameter shall be submitted.
5. Efforts shall be made to minimize tree removal. Design shall take into consideration the design of infrastructure and hardscape elements and the vigor of the existing trees.
6. Trees equal to 10" dbh and greater are required to be replaced in accordance with Pasco County LDC, Section 802.3.C.
7. For all live oaks which require replacement, the total caliper inches of replacement trees shall equal the total caliper inches of the live oaks removed, rounded to the nearest whole number.
8. For all other trees which require replacement, the total caliper inches of replacement trees shall equal the total caliper inches of the live oaks removed, rounded to the nearest whole number.
9. Pruning or trimming of trees to remain on site shall be in accordance with ANSI 300A, 2001 as amended.
10. Credit for replacement will be given for trees planted in addition to the required trees by code.
11. If tree replacement requirements cannot be met on site, the County Administrator may approve a monetary contribution to the Tree Mitigation Fund at the rate established by the resolution of the BOC.
12. Invasive or exotic species located within a project area shall be removed.
13. Prior to clearing and grubbing, and removal of any tree, preserved areas shall be clearly marked with 3" ht. min. barriers to create a protected zone during construction. The barrier shall encompass the tree's dripline.
14. Where needed to protect preserved trees from erosion, silt barriers, hay bales or other erosion control shall be required.
15. No storage, movement, or cleaning of equipment, material or debris shall be placed within the protected zone.
16. No excavation shall occur within protected zone.
17. No fire burning shall be allowed within 30' of the protected zone.
18. When tunneling or trenching for utilities is allowed in protected zones, it shall be done in accordance with the "Tree and Protection for Builders and Developers, as amended and published by the Florida Department of Agriculture and Consumer Services. Trenching shall occur no closer to the tree's trunk than 2/3 of the drip line radius.

PERMIT LANDSCAPE NOTES

1. This Landscape Plan is for permitting purposes only. Additional trees, shrubs, groundcovers, and landscape materials may be added for aesthetic or environmental benefits. Additional landscape shall comply with Pasco County requirements and standards.
2. No reference to engineering or survey shall be made from this Landscape Plan.
3. Landscape shall be maintained by entity other than Pasco County. NMP Bexley LLC (or its successors) will be responsible for maintenance. All required landscape shall be maintained in a healthy condition in perpetuity in accordance with Pasco County LDC. Owner responsible for ongoing maintenance to prevent the establishment of prohibited exotic species.
4. Landscape shall employ sustainable principles and practices which include Florida Friendly landscape and utilize low maintenance plant species. Plan shall meet The "Right Plant / Right Place" concept. This includes grouping plants together based on water, soil, climate and light requirements.
5. All plants shall be Florida Grade No. 1 or better as defined by the Department of Agriculture, Grades and Standards for Nursery Plants.
6. A maximum 50% of the plant materials, other than trees shall be non-drought tolerant plants.
7. A minimum 30% of the plant materials, other than trees and turf grass shall be native Floridian species, as defined in the most current Appendix A of Pasco County LDC.
8. Plants shall be grouped together based on water, soil, and light requirements.
9. All landscape shall be installed in accordance with Florida chapter, International Society of Arboriculture Standards for Planting and Florida Nursery Growers and Landscape Association.
10. No plants from the most current Appendix B and/or Appendix C of Pasco County LDC shall be planted on the project site.
11. Shade trees utilized to meet requirements of the code shall have a mature spread of 20' and at time of planting have a min. 2" cal. and min. 6' ht.
12. Multi-trunk trees shall be 6' ht. min., have 3 trunks min. with 1" min. cal. per trunk.
13. Where overhead utilities exist, understory trees shall be planted with a spacing of 30' o.c. Trees that exceed 25' ht. at maturity shall be planted no closer than 20' to the overhead utility.
14. Palm trees may be substituted at a 3:1 ratio, to meet no more than 30% of required shade trees. Phoenix species, excluding Roebellini, may be planted to count for one tree. Palms to meet shade tree requirements shall be 10' c.t. min. and planted in groups.
15. Required shrubs shall be 18" ht. min. at time of planting. Shrubs shall obtain 24" ht. within 1 year of planting to form a continuous appearance. Shrubs shall be spaced 36"o.c. max.
16. Dwarf varieties of shrubs used to meet code requirements shall be 14" ht. min. at time of planting and spaced 36" o.c. max.
17. Groundcovers shall be spaced to provide complete coverage within 1 year of planting.
18. Planting beds shall be covered with 3" layer of mulch type specified in planting list. Mulch depth shall be measured after compaction. Mulch shall be free of litter, rocks, sticks, and other debris. No more than 20% of mulched areas may be stone or gravel. Remove mulch from canopies of shrubs and properly tuck in mulch along edges.
19. A 3' min. diameter ring shall be applied around all existing trees that do not fall within a mulched planting bed and/or are surrounded by turf. Mulch rings shall be sized appropriately for size of tree. Where sodded between planting beds or mulch rings, maintain 3' minimum sod strip. Where 3' between mulch areas is unobtainable, fill in area with mulch. Mulch shall not be placed directly against the plant stem or tree trunk.
20. Beds shall be kept free of disease, pests, weeds, and other debris.
21. Groundcovers and shrubs shall be planted with triangular spacing for optimum growth and fill in of planting bed.
22. Any required plant material that is removed or dies shall be replaced within 30 days.
23. All trees shall be guaranteed for a period of one year from the date of acceptance.
24. Trees used for Tree Replacement shall be in accordance with Pasco County LDC 602.7: All trees used to meet the requirements of tree replacement shall be equal to or greater than two (2) inches in caliper. Multi-trunked trees shall be equal to or greater than three (3) inches in caliper, with a minimum of 3 trunks.
25. To provide diversity, trees required shall be provided according to the chart below. Even distribution shall be strived for.

Required Trees	Required Species
1-5	1
6-10	2
11-15	3
16-20	4
21-25	5
26-30	6
31-35	7
35+	8

26. Trees and other landscape material shall be planted in such a manner as not to impede the storm-water run off to or in a ditch, swale or pond and away from the pipes, underdrains and sidewalk without obstructing the maintenance access to the stormwater facility.
27. Landscape shall be placed to avoid conflict with existing or proposed overhead and underground utilities.
28. Trees shall not be planted within any easement so as to interfere with the use of that easement, nor under existing or planned overhead utilities, nor in rights-of-way without County approval through the associated review process.
29. All portions of a lot upon which development has commenced but not continued for a period of 30 days shall be planted with a grass species or ground cover to prevent erosion and encourage soil stabilization. Adequate coverage shall be achieved within 45 days.
30. All necessary permits for the work, prior to commencement of operations on-site shall be obtained.
31. All work within the right-of-way areas shall require a R.O.W. use permit and conform to the standards and specifications of all applicable local and/or state highway jurisdictions.
32. All utility locations, existing and proposed shall be located prior to commencement of work. Field adjustments may be made as necessary to avoid utility conflicts.

SIGHT VISIBILITY NOTES

1. Sight visibility triangles shall be maintained as shown per FDOT Index 546, Passenger Car.
2. All plant material, including sod, groundcovers, shrubs and trees shall be maintained to keep clear sight areas free from obstructions at all times. Maintain minimum and maximum plant heights and clear areas per Sight Window Detail, as shown in most recent FDOT Index 546.

PERMIT IRRIGATION NOTES

1. An underground irrigation system shall be installed in compliance with Pasco County Land Development Code and meet the Irrigation Ordinance.
2. 50% maximum of on-site green space shall utilize irrigation techniques other than micro-irrigation when a conventional system is used.
3. Irrigation system shall be zoned according to plant moisture requirements. Sod shall be separately zoned from any zone that irrigates trees, shrubs, and/or groundcovers.
4. Reclaim Water to be used when available for irrigation. Common areas to be irrigated by SOURCE.
5. Irrigation system shall be designed to avoid overspray, runoff, or flow onto non-irrigated areas.
6. Automatic controller shall be used to program irrigation cycles.
7. Rain sensor device shall be incorporated into irrigation system and be placed where it will be unobstructed to rainfall.
8. Irrigation system shall be maintained to ensure efficient water use.
9. Irrigation system shall be checked and properly working for a min. of 24 hours prior to planting.

PASCO COUNTY LANDSCAPE CODE REQUIREMENT REFERENCE

1. LDC 905.2.D.6 Water Management Systems
2. All manmade dry and wet retention areas visible from right-of-way or located within a required buffer shall include trees at a rate of 1 tree per 50 linear feet of retention pond bank.
3. Retention / detention ponds and swales shall be permitted within a required buffer provided they meet the following:
4. Ponds or swales shall not exceed, at any location within the required buffer, 70% of the required buffer width. A minimum 5' wide level planting area shall be maintained between the pond or swale and the public right-of-way or adjacent parcel.
5. Required vegetation shall be chosen and placed such that the functionality of the stormwater design is not impeded.
6. To reduce soil erosion and visually soften the edge of the water management areas, trees shall be planted along the banks at a rate of 1 tree per 50 linear feet of pond bank.
7. The banks of dry retention areas shall be sodded to the pond bottom. Wet areas shall be sodded to the seasonal high water line. Bahia grass may be used or planted in retention/detention areas, drainage areas, and wetland setback and mitigation areas.

PLANT SCHEDULE

TREES	CODE	QTY	BOTANICAL NAME	COMMON NAME	CONT	CAL	SIZE	DROUGHT		REMARKS
	AR3	9	Acer rubrum	Red Maple	45 gal	3"Cal	12-14' HT x 5-6' SPR	Native		Single straight central leader. Even branching distributed throughout canopy. Dense foliage. 5' ct.
	IC2	4	Ilex cassine	Dahoon Holly	45 gal	3"Cal	8-10' HT x 3-4' SPR	Native		Single, straight trunk. Even branching and dense canopy distributed throughout. Full to ground to 2' max. ct.
	JS3	6	Juniperus silicicola	Southern Red Cedar	FG	3"Cal	10-12' HT x 4-5' SPR	Native		Straight trunk with symmetrical head. Full to ground. Dense canopy with no gaps.
	MGB	5	Magnolia grandiflora 'Brackens Brown Beauty'	Bracken's Southern Magnolia	G5 gal	3"Cal	10-12' HT x 4-5' SPR	Native		Straight trunk with symmetrical head. Full to ground. Dense canopy with no gaps.
	PO3	6	Platanus occidentalis	American Sycamore	FG	3"Cal	16-18' HT x 8-10' SPR	Native		Single, straight central leader. Full canopy with even branching distributed throughout the height and circumference of tree. 5' CT.
	QV3	9	Quercus virginiana	Southern Live Oak	G5 gal	3"Cal	14-16' HT x 6-8' SPR	Native		Single, straight central leader. Even branching distributed throughout canopy. Well-spaced limbs around entire circumference of tree.
	TA3	12	Taxodium ascendens	Pond Cypress	45 gal	3"Cal	12-14' HT x 5-6' SPR	Native		Single, straight central leader with branching distributed evenly throughout the height and circumference of tree.
	UA2	10	Ulmus alata	Winged Elm	45 gal	3"Cal	10-12' HT x 4-5' SPR	Native		Single, straight central leader. Even branching distributed throughout canopy. Well-spaced limbs around entire circumference of tree.

TREE REMOVAL/REPLACEMENT NOTE:
These plans represent code minimum landscaping. Final detailed landscape plans for Bexley Boulevard will be prepared and submitted under separate cover for review. In addition, future development within Lots A, B & C will include detailed landscape plans. The applicant shall either replace required inches of trees with future detailed landscape plans or pay into the tree mitigation fund. The applicant shall pay either $106,600.00 ($50.00 per inch) or $500.00 per 2,000 s.f. of building, based on the floor area of the building placed on each tract. Final payment will be determined with future site plan and permitting.

TREE REMOVAL TABLE		
	Total Inches	Required Replacement
Live Oaks	1189	1,189"
Laurel Oaks	2384	787"
Red Maples	473	156"
TOTAL EXISTING TREES: 4046 (excludes Slash Pines & trees under 10" caliper)		**TOTAL 2132" OF REPLACEMENT**

200 100 0 100 200

SCALE: 1" = 100'

DATE	DESCRIPTION	BY
	REVISIONS	

CLEARVIEW LAND DESIGN, P.L.
Engineering Business C.A. No.: 28858
1213 E. 6th Avenue, Tampa, Florida 33605
Office: 813-223-3919 Fax: 813-223-3975

DATE:
THOMAS F. DEAL
R.L.A. 0001446

PERMIT ROADWAY LANDSCAPE PLAN

BEXLEY BOULEVARD 1ST EXTENSION

JOB NO.	NLC-BX-015
DESIGN	SMIRCH
DRAWN	SMIRCH
PREPARED FOR:	NNP-BEXLEY, LLC
DATE	08/28/2014
	Elevations based on North American Vertical Datum 1988 (NAVD 88) Conversion from NAVD 88 to NGVD 29 = +0.83 Feet
FILE	STP

SHEET 1 OF 2 SHEETS

MATCHLINE - SHEET 1

MATCHLINE - SHEET 2

B6
SH=48.57
NP=47.97

QV3
1

MGB
1

LOT B
(FUTURE DEVELOPMENT)

AR3
9

JS3
6

D5
SH=49.42
NP=48.72

C2
SH=48.70
NP=

END PROJECT

LOT C
(FUTURE DEVELOPMENT)

BEXLEY SOUTH
PARCEL PHASE 1
(FUTURE DEVELOPMENT)

D3
SH= 50.6
NP=49.94

N

200 100 0 100 200

SCALE: 1" = 100'

DATE	DESCRIPTION	BY
	REVISIONS	

CLEARVIEW LAND DESIGN, P.L.
Engineering Business C.A. No.: 28858
1213 E. 6th Avenue, Tampa, Florida 33605
Office: 813-223-3919 Fax: 813-223-3975

DATE:

THOMAS F. DEAL
R.L.A. 0001446

PERMIT ROADWAY LANDSCAPE PLAN

JOB NO. NLC-BX-015	BEXLEY BOULEVARD 1ST EXTENSION
DESIGN SMIRCH	
DRAWN SMIRCH	PREPARED FOR: NNP-BEXLEY, LLC
DATE 08/28/2014	Elevations based on North American Vertical Datum 1988 (NAVD 88) Conversion from NAVD 88 to NGVD 29 = +0.83 Feet
FILE STP	SHEET 2 OF 2 SHEETS

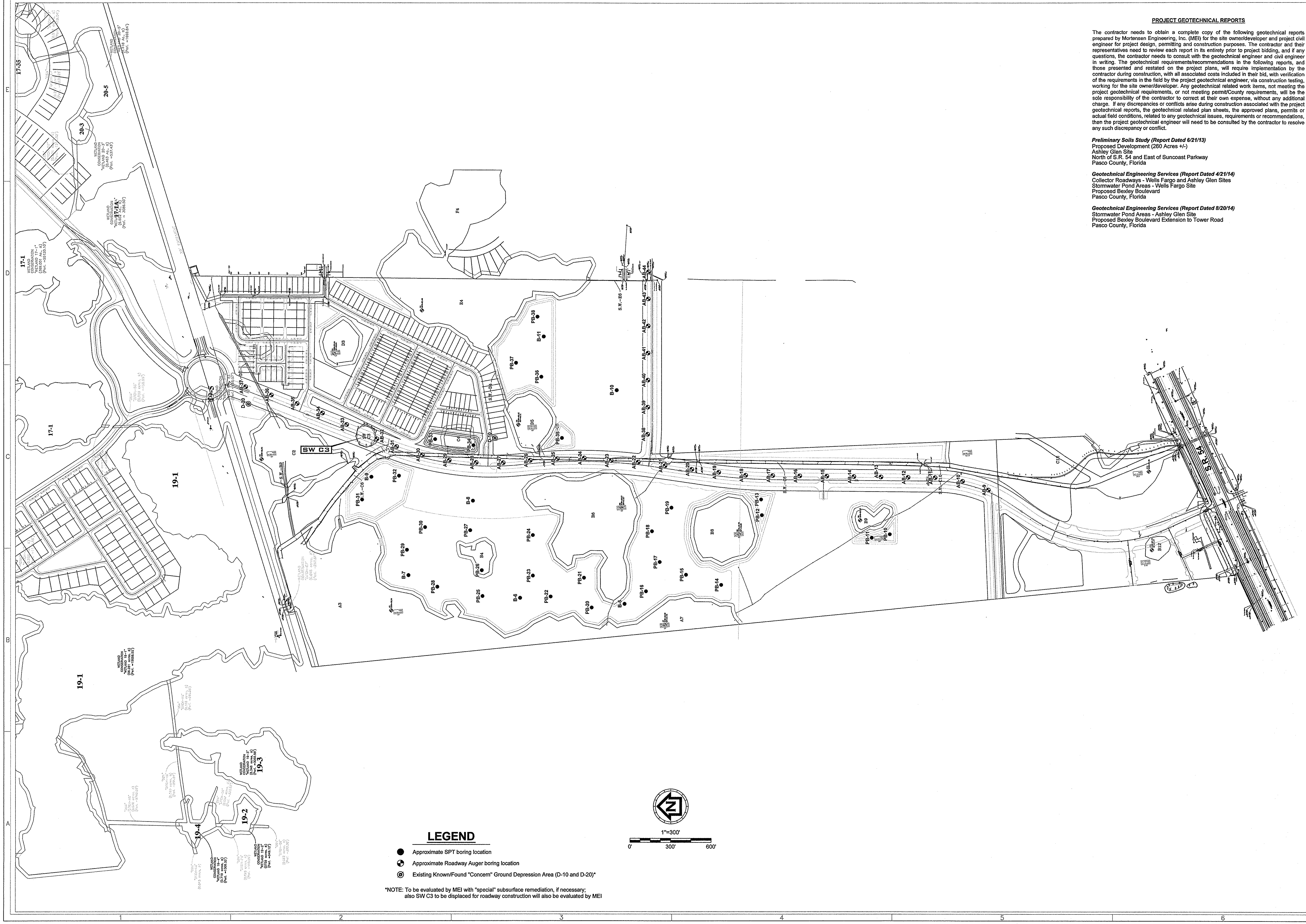

PROJECT GEOTECHNICAL REPORTS

The contractor needs to obtain a complete copy of the following geotechnical reports prepared by Mortensen Engineering, Inc. (MEI) for the site owner/developer and project civil engineer for project design, permitting and construction purposes. The contractor and their representatives need to review each report in its entirety prior to project bidding, and if any questions, the contractor needs to consult with the geotechnical engineer and civil engineer in writing. The geotechnical requirements/recommendations in the following reports, and those presented and restated on the project plans, will require implementation by the contractor during construction, with all associated costs included in their bid, with verification of the requirements in the field by the project geotechnical engineer, via construction testing, working for the site owner/developer. Any geotechnical related work items, not meeting the project geotechnical requirements, or not meeting permit/County requirements, will be the sole responsibility of the contractor to correct at their own expense, without any additional charge. If any discrepancies or conflicts arise during construction associated with the project geotechnical reports, the geotechnical related plan sheets, the approved plans, permits or actual field conditions, related to any geotechnical issues, requirements or recommendations, then the project geotechnical engineer will need to be consulted by the contractor to resolve any such discrepancy or conflict.

Preliminary Soils Study (Report Dated 6/21/13)
Proposed Development (260 Acres +/-)
Ashley Glen Site
North of S.R. 54 and East of Suncoast Parkway
Pasco County, Florida

Geotechnical Engineering Services (Report Dated 4/21/14)
Collector Roadways - Wells Fargo and Ashley Glen Sites
Stormwater Pond Areas - Wells Fargo Site
Proposed Bexley Boulevard
Pasco County, Florida

Geotechnical Engineering Services (Report Dated 8/20/14)
Stormwater Pond Areas - Ashley Glen Site
Proposed Bexley Boulevard Extension to Tower Road
Pasco County, Florida

LEGEND

- ● Approximate SPT boring location
- ◐ Approximate Roadway Auger boring location
- ◎ Existing Known/Found "Concern" Ground Depression Area (D-10 and D-20)*

*NOTE: To be evaluated by MEI with "special" subsurface remediation, if necessary; also SW C3 to be displaced for roadway construction will also be evaluated by MEI

MEI
MORTENSEN ENGINEERING, INC.
6408 W. Linebaugh Ave. Suite 111
Tampa, Florida 33625
Office: 813-908-5555
Fax: 813-908-3588
www.meitampa.com

PROPOSED BEXLEY BOULEVARD EXTENSION TO TOWER ROAD

GEOTECHNICAL DATA AND REQUIREMENTS

PREPARED FOR: NNP - BEXLEY, LLC

DATE	DESCRIPTION

DATE	DESCRIPTION

PROJECT NO:	14-10-07955
FILE:	SEE FILE TAG BELOW
DESIGN BY:	MTG
DRAWN BY:	DNH

FLORIDA PROFESSIONAL ENGINEER
MICHAEL T. GAGNE LICENSE No. 63006 STATE OF FLORIDA PROFESSIONAL ENGINEER
MICHAEL T. GAGNE
DATE: 8/28/14
REGISTRATION NO. 63006

B-100

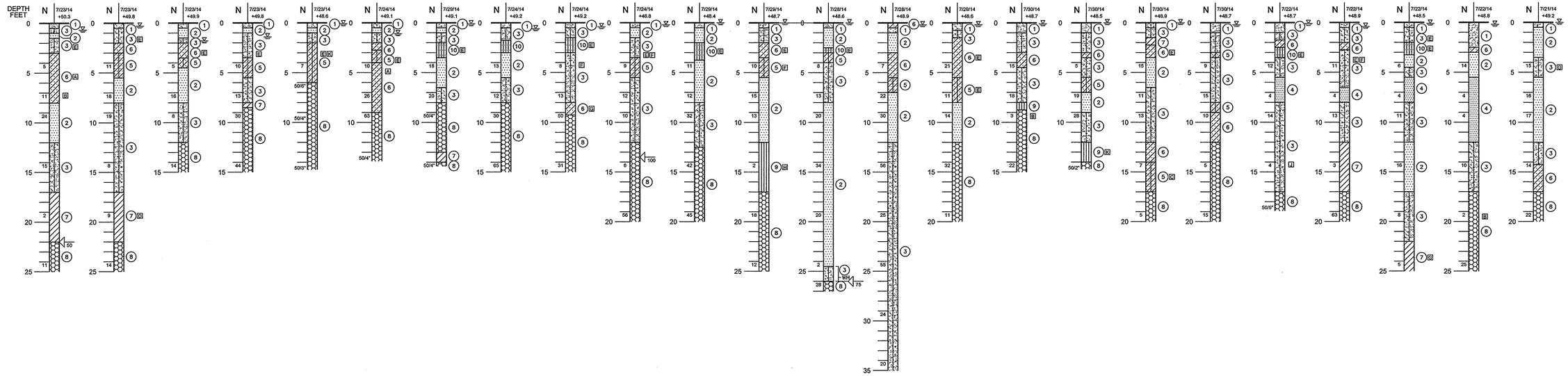

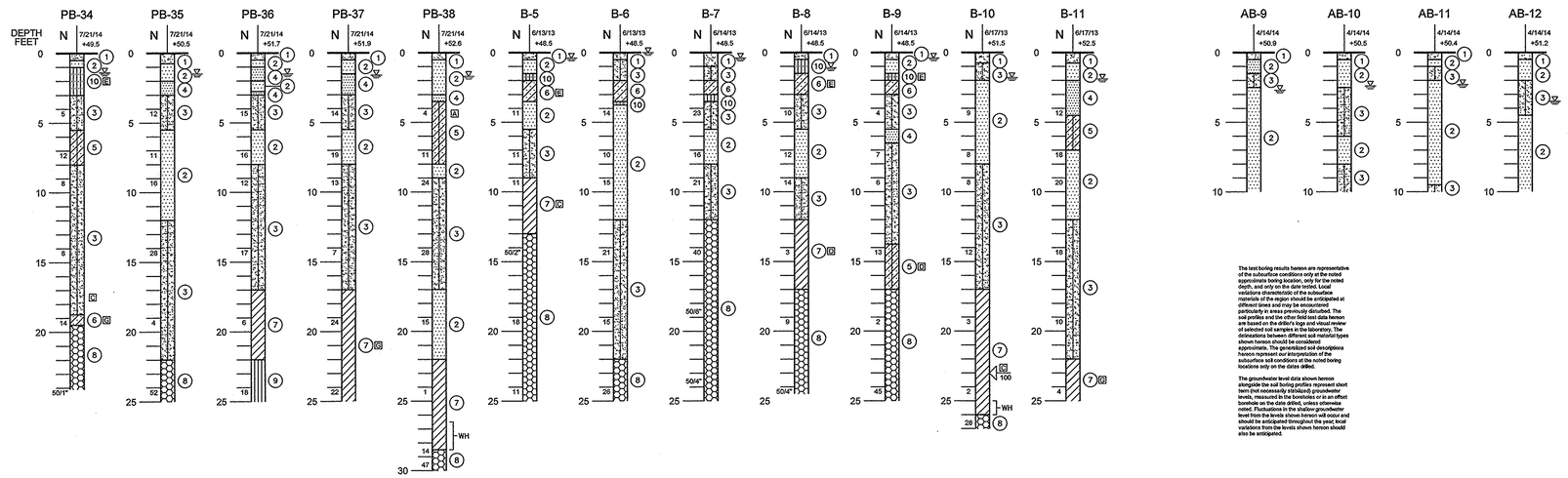

The test boring results hereon are representative of the subsurface conditions only at the noted approximate boring location, only for the noted depth, and only on the date tested. Local variations characteristic of the subsurface materials of the region should be anticipated at different times and may be encountered particularly in areas previously disturbed. The soil profiles and the other field test data hereon are based on the driller's logs and visual review of selected soil samples in the laboratory. The delineations between different soil material types shown on the profiles represent approximate. The generalized soil descriptions hereon represent our interpretation of the subsurface soil conditions at the noted boring locations only on the dates drilled.

The groundwater level data shown hereon alongside the soil boring profiles represent short term (not necessarily stabilized) groundwater levels observed in the open boreholes or offset boreholes on the date drilled, unless otherwise noted. Fluctuations in the shallow groundwater level from the levels shown hereon will occur and should be anticipated throughout the year; local variations from the levels shown hereon should also be anticipated.

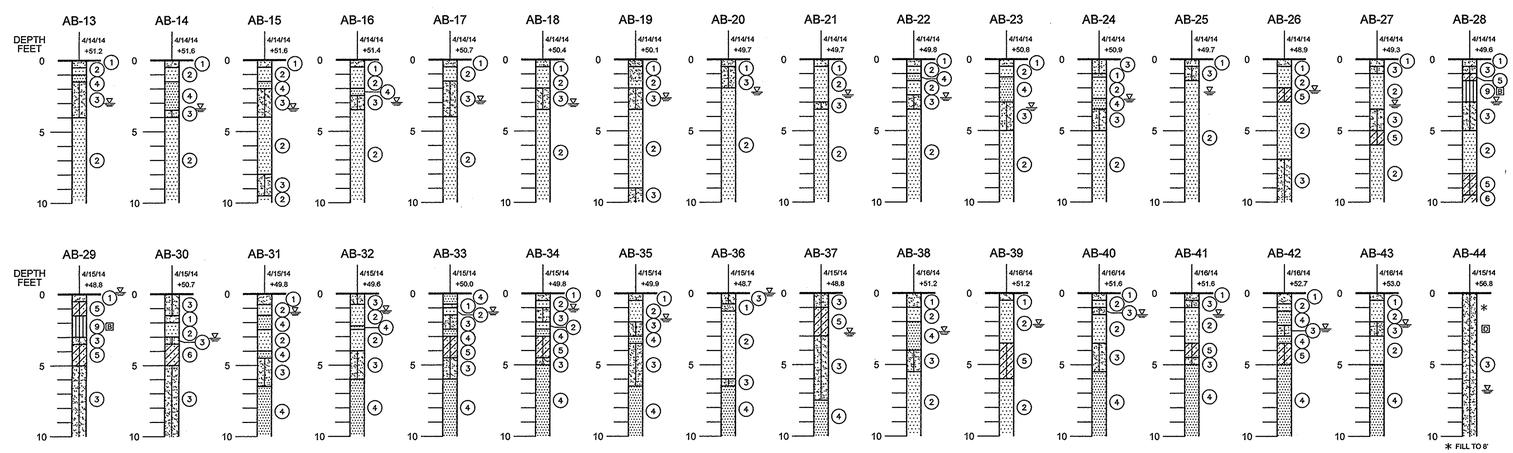

LEGEND

1. Gray to dark gray fine SAND to slightly silty fine SAND, trace organics (SP/SP-SM)
2. White to light brown fine SAND to silty fine SAND (SP/SP-SM/SM)
3. Brown or gray fine SAND to silty fine SAND (SP/SP-SM/SM)
4. Dark brown to reddish brown or black slightly silty fine SAND to silty fine SAND (SP-SM/SM)
5. Gray or brown silty to slightly clayey fine SAND (SM/SM-SC)
6. Gray or brown clayey SAND (SC)
7. Gray or brown to gray-green sandy CLAY to CLAY (CL/CH)
8. White or light gray weathered LIMESTONE
9. Light gray to gray or tan cemented SILT to clayey SILT (ML/MH)
10. Brown to white to gray cemented/sandy/silty/clayey/calcareous/ limestone fragments "CAPROCK"

Groundwater level, at time of field work

SP — Unified Soil Classification group symbol as determined by visual review

N — SPT "N" value in blows/foot

Loss of circulation (%)

WH — Fell under weight of rod & hammer

50/6" — Fifty blows for six inches

+50.3 — Ground Elevation per GeoPoint Surveying, Inc. (NAVD 88)

7/23/14 — Date of field work

"PB" & "B" borings

- A Very Clayey
- B Clay Seams
- C Limestone Fragments
- D Limestone Seams
- E Calcareous
- F Cemented
- G Silty
- H Chert Fragments
- I Silt Seams
- K Clayey

"AB" borings

- A Chert / Limestone Fragments
- B Calcareous
- C Sand Seams
- D Clay Seams

MORTENSEN ENGINEERING, INC.
6408 W. Linebaugh Ave. Suite 111
Tampa, Florida 33625
Office: 813-908-5555
Fax: 813-908-3588
www.meitampa.com

PROPOSED BEXLEY BOULEVARD EXTENSION TO TOWER ROAD

GEOTECHNICAL DATA AND REQUIREMENTS

PREPARED FOR: NNP - BEXLEY, LLC

DATE	DESCRIPTION

DATE	DESCRIPTION

PROJECT NO:	14-10-07955
FILE:	SEE FILE TAG BELOW
DESIGN BY:	MTG
DRAWN BY:	DNH

FLORIDA PROFESSIONAL ENGINEER

MICHAEL T. GAGNE LICENSE No. 63006 STATE OF FLORIDA PROFESSIONAL ENGINEER

MICHAEL T. GAGNE
DATE: 8/18/14
REGISTRATION NO. 63006

B-101

SHALLOW GROUNDWATER DATA TABLE
STORMWATER POND AREAS
PROPOSED BEXLEY BLVD. EXTENSION TO TOWER ROAD
SHALLOW GROUNDWATER DATA

Boring No.	Ground Elevation	Depth to GWT Below Grade (Ft.)	Elevation of GWT	Estimated Pre-Development NWSGWT Elevation (+/-)
PB-10	50.3	0.7	49.6	50
PB-11	49.8	0.3	49.5	50
PB-12	49.9	1.8	48.1	49
PB-13	49.8	1.4	48.4	49
PB-14	48.6	0.1	48.5	48.5
PB-15	49.1	1.1	48.0	48.5
PB-16	49.1	0.1	49.0	49
PB-17	49.2	0.6	48.6	49
PB-18	49.2	0.4	48.8	49
PB-19	48.8	0.2	48.6	49
PB-20	48.4	0.0	48.4	48.5
PB-21	48.7	0.0	48.7	48.5
PB-22	48.6	0.0	48.6	48.5
PB-23	48.9	0.2	48.7	48.5
PB-24	48.6	0.2	48.4	48.5
PB-25	48.7	0.1	48.6	48.5
PB-26	48.5	0.0	48.5	48.5
PB-27	48.9	0.0	48.9	48.5
PB-28	48.7	0.2	48.5	48.5
PB-29	48.7	0.1	48.6	48.5
PB-30	48.9	0.4	48.5	48.5
PB-31	48.5	0.1	48.4	48.5
PB-32	48.8	0.2	48.6	49
PB-33	49.2	0.0	49.2	49
PB-34	49.5 *	1.4	48.1	49
PB-35	50.5	1.5	49.0	50
PB-36	51.7	1.5	50.2	51
PB-37	51.9	1.6	50.3	51
PB-38	52.6	1.7	50.9	51.5

Notes: 1) All elevation data per GeoPoint Surveying, Inc. (NAVD88)
2) GWT = groundwater level (at time of fieldwork)
NWSGWT = normal wet season high groundwater level
* Estimated

SHALLOW GROUNDWATER DATA TABLE
PROPOSED BEXLEY BOULEVARD
SHALLOW GROUNDWATER DATA

Boring No.	Ground Elevation	Depth to GWT Below Grade (Ft.)	Elevation of GWT	Estimated Pre-Development NWSGWT Elevation (+/-)
AB-9	50.9	2.7	48.2	50.5
AB-10	50.5	2.4	48.1	50
AB-11	50.4	2.3	48.1	50
AB-12	51.2	3.5	47.7	50.5
AB-13	51.2	3.0	48.2	50.5
AB-14	51.6	3.4	48.2	51
AB-15	51.6	3.4	48.2	51
AB-16	51.4	3.0	48.4	51
AB-17	50.7	2.9	47.8	50.5
AB-18	50.4	3.1	47.3	50
AB-19	50.0	2.7	47.3	49.5
AB-20	49.7	2.3	47.4	49.5
AB-21	49.7	2.5	47.2	49.5
AB-22	49.8	2.7	47.1	49.5
AB-23	50.8	3.4	47.4	50
AB-24	50.9	2.8	48.1	50
AB-25	49.7	2.3	47.4	49.5
AB-26	48.9	2.2	46.7	49
AB-27	49.3	3.2	46.1	49
AB-28	49.6	3.0	46.6	49
AB-29	48.8	0.0	48.8	49
AB-30	50.7	3.1	47.6	50
AB-31	49.8	1.3	48.5	49.5
AB-32	49.6	1.2	48.4	49.5
AB-33	50.0	1.3	48.7	49.5
AB-34	49.8	1.1	48.7	49.5
AB-35	49.9	1.8	48.1	49.5
AB-36	48.7	0.0	48.7	49
AB-37	48.8	2.8	46.0	49
AB-38	51.2	2.7	48.5	50.5
AB-39	51.2	2.2	49.0	50.5
AB-40	51.6	1.5	50.1	51
AB-41	51.6	1.5	50.1	51
AB-42	52.7	2.5	50.2	52
AB-43	53.0	2.2	50.8	52.5
AB-44	56.8	6.8	50.0	53

Notes: 1) All elevation data per GeoPoint Surveying, Inc. (NAVD88)
2) GWT = groundwater level (at time of fieldwork)
NWSGWT = normal wet season high groundwater level

POND EXCAVATION DATA TABLE
STORMWATER POND AREAS
PROPOSED BEXLEY BLVD. EXTENSION TO TOWER ROAD
POSSIBLE POND EXCAVATION DEPTHS

Boring No.	Depth of Soil Suitable for Reuse[1] (Ft.)	Possible Excavation Depth[2] (Ft.)	Comments[3,4]
PB-10	17	17	Stratum 6 3' to 8' Stratum 7 @ 17'
PB-11	17	17	Stratum 6 2' to 3' Stratum 7 @ 17'
PB-12	12	10	Stratum 6 2' to 3.5' Stratum 8 @ 12'
PB-13	8	6	Stratum 7 @ 8' Stratum 8 @ 8.5'
PB-14	6	4	Stratum 8 @ 6'
PB-15	4	4	Stratum 6 2' to 3', Stratum 6 @ 4' Stratum 8 @ 9'
PB-16	8	6	Stratum 10 2' to 3.5' Stratum 8 @ 8'
PB-17	8	6	Stratum 10 2' to 3' Stratum 8 @ 8'
PB-18	8	7	Stratum 10 2.5' to 3' Stratum 8 @ 9'
PB-19	12	10	Stratum 8 @ 12'
PB-20	12.5	10	Stratum 10 2' to 4' Stratum 8 @ 12.5'
PB-21	12	12	Stratum 6 2' to 3.5' Stratum 9 @ 12'
PB-22	25	22	Stratum 10 2.5' to 3' Stratum 8 @ 26'
PB-23	35	30	Stratum 6 3' to 5.5'
PB-24	12	10	Stratum 6 1.5' to 5.5' Stratum 8 @ 12'
PB-25	8	7	Stratum 6 3' to 4.5' Stratum 9 @ 8'
PB-26	12	11	Stratum 6 3' to 3.5' Stratum 9 @ 12'
PB-27	12	12	Stratum 6/7 1.5' to 3.5' Stratum 6 @ 12'
PB-28	9	9	Stratum 6 @ 9'
PB-29	17	15	Stratum 6/10 1.5' to 3.5' Stratum 8 @ 17'
PB-30	12	12	Stratum 6 2' to 3' Stratum 7 @ 12'
PB-31	22	20	Stratum 10 2' to 3.5' Stratum 7 @ 22'
PB-32	17	15	Stratum 6 2.5' to 3' Stratum 8 @ 17'
PB-33	14	14	Stratum 6 @ 14' Stratum 8 @17'
PB-34	18.5	16.5	Stratum 10 1' to 3' Stratum 6 @ 18.5'
PB-35	22	20	Stratum 8 @ 22'
PB-36	17	17	Stratum 7 @ 17'
PB-37	17	17	Stratum 7 @ 17'
PB-38	22	20	Stratum 7 @ 22'

Notes: 1.) Soils suitable for reuse (Strata 1 - 5), after excavation, drying, mixing, proper placement and compaction, as structural fill material.
2.) Considering Note 1, and level of clay and/or weathered limestone (subject to permitting).
3.) Stratum 6 and 7 clayey materials, and Stratum 10 (if encountered) are unsuitable for reuse in roadway/building pad areas.
4.) If limestone (Stratum 8) encountered, excavation shall cease and geotechnical engineer shall be notified.

GENERAL GEOTECHNICAL REQUIREMENTS
POND EXCAVATION AND SOIL REUSE

1. Considering the results of the test borings in proposed stormwater pond areas; the soil material types classified as fine sand to silty fine sand (Strata 1 – 4) discovered to varying depths, with typically 15% fines or less passing the No. 200 sieve, after excavation and drying, should be considered most suitable for reuse as roadway and mass grade area structural fill, and as utility pipeline and manhole backfill. The slightly clayey fine sands of Stratum 5, with typically 15% to 25% fines passing the No. 200 sieve, if encountered, should also be suitable for reuse as structural fill after excavation (except in roadway areas), assuming some additional drying and mixing with the upper fine sands prior to reuse and compaction. Temporary dewatering during pond excavation operations will be a significant construction issue.

2. The deeper clayey sands (Stratum 6), and the deeper sandy clays to clays (Stratum 7) should not be excavated from any pond areas, as they have little to no reuse value during land development; and SWFWMD and Pasco County will prohibit any significant excavation of these clayey semi-confining unit materials over the weathered limestone (Stratum 8). No deep semi-confining unit clayey materials (Strata 6 and/or 7) and no weathered limestone (Stratum 8) materials should be excavated or removed from any pond areas. If deeper clayey materials (Strata 6 and/or 7) or any limestone materials (Stratum 8) are encountered during any pond excavation operations, the contractor shall immediately cease excavation in that area, report any such incidents to the project engineers, and shall await direction from the project geotechnical consultant regarding how to proceed in that area.

3. Please review the Pond Excavation Data Table in the geotechnical report for the possible pond excavation depth at each pond area test boring location (subject to permitting); considering the presence of reusable soils (Strata 1 - 5); the depth, thickness and integrity of the deep semi-confining unit clayey materials (Strata 6 and/or 7); and the depth to weathered limestone (Stratum 8). The contractor needs to be provided all the geotechnical reports relevant to this project (for bidding and implementation). If there exists any discrepancies or conflicts between any of the requirements, the pond excavation table, the project plans, or the project permits, the contractor needs to notify the project engineers for resolution and final direction.

4. The following note needs to be enlarged and put on the project construction plans (Grading & Drainage Plan sheets) for the subject project.

   "No pond excavation (for any purpose) shall extend beyond or below the permitted design depths shown on the drawings and on the Pond Excavation Data Table, included in the project geotechnical report, unless additional testing supports otherwise, and such operation is consistent with permit requirements; and no lower semi-confining unit clayey materials (Strata 6 and/or 7) and no weathered limestone materials (Stratum 8) shall be excavated, regardless if these materials are encountered within the permitted excavation depths shown on the drawings or above the level noted on the Pond Excavation Data Table. No temporary dewatering ditches or sumps (for pond excavation) shall extend below the permitted design depths shown on the drawings and on the Pond Excavation Data Table. If any lower semi-confining unit clayey materials (Stratum 6 and/or 7) or weathered limestone materials (Stratum 8) are encountered above the permitted excavation depths (or above the levels on the Pond Excavation Data Table), then excavation operations in that pond area shall immediately cease in the general area, and the project geotechnical consultant shall be notified to provide subsequent evaluations/recommendations, as appropriate, which shall be implemented by the contractor. All pond excavation operations by the contractor shall be coordinated with a senior field technician working directly for the project geotechnical consultant. Any significant unstable bottom areas discovered or created, and any significant bottom boils, shall be documented and repaired/improved by the contractor, as directed by the geotechnical consultant, prior to obtaining final pond acceptance."

5. It is important to note that during pond excavation operations, because the shallow aquifer system will be temporarily dewatered (lowered) to at least the pond bottom elevation (+/-), and the potentiometric level (or pressure) in the limestone Upper Floridan Aquifer system will remain at a significantly higher level (as noted in the project geotechnical report), the potential exists that excavation bottom "boils" may develop during excavation operations, through natural vertical sand seams or wicks, through inconsistencies in the clayey semi-confining unit over the limestone, or because of the absence (or thin layer) of clayey semi-confining unit material over the limestone surface. Pond bottom "boils" could produce significant volumes of additional groundwater requiring removal, could create turbidity problems, and after excavation they could become "drains" creating post-construction problems. The contractor must be prepared to prevent, deal with and properly handle these conditions/consequences; and the contractor must include any additional associated work/equipment or costs in their construction bid relative to effectively and properly handling/resolving these issues satisfactory to all parties. Any pond excavation bottom "boils" (and/or any pond bottom problems) must be brought to the immediate attention of the geotechnical consultant by the contractor, and must be properly repaired/sealed by the contractor, satisfactory to all parties, prior to final pond completion.

MEI/Mainfile/410.4/07955.GenGeotReqPonds.docx (last revised 4/21/14)

Geotechnical Engineer Certification: Regarding Project Construction Plans and Section 807 LDC "Soils and Geotechnical Hazards" Ordinance

This certification is for compliance with Section 807.4 LDC (*Soils and Geotechnical Hazards* ordinance, Section 807 LDC). The relevant test borings on the project plans and included in the project geotechnical reports were performed under my professional direction, and to the best of my knowledge, should be representative of the project site subsurface conditions. The general and special (if any) geotechnical engineering evaluations and recommendations provided in the project geotechnical report, for compliance with Section 807 LDC, were prepared under my direction, and are included on MEI prepared Sheets B-100 to B-102, which are part of the project construction plan set prepared by Clearview Land Design, P.L. (CLD). We have reviewed portions of the project construction plans prepared by CLD (those portions pertaining to our involvement and areas of expertise), we have provided geotechnical related comments to CLD in past correspondence, including MEI Sheets B-100 to B-102, and to the best of my knowledge, CLD's design/construction plans incorporate and consider MEI's geotechnical engineering data, evaluations, and recommendations, requiring implementation by various parties and subsequent verification testing by MEI during the project construction phase.

Print Name: _____ Date: _____

Sign/PE Seal: _____

Mainfile/404/07955.plans.cert.docx last revised 8/21/14

GENERAL GEOTECHNICAL REQUIREMENTS ROADWAY AND MASS GRADE AREAS

1. Considering the shallow soil and groundwater conditions on-site and the potential for higher groundwater levels during normal wet seasons, we recommend that the proposed collector roadways be constructed with either a soil cement base course or a crushed concrete aggregate base course, over a compacted sandy soil subgrade (less than 15% fines), minimum LBR of 20; unless a stabilized subgrade LBR of 40 is required for pavement design by the project civil engineer. With either base course referenced above, pavement grades should be selected such that there is at least 18 inches of separation between the bottom of the base course and the anticipated normal wet season high groundwater level (and this assumes pavement underdrains along both sides of a conventional width collector roadway, possibly also in the center median, with positive discharge at all times at least above the receiving pond's control level). The natural fine sand subgrade beneath the base or stabilized subgrade, and any fill used to raise the roadway area, after topsoil stripping, should be compacted to a minimum of 98% of the maximum modified Proctor dry density in accordance with AASHTO T-180, to a depth of 1-foot below the stripped grade. A soil cement base, if used as the base course alternate, should meet PCA and Pasco County requirements, should have a 300 psi 7-day compressive strength, and should be compacted to a minimum of 98% of AASHTO T-134; soil cement compressive strengths in excess of 400 psi should be avoided. If crushed concrete aggregate is used as the base course in lieu of soil cement, the crushed concrete material should have a minimum limerock bearing ratio (LBR) of 150, should have a minimum compacted dry density of 114.0 pcf, should generally meet FDOT grainsize criteria for graded aggregate base, should be free of all deleterious materials, and should be compacted to a minimum of 98% of the maximum modified Proctor dry density in accordance with AASHTO T-180 (and should be acceptable to Pasco County). If crushed concrete is considered as the base material, then we recommend that the proposed crushed concrete aggregate borrow source be evaluated by our office prior to any material arriving on-site. The actual pavement thickness design should be performed by the project civil engineer considering traffic loadings and volume data, and Pasco County standards.

2. The fine sand (natural) subgrade soils beneath all roadway/pavement areas, and any approved sandy fill materials (Strata 1-4) used to raise the roadway areas, after topsoil stripping, shall be heavily proofrolled and compacted to a minimum of 98% of the maximum modified Proctor dry density in accordance with AASHTO T-180, tested to a depth of 1-foot below the stripped or cleared grade. The roadway embankment sandy fills, or natural sands, within 24-inches of the bottom of the base (if no stabilized subgrade), or within 24-inches of the bottom of the stabilized subgrade (if there is stabilized subgrade), shall be fine sand materials with 15% fines or less passing the No. 200 sieve (typically A-3, SP or SP-SM sand materials). The uppermost fine sands (after topsoil material removal) along the upland portions of the roadway areas, should in general, have less than 15% fines passing the No. 200 sieve. In general, a majority of the upper Strata 1-4 (fine sand materials), free of organics, should have less than 15% fines passing the No. 200 sieve.

3. Per FDOT Index No. 500, no plastic clayey sands, silts or clays shall be present within 2 feet of the bottom of the proposed roadway base course elevation (or bottom of a stabilized subgrade); this separation distance will need to be checked and confirmed during roadway design and construction. If this minimum 2-foot separation distance is not present in a roadway area, then the clayey materials need to be completely removed to obtain this minimum 2-foot separation depth at least the entire width of the roadway ROW, and replaced with suitable sandy soils compacted to at least 98% modified Proctor for each 1-foot lift. After clayey soil removal, the exposed clayey soil surface, prior to refilling with sand, should be of acceptable moisture content, stable and unyielding to form an adequate subbase for the sandy soil layer beneath the base. This requirement should allow for acceptable pavement and underdrain performance. The civil engineer needs to consider this FDOT Index during road design and road grade selection, and provide direction to the contractor for areas where these conditions warrant attention.

4. During roadway alignment and mass grade area stripping operations (after root-raking and demucking operations), all surficial topsoils, organic sands, mucks, deleterious fills, roots, stumps, existing fills, all existing stockpiles, and all buried organics and deleterious fills, etc. shall be stripped and completely removed, plus at least a 10-foot margin beyond the roadway ROW, or limits of the mass grade area; all these unsuitable materials shall be either hauled offsite or placed in unsuitable material disposal areas onsite after permission and direction from the project engineers, with developer consent. All stripped areas (and root-raked and demucked areas) should be checked by the geotechnical consultant before proofrolling and any fill placement. All roadway areas and mass grade areas shall be root-raked to a depth of at least 12 inches by the contractor prior to any compaction or fillings. Any buried organic materials known or later discovered by the contractor or engineers, shall be uncovered and completely removed during stripping/demucking operations in all roadway/pavement areas and mass grade areas.

5. After stripping (and any demucking) operations are completed and the subgrade over all the roadway/pavement areas and mass grade areas is checked by the geotechnical consultant, all the roadway/pavement areas and mass grade areas shall be proof-rolled with a large diameter vibratory drum roller, under the full-time observation/monitoring by a senior field technician working for the project geotechnical consultant; subject to Item 6 below. The vibratory drum roller compactor shall be one of the larger models reasonably available; about 30,000 lbs. operating weight, with at least 60,000 lbs. of centrifugal force. The contractor's proof-rolling equipment shall make 20 overlapping passes over all roadway areas and mass grade areas; subject to Item 6 below, at a working pace of about 10 feet/sec. Any significant soft or yielding ground/subgrade areas, or ground depressions, caused by or discovered during proof-rolling operations, shall be noted and reported to the project engineers by the contractor, and then shall be treated by the contractor as directed in the field by the geotechnical consultant.

6. After acceptable proofrolling; all roadway and mass grade areas stripped subgrades shall be compacted to 98% of AASHTO T-180 to a depth of 1-foot below the stripped/proofrolled surface; with density testing by the geotechnical consultant. Depending upon the time of the year and daily weather conditions, the contractor may need to implement some effective shallow groundwater and surface water dewatering measures and controls to facilitate and accomplish the above proofrolling requirement and the above subgrade density testing requirement. After acceptable stripped subgrade density testing, the contractor shall fill all roadway areas with approved fine sands (Strata 1-4), and mass grade areas with Strata 1-5, in 12-inch +/- loose lifts compacted to a minimum of 98% of AASHTO T-180, up to finished design grades; no subsequent fill lifts shall be placed by the contractor until the previous lift is compacted to the required density. If there exists any discrepancies or conflicts between any geotechnical requirements, the project geotechnical reports, the project plans, or the project permits, the contractor needs to notify the project engineers for resolution and final direction.

7. The contractor must select and operate all their construction/compaction/proofrolling/dewatering equipment such that no adjacent existing structures or underground utilities are adversely impacted. All roadways/mass grade areas adjacent to existing easements need subgrade improvement for proper support; this improvement needs to be accomplished by the contractor, satisfactory to the geotechnical consultant, without adversely impacting any adjacent existing structures, pipelines, etc. The contractor may need to implement effective procedures to dampen construction (and dewatering) vibrations/impacts beyond the new roadway and mass grade area limits, and should also provide ground vibration/settlement monitoring procedures in the field (if necessary) to document that their operations are not adversely impacting any adjacent existing structures/pipelines. The contractor must be experienced and prepared to handle the above issues; and the contractor must include any additional associated work/equipment or costs in their bid relative to effectively and properly handling/resolving these issues.

8. Depending upon final pavement grades (low points), it may be necessary to utilize pavement underdrains to control temporary wet season groundwater levels adequately below the pavement base. Pavement underdrains need to have positive discharge at all times. At least the current Pasco County guidelines for roadside underdrain locating, placement, design and construction should be followed by the project civil engineer and contractor. Pavement underdrain cleaning and routine maintenance (at least once a year) is essential for long-term effective working performance, and shall be the sole responsibility of the County for public roads and the developer or CDD for private roads.

9. Based on the test boring results provided, the fine sandy soils (Strata 1 – 4) excavated for utility pipeline/manhole installations should be reusable as general backfill over pipe and around structures (and as structural fill), assuming proper drying and placement. Strata 1 - 4 sands are the more desirable structural fill materials and utility trench/manhole backfill materials. Slightly clayey fine sands (Stratum 5) will require some additional drying and mixing with the upper sands by the contractor prior to reuse. The contractor should anticipate some additional handling, drying and mixing time when utilizing slightly clayey fine sand materials as structural fill or as utility trench or structure/manhole backfill. Clayey sand and sandy clay materials (Strata 6 and 7), if encountered during excavation, shall not be reused as utility trench or manhole/structure general backfill, or as pavement or mass grade area structural fill.

10. During utility manhole and storm or sanitary sewer pipeline excavation, the contractor could encounter some clayey sands and/or plastic clays (Strata 6 and 7), which after excavation will not be suitable for reuse as pipeline trench or manhole/structure backfill. The contractor must be prepared to handle these situations, and any associated potential dewatering problems that might arise during deeper utility/manhole excavations; and the contractor must include any associated work/equipment or costs in their construction bid relative to effectively handling and dealing with any excavation/dewatering issues. Any pipeline trench or manhole/structure excavation bottom "boils" shall be reported to the project engineers by the contractor, and then shall be properly repaired/sealed by the contractor, prior to pipe/foundation placement or backfilling, with input from the geotechnical consultant. Temporary dewatering will be a significant construction issue, and must be effective and sustained to accomplish all the requirements and confirming testing. The contractor, prior to placing any pipe bedding or piping, shall improve any significant trench bottom or structure subgrade concerns to an acceptable condition, as directed in the field by the geotechnical consultant.

11. In general, all surficial and buried organic laden sand/muck/debris/deleterious fill materials, etc., currently known or later discovered by the contractor or via onsite testing, are unacceptable beneath roadway and mass grade areas, because of the elevated risk of unacceptable post-construction settlement. In general, all these type unsuitable materials, discovered during construction, need to be completely removed and replaced (by the contractor) with acceptable structural fill materials properly compacted to at least 98% of AASHTO T-180, under geotechnical observation and testing. Also, all existing fills (of acceptable quality), in roadway and mass grade areas, will need to be adequately compacted to the same criteria, prior to additional fill placement; with confirming density testing of each 1-foot of fill material.

MEI/Mainfile/410.4/07955.GenGeotReqRoad.doc (last revised 4/21/14)

MORTENSEN ENGINEERING, INC.
6408 W. Linebaugh Ave. Suite 111
Tampa, Florida 33625
Office: 813-908-5555
Fax: 813-908-3588
www.meitampa.com

PROPOSED BEXLEY BOULEVARD EXTENSION TO TOWER ROAD

GEOTECHNICAL DATA AND REQUIREMENTS

PREPARED FOR: NNP - BEXLEY, LLC

DATE	DESCRIPTION

DATE	DESCRIPTION

PROJECT NO: 14-10-07955
FILE: SEE FILE TAG BELOW
DESIGN BY: MTG
DRAWN BY: DNH

FLORIDA PROFESSIONAL ENGINEER

MICHAEL T. GAGNE LICENSE No. 63006 STATE OF FLORIDA PROFESSIONAL ENGINEER
MICHAEL T. GAGNE
DATE: 8/28/14
REGISTRATION NO. 63006

B-102