PASCO COUNTY, FLORIDA
INTEROFFICE MEMORANDUM

TO: Joaquin Servia
Development Review Manager

DATE: 8/10/15 FILE: PDD15-1488

SUBJECT: Recreation Alternative Preliminary Site/Construction Plan and Stormwater Management Plan and Report with Alternative Standards Request (Project No. SML15-021) Recommendation: Approval with Conditions (Attachment No. 1)

FROM: Beverly E. Trudell
Senior Development Review Technician

REFERENCES: Land Development Code, Sections 300, Procedures; 403, Site Development; and 900, Development Standards; Comm. Dist. 2

PROJECT DESCRIPTION:

Commission District:	The Honorable Mike Moore
Project Name:	Recreation Alternative
Developer's Name:	Jonathan Ash
Location:	On the east side of Land O'Lakes Boulevard and north of Morgan Road (Attachment No. 2)
Parcel ID No.:	25-26-18-0000-01900-0000 – 2840 Land O' Lakes Blvd. Land O'Lakes, FL 34639
Land Use Classification:	ROR – Retail/Office/Residential
Zoning District:	C-2 General Commercial
Acreage:	.47 project area total area 2.51 Acres, m.o.l.
Use/Square Feet:	Micro-brewery with tavern 913 Square Feet
Flood Zone:	X
Water/Sewage:	Well/Septic
Transportation Analysis Zone:	242
Mobility Fee Assessment District:	A
Mobility Fee Collection/Benefit District:	2
Roads:	Public
Certificate of Capacity:	Initial

DEVELOPER'S REQUEST:

The applicant/developer of Recreation Alternative is requesting Preliminary Site/Construction Plan and Stormwater Management Plan and Report approval for a 906-square-foot micro-brewery with tavern. They are remodeling the existing frame building and all other structures will be demolished on the project site area. (Attachment No. 3). Also requested is an alternative standard from the requirements of the Land Development Code (LDC), Section 905.2, Landscaping Buffer and Screening Requirements, as further explained below (Attachment No. 4).

BACKGROUND AND FINDINGS OF FACT:

See Attachment No. 5

ALTERNATIVE STANDARDS REQUEST

The applicant/developer has requested a specific alternative standard from the LDC, Section 905.2, Landscaping Buffer and Screening requirements.

> Subsection 905.2.D, Type B Buffers, which, if approved, would relieve the applicant/developer of the requirements of the Type B 15-foot landscape buffers located on the west and south. On the south they are reducing the buffer to 7.5 feet and on the west the buffer will be reduced to 1- foot. Both buffers will have a 6-foot high PVC opaque fence.
>
> Relief is being sought pursuant to the LDC, Section 407.5.B. 2, as the purpose for the alternative standards which reads as follows: 2.) No feasible engineering or construction solutions can be applied to satisfy the regulation."
>
> The applicant states:

2) "Due to the current location of the existing paved parking area, and the existing frame structure proposed to be remodeled, the width of the Type B Buffer cannot be met within the limits of these site features. In order to reduce the proposed impervious areas within the project limits, it was most feasible to add onto the existing pavement, instead of removing and replacing pavement in order to comply with the Type B Buffer. Removing and relocating the existing frame structure and existing paved parking area to meet the required Type B Buffer would create additional impervious area on site and also create additional site disturbance".

STAFF ANALYSIS:

Staff has reviewed the applicant's request and recommends approval. The developer is remodeling the existing structure that is on the site and is unable to provide the required Type B Buffers but is still providing the six-foot high PVC Opaque fence on the west and south. They are saving all the non-invasive vegetation to leave natural. This meets the intent and purpose of the code.

CONCURRENCY ANALYSIS:

An Initial Certificate of Capacity is being issued for 913 square foot one-story building. Any conditions required pursuant to the issuance of the certificate are attached to the Initial Certificate of Capacity.

RECOMMENDATION:

The Planning and Development Department recommends approval of the Preliminary Site/ Construction Plan and Stormwater Management Plan and Report with Alternate Standards request with the attached conditions.

ATTACHMENTS:

1. Conditions of Approval
2. Location Map
3. Site Plan
4. Alternative Standard Visual
5. Background and Findings of Fact
6. Initial Certificate of Capacity

PLANNING AND DEVELOPMENT DEPARTMENT ACTION:

APPROVED ☐ B.C.C. ☐ D.R.C. ☐ P.D.D.

Pasco County
By: [signature] Date 8/10/15
For Substantial Compliance With
The Applicable Provisions of Pasco County
Land Development Regulations
And Their Intent

ATTACHMENT NO. 1 – CONDITIONS OF APPROVAL
RECREATION ALTERNATIVE

Hard-Copy Site Development Permit

1. Before commencing approved construction activities, the applicant/developer or project contractor shall obtain from the Planning and Development Department an authorization to commence approved construction, a.k.a. "a hard copy Site Development Permit." To obtain said authorization, the following, as applicable, must be submitted to the Planning and Development Department:

   a. The completed notarized acknowledgment portion of the attached agenda memorandum. The owner/developer are hereby notified that the effective date of this development approval shall be the date of the final County action; however, no activity shall commence on site until such time as the acknowledgment portion of this document is completed (including notarization) and received by the Planning and Development Department.

   b. A copy of the Southwest Florida Water Management District (SWFWMD) Permit and Plan. In the event the SWFWMD Permit and Plan require any changes to the County-approved plan, an amendment to the County-approved plan shall be submitted for review and approval prior to the issuance of the Site Development Permit.

   c. A copy of all required State and Federal permits from the appropriate agencies, including drawings, plans, etc.

   No construction shall commence until the permit has been properly posted on the site.

General

2. The developer acknowledges that any provisions of Pasco County ordinances and any rezoning conditions of approval not specifically waived shall be in full force and effect, including all impact fee ordinances. In the event ordinances/resolutions are adopted by the Board of County Commissioners (BCC) including, but not limited to, solid waste, public safety, or wildlife, the developer shall be required to comply with such ordinances/resolutions.

3. The developer acknowledges that approval of this Preliminary Site Plan (PSP) does not establish vested rights with respect to construction of the project. Further, the developer acknowledges that no permit shall be issued or plat approved without the issuance of a Final Certificate of Capacity.

4. The applicant/developer acknowledges that approval of the alternative standards request as stated is based upon representation as set forth in the PSP submittal dated August 7, 2015. In the event that the PSP is deemed void and/or approval is withdrawn, then the alternative standards request shall be considered void and all future development shall thereafter comply with all regulations currently in effect and shall be

reviewed and approved as provided therein. PSP approval is contingent upon approval of alternative standard(s).

5. The developer acknowledges that in accordance with the LDC, Section 1301, Concurrency, the Initial Certificate of Capacity shall expire as approved on the attached Concurrency Certificate.

6. The applicant/developer or successors in interest are advised of the following restrictions:

   a. No owner of the property within the development may construct or maintain any building, residence, or structure, or undertake or perform any activity in the wetlands, buffer areas, and upland conservation areas described in the approved plan or record plat unless prior approval is received from the SWFWMD pursuant to environmental resource permitting.

   b. No owner of the property within the development may construct or maintain any building, residence, or structure, or undertake or perform any activity within the 100-year floodplain described in the approved plan and/or record plat of the subdivision unless prior approval is received from the SWFWMD pursuant to environmental resource permitting.

   c. No owner of the property may undertake any roadway improvements within this development unless prior written authorization or notification of exemption is received from the SWFWMD pursuant to environmental resource permitting.

7. All construction work, including roads, drainage, and utilities, shall be constructed in accordance with County design standards and tested in compliance with the Engineering Services Department's *Testing Specifications for Construction of Roads, Storm Drainage, and Utilities*.

8. The applicant/developer shall acknowledge that should the County collect funds under a guarantee document, the developer shall authorize the County or its designee access to the property in question to complete the required work.

9. The applicant/developer shall acknowledge that should the County be required to institute legal proceedings in order to collect any funds under a guarantee document, the developer shall be responsible for attorney's fees and court costs incurred by the County in such action.

10. The developer acknowledges that an appeal may be filed against the decision of the Planning and Development Department within 30 days of the date of this approval. Any development that takes place within the 30-day-appeal deadline shall not establish vested rights with respect to construction of the project.

11. Site plans approved by the Planning and Development Department are the final approved documents. Changes/additions/deletions to approved site plans; i.e., building size, location, loading zones, etc., require revised site plan submittal, review fee, and approval in accordance with the LDC, Sections 300, 403, and 900.

12. The applicant/developer shall notify the Project Management Division at least five working days prior to commencing any activity on the site.

13. Where underground water mains and hydrants are to be provided, they shall be installed, completed, and in service prior to combustibles being brought on site (National Fire Protection Association, NFPA-1, 16.4.3.1.3).

14. The applicant/developer acknowledges that the PSP and all associated alternative standards requests shall expire within six years of the original approval date of the PSP if Building Permits for the entire development have not been issued. In the event that the applicant/developer does not comply with this provision, all plans related to the uncompleted portion of the PSP approval shall be deemed void, and approval shall be deemed withdrawn, unless an extension has been obtained from the County Administrator or designee prior to expiration of any of the time limits provided above. Any extension shall be applied for at least 60 days prior to expiration of any of the above time limits.

    In the event the PSP is voided, all subsequent submittals shall comply with regulations in effect at the time of the said resubmittals.

Construction Plan

15. Unless otherwise approved by the County Engineer, driveway, road, and intersection improvements requiring roadway widening and/or left-turn, storage lane construction shall also include an asphaltic concrete overlay of the entire limits of the intersection improvement area to the County's specifications as approved by the County.

16. All construction within the County right-of-way will require a Right-of-Way Use Permit. The review and issuance of the Right-of-Way Use Permit shall be conducted in accordance with the LDC, Section 406.5, Right-of-Way Use Permit, and must be obtained prior to commencement of construction. The developer shall ensure that any improvements installed in rights-of-way are constructed to County standards

17. The developer shall provide fire protection in compliance with the Pasco County Code of Ordinances, Chapter 46, Article III, and any subsequent amendments.

18. Prior to any construction activity, the developer shall ensure that proper erosion and sediment control measures are in place. The applicant/developer or project contractor shall notify the Stormwater Management Division at least two working days prior to commencing any site preparation, including clearing and grubbing work, for a preinspection of the sediment and erosion-control devices. The developer shall control all fugitive dust originating from the project site and shall indicate on the construction drawings the manner in which fugitive dust is to be controlled. Further, all retention pond side slopes and associated swales shall be sodded to prevent soil erosion.

19. The applicant/developer acknowledges, in accordance with the LDC, Section 905.2, Landscaping and Buffering, wooden fences are not allowed as a visual screen in any of the buffer areas. If the applicant/developer proposes the use of a fence for a visual

screen within any buffer area, vinyl fencing or chain-link fencing with black-out fabric or slats shall be used.

20. The applicant/developer acknowledges, in accordance with the LDC, Section 905.2, Landscaping and Buffering, any plant materials of whatsoever type and kind required by the Landscape and Buffering regulations and this approval, shall be replaced within thirty days of their demise and/or removal.

21. If, during construction activities, any evidence of historic resources including, but not limited to, aboriginal or historic pottery, prehistoric stone tools, bone or shell tools, historic trash pits, or historic building foundation, are discovered, work shall come to an immediate stop, and the Florida Department of Historic Resources (State Historic Preservation Officer) and the County shall be notified within two working days of the resources found on the site.

22. If, during construction activities, any evidence of the presence of State and Federally protected plant and/or animal species is discovered, work shall come to an immediate stop, and the County shall be notified within two working days of the plant and/or animal species found on the site.

Development Standards

23. The commercial dimensional standards are in accordance with the appropriate zoning district regulations and uses contained within the LDC for specific parcel.

Building Permit/Certificate of Occupancy

24. Site plans submitted with Building Permit applications are invalid as to final site approval unless stamped approved by the Planning and Development Department. These plans are submitted to show building location in regard to property line, other buildings, etc., only. The site must conform to those plans submitted and/or approved by the Planning and Development Department in accordance with the LDC, Sections 300 and 403.

25. The applicant/developer acknowledges that a Building Permit shall be obtained for all structures that have a footer, regardless of size, through the Central Permitting Division; i.e., including, but not inclusive of, buildings, accessories, dumpster walls, and retaining walls.

26. A Registered Landscape Architect or other person as authorized by Chapter 481, Florida Statutes, as amended or other type of professional as approved by the County Administrator or designee, shall conduct a final field inspection. A Certificate of Compliance shall be provided to the County prior to issuance of the CO.

27. The owner/developer shall arrange for a final site inspection approval by the Engineering Services Department prior to the issuance of the CO/use of the permitted facilities.

OWNER'S ACKNOWLEDGMENT:

_____
Date

_____
Signature

_____
Print Name

_____
Title

STATE OF FLORIDA
COUNTY OF _____

The foregoing instrument was acknowledged before me this _____ (date), by _____ (name of corporation acknowledging) a _____ (State or place of incorporation) corporation, on behalf of the corporation. He/she is personally known to me or who has produced _____ (type of identification) as identification.

Seal:

_____
NOTARY

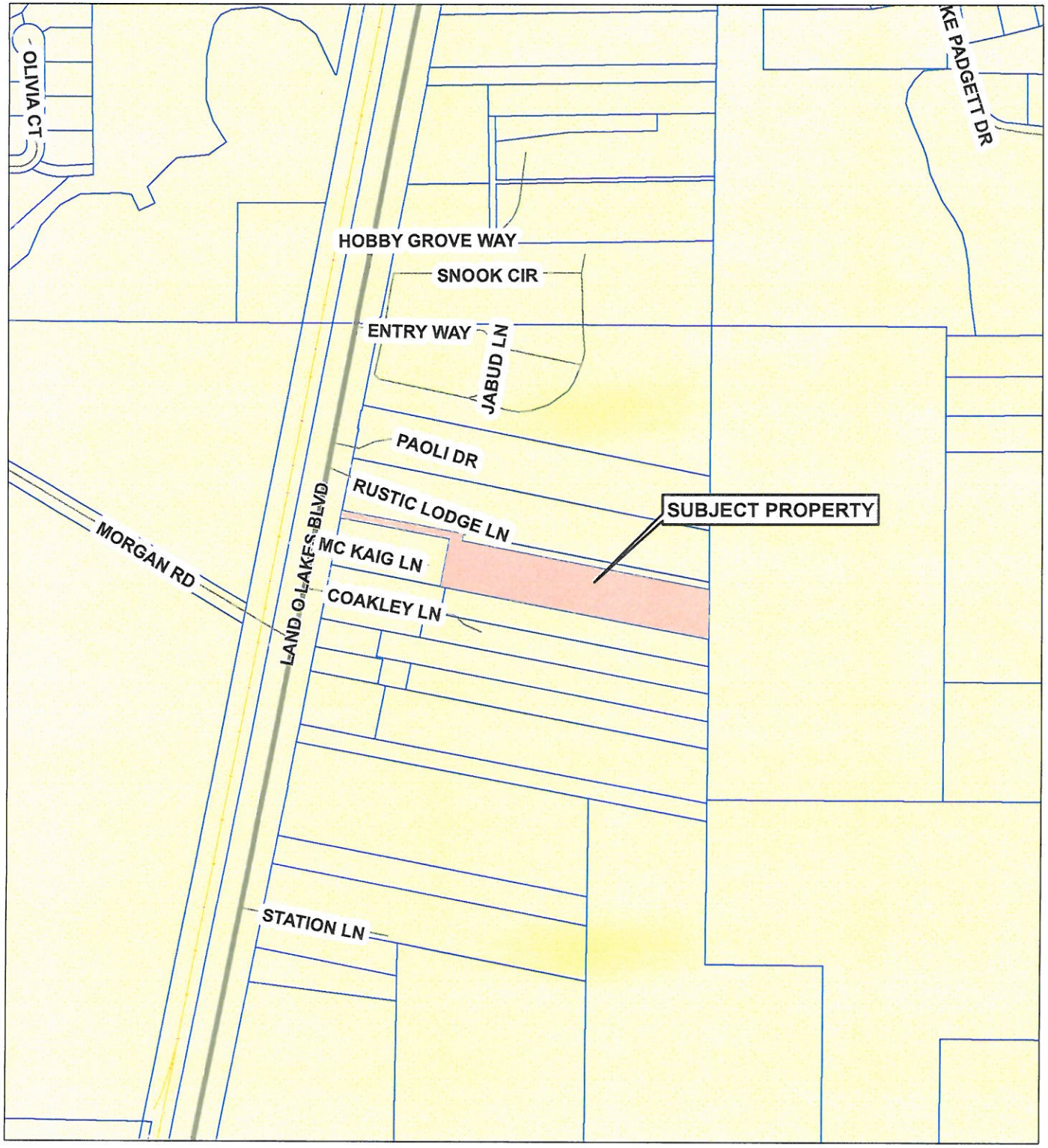

SML15-021
Recreation Alternative

25 26 18 0000 01900 0000

PHYSICAL ADDRESS:
N/A

COMMISSION DISTRICT: 2

SUBJECT PROPERTY

0 400 800
Feet

Pasco County GIS | 6/30/2015 | jledbetter

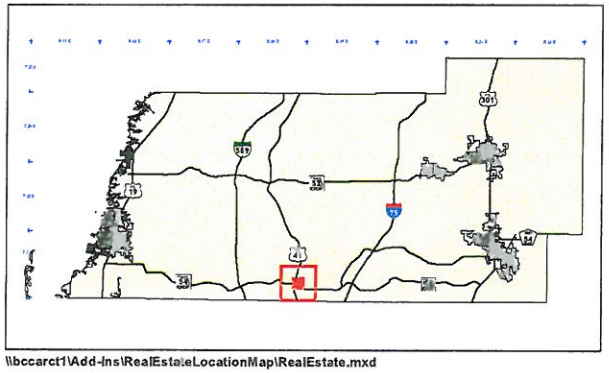

\\bccarct1\Add-Ins\RealEstateLocationMap\RealEstate.mxd

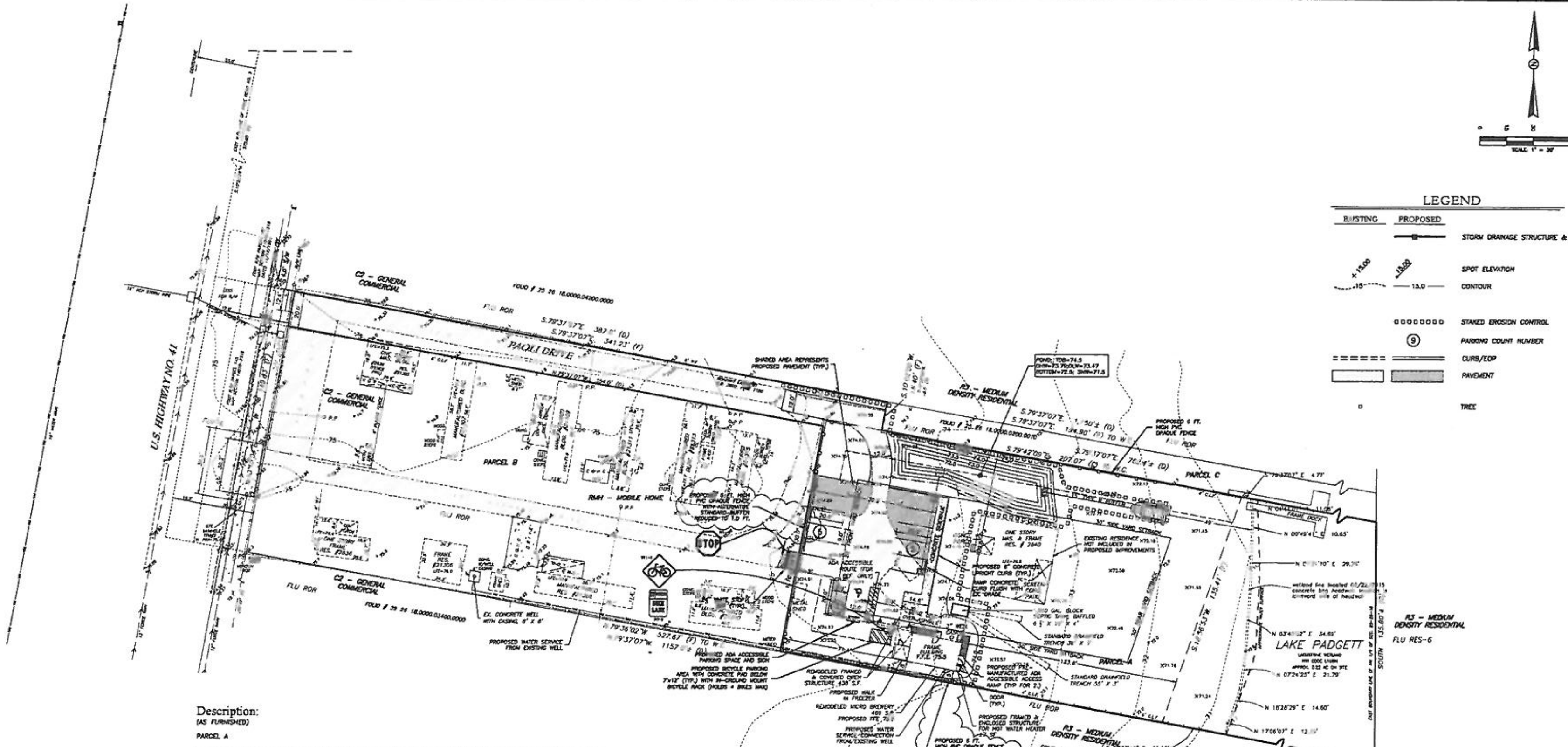

Description:
(AS FURNISHED)

PARCEL A

LEGAL DESCRIPTION: A PORTION OF THE NORTHWEST 1/4 OF SECTION 25, TOWNSHIP 26 SOUTH, RANGE 18 EAST, PASCO COUNTY, FLORIDA, MORE FULLY DESCRIBED AS FOLLOWS:

COMMENCE AT THE INTERSECTION OF THE EASTERLY RIGHT OF WAY LINE OF STATE ROAD NO. 5 (NOW KNOW AS U.S. HIGHWAY NO. 41) AND THE NORTH BOUNDARY LINE OF SAID NORTHWEST 1/4 OF SECTION 25, SAID POINT BEING 33.0 FEET AT RIGHT ANGLES TO THE CENTERLINE OF STATE ROAD NO. 5 (NOW KNOWN AS U.S. HIGHWAY NO. 41); THENCE S.10°22'58"W., 33.0 FEET FROM AND PARALLEL TO THE CENTERLINE OF U.S. HIGHWAY NO. 41, A DISTANCE OF 575.0 FEET TO THE POINT OF BEGINNING; THENCE S.79°37'07"E., A DISTANCE OF 387.0 FEET; THENCE S.10°22'58"W., A DISTANCE OF 16.5 FEET; THENCE S.79°37'07"E., A DISTANCE OF 762.4 FEET MORE OR LESS TO THE EAST BOUNDARY LINE OF SAID NORTHWEST 1/4 OF SECTION 25; THENCE SOUTH, ALONG THE EAST BOUNDARY LINE OF SAID NORTHWEST 1/4, A DISTANCE OF 135.80 FEET MORE OR LESS; THENCE N.79°37'07"W., A DISTANCE OF 820.0 FEET MORE OR LESS; THENCE N.10°22'58"E., A DISTANCE OF 130.0 FEET; THENCE N.79°37'07"W., A DISTANCE OF 354.0 FEET; THENCE N.10°22'58"E., A DISTANCE OF 20.0 FEET TO THE POINT OF BEGINNING. LESS THE WESTERLY 17.0 FEET THEREOF FOR ADDITIONAL RIGHT OF WAY.

TOGETHER WITH NON-EXCLUSIVE EASEMENT FOR INGRESS AND EGRESS AS ROADWAY EASEMENT AGREEMENT RECORDED IN OFFICIAL RECORDS BOOK 3602, PAGE 1150.

PARCEL B

A PORTION OF THE NORTHWEST 1/4 OF SECTION 25, TOWNSHIP 26 SOUTH, RANGE 18 EAST, PASCO COUNTY, FLORIDA, MORE FULLY DESCRIBED AS FOLLOWS:

COMMENCE AT THE INTERSECTION OF THE EASTERLY RIGHT OF WAY LINE OF STATE ROAD NO. 5 (NOW KNOW AS U.S. HIGHWAY NO. 41) AND THE NORTH BOUNDARY LINE OF SAID NORTHWEST 1/4 OF SECTION 25, SAID POINT BEING 33.0 FEET AT RIGHT ANGLES TO THE CENTERLINE OF STATE ROAD NO. 5 (NOW KNOWN AS U.S. HIGHWAY NO. 41); THENCE S.10°22'58"W. 33.0 FEET FROM AND PARALLEL TO THE CENTERLINE OF U.S. HIGHWAY NO. 41, A DISTANCE OF 595.0 FEET TO THE POINT OF BEGINNING; THENCE S.79°37'07"E., A DISTANCE OF 354.0 FEET; THENCE S.10°22'58"W., A DISTANCE OF 130.0 FEET; THENCE N.79°37'07"W., A DISTANCE OF 354.0 FEET; THENCE N.10°22'58"E., A DISTANCE OF 130.0 FEET TO THE POINT OF BEGINNING. LESS THE WESTERLY 17.0 FEET THEREOF FOR ADDITIONAL RIGHT OF WAY.

PARCEL C

LEGAL DESCRIPTION: A PORTION OF THE NORTHWEST 1/4 OF SECTION 25, TOWNSHIP 26 SOUTH, RANGE 18 EAST, PASCO COUNTY, FLORIDA, MORE FULLY DESCRIBED AS FOLLOWS:

COMMENCE AT THE INTERSECTION OF THE EASTERLY RIGHT OF WAY LINE OF STATE ROAD NO. 5 (NOW KNOWN AS U.S. HIGHWAY NO. 41) AND THE NORTH BOUNDARY LINE OF SAID NORTHWEST 1/4 OF SECTION 25, SAID POINT BEING 33.0 FEET AT RIGHT ANGLES TO THE CENTERLINE OF STATE ROAD NO. 5 (NOW KNOWN AS U.S. HIGHWAY NO. 41); THENCE S.10°22'58"W., 33.0 FEET FROM AND PARALLEL TO THE CENTERLINE OF OF U.S. HIGHWAY NO. 41, A DISTANCE OF 575.0 FEET TO THE POINT OF BEGINNING; THENCE S.79°37'07"E., A DISTANCE OF 1,150 FEET, MORE OR LESS, TO A LINE IN THE MIDDLE SECTION, WHICH POINT IS IN LAKE PADGETT; THENCE SOUTH, WITH SAID LINE, 20 FEET; THENCE N.79°37'07"W., 1,150 FEET, MORE OF LESS, TO THE RIGHT OF WAY OF STATE ROAD NO. 5; THENCE NORTH, WITH SAID RIGHT OF WAY 15.0 FEET TO THE POINT OF BEGINNING. LESS ROAD RIGHT OF WAY AND LESS THE FOLLOWING LEGAL DESCRIPTION:

A PORTION OF THE NORTHWEST 1/4 OF SECTION 25; TOWNSHIP 26 SOUTH, RNAGE 18 EAST, PASCO COUNTY, FLORIDA, MORE FULLY DESCRIBED AS FOLLOWS:

COMMENCE AT THE INTERSECTION OF THE EASTERLY RIGHT OF WAY LINE OF STATE ROAD NO. 5 (NOW KNOWN AS U.S. HIGHWAY NO. 41) AND THE NORTH BOUNDARY LINE OF SAID NORTHWEST 1/4 OF SECTION 25, SAID POINT BEING 33.0 FEET AT RIGHT ANGLES TO THE CENTERLINE OF STATE ROAD NO. 5 (NOW KNOWN AS U.S. HIGHWAY NO. 41); THENCE S.10°22'58"W., 33.0 FEET FROM AND PARALLEL TO THE CENTERLINE OF U.S. HIGHWAY NO. 41, A DISTANCE OF 575.0 FEET TO THE POINT OF BEGINNING; THENCE S.79°37'07"E., A DISTANCE OF 387.0 FEET; THENCE S.10°22'58"W., A DISTANCE OF 16.5 FEET; THENCE S.79°37'07"E., A DISTANCE OF 762.4 FEET MORE OR LESS TO THE EAST BOUNDARY LINE OF SAID NORTHWEST 1/4 OF SECTION 25; THENCE SOUTH ALONG THE EAST BOUNDARY LINE OF SAID NORTHWEST 1/4, A DISTANCE OF 135.80 FEET MORE OR LESS; THENCE N.79°37'07"W., A DISTANCE OF 820.0 FEET MORE OR LESS; THENCE N.10°22'58"E., A DISTANCE OF 130.0 FEET; THENCE N.79°37'07"W., A DISTANCE OF 354.0 FEET; THENCE N.10°22'58"E., A DISTANCE OF 20.0 FEET TO THE POINT OF BEGINNING. LESS THE WESTERLY 17.0 FEET THEREOF FOR ADDITIONAL RIGHT OF WAY.

TOGETHER WITH NON-EXCLUSIVE EASEMENT FOR INGRESS AND EGRESS AS REV. ROADWAY EASEMENT AGREEMENT RECORDED IN OFFICIAL RECORDS BOOK 3602, PAGE 1150.

SITE DATA

TOTAL SITE AREA	104195 SF/	2.39 ACRES
PROJECT SITE AREA	20473 SF/	0.47 ACRES
EXISTING IMPERVIOUS AREA	1742 SF/	0.04 ACRES
PROPOSED IMPERVIOUS AREA	3920 SF/	0.09 ACRES
EXISTING "GREEN" AREA	18731 SF/	0.43 ACRES
PROPOSED "GREEN" AREA	14370 SF/	0.33 ACRES
ONSITE WETLANDS AREA	9512 SF/	0.22 ACRES
TOTAL WATER BODIES AREA	11695 SF/	0.27 ACRES
CONSERVATION LANDS AREA	0 SF/	0.00 ACRES
DEVELOPABLE AREA	74210 SF/	1.70 ACRES
BUILDING HEIGHT	12'-3"	
FLOOR AREA RATIO (FAR)	TOTAL BUILDING AREA (SF)/43,560 SF/DEVELOPABLE ACREAGE 906 SF/20,473 SF) = 0.044	
FUTURE LAND USE (FLU)	RETAIL/OFFICE/RESIDENTIAL (ROR)	
PARKING REQUIRED	MICRO-BREWERY – 1/75 S.F. OF GFA (906 S.F.) = 12 TOTAL SPACES	
TOTAL PARKING PROVIDED	12 SPACES	
STANDARD PARKING REQUIRED	11	
STANDARD PARKING PROVIDED	11 SPACES	
COMPACT PARKING REQUIRED	0	
COMPACT PARKING PROVIDED	0	
H/C PARKING REQUIRED	1 SPACE	
H/C PARKING PROVIDED	1 SPACE	
BICYCLE PARKING REQUIRED	1	
BICYCLE PARKING PROVIDED	4	
POTABLE WATER	EXISTING WELL	
SANITARY SEWER	EXISTING SEPTIC	
FIRE PROTECTION	PASCO COUNTY FIRE RESCUE, FIRE HYDRANTS	
REFUSE COLLECTION	DUMPSTER PICK-UP	
CURRENT ZONING	C-2	
LAND USE	GENERAL COMMERCIAL	
PARCEL ID	NO. 25-26-18-0000-01900-0000	
REZONING	RZ-7069 APPROVED 2/11/14 CU14-06 APPROVED 2/11/14 R-3 TO C-2	

GENERAL NOTES

1. REFERENCED INDEX NUMBERS REFER TO DETAILS DEPICTED IN THE F.D.O.T. ROADWAY AND TRAFFIC DESIGN STANDARDS.
2. UNLESS OTHERWISE NOTED, ALL MATERIALS AND WORKMANSHIP SHALL CONFORM TO FLORIDA DEPARTMENT OF TRANSPORTATION "STANDARD SPECIFICATIONS FOR ROAD AND BRIDGE CONSTRUCTION", LATEST EDITION.
3. IT SHALL BE THE CONTRACTOR'S RESPONSIBILITY TO PROVIDE MAINTENANCE OF TRAFFIC AND PEDESTRIAN CONTROL PER APPROPRIATE FDOT SPECIFICATIONS; SEE FDOT INDEX# 600 THROUGH 660.
4. ALL DIMENSIONS ARE TO OUTSIDE WALL OF BUILDING AND FRONT FACE OF CURB UNLESS OTHERWISE NOTED.
5. THE 5' WIDE INTERNAL TO EXTERNAL SIDEWALK CONNECTION IS TO BE ADA COMPLIANT.
6. FLORIDA STATE STATUTE 316.0745 REQUIRES THAT ALL TRAFFIC CONTROL SIGNING AND MARKINGS ON PRIVATE PROPERTY OPENED TO THE GENERAL PUBLIC BE IN CONFORMANCE WITH THE MANUAL ON UNIFORM TRAFFIC CONTROL DEVICES AND FLORIDA DEPARTMENT OF TRANSPORTATION STANDARDS.
7. ALL PARKING SPACES SHALL BE STRIPED IN WHITE.
8. ALL HANDICAPPED PARKING SPACES SHALL BE SIGNED AND MARKED IN ACCORDANCE WITH FLORIDA DEPARTMENT OF TRANSPORTATION STANDARDS INDEX.
9. IF THE SITE HAS ANY INTERNAL ROADS THAT ARE TO BE NAMED, STREET NAME SIGNS WILL BE REQUIRED PER THE FOLLOWING STANDARDS. STREET NAME SIGNS SHALL BE 9-INCH ON ALL ROAD CLASSIFICATIONS. ALL SIGNS SHALL HAVE 6-INCH SERIES B LETTERS. ALL STREET NAME SIGNS ON PRIVATE ROADS SHALL BE STANDARD D3 STREET NAME SIGNS WITH THE COLORS REVERSED; WHITE BACKGROUND WITH GREEN LETTERS AND BORDER. AT INTERSECTIONS WITH COUNTY OR STATE MAINTAINED ROADS; THE COUNTY OR STATE MAINTAINED ROAD SHALL BE GREEN BACKGROUND WITH WHITE LETTERS AND BORDER.
10. FOR IMPROVEMENTS WITHIN THE COUNTY RIGHT-OF-WAY WITH TRAFFIC CONTROL DEVICES.

    THE SUBMITTAL DATA FORM SHALL BE SUBMITTED FOR APPROVAL PRIOR TO INSTALLATION OF ANY TRAFFIC CONTROL DEVICES IN THE COUNTY RIGHT-OF-WAY.
11. ANY LIGHTING USED TO ILLUMINATE ANY PARKING AREA SHALL BE SO ARRANGED AS TO DIRECT AND/OR SHIELD LIGHT AWAY FROM ADJOINING RESIDENTIAL PREMISES AND RIGHT-OF-WAY.
12. NO TRUCKS ARE ARE PROPOSED TO BE LOADING AND/OR UNLOADING ON THE SITE FOR DELIVERIES.

PASCO COUNTY NOTES

1. IF DURING CONSTRUCTION ACTIVITIES ANY EVIDENCE OF HISTORIC RESOURCES, INCLUDING BUT NOT LIMITED TO ABORIGINAL OR HISTORIC POTTERY, PREHISTORIC STONE TOOLS, BONE OR SHELL TOOLS, HISTORIC TRASH PITS, OR HISTORIC BUILDING FOUNDATION, ARE DISCOVERED, WORK SHALL COME TO AN IMMEDIATE STOP AND THE FLORIDA DEVELOPMENT OF HISTORIC RESOURCES (STATE HISTORIC PRESERVATION OFFICER) AND PASCO COUNTY SHALL BE NOTIFIED WITHIN TWO WORKING DAYS OF THE RESOURCES FOUND ON THE SITE.
2. IF DURING CONSTRUCTION ACTIVITIES ANY EVIDENCE OF THE PRESENCE OF STATE AND FEDERALLY PROTECTED PLANT AND/OR ANIMAL SPECIES IS DISCOVERED, WORK SHALL COME TO AN IMMEDIATE STOP AND PASCO COUNTY SHALL BE NOTIFIED WITHIN TWO WORKING DAYS OF THE PLANT AND/OR ANIMAL SPECIES FOUND ON THE SITE.

FIRE NOTES

1. PER NFPA-1, 18.4.3.1.3 WHERE UNDERGROUND WATER MAINS AND HYDRANTS ARE PROVIDED, THEY SHALL BE INSTALLED, COMPLETED, AND IN SERVICE PRIOR TO CONSTRUCTION WORK.
2. FIRE HYDRANTS SHALL BE INSTALLED AND IN SERVICE PRIOR TO THE ACCUMULATION OF COMBUSTIBLES.
3. NO BURNING SHALL BE ALLOWED ON-SITE.
4. ALL PROJECTS MUST COMPLY WITH PASCO COUNTY FIRE HYDRANT ORDINANCE NO. 46-51.
5. PER NFPA-1, 18.3.4.1- CLEARANCES OF 7½ FEET IN FRONT OF AND TO THE SIDES OF THE FIRE HYDRANT WITH A FOUR-FOOT CLEARANCE TO THE REAR MUST BE MAINTAINED AT ALL TIMES.
6. GATED ENTRIES REQUIRE A SIREN OPERATING SYSTEM OR A 3M OPTICOM SYSTEM FOR EMERGENCY ACCESS.
7. THERE ARE NO FIRE HYDRANTS LOCATED ON-SITE OR CLOSE TO THE SITE ENTRANCE ALONG U.S. HIGHWAY 41 TO SERVE THE SITE IN CASE OF FIRE. PROPERTY OWNER WILL MOUNT FIRE EXTINGUISHERS ON THE OUTSIDE OF THE BUILDING EVERY 75 FT. MIN. FOR FIRE PROTECTION AS PER PREVIOUS DISCUSSION WITH COUNTY.

PROJECT IS LOCATED IN FLOOD ZONE X ACCORDING TO FEMA F.I.R.M. COMMUNITY PANEL NO: 12101C0404F DATED 09/26/14

Elevations based on The National Geodetic Vertical Datum of 1929 (NVGD 29)

NO.	DATE	REVISION

Heather E. Wertz, PE
License # 54691
July 17, 2015

SANDOVAL | BURBANK
JOB #: 03177.0001
26S/18E
DATE: 01/09/2015

SHEET TITLE: PRELIMINARY SITE PLAN

RECREATION ALTERNATIVE, LLC.
2840 LAND O' LAKES BLVD.
PASCO COUNTY, FLORIDA

HAMILTON
ENGINEERING & SURVEYING INC
3409 W. Lemon Street
TAMPA, FL 33609
LB #7013 CA #8474
TEL (813) 250-3535
FAX (813) 250-3636

4

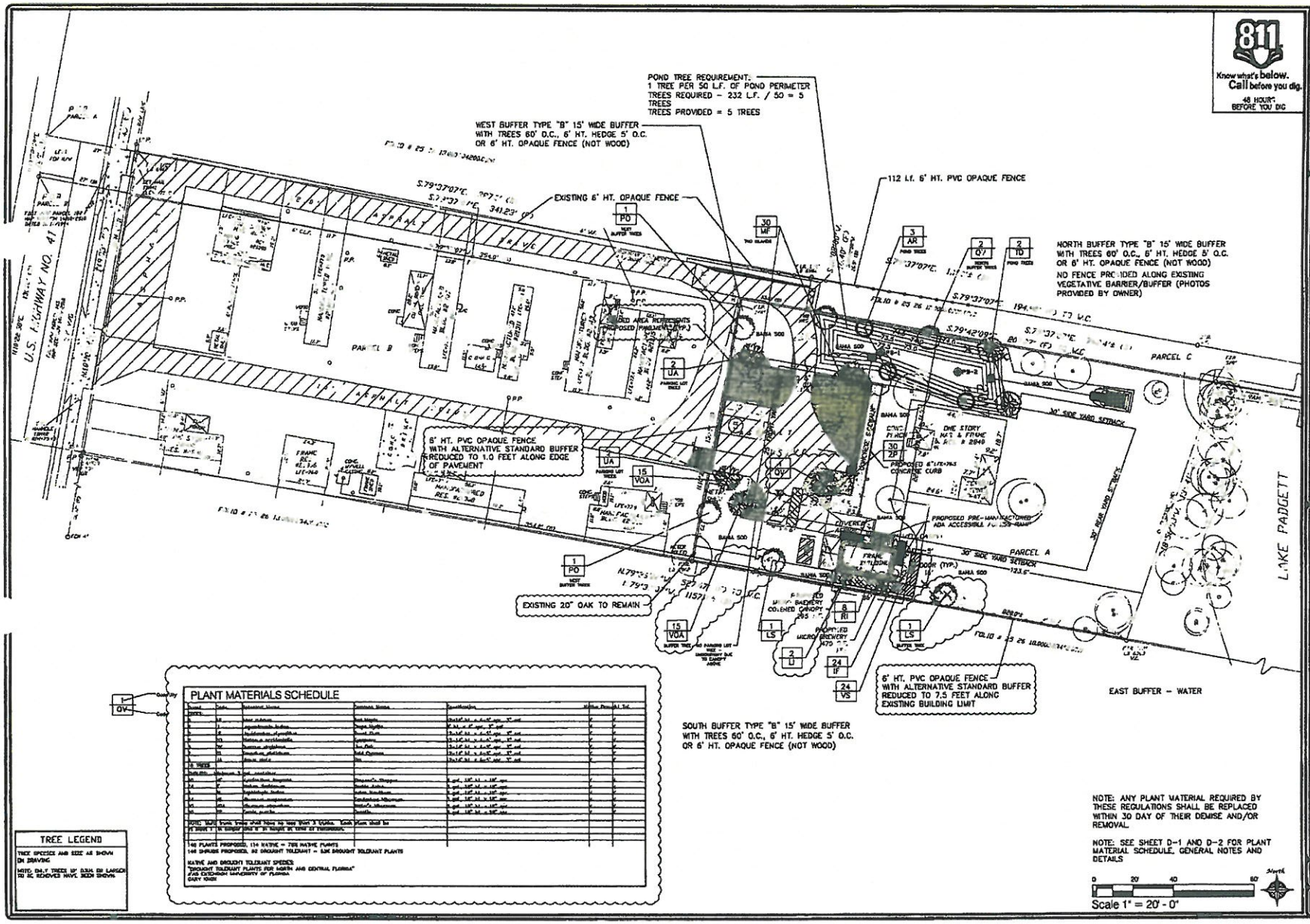
811
Know what's below.
Call before you dig.
48 HOURS BEFORE YOU DIG
POND TREE REQUIREMENT:
1 TREE PER 50 L.F. OF POND PERIMETER
TREES REQUIRED - 232 L.F. / 50 = 5 TREES
TREES PROVIDED = 5 TREES
WEST BUFFER TYPE "B" 15' WIDE BUFFER WITH TREES 60' O.C., 6' HT. HEDGE 5' O.C. OR 6' HT. OPAQUE FENCE (NOT WOOD)
EXISTING 6' HT. OPAQUE FENCE
112 L.f. 6' HT. PVC OPAQUE FENCE
NORTH BUFFER TYPE "B" 15' WIDE BUFFER WITH TREES 60' O.C., 6' HT. HEDGE 5' O.C. OR 6' HT. OPAQUE FENCE (NOT WOOD)
NO FENCE PROVIDED ALONG EXISTING VEGETATIVE BARRIER/BUFFER (PHOTOS PROVIDED BY OWNER)
U.S. HIGHWAY NO. 41
PARCEL B
PARCEL C
PARCEL A
30' SIDE YARD SETBACK
30' REAR YARD SETBACK
LAKE PADGETT
6' HT. PVC OPAQUE FENCE WITH ALTERNATIVE STANDARD BUFFER REDUCED TO 1.0 FEET ALONG EDGE OF PAVEMENT
EXISTING 20" OAK TO REMAIN
6' HT. PVC OPAQUE FENCE WITH ALTERNATIVE STANDARD BUFFER REDUCED TO 7.5 FEET ALONG EXISTING BUILDING LIMIT
EAST BUFFER - WATER
SOUTH BUFFER TYPE "B" 15' WIDE BUFFER WITH TREES 60' O.C., 6' HT. HEDGE 5' O.C. OR 6' HT. OPAQUE FENCE (NOT WOOD)
PROPOSED PRE-MANUFACTURED ADA ACCESSIBLE
PROPOSED 6"LTE-7965 CONCRETE CURB
ONE STORY NAT & FRAME
PROPOSED MICRO BREWERY
COVERED ENTRANCE
DOOR (TYP.)
BAHIA SOD
PARKING LOT TREES
NORTH BUFFER TREES
POND TREES
WEST BUFFER TREES
BUFFER TREES
1 PO
30 MF
3 AR
2 OV
2 ID
2 UA
15 VOA
1 OV
30 ZP
8 RI
1 LS
2 U
24 IF
24 VS
TREE LEGEND
TREE SPECIES AND SIZE AS SHOWN ON DRAWING
NOTE: 8H.Y TREES 18" DBH OR LARGER TO BE REMOVED HAVE BEEN SHOWN
PLANT MATERIALS SCHEDULE
46 PLANTS PROPOSED, 114 NATIVE = 78% NATIVE PLANTS
146 SHRUBS PROPOSED, 92 DROUGHT TOLERANT = 63% DROUGHT TOLERANT PLANTS
NATIVE AND DROUGHT TOLERANT SPECIES:
"DROUGHT TOLERANT PLANTS FOR NORTH AND CENTRAL FLORIDA"
JAMES CUTHCHON UNIVERSITY OF FLORIDA
GARY KNOX
NOTE: ANY PLANT MATERIAL REQUIRED BY THESE REGULATIONS SHALL BE REPLACED WITHIN 30 DAY OF THEIR DEMISE AND/OR REMOVAL.
NOTE: SEE SHEET D-1 AND D-2 FOR PLANT MATERIAL SCHEDULE, GENERAL NOTES AND DETAILS
0 20' 40' 80'
Scale 1" = 20' - 0"
North
Landscape Development Plan
RECREATION ALTERNATIVE
23940 Land O' Lakes Boulevard, Pasco County, Florida
CDA
COPLEY DESIGN ASSOCIATES, INC.
LANDSCAPE ARCHITECTURE · SITE PLANNING
JOB NO. 14029
SHEET
L - 1

ATTACHMENT NO. 4 - BACKGROUND AND FINDINGS OF FACT
RECREATION ALTERNATIVE

BACKGROUND:

1. On February 11, 2014, the Board of County Commissions approved a rezoning request from an R-3 Medium Density residential District to a C-2 General Commercial District, Petition No. 7089.

2. On February 11, 2014, the Board of County Commissions approved a Conditional Use Application No. Cu14-06 with conditions.

FINDINGS OF FACT:

1. Presently, the subject site contains a frame building, carport and covered concrete structure with a single family house which is not part of the project.

2. The Preliminary Site/Construction Plans and Stormwater Management Plan and Report with Alternative Standards has been reviewed by the Planning and Development Department, and it has been determined that the proposed use is consistent with the above-referenced zoning district's permitted uses and with the Pasco County applicable provisions of the Comprehensive Plan, as submitted.

3. The Preliminary Site/Construction Plans and Stormwater Management Plan and Report with Alternative Standards for the above-subject project were prepared for Jonathan Ash by Hamilton Engineering & Surveying, Inc. and consist of 13 sheets dated January 9, 2015; the sheets were last revised on August 4, 2015. The plans were originally received by the Planning and Development Department on February 19, 2015, and final revisions were received on August 7, 2015.

4. A Timing and Phasing Application was submitted and found to be exempt from the requirement to provide Timing and Phasing Analysis and a Substandard Roadway Analysis.

The Planning and Development Department's approval of this constitutes a finding by the Planning and Development Department that the Preliminary Site/Construction Plans and Stormwater Management Plan and Report with Alternative Standards, as conditioned, are consistent with those Goals, Objectives, and Policies of the Comprehensive Plan and those provisions of the LDC that are applicable to approvals. This action is based on the office review of the plans, supporting documentation, and certifications of the Engineer of Record.

INITIAL CERTIFICATE OF CAPACITY

REQUIRED FOR PRELIMINARY SITE PLANS, PRELIMINARY DEVELOPMENT PLANS, NONRESIDENTIAL SUBDIVISION, RESIDENTIAL SUBDIVISION INTO MORE THAN ONE DWELLING UNIT PER LOT, AND PUBLIC SCHOOL COMPREHENSIVE PLAN CONSISTENCY REVIEW
To Be Completed By Department Responsible for Approval Sought;
Completed Certificate Must Be Attached to the Agenda Item and Approval Document

Complete Application (Date):	2/23/15	Certificate Completed by:	PJB
Parcel ID No(s):	25-26-18-0000-01900-0000		(attach survey if project includes portion of parcel)
Project Name:	Recreation Alternative	No:	SML15-021
Applicant Name, Address, and Telephone Number:	Jonathan Ash c/o Meghan Burbank, Hamiton Engineering, 3409 W Lemon St, Tampa, FL 33609 (813) 250-3535		
Job Site Address:	Land O' Lakes Blvd, East side (2840 Land O' Lakes Blvd)		

Does the applicant want to opt out of the mobility fee system pursuant to LDC 1302? ☐Yes ☐ No (If Yes, then transportation concurrency will apply and TIS application is required.)

Project subject to Development of Regional Impact (DRI) Development Order or to a Development Agreement? ☐Yes ☐ No

Approval Sought (Check All that apply):

☐	Preliminary Development Plan	☐	Nonresidential Subdivision
☒	Preliminary Site Plan	☐	Residential Subdivision into more than one dwelling unit
		☐	Public School (Comprehensive Plan Consistency Review)

TYPE OF DEVELOPMENT

Number of Units	Unit Measure	Description
913	sq. ft.	Microbrewery

Expiration (1300 LDC)		
All facilities (other than roads and schools) expire on:	8/10/2021	(6 yrs from issuance)
Roads(Only applies if project subject to transportation concurrency) Certificate of Capacity expires or is subject to additional review on: (click N/A if transportation concurrency does not apply)		or N/A ☒
Schools: Certificate of Capacity expires or is subject to additional review on:		or N/A ☒
Issuance Date: 8/10/2015		

Completed Certificate of Capacity which has been issued to be distributed as follows:
1) Applicant 2) Shared Directory: 1-LOS, and 3) Project File.

Revised 9-20-13

INITIAL CERTIFICATE OF CAPACITY

	Yes	No	Conditional Approval	Review Standards	Reviewed By & Authorized Signature/Date
Roads ☒ N/A	☐	☐	☐	LDC 1301.6.D and Chapter 7 Transportation Analysis	
Water/Water Supply (Utilities) or ☐	☐	☐	☒	LDC 1301.6.A and Chapter 10 Public Facilities Element	Mike Kirkpatrick 02/26/15
Sewer (Utilities) or ☐	☐	☐	☒	LDC 1301.6.A and Chapter 10 Public Facilities Element	Mike Kirkpatrick 02/26/15
Parks/Recreation(Parks) ☐ N/A	☐	☐	☐	LDC 1301.6.B and Chapter 5 Recreation and Open Space Element	
Solid Waste (Utilities) Or ☐	☐	☐	☒	LDC 1301.6.A and Chapter 10 Public Facilities Element	Mike Kirkpatrick 02/26/15
School or ☒ N/A	☐	☐	☐	LDC 1301.6.C & Chapter 8 Public School Facilities Element and School District Concurrency Implementation Procedures Manual	

[Type or Copy and Paste Below]

Recreation Alternative Parcel ID # 25-26-18-0000-01900-0000 PCU# 15-103.01

Conditions of Approval for Water:

Pasco County Utilities has reviewed the referenced parcel and has determined that this parcel is within the existing area where water services are provided by Pasco County Utilities. A Service Connection Application, per County codes and ordinances, for water service to this property must be submitted and will be subject to the following conditions:

The provision water service is contingent upon the County obtaining adequate water supply from Tampa Bay Water; receiving all the necessary permits and approvals to implement and construct the County's planned system improvements and facility expansions needed to serve the development; and the Developer's, and its successors or assigns, compliance with the conditions of Pasco County Code Chapters 46 and 110, (including but not limited to the obligation to execute and implement, as applicable, a Utilities Service Agreement and a Utilities Service Plan, both acceptable to the County, and the payment of water impact fees).

Conditions of Approval for Wastewater:

Pasco County Utilities has reviewed the referenced parcel and has determined that this parcel is within the existing area where wastewater services are provided by Pasco County Utilities. A Service Connection Application, per County codes and ordinances, for wastewater service to this property must be submitted and will be subject to the following conditions:

Completed Certificate of Capacity which has been issued to be distributed as follows:
1) Applicant 2) Shared Directory: 1-LOS, and 3) Project File.

Revised 9-20-13

The provision wastewater service is contingent upon the County receiving all the necessary permits and approvals to implement and construct the County's planned system improvements and facility expansions needed to serve the development; and the Developer's, and its successors or assigns, compliance with the conditions of Pasco County Code Chapter 110, (including but not limited to the obligation to execute and implement, as applicable, a Utilities Service Agreement and a Utilities Service Plan, both acceptable to the County, and the payment of wastewater impact fees).

Conditions of Approval for Solid Waste:

Pasco County Utilities has reviewed the referenced parcel and has determined that this parcel is within the existing area where solid waste services are provided by Pasco County Utilities. The provision of solid waste service is contingent upon the County receiving all the necessary permits and approvals to implement and construct the County's planned disposal system improvements and facility expansions needed to serve the development; and the Developer's, and its successors or assigns, compliance with the conditions of Pasco County Code Chapter 90 and other applicable regulatory requirements.

Completed Certificate of Capacity which has been issued to be distributed as follows:
1) Applicant 2) Shared Directory: 1-LOS, and 3) Project File.

Revised 9-20-13

PERMIT SET	X
RELEASED FOR CONSTRUCTION	

Final Approved Plan 8-10-15
PDD15-1488 PSPCSW

SML15-021

CONSTRUCTION PLANS
FOR:
RECREATION ALTERNATIVE, LLC.

VICINITY MAP
NTS

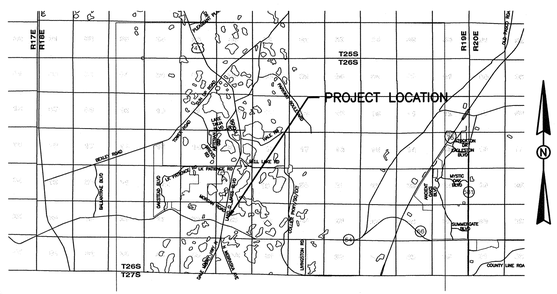

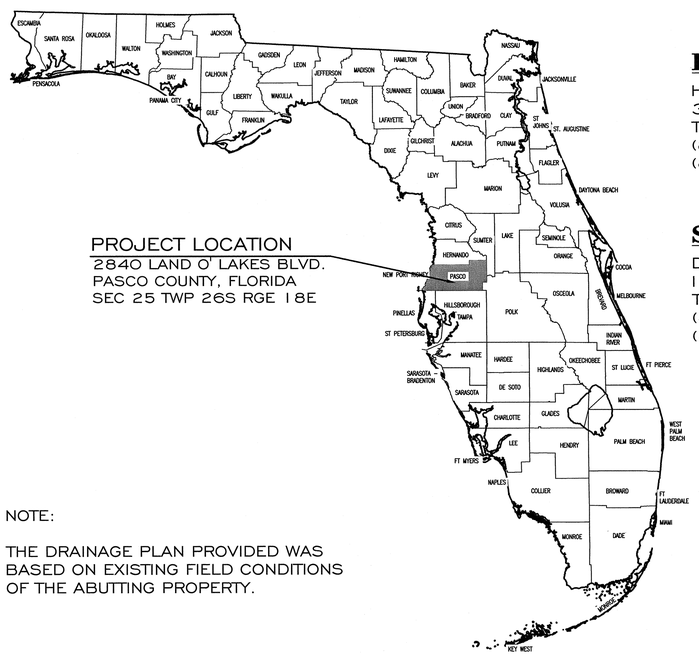

PROJECT LOCATION
2840 LAND O' LAKES BLVD.
PASCO COUNTY, FLORIDA
SEC 25 TWP 26S RGE 18E

NOTE:

THE DRAINAGE PLAN PROVIDED WAS BASED ON EXISTING FIELD CONDITIONS OF THE ABUTTING PROPERTY.

HAMILTON
ENGINEERING & SURVEYING, INC.

3409 W. LEMON STREET
TAMPA, FL 33609

LB #7013 CA #8474

TEL (813) 250-3535
FAX (813) 250-3636

ENGINEER

HAMILTON ENGINEERING & SURVEYING, INC.
3409 W. LEMON STREET
TAMPA, FLORIDA 33609
(813) 250-3535
(813) 250-3636 (FAX)

OWNER/DEVELOPER

RECREATION ALTERNATIVE, LLC.
2840 LAND O LAKES BLVD.
LAND O LAKES, FL 34639
(813) 477-4205

SURVEYOR

DAVID L. SMITH
1406 W. LINEBAUGH AVE.
TAMPA, FLORIDA 33612
(813) 935-1960
(813) 933-9446 (FAX)

ARCHITECT

CORNERSTONE DESIGN SERVICES
708 LITHIA PINECREST RD.
VALRICO, FLORIDA 33596
(727) 692-6401 (CELL)
(813) 643-6671 (FAX)

REQUIRED PERMITS	SUBMITTED	PERMIT GRANTED	PERMIT NUMBER	EXPIRATION
S.W.F.W.M.D ENVIRONMENTAL RESOURCE PERMIT	5/13/2015			
COUNTY XXXXX CONSTRUCTION PLAN APPROVAL				

REVISIONS

DATE	SHEET NOS.	BY
5/13/2015	ALL SHEETS	HEW
6/15/2015	1,3,4,5 & 8	HEW
6/26/2015	1, 4,5,9	HEW
7/16/2015	1,4, L-1	HEW

DRAWING INDEX

1	COVER SHEET
2	GENERAL CONSTRUCTION NOTES
3	EXISTING SITE CONDITIONS & DEMOLITION PLAN
4	PRELIMINARY SITE PLAN
5	GRADING AND DRAINAGE PLAN
6	TYPICAL SITE DETAILS
7	TYPICAL SITE & DRAINAGE DETAILS
8	CONTROL STRUCTURE DETAILS
9	TYPICAL CROSS SECTIONS
1 OF 1	CONSTRUCTION SURFACE WATER MANAGEMENT PLAN
L-1	LANDSCAPE DEVELOPMENT PLAN
IR-1	IRRIGATION DEVELOPMENT PLAN
D-1	GENERAL NOTES AND DETAILS
D-2	GENERAL NOTES AND DETAILS

HEATHER WERTZ PE
LICENSE NO. 54697
STATE OF FLORIDA
PROFESSIONAL ENGINEER
HAMILTON ENGINEERING & SURVEYING, INC.
CERTIFICATE OF AUTHORIZATION NO. 7013
NOT VALID WITHOUT THE SIGNATURE AND ORIGINAL RAISED SEAL OF A FLORIDA LICENSED ENGINEER

RECREATION ALTERNATIVE, LLC.
JOB NO. 03177.0001

J:\3001 To 3500\03177 Recreation Alternatives LLC\0001- 2840 Land O Lakes Blvd\ENGR\1 DWGs\ConstructionGI-001.dwg (COVER) meghanb Aug 04, 2015 - 3:35pm

NOTE: THE CONTRACTOR IS RESPONSIBLE FOR ALL SWPPP REQUIREMENTS AS OUTLINED IN THE FOLLOWING STORMWATER POLLUTION PREVENTION PLAN, INCLUDING FILING NOI (NOTICE OF INTENT TO COMMENCE CONSTRUCTION), NOT (NOTICE OF TERMINATION) AND REPORTING.

STORMWATER POLLUTION PREVENTION PLAN

Contained on these plans and within the following notes is a Storm Water Pollution Prevention Plan (SWPPP) which has been developed by Hamilton Engineering and Surveying, Inc. in accordance with the Florida Department of Environmental Protection's (FDEP) "National Pollutant Discharge Elimination System" (NPDES) Generic Permit for Stormwater Discharge from Large and Small Construction Activities.

The following entities are identified as team members of "SWPPP": Hamilton Eng. & Surv., the Developer as identified in the title box of these plans, and the site contractor and his sub-contractors. Each team member has specific responsibilities and obligations. In general, all team members, with regard to their involvement and responsibilities on the project, are to implement all necessary storm water management controls to assure compliance with the NPDES Generic Permit for Storm Water Discharges from Construction Activities, the Southwest Florida Water Management District Permit, the applicable local governing agency (i.e. Hillsborough County, City of Tampa, etc) and the guidelines listed in the SWPPP. The duties and responsibilities of the team members as they pertain to the SWPPP are as follows:

Hamilton Engineering and Surveying, Inc.

A. Develop SWPPP including, but not limited to, retention/detention ponds, control structures, erosion control methods and locations and stabilization criteria. This design is included within these construction plans and the following notes and instructions.

B. Submit and obtain the necessary design related storm water permits from the Florida Department of Environmental Protection, the Southwest Florida Water Management District and other applicable governmental bodies.

Contractor

A. Upon notification by the developer of his intent to commence construction, submit a Notice of Intent to the FDEP on behalf of the developer including SWPPP certification and copy of the permit.

B. Submit to SWFWMD and the operator of the municipal separate storm water system, if applicable, a letter of construction commencement.

C. Complete and submit a Notice of Termination and certification for developer. The NOT's shall be submitted no more than 30 days after
(a) completion of the project and final stabilization of the site or
(b) when responsibility for the site has ended. Final stabilization as defined by EPA is when all soil disturbing activities at the site have been completed and a uniform (e.g. evenly distributed, without large bare areas) perennial vegetative cover with a density of 70% of the native background vegetative cover for the area has been established on all unpaved areas and areas not covered by permanent structures. As an alternative, equivalent permanent stabilization measures (such as riprap, gabions, or geotextiles) may be employed. The client shall notify Hamilton Engineering when one of these criteria has been met.

D. Sign and return to Hamilton a Contractors Certification Form certifying your understanding of and willingness to comply with the Storm Water Pollution Prevention Plan no later than 48 hours prior to commencement of construction. Also, each subcontractor affected by the SWPPP must certify to the contractor that they understand and shall comply with the NPDES permit and SWPPP. A record of these certifications shall be maintained by the contractor on site.

E. During construction, assure compliance with the designed Storm Water Pollution Prevention Plans prepared by Hamilton Engineering and the NPDES Generic Permit for Storm Water Discharges from Large and Small Construction Activities.

F. Maintain a copy of the construction plans, which include the Storm Water Pollution Prevention Plan, the NOI, and all inspection reports and certifications on site.

G. Undertake all reasonable Best Management Practices (BMP's) to assure that silted or otherwise polluted storm water is not allowed to discharge from the site during all phases of construction. Stabilization BMP's that may be used include: temporary or permanent seeding, mulching, geotextiles, sodding, vegetative buffer strips, protection of trees and preservation of mature vegetation. Structural erosion and sediment control BMP's that may be used include: straw bale dikes, silt fences, earth dikes, brush barriers, drainage swales, check dams, subsurface drain, pipe slope drain, level spreaders, storm drain inlet protection, outlet protection, sediment traps, and temporary sediment basins. Detention ponds may also be used as temporary sediment basins. Additional BMP's that may need to be implemented include: providing protected storage areas for chemicals, paints, solvents, fertilizers, and other potentially toxic materials. Providing waste receptacles at convenient locations and providing regular collection of wastes, including building material wastes. Minimizing off-site tracking of sediments. Making adequate preparations, including training and equipment to contain spills of oil and hazardous materials. Complying with applicable state or local waste disposal, sanitary sewer or septic system regulations and the use of appropriate pollution prevention measures for allowable non-storm water components of discharge.

H. Notify Hamilton Engineering and the developer in writing of any non-storm water pollution sources which are being stored, or otherwise used during the construction of the project, e.g., fertilizers, fuels, pesticides, other chemicals. This notification should be accompanied with the contractor's design and methods to prevent pollution run-off from these sources.

I. Develop a maintenance and inspection plan which includes, but is not limited to the following:

A. The specific areas to be inspected and maintained that includes all the disturbed areas and material storage areas of the site.

B. The erosion and sediment controls identified in the SWPPP to be maintained and inspected and those additional controls that the contractor deems necessary.

C. Maintenance procedures.

D. The procedure to follow if additional work is required or whom to call.

E. Inspections and maintenance forms.

F. The personnel assigned to each task.

The following shall be inspected a minimum of once a week or within 24 hours after 0.50 inches of rainfall:

Stabilization measures (once a month if fully stabilized).
◇
Structural controls.
◇
Discharge points.
◇
Construction entrances and exits.
◇
Areas used for storage of exposed materials.
◇

An inspection form shall be completed for each inspection. Any permit violations should be noted and corrective measures shall be taken no later than 7 days after the inspection occurred. If revisions to the SWPPP are needed, a report form for changes in the SWPPP shall be completed and a copy sent to Hamilton Engineering & Surveying, Inc. The original shall be kept on-site as documentation of the change. If the inspection passes, a certification that the facility is in compliance with the SWPPP and the NPDES permit must be signed by a duly authorized representative of the principal executive official of the operator of the SWPPP with one of the following qualifications:

1. Has successfully completed the Florida Stormwater, Erosion and Sediment Control Inspector Training Program.
2. Successfully completed a similar training program.
3. Has enough practical on the job training to be qualified to perform the inspections.

Retain inspection reports and certifications for at least three years.

J. Site stabilization measures shall be initiated as soon as practical but in no case more than 7 days, in portions of the site where construction activities have temporarily or permanently ceased.

K. Releases in Excess of Reportable Quantities.

1. The discharge of hazardous substances or oil in the stormwater discharge(s) from a facility or activity shall be prevented or minimized in accordance with the applicable stormwater pollution prevention plan for the facility or activity. This permit does not relieve the operator of the reporting requirements of 40 CFR part 117 and 40 CFR part 302. Where a release containing a hazardous substance in an amount equal to or in excess of a reporting quantity established under either 40 CFR 117 or 40 CFR 302, occurs during a 24 hour period:

a. The operator is required to notify the State Warning Point (800-210-0519 or 850-413-9911) as soon as he or she has knowledge of the discharge;

b. The operator shall submit within 14 calendar days of knowledge of the release a written description of: the release (including the type and estimate of the amount of material released), the date that such release occurred, the circumstances leading to the release, and remedial steps to be taken, to the Florida Department of Environmental Protection, NPDES Stormwater Section, Mail Station 2500, 2600 Blair Stone Road, Tallahassee, Florida 32399-2400; and

c. The stormwater pollution prevention plan required under Part V of this permit must be modified within 14 calendar days of knowledge of the release to: provide a description of the release, the circumstances leading to the release, and the date of the release. In addition, the plan must be reviewed to identify measures to prevent the reoccurrence of such releases and to respond to such releases, and the plan must be modified where appropriate.

2. This permit does not authorize the discharge of hazardous substances or oil resulting from an on-site spill.

Developer

A. Notify Hamilton of your intent to commence construction. Sign the Notice of Intent form as operator of the storm water discharge facility and permittee and return to the Contractor.

B. Sign a Certification of Storm Water Pollution Prevention Plan and return to the Contractor.

C. Notify the Contractor when it is time to submit a Notice of Termination as defined under Part C of the Contractor section of the SWPPP. Sign and return to the Contractor for submittal to FDEP a Notice of Termination form and certification.

PRE-DEVELOPED SITE INFORMATION:

1. Total site acreage: *2.39 ACRES*
2. Land use: *General Commercial*
3. Vegetation: *Existing grassed areas and trees*
4. Receiving waters or municipal separate storm water system: *LAKE PADGETT*
5. 2 Year/24 Hour rainfall depth: *4.2 inches*
6. Soil types: *ADAMSVILLE FINE SAND*

PROJECT INFORMATION:

1. Project type: *GENERAL COMMERCIAL*
2. Anticipated construction sequence is as follows:
   1. Complete erosion control installation
   2. Clearing and grubbing
   3. Earthwork activities
   4. Storm water system construction
   5. Utility construction
   6. Base and pavement construction
   7. Final stabilization

   The BMP's listed in Part G of the Contractor section of the SWPPP shall be considered during all phases of construction.
3. Anticipated start date: *5/2015*
4. Anticipated completion date: *8/2015*
5. Total acres disturbed: *0.47 ACRES*
6. Pre-developed "C" factor: *0.45*
7. Post-developed "C" factor: *0.65*
8. The storm water management system, upon completion of construction and appropriate certification and as-built submittals will be operated and maintained by *THE PROPERTY OWNER*.
9. The potential source of pollution from this project is on-site development and construction activity.

OWNER'S INSTRUCTIONS FOR MAINTENANCE AND INSPECTION OF STORMWATER FACILITIES

The entire stormwater system should be inspected on at least a semi-annual basis. This should include a visual inspection of the pond, pond banks, bleed-down orifices, other control structures, and discharge pipes. These should be kept free of debris and cleaned on a frequency as required to keep them functional, as designed. Mowing/clearing around the structures may be required to prevent vegetation from clogging them.

Wetland plants, if intentionally installed, should be monitored and maintained as required on the approved construction plans. Areas of littoral shelving, which are required to be vegetated but not intentionally planted, should not be cleared of the wetland plants. These areas should have as high a plant coverage as possible, for maximum water filtration.

Sediment sumps, if designed and installed, should have sediment removed as necessary to allow them to efficiently remove suspended particles. They should be re-dug to the original design specifications, if silted in.

For percolation treatment ponds/swales, the owner of the facility shall inspect the pond bottom periodically after heavy rainfall events to check for persistent ponding or pooling of water. All large debris shall be removed and disposed of elsewhere. If prolonged ponding persists, e.g., in excess of 72 hours, the owner shall rake or scarify the surface. If required, the soil in the area of ponding shall be removed and replaced with clean sandy, non-cohesive soils.

Please check the construction plans to see if written reports on monitoring or plant survival rates are required to be sent to any reviewing agencies. Written notes should always be kept which describe maintenance activities undertaken during each inspection.

Specific conditions of all permits may require additional maintenance activities above and beyond those outlined above. Please be aware of all permit conditions as issued by regulatory agencies to ensure permit compliance.

EROSION CONTROL NOTES

PRIOR TO THE START OF THE CLEARING AND GRUBBING, OR ANY SOIL DISTURBANCE CONTACT PC STORMWATER MANAGEMENT AT (727) 834-3611 FOR A SOIL EROSION AND SEDIMENT CONTROL, PRE-INSPECTION MEETING.

THE EROSION AND TURBIDITY CONTROL MEASURES SHOWN HEREON ARE THE MINIMUM REQUIRED FOR REGULATORY AGENCY PLANS APPROVAL. ADDITIONAL CONTROL AND MEASURES MAY BE REQUIRED DUE TO REGULATORY AGENCY RULES, CONSTRUCTION SEQUENCING AND/OR WEATHER CONDITIONS. ANY ADDITIONAL MEASURES DEEMED NECESSARY BY THE REGULATORY AGENCIES OR BY THE SITE CONTRACTOR BEFORE OR DURING CONSTRUCTION SHALL BE IMPLEMENTED AND MAINTAINED.

THE APPROPRIATE TURBIDITY AND EROSION CONTROL METHODOLOGIES SELECTED BY THE SITE CONTRACTOR FOR THIS PROJECT SHOULD BE MADE FOLLOWING REVIEW OF THE PLANS AND PROJECT SITE SPECIFIC FACTORS AND AFTER CONSULTATIONS AS NEEDED WITH THE PROJECT ENGINEER AND REGULATORY AGENCIES. SEVERAL FACTORS TO CONSIDER ARE DURATION OF CONSTRUCTION ACTIVITIES; DEPTH OF CUT AND SEPARATION DISTANCE FOR PONDS, TRENCHES, AND UTILITY LINES; CLAY CONTENT IN EXCAVATED MATERIALS; FILL HEIGHT RELATIVE TO NATURAL GRADE AND LENGTH AND STEEPNESS OF THE PROPOSED SLOPES; GROUND WATER LEVELS; TIME OF YEAR RELATIVE TO THE RAINY SEASON; PROXIMITY TO WETLANDS, WATER BODIES OR OFFSITE PROPERTIES; EXISTING TOPOGRAPHY AND DIRECTIONS OF SURFACE FLOW.

THE TYPE OF EROSION CONTROL BARRIERS USED SHALL BE GOVERNED BY THE NATURE OF THE CONSTRUCTION OPERATION AND SOIL TYPE THAT WILL BE EXPOSED. SILTY AND CLAYEY MATERIAL MAY REQUIRE SOLID SEDIMENT BARRIERS TO PREVENT TURBID WATER DISCHARGE, WHILE SANDY MATERIAL MAY NEED ONLY SILT SCREENS OR HAY BALES TO PREVENT EROSION. FLOATING TURBIDITY CURTAINS SHOULD GENERALLY BE USED IN OPEN WATER SITUATIONS. DIVERSION DITCHES OR SWALES MAY BE REQUIRED TO PREVENT TURBID STORMWATER RUNOFF FROM BEING DISCHARGED TO WETLANDS OR OTHER WATER BODIES. IT MAY BE NECESSARY TO EMPLOY A COMBINATION OF BARRIERS, DITCHES, AND OTHER EROSION/TURBIDITY CONTROL MEASURES IF CONDITIONS WARRANT.

THE SITE CONTRACTOR IS RESPONSIBLE FOR HAVING THEIR DEWATERING PLAN AND TURBIDITY CONTROL PLAN APPROVED BY THE APPLICABLE REGULATORY AGENCIES, PRIOR TO CONSTRUCTION, AS NECESSARY. REFER TO THE SITE PERMIT CONDITIONS FOR AGENCIES REQUIRING SUCH REVIEW, APPROVAL AND/OR SEPARATE PERMITS. WHERE PUMPS ARE TO BE USED TO REMOVE WATER FROM CONSTRUCTION AREAS, THE WATER SHALL BE TREATED PRIOR TO DISCHARGE TO WETLANDS. TREATMENT METHODS INCLUDE, FOR EXAMPLE, TURBID WATER BEING PUMPED INTO GRASSED SWALES OR APPROPRIATE UPLAND VEGETATED AREAS (OTHER THAN UPLAND PRESERVATION AREAS AND WETLAND BUFFERS), SEDIMENT BASINS, OR CONFINED BY AN APPROPRIATE ENCLOSURE SUCH AS TURBIDITY BARRIERS OR LOW BERMS, AND KEPT CONFINED UNTIL TURBIDITY LEVELS MEET STATE WATER QUALITY STANDARDS.

HAY BALES OR SILT SCREENS SHALL BE INSTALLED PRIOR TO LAND CLEARING TO PROTECT WATER QUALITY AND TO IDENTIFY AREAS TO BE PROTECTED FROM CLEARING ACTIVITIES AND MAINTAINED FOR THE DURATION OF THE PROJECT UNTIL ALL SOIL IS STABILIZED. FLOATING TURBIDITY BARRIERS SHALL BE IN PLACE IN OPEN WATER SYSTEMS PRIOR TO INITIATION OF EARTHWORK AND MAINTAINED FOR THE DURATION OF THE PROJECT UNTIL ALL SOIL IS STABILIZED. THE INSTALLATION OF TEMPORARY EROSION CONTROL BARRIERS SHALL BE COORDINATED WITH THE CONSTRUCTION OF THE PERMANENT EROSION CONTROL FEATURES TO THE EXTENT NECESSARY TO ASSURE EFFECTIVE AND CONTINUOUS CONTROL OF EROSION AND WATER QUALITY THROUGHOUT THE DURATION OF THE PROJECT.

THE SITE CONTRACTOR SHALL SCHEDULE THEIR OPERATIONS SUCH THAT THE AREA OF UNPROTECTED ERODIBLE EARTH EXPOSED AT ANY ONE TIME IS NOT LARGER THAN THE MINIMUM AREA NECESSARY FOR EFFICIENT CONSTRUCTION OPERATION, AND THE DURATION OF EXPOSED, UNCOMPLETED CONSTRUCTION TO THE ELEMENTS SHALL BE AS SHORT AS PRACTICABLE. CLEARING AND GRUBBING SHALL BE SO SCHEDULED AND PERFORMED SUCH THAT GRADING OPERATIONS CAN FOLLOW IMMEDIATELY THEREAFTER. GRADING OPERATIONS SHALL BE SO SCHEDULED AND PERFORMED THAT PERMANENT EROSION CONTROL FEATURES CAN FOLLOW IMMEDIATELY THEREAFTER IF CONDITIONS ON THE PROJECT PERMIT. EXPOSED SOILS SHOULD BE STABILIZED AS SOON AS POSSIBLE, ESPECIALLY SLOPES LEADING TO WETLANDS. STABILIZATION METHODS INCLUDE SOLID SOD, SEEDING AND MULCHING OR HYDROMULCHING TO PROVIDE A TEMPORARY OR PERMANENT GRASS COVER MULCH BLANKETS, FILTER FABRICS, ETC., CAN BE EMPLOYED TO PROVIDE VEGETATIVE COVER. SHEET FLOW OF NEWLY FILLED OR SCRAPED AREAS MAY BE CONTROLLED OR CONTAINED BY THE USE OF BRUSH BARRIERS, DIVERSION SWALES, INTERCEPTOR DITCHES OR LOW BERMS. FLOW SHOULD BE DIRECTED TOWARD AREAS WHERE SEDIMENTS CAN SUFFICIENTLY SETTLE OUT. SPREADER SWALES MAY HELP DISSIPATE CLOUDY WATER PRIOR TO CONTACT WITH WETLANDS.

WATER DERIVED FROM VARIOUS DEWATERING METHODS SHOULD BE PASSED THROUGH SUFFICIENTLY WIDE AREAS OF EXISTING UPLAND VEGETATION TO FILTER OUT EXCESS TURBIDITY. IF THIS IS NOT SUFFICIENT, THE WATER SHALL BE RETAINED IN PREVIOUSLY CONSTRUCTED PERMANENT STORMWATER PONDS OR ELSE RETAINED IN TEMPORARY SEDIMENTATION BASINS UNTIL THE CLARITY IS SUITABLE TO ALLOW FOR ITS DISCHARGE. PLUGGING THE OUTFALLS FROM COMPLETED STORMWATER PONDS MAY BE NEEDED TO AVOID DISCHARGE. HOWEVER, SUCH SITUATIONS SHOULD BE MONITORED CLOSELY TO PRECLUDE BERM FAILURE IF WATER LEVELS RISE TOO HIGH.

IF THE ABOVE CONTROLS REMAIN INEFFECTIVE IN PRECLUDING RELEASE OF TURBID WATER, ESPECIALLY DURING POND OR UTILITY LINE DEWATERING, THEN THE CONTRACTOR MAY BE COMPELLED TO USE A VERTICAL DEWATERING SYSTEM SUCH AS WELL POINTS OR SOCK DRAINS TO WITHDRAW GROUNDWATER WHICH MAY ALREADY BE CLEAR ENOUGH TO ALLOW FOR DIRECT DISCHARGE TO WETLANDS.

ENERGY DISSIPATERS (SUCH AS RIP RAP, A GRAVEL BED, HAY BALES, ETC.) SHALL BE INSTALLED AT THE DISCHARGE POINT OF PIPES OR SWALES IF SCOURING IS OBSERVED. ATTEMPT TO INSTALL ROADWAY CURB AND GUTTERS AS SOON AS POSSIBLE TO REDUCE THE SURFACE AREA FOR EROSION TO OCCUR. IMPLEMENT STORM DRAIN INLET PROTECTION (HAY BALES OR GRAVEL) TO LIMIT SEDIMENTATION WITHIN THE STORMWATER SYSTEM. PERFORM INSPECTIONS AND PERIODIC CLEANING OF SEDIMENTS WHICH WASH OUT INTO THE STREETS UNTIL ALL SOIL IS STABILIZED. VEHICLE OR EQUIPMENT WASHDOWN AREAS WILL BE SUFFICIENTLY REMOVED FROM WETLANDS OR OFFSITE AREAS. FUGITIVE DUST CONTROLS (PRIMARILY BY USING WATER SPRAY TRUCKS) SHALL BE EMPLOYED AS NEEDED TO CONTROL WINDBORN EMISSIONS.

NO CLAY MATERIAL SHALL BE LEFT EXPOSED IN ANY STORMWATER STORAGE FACILITY. IF CLAY OR SANDY-CLAYS ARE ENCOUNTERED DURING STORMWATER STORAGE EXCAVATION, THE SITE CONTRACTOR SHALL NOTIFY THE ENGINEER IMMEDIATELY BEFORE PROCEEDING WITH FURTHER EXCAVATION. IF THE ENGINEER HAS DETERMINED THAT SUCH SOILS ARE NON-CONFORMING AND MUST BE EXCAVATED TO MEET PERMIT AND DESIGN CONDITIONS, EXCAVATION MAY PROCEED AFTER OBTAINING WRITTEN AUTHORIZATION FROM THE APPROPRIATE LOCAL REGULATORY AGENCY. IF SAID SOILS ARE LEFT EXPOSED AT THE PERMITTED AND DESIGNED DEPTH, THE SITE CONTRACTOR SHALL OVER-EXCAVATE THE POND'S BOTTOM AND SIDE SLOPES BY A MINIMUM OF TWELVE (12") INCHES AND BACKFILL WITH CLEAN SANDS TO HELP PREVENT SUSPENSION OF FINE PARTICLES IN THE WATER COLUMN.

DISCHARGES WHICH EXCEED 29 N.T.U.'S OVER THE BACKGROUND LEVELS ARE IN VIOLATION OF STATE WATER QUALITY STANDARDS. DISCHARGES OF WATER QUANTITIES WHICH AFFECT OFFSITE PROPERTIES OR MAY DAMAGE WETLANDS ARE ALSO PROHIBITED BY REGULATING AGENCIES. WATER DISCHARGE VELOCITIES FROM IMPOUNDED AREAS AND TEMPORARY SEDIMENTATION BASINS SHALL BE RESTRICTED TO AVOID SCOURING IN RECEIVING AREAS. IF WATER CLARITY DOES NOT REDUCE TO STATE STANDARDS RAPIDLY ENOUGH IN HOLDING PONDS, IT MAY BE POSSIBLE TO USE CHEMICAL AGENTS SUCH AS ALUM TO FLOCCULATE OR COAGULATE THE SEDIMENT PARTICLES.

ONGOING INSPECTIONS AND PERIODIC MAINTENANCE BY THE SITE CONTRACTOR SHALL OCCUR THROUGHOUT CONSTRUCTION AS NECESSARY TO INSURE THE ABOVE METHODS ARE WORKING SUITABLY. THIS MAY BE NEEDED DAILY, IF CONDITIONS SO WARRANT. SITE CONTRACTORS ARE ENCOURAGED TO OBTAIN AND THOROUGHLY REVIEW THE FLORIDA DEVELOPMENT MANUAL. A GUIDE TO SOUND LAND AND WATER MANAGEMENT, WHICH WAS DEVELOPED BY THE STATE OF FLORIDA DEPARTMENT OF ENVIRONMENTAL PROTECTION IN 1988. THIS PROVIDES FAIRLY IN DEPTH DISCUSSIONS OF RECOMMENDED TECHNIQUES AND ALSO PROVIDES SPECIFIC DESIGN AND TECHNICAL STANDARDS.

PASCO COUNTY DEVELOPMENT REVIEW - STANDARD SITE PLAN NOTES

1. ALL ON-SITE WATER AND SEWER FACILITIES SHALL BE OWNED AND MAINTAINED BY THE OWNER-DEVELOPER.
2. ALL PROPOSED SIGNS MUST BE APPLIED FOR, APPROVED, AND PERMITTED ON AN INDIVIDUAL BASIS APART FROM ANY ULTIMATELY-APPROVED SITE PLAN. APPROVAL OF THIS SITE PLAN DOES NOT CONSTITUTE APPROVAL OF ANY SIGNAGE.
3. HANDICAP PARKING SPACES WILL BE PROPERLY SIGNED AND STRIPED IN ACCORDANCE WITH FLORIDA STATUTE 316, THE MANUAL ON UNIFORM TRAFFIC CONTROL DEVICES, OR OTHER APPLICABLE STANDARDS.
4. THE ARCHITECT/ENGINEER CERTIFIES THAT THE SITE HAS BEEN DESIGNED IN ACCORDANCE WITH THE AMERICANS WITH DISABILITIES ACT.
5. ALL ON-SITE PARKING SPACES WILL BE STRIPED AND SIGNED IN ACCORDANCE WITH THE MANUAL ON UNIFORM TRAFFIC CONTROL DEVICES, LATEST EDITION. PARKING SPACES, DIRECTIONAL ARROWS, AND STOP BARS SHALL BE STRIPED IN WHITE. IT SHALL BE THE OWNER/DEVELOPERS' RESPONSIBILITY TO PROPERLY SIGN AND STRIPE THE SITE IN ACCORDANCE WITH APPLICABLE STANDARDS.
6. THE OWNER/DEVELOPER ACKNOWLEDGES THAT THIS APPROVAL DOES NOT INCLUDE ANY WORK IN COUNTY RIGHT-OF-WAY. ALL RIGHT OF WAY WORK SHALL BE A FUNCTION OF AN APPROVED PASCO COUNTY RIGHT-OF-WAY USE PERMIT.
7. ALL CLEAR-SITE AREAS SHALL BE KEPT FREE OF ANY SIGNAGE, PLANTINGS, TREES, ETC. IN EXCESS OF THREE-AND-A-HALF (3-1/2) FEET IN HEIGHT.
8. NO IRRIGATION SYSTEM OR LANDSCAPING SHALL BE INSTALLED IN ANY COUNTY OR STATE RIGHT-OF-WAY WITHOUT ISSUANCE OF APPROPRIATE RIGHT-OF-WAY USE PERMIT.
9. THE OWNER/DEVELOPER ACKNOWLEDGES THAT THE SITE AND ITS SUBSEQUENT BUILDING PERMITS SHALL COMPLY WITH ALL REZONING/MPUD/PUD CONDITIONS.
10. ALL STRUCTURES, INCLUDING BUFFER WALLS, RETAINING WALLS, SIGNAGE, ETC. REQUIRE SEPARATE BUILDING PERMITS.
11. FLORIDA STATUTE 316.0745 REQUIRES THAT ALL TRAFFIC CONTROL SIGNING AND MARKINGS ON PRIVATE PROPERTY OPEN TO THE GENERAL PUBLIC BE IN CONFORMANCE WITH THE MANUAL ON UNIFORM TRAFFIC CONTROL DEVICES AND FLORIDA DEPARTMENT OF TRANSPORTATION STANDARDS.
12. PRIOR TO CONSTRUCTION, A BUILDING PERMIT SHALL BE OBTAINED FOR ALL STRUCTURES THAT HAVE A FOOTER, REGARDLESS OF SIZE, THROUGH PASCO COUNTY CENTRAL PERMITTING (IE. INCLUDING BUT NOT INCLUSIVE BUILDINGS, ACCESSORIES, AND RETAINING WALLS) (LDC 200,306)
13. ANY OFFSITE DISTURBANCE SHALL BE RESTORED TO THE PRE OR BETTER CONDITION (LDC 605.3.D & P)
14. AS APPLICABLE, THE OWNER/DEVELOPER WILL PROVIDE COPIES OF THE REQUIRED PERMITS FROM THAE RESPECTIVE GOVERNING AGENCIES, PRIOR TO ISSUANCE OF THE SDP (LDC 605.3.CC)

GENERAL NOTES

1. THESE DRAWINGS ARE TO BE CONSIDERED PRELIMINARY AND NOT FOR CONSTRUCTION UNTIL ALL PERMIT APPROVALS ARE CONFIRMED RECEIVED BY THE ENGINEER OF RECORD (EOR).
2. WHENEVER A CONFLICT OCCURS BETWEEN ANY SPECIFICATION AND/OR REGULATORY REQUIREMENT, THE MORE STRINGENT REQUIREMENT SHALL APPLY.
3. IT SHALL BE THE RESPONSIBILITY OF THE CONTRACTOR TO ASSURE THE STAKEOUT SURVEYOR HAS THE MOST CURRENT SET OF PLANS, INCLUDING ALL RECENT REVISIONS MADE BY ADDENDUM OR REQUEST FOR INFORMATION (RFI), AND REGARDLESS IF STAKEOUT IS CONTRACTED THROUGH HAMILTON ENGINEERING & SURVEYING'S SURVEY DEPARTMENT.
4. THESE DRAWINGS SHALL NOT BE UTILIZED FOR CONSTRUCTION PRIOR TO OBTAINING REQUIRED PERMITS FROM ALL GOVERNMENTAL AGENCIES HAVING JURISDICTION OVER THE WORK. THE CONTRACTOR SHALL OBTAIN ALL PERMITS FROM WORK WITHIN PUBLIC EASEMENTS AND RIGHTS-OF-WAY AND INSURE THAT ALL OTHER REQUIRED PERMITS ARE APPROVED PRIOR TO COMMENCING THE WORK.
5. UNLESS OTHERWISE NOTED, ALL MATERIALS AND WORKMANSHIP SHALL CONFORM TO FLORIDA DEPARTMENT OF TRANSPORTATION "STANDARD SPECIFICATIONS FOR ROAD AND BRIDGE CONSTRUCTION", LATEST EDITION.
6. CONTRACTOR IS TO COORDINATE ALL WORK WITH UTILITY COMPANIES IN ORDER TO PREVENT DAMAGE TO UTILITY LINES AND THE MAKING OF ADJUSTMENTS TO SAME, IF REQUIRED. THE CONTRACTOR SHALL PROVIDE AT LEAST 48 HOURS NOTICE TO THE VARIOUS UTILITY OWNERS PRIOR TO CONSTRUCTION.
7. CONTRACTOR SHALL LOCATE PROPERTY LINES AS REQUIRED TO AVOID ENCROACHMENT ONTO ADJACENT PROPERTY. CONTRACTOR SHALL INVESTIGATE FOR EXISTING UTILITIES PRIOR TO CONSTRUCTION. NOTIFY A/E IN THE EVENT OF CONFLICT.
8. CONTRACTOR SHALL PROVIDE AND MAINTAIN ALL TEMPORARY CONSTRUCTION TRAFFIC RELATED ACCESS POINTS TO THE PROJECT SITE AND/OR SPECIFIC AREAS OF WORK ON THE PROJECT SITE AS NECESSARY.
9. ALL FILL SHALL CONSIST OF SATISFACTORY SOIL MATERIALS, DEFINED AS THOSE COMPLYING WITH ASTM D2487 SOIL CLASSIFICATION GROUPS GW, GP, GM, SW, AND SP FREE OF RUBBLE, ORGANICS, CLAY, DEBRIS AND OTHER SIMILAR UNSUITABLE MATERIALS. UNSATISFACTORY SOIL MATERIALS ARE DEFINED AS THOSE COMPLYING WITH ASTM D2487 SOIL CLASSIFICATION GROUPS GC, SM, SC, ML, MH, CL, CH, OL, OH, AND PT. UNLESS OTHERWISE NOTED, ALL FILL SHALL BE COMPACTED TO A MINIMUM OF 95% AASHTO T-180, METHOD D.
10. ALL PEDESTRIAN ROUTES, SIDEWALKS AND RAMPS, AS WELL AS ALL HANDICAPPED SIGNS, SYMBOLS, PARKING SPACES, ETC. SHALL BE CONSTRUCTED IN STRICT ACCORDANCE WITH LOCAL, STATE AND FEDERAL ADA REQUIREMENTS WHETHER OR NOT SHOWN HEREON. CONTRACTOR SHALL VERIFY REQUIREMENTS WITH LOCAL INSPECTORS PRIOR TO POURING SIDEWALKS AND RAMPS.
11. WATER AND SANITARY SEWER SYSTEMS SHALL NOT BE PLACED INTO SERVICE UNTIL INSPECTED AND APPROVED BY THE FDEP AND OTHER PERTINENT REGULATORY AGENCIES. CONTRACTOR SHALL BE RESPONSIBLE FOR SCHEDULING AND OBTAINING THE FOLLOWING ITEMS:
    * INSPECTOR APPROVALS
    * LIFT STATION START-UP TEST
    * CURRENT BACTERIOLOGICAL TEST RESULTS
    * PRESSURE, EXFILTRATION AND OTHER APPROPRIATE TEST RESULTS
    * LOCATING WIRE CONTINUITY TESTS
    * AS-BUILT SURVEYS

    ALL APPLICABLE ITEMS SHALL BE PROVIDED TO HAMILTON ENGINEERING & SURVEYING A MINIMUM OF 60 DAYS PRIOR TO FINAL ACCEPTANCE AND PLACEMENT INTO OPERATION.
12. CONTRACTOR SHALL SECURE ALL OPENINGS UNDER CONSTRUCTION AT THE END OF EACH WORKING DAY.

PASCO COUNTY GEOLOGIC NOTES

SHOULD ANY NOTICEABLE SOIL SLUMPING OR SINKHOLE FORMATION BECOME EVIDENT, THE APPLICANT/DEVELOPER SHALL IMMEDIATELY NOTIFY THE COUNTY, TAMPA BAY WATER (TBW), AND SWFWMD, AND ADOPT ONE OR MORE OF THE FOLLOWING PROCEDURES AS DETERMINED TO BE APPROPRIATE BY THE COUNTY AND SWFWMD.

1. IF THE SLUMPING OR SINKHOLE FORMATION BECOMES EVIDENT BEFORE OR DURING CONSTRUCTION ACTIVITIES, STOP ALL WORK (EXCEPT FOR MITIGATION ACTIVITIES) IN THE AFFECTED AREA AND REMAIN STOPPED UNTIL THE COUNTY AND SWFWMD APPROVE RESUMING CONSTRUCTION ACTIVITIES.
2. TAKE IMMEDIATE MEASURES TO ENSURE NO SURFACE WATER DRAINS INTO THE AFFECTED AREAS.
3. VISUALLY INSPECT THE AFFECTED AREA.
4. EXCAVATE AND BACKFILL OR GROUT AS REQUIRED TO FILL THE AFFECTED AREA AND PREVENT FURTHER SUBSIDENCE.
5. USE SOIL REINFORCEMENT MATERIALS IN THE BACKFILLING OPERATION, WHEN APPROPRIATE.
6. IF THE AFFECTED AREA IS IN THE VICINITY OF A WATER-RETENTION AREA, MAINTAIN A MINIMUM DISTANCE OF TWO FEET FROM THE BOTTOM OF THE RETENTION POND TO THE SURFACE OF THE LIME-ROCK OR KARST CONNECTION.
7. IF THE AFFECTED AREA IS IN THE VICINITY OF A WATER-RETENTION AREA AND THE ABOVE METHODS DO NOT STABILIZE THE COLLAPSE, RELOCATE THE RETENTION AREA.
8. DISCHARGE OF STORM-WATER INTO DEPRESSIONS WITH DIRECT OR DEMONSTRATED HYDROLOGIC CONNECTION TO THE FLORIDAN AQUIFER SHALL BE PROHIBITED.

POND EXCAVATION NOTES:

No excavation shall extend below the permitted design depths/elevations shown on the drawings, unless additional testing supports otherwise; and no lower semi-confining unit clayey soil material and/or limestone materials shall be excavated, regardless if these materials are encountered within the permitted excavation depths/elevations. If any lower semi-confining unit clay soil materials or limestone materials are encountered above the permitted depths/elevations, then excavation operations shall cease in the general area. EPC Wetlands Management staff must be contacted prior to any excavation of clays. In the absence of any confining or semi-confining unit clayey soils, a minimum of five feet of undisturbed soils shall remain above the underlying limestone. Any excavation below the bottom elevations shown on the plan will require an approved permit modification from SWFWMD for the deeper excavation.

UTILITY PROVIDERS

WATER	EXISTING WELL ON SITE
SEWER	EXISTING SEPTIC SYSTEM ON SITE
ELECTRIC	PROGRESS ENERGY FLORIDA, INC. 4121 SAINT LAWRENCE DRIVE NEW PORT RICHEY, FLORIDA 34653 PHONE (727) 372-5144
CABLE	BRIGHT HOUSE NETWORKS 30432 SR54, WESLEY CHAPEL, FL 33543 PHONE (813) 862-0522
TELEPHONE	VERIZON FLORIDA, INC. 146 ORANGE PLACE, MAITLAND, FL 32751 PHONE (407) 539-0644
GAS	TECO: PEOPLES GAS 1400 CHANNELSIDE DR., TAMPA, FL 33605 PHONE (813) 275-3742

HAMILTON
ENGINEERING & SURVEYING INC
3409 W. LEMON STREET
TAMPA, FL 33609
TEL (813) 250-3535
FAX (813) 250-3636
LB #7013 CA #8474

SHEET TITLE: GENERAL CONSTRUCTION NOTES

RECREATION ALTERNATIVE, LLC.
2840 LAND O' LAKES BLVD.
PASCO COUNTY, FLORIDA

NO.	DATE	REVISION

HEATHER E. WERTZ, PE — AUGUST 4, 2015

DRAWN BY: SANDOVAL | CHECKED BY: BURBANK
JOB #: 03177.0001
SEC TWP RNG: 25/26S/18E
DATE: 01/09/2015

J:\3001 To 3500\03177 Recreation Alternatives LLC\0001- 2840 Land O Lakes Blvd\ENGR\1 DWGs\Construction\GC-001.dwg (GENERAL NOTES) meghanb Aug 04, 2015 - 3:35pm

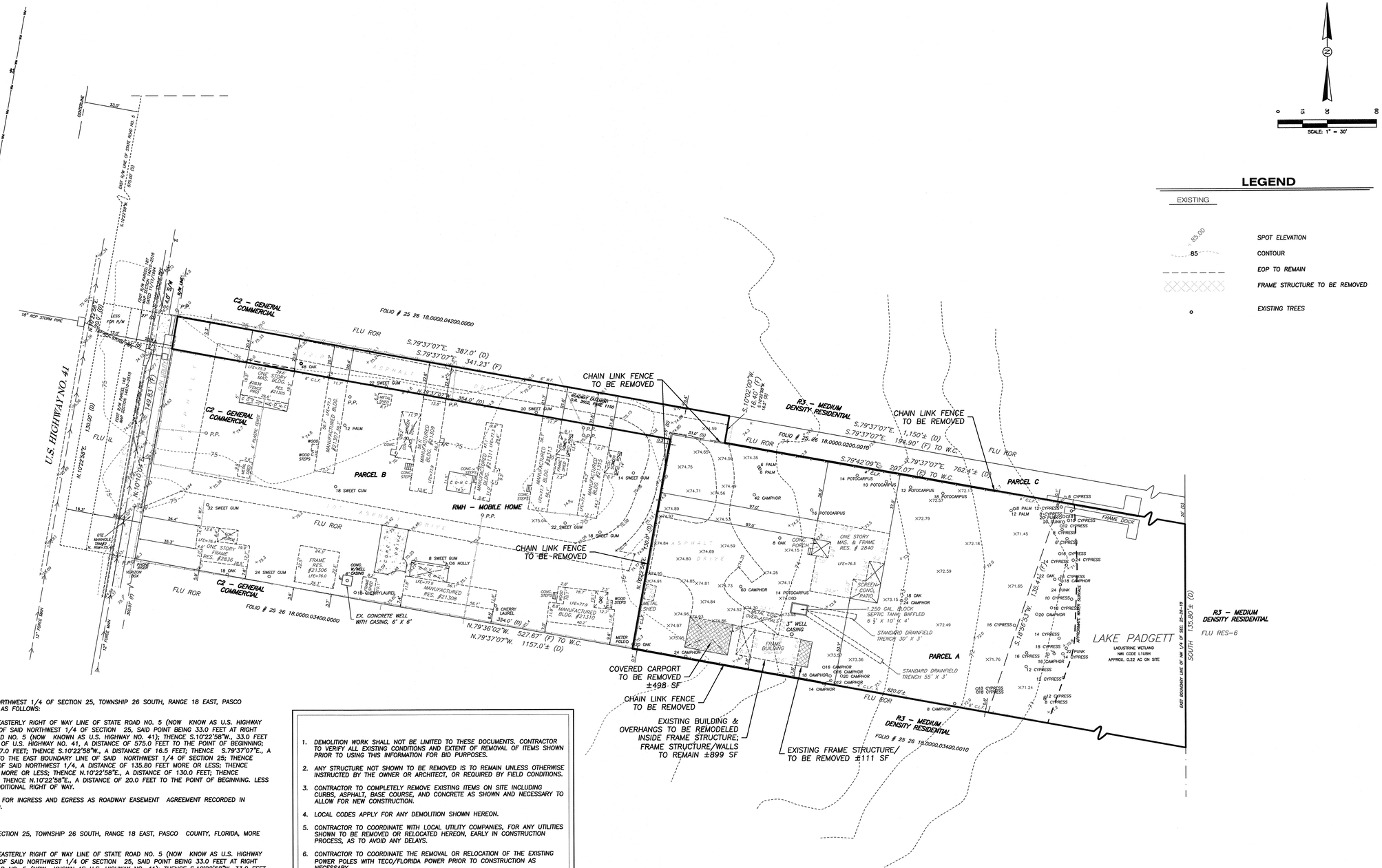

Description:
(AS FURNISHED)

PARCEL A

LEGAL DESCRIPTION: A PORTION OF THE NORTHWEST 1/4 OF SECTION 25, TOWNSHIP 26 SOUTH, RANGE 18 EAST, PASCO COUNTY, FLORIDA, MORE FULLY DESCRIBED AS FOLLOWS:

COMMENCE AT THE INTERSECTION OF THE EASTERLY RIGHT OF WAY LINE OF STATE ROAD NO. 5 (NOW KNOW AS U.S. HIGHWAY NO. 41) AND THE NORTH BOUNDARY LINE OF SAID NORTHWEST 1/4 OF SECTION 25, SAID POINT BEING 33.0 FEET AT RIGHT ANGLES TO THE CENTERLINE OF STATE ROAD NO. 5 (NOW KNOWN AS U.S. HIGHWAY NO. 41); THENCE S.10°22'58"W., 33.0 FEET FROM AND PARALLEL TO THE CENTERLINE OF U.S. HIGHWAY NO. 41, A DISTANCE OF 575.0 FEET TO THE POINT OF BEGINNING; THENCE S.79°37'07"E., A DISTANCE OF 387.0 FEET; THENCE S.10°22'58"W., A DISTANCE OF 16.5 FEET; THENCE S.79°37'07"E., A DISTANCE OF 762.4 FEET MORE OR LESS TO THE EAST BOUNDARY LINE OF SAID NORTHWEST 1/4 OF SECTION 25; THENCE SOUTH, ALONG THE EAST BOUNDARY LINE OF SAID NORTHWEST 1/4, A DISTANCE OF 135.80 FEET MORE OR LESS; THENCE N.79°37'07"W., A DISTANCE OF 820.0 FEET MORE OR LESS; THENCE N.10°22'58"E., A DISTANCE OF 130.0 FEET; THENCE N.79°37'07"W., A DISTANCE OF 354.0 FEET; THENCE N.10°22'58"E., A DISTANCE OF 20.0 FEET TO THE POINT OF BEGINNING. LESS THE WESTERLY 17.0 FEET THEREOF FOR ADDITIONAL RIGHT OF WAY.

TOGETHER WITH NON-EXCLUSIVE EASEMENT FOR INGRESS AND EGRESS AS ROADWAY EASEMENT AGREEMENT RECORDED IN OFFICIAL RECORDS BOOK 3602, PAGE 1150.

PARCEL B

A PORTION OF THE NORTHWEST 1/4 OF SECTION 25, TOWNSHIP 26 SOUTH, RANGE 18 EAST, PASCO COUNTY, FLORIDA, MORE FULLY DESCRIBED AS FOLLOWS:

COMMENCE AT THE INTERSECTION OF THE EASTERLY RIGHT OF WAY LINE OF STATE ROAD NO. 5 (NOW KNOW AS U.S. HIGHWAY NO. 41) AND THE NORTH BOUNDARY LINE OF SAID NORTHWEST 1/4 OF SECTION 25, SAID POINT BEING 33.0 FEET AT RIGHT ANGLES TO THE CENTERLINE OF STATE ROAD NO. 5 (NOW KNOWN AS U.S. HIGHWAY NO. 41); THENCE S.10°22'58"W. 33.0 FEET FROM AND PARALLEL TO THE CENTERLINE OF U.S. HIGHWAY NO. 41, A DISTANCE OF 595.0 FEET TO THE POINT OF BEGINNING; THENCE S.79°37'07"E., A DISTANCE OF 354.0 FEET; THENCE S.10°22'58"W., A DISTANCE OF 130.0 FEET; THENCE N.79°37'07"W., A DISTANCE OF 354.0 FEET; THENCE N.10°22'58"E., A DISTANCE OF 130.0 FEET TO THE POINT OF BEGINNING. LESS THE WESTERLY 17.0 FEET THEREOF FOR ADDITIONAL RIGHT OF WAY.

PARCEL C

LEGAL DESCRIPTION: A PORTION OF THE NORTHWEST 1/4 OF SECTION 25, TOWNSHIP 26 SOUTH, RANGE 18 EAST, PASCO COUNTY, FLORIDA, MORE FULLY DESCRIBED AS FOLLOWS:

COMMENCE AT THE INTERSECTION OF THE EASTERLY RIGHT OF WAY LINE OF STATE ROAD NO. 5 (NOW KNOWN AS U.S. HIGHWAY NO. 41) AND THE NORTH BOUNDARY LINE OF SAID NORTHWEST 1/4 OF SECTION 25, SAID POINT BEING 33.0 FEET AT RIGHT ANGLES TO THE CENTERLINE OF STATE ROAD NO. 5 (NOW KNOWN AS U.S. HIGHWAY NO. 41); THENCE S.10°22'58"W., 33.0 FEET FROM AND PARALLEL TO THE CENTERLINE OF U.S. HIGHWAY NO. 41, A DISTANCE OF 575.0 FEET TO THE POINT OF BEGINNING; THENCE S.79°37'07"E., A DISTANCE OF 1,150 FEET, MORE OR LESS, TO A LINE IN THE MIDDLE SECTION, WHICH POINT IS IN LAKE PADGETT; THENCE SOUTH, WITH SAID LINE, 20 FEET; THENCE N.79°37'07"W., 1,150 FEET, MORE OF LESS, TO THE RIGHT OF WAY OF STATE ROAD NO. 5; THENCE NORTH, WITH SAID RIGHT OF WAY 15.0 FEET TO THE POINT OF BEGINNING. LESS ROAD RIGHT OF WAY AND LESS THE FOLLOWING LEGAL DESCRIPTION:

A PORTION OF THE NORTHWEST 1/4 OF SECTION 25; TOWNSHIP 26 SOUTH, RNAGE 18 EAST, PASCO COUNTY, FLORIDA, MORE FULLY DESCRIBED AS FOLLOWS:

COMMENCE AT THE INTERSECTION OF THE EASTERLY RIGHT OF WAY LINE OF STATE ROAD NO. 5 (NOW KNOWN AS U.S. HIGHWAY NO. 41) AND THE NORTH BOUNDARY LINE OF SAID NORTHWEST 1/4 OF SECTION 25, SAID POINT BEING 33.0 FEET AT RIGHT ANGLES TO THE CENTERLINE OF STATE ROAD NO. 5 (NOW KNOWN AS U.S. HIGHWAY NO. 41); THENCE S.10°22'58"W., 33.0 FEET FROM AND PARALLEL TO THE CENTERLINE OF U.S. HIGHWAY NO. 41, A DISTANCE OF 575.0 FEET TO THE POINT OF BEGINNING; THENCE S.79°37'07"E., A DISTANCE OF 387.0 FEET; THENCE S.10°22'58"W., A DISTANCE OF 16.5 FEET; THENCE S.79°37'07"E., A DISTANCE OF 762.4 FEET MORE OR LESS TO THE EAST BOUNDARY LINE OF SAID NORTHWEST 1/4 OF SECTION 25; THENCE SOUTH ALONG THE EAST BOUNDARY LINE OF SAID NORTHWEST 1/4, A DISTANCE OF 135.80 FEET MORE OR LESS; THENCE N.79°37'07"W., A DISTANCE OF 820.0 FEET MORE OR LESS; THENCE N.10°22'58"E., A DISTANCE OF 130.0 FEET; THENCE N.79°37'07"W., A DISTANCE OF 354.0 FEET; THENCE N.10°22'58"E., A DISTANCE OF 20.0 FEET TO THE POINT OF BEGINNING. LESS THE WESTERLY 17.0 FEET THEREOF FOR ADDITIONAL RIGHT OF WAY.

TOGETHER WITH NON-EXCLUSIVE EASEMENT FOR INGRESS AND EGRESS AS REV. ROADWAY EASEMENT AGREEMENT RECORDED IN OFFICIAL RECORDS BOOK 3602, PAGE 1150.

1. DEMOLITION WORK SHALL NOT BE LIMITED TO THESE DOCUMENTS. CONTRACTOR TO VERIFY ALL EXISTING CONDITIONS AND EXTENT OF REMOVAL OF ITEMS SHOWN PRIOR TO USING THIS INFORMATION FOR BID PURPOSES.
2. ANY STRUCTURE NOT SHOWN TO BE REMOVED IS TO REMAIN UNLESS OTHERWISE INSTRUCTED BY THE OWNER OR ARCHITECT, OR REQUIRED BY FIELD CONDITIONS.
3. CONTRACTOR TO COMPLETELY REMOVE EXISTING ITEMS ON SITE INCLUDING CURBS, ASPHALT, BASE COURSE, AND CONCRETE AS SHOWN AND NECESSARY TO ALLOW FOR NEW CONSTRUCTION.
4. LOCAL CODES APPLY FOR ANY DEMOLITION SHOWN HEREON.
5. CONTRACTOR TO COORDINATE WITH LOCAL UTILITY COMPANIES, FOR ANY UTILITIES SHOWN TO BE REMOVED OR RELOCATED HEREON, EARLY IN CONSTRUCTION PROCESS, AS TO AVOID ANY DELAYS.
6. CONTRACTOR TO COORDINATE THE REMOVAL OR RELOCATION OF THE EXISTING POWER POLES WITH TECO/FLORIDA POWER PRIOR TO CONSTRUCTION AS NECESSARY.
7. CONTRACTOR TO FIELD COORDINATE PHASING OF ALL DEMOLITION AND CONSTRUCTION TO LIMIT INTERRUPTION OF TRAFFIC FLOW AND DAILY OPERATIONS.
8. CONTACT ENGINEER IMMEDIATELY IF ANY UNDERGROUND STRUCTURES, FOUND DURING EXCAVATION, IMPEDE THE COMPLETION OF CONSTRUCTION AS SHOWN.
9. CONTRACTOR SHALL ASSUME UTILIZATION OF THE EXISTING BASE COURSE UNDER NEW ASPHALT WHERE GRADE ALLOWS FOR BID PURPOSES.
10. IN AREAS WHERE ASPHALT IS SHOWN TO BE REMOVED, BASE MAY REMAIN IF AREA IS PROPOSED TO BE COVERED WITH CONCRETE (WALKS, PAVEMENT, ETC.)
11. ADDITIONAL ASPHALT AREAS, NOT SHOWN HEREON, MAY REQUIRE REMOVAL IF REGRADING NEEDS TO OCCUR FOR PROPER DRAINAGE. SEE PROPOSED GRADING PLAN FOR DETAILS.
12. SOME ITEMS SHOWN TO BE REMOVED MAY NEED TO BE RELOCATED TO OTHER AREAS ON SITE AT THE REQUEST OF THE OWNER. CONTRACTOR TO FIELD COORDINATE.
13. THERE MAY BE EXISTING IRRIGATION LINES IN THE AREA OF WORK THAT NEED TO BE REMOVED AND/OR RELOCATED, THAT ARE NOT SHOWN HEREON. CONTRACTOR TO FIELD VERIFY THE EXTENT OF IRRIGATION WORK TO BE PERFORMED PRIOR TO BID OR PROVIDE A REASONABLE ALLOWANCE AS NECESSARY. CONTRACTOR TO COORDINATE RELOCATION WITH OWNER OR LANDSCAPE ARCHITECT PRIOR TO CONSTRUCTION.

PROJECT IS LOCATED IN FLOOD ZONE X ACCORDING TO FEMA F.I.R.M. COMMUNITY PANEL NO: 12101C0404F DATED 09/26/14

Elevations based on The National Geodetic Vertical Datum of 1929 (NVGD 29)

HAMILTON
ENGINEERING & SURVEYING INC
2400 W. Lemon Street
TAMPA, FL. 33609
TEL: (813) 250-3535
FAX: (813) 250-3536
LB #7013 CA #8474

SHEET TITLE: EXISTING SITE CONDITIONS & DEMO PLAN

RECREATION ALTERNATIVE, LLC.
2840 LAND O' LAKES BLVD.
PASCO COUNTY, FLORIDA

NO.	DATE	REVISION

STATE OF FLORIDA PROFESSIONAL ENGINEER HEATHER E. WEIRICH LICENSE NO. 65895 AUGUST 14, 2015

DRAWN BY: SANDOVAL
CHECKED BY: BURBANK
JOB #: 03177.0001
SEC TWP RNG: 25/26S/18E
DATE: 01/09/2015

J:\3001 To 3500\03177 Recreation Alternatives LLC\0001- 2840 Land O Lakes Blvd\ENGR\1 DWGs\Construction\CD-401.dwg (EXISTING SITE CONDITIONS & DEMO PLAN) meghanb Aug 04, 2015 - 3:35pm

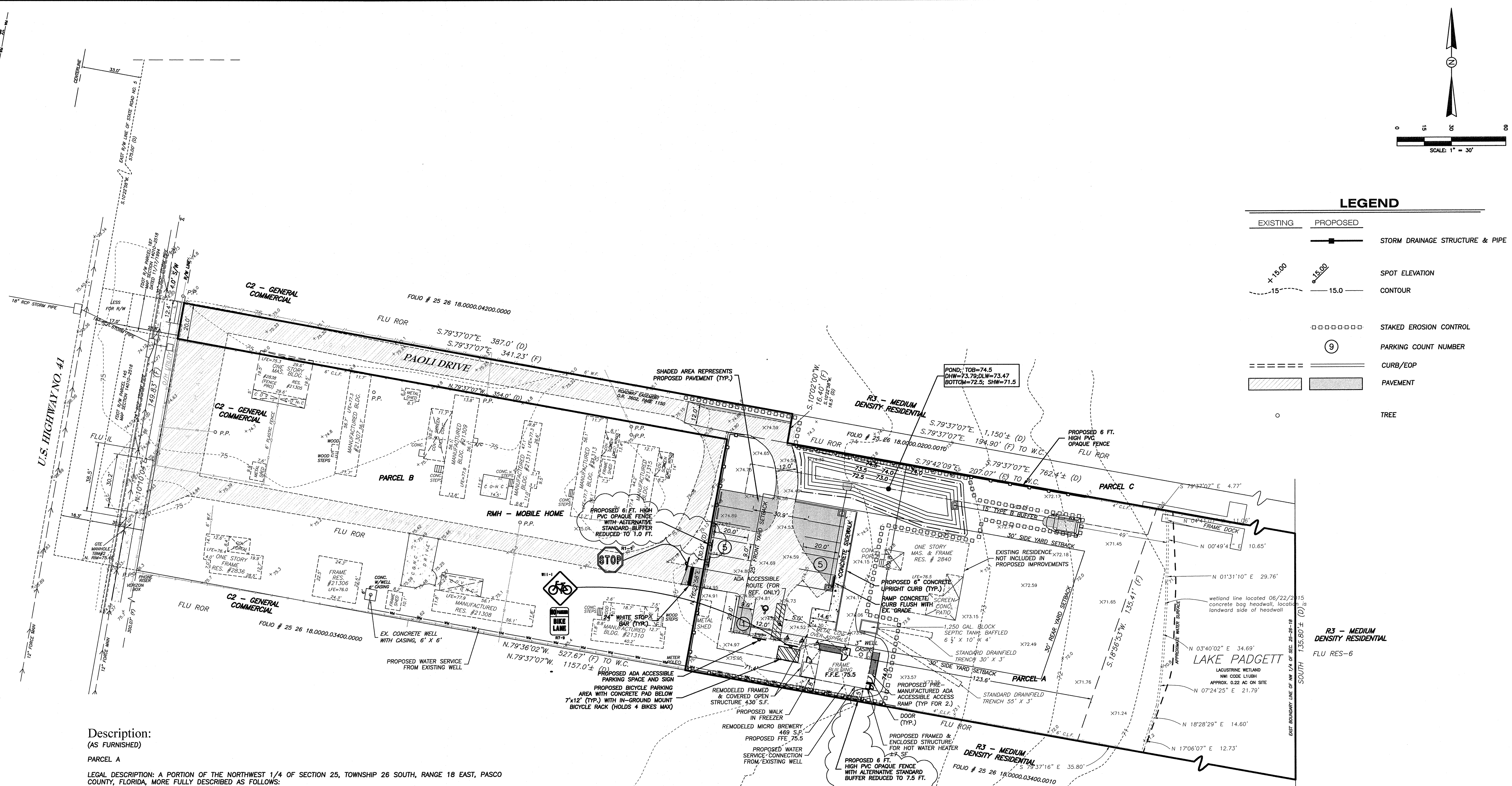

Description:
(AS FURNISHED)

PARCEL A

LEGAL DESCRIPTION: A PORTION OF THE NORTHWEST 1/4 OF SECTION 25, TOWNSHIP 26 SOUTH, RANGE 18 EAST, PASCO COUNTY, FLORIDA, MORE FULLY DESCRIBED AS FOLLOWS:

COMMENCE AT THE INTERSECTION OF THE EASTERLY RIGHT OF WAY LINE OF STATE ROAD NO. 5 (NOW KNOW AS U.S. HIGHWAY NO. 41) AND THE NORTH BOUNDARY LINE OF SAID NORTHWEST 1/4 OF SECTION 25, SAID POINT BEING 33.0 FEET AT RIGHT ANGLES TO THE CENTERLINE OF STATE ROAD NO. 5 (NOW KNOWN AS U.S. HIGHWAY NO. 41); THENCE S.10°22'58"W., 33.0 FEET FROM AND PARALLEL TO THE CENTERLINE OF U.S. HIGHWAY NO. 41, A DISTANCE OF 575.0 FEET TO THE POINT OF BEGINNING; THENCE S.79°37'07"E., A DISTANCE OF 387.0 FEET; THENCE S.10°22'58"W., A DISTANCE OF 16.5 FEET; THENCE S.79°37'07"E., A DISTANCE OF 762.4 FEET MORE OR LESS TO THE EAST BOUNDARY LINE OF SAID NORTHWEST 1/4 OF SECTION 25; THENCE SOUTH, ALONG THE EAST BOUNDARY LINE OF SAID NORTHWEST 1/4, A DISTANCE OF 135.80 FEET MORE OR LESS; THENCE N.79°37'07"W., A DISTANCE OF 820.0 FEET MORE OR LESS; THENCE N.10°22'58"E., A DISTANCE OF 130.0 FEET; THENCE N.79°37'07"W., A DISTANCE OF 354.0 FEET; THENCE N.10°22'58"E., A DISTANCE OF 20.0 FEET TO THE POINT OF BEGINNING. LESS THE WESTERLY 17.0 FEET THEREOF FOR ADDITIONAL RIGHT OF WAY.

TOGETHER WITH NON-EXCLUSIVE EASEMENT FOR INGRESS AND EGRESS AS ROADWAY EASEMENT AGREEMENT RECORDED IN OFFICIAL RECORDS BOOK 3602, PAGE 1150.

PARCEL B

A PORTION OF THE NORTHWEST 1/4 OF SECTION 25, TOWNSHIP 26 SOUTH, RANGE 18 EAST, PASCO COUNTY, FLORIDA, MORE FULLY DESCRIBED AS FOLLOWS:

COMMENCE AT THE INTERSECTION OF THE EASTERLY RIGHT OF WAY LINE OF STATE ROAD NO. 5 (NOW KNOW AS U.S. HIGHWAY NO. 41) AND THE NORTH BOUNDARY LINE OF SAID NORTHWEST 1/4 OF SECTION 25, SAID POINT BEING 33.0 FEET AT RIGHT ANGLES TO THE CENTERLINE OF STATE ROAD NO. 5 (NOW KNOWN AS U.S. HIGHWAY NO. 41); THENCE S.10°22'58"W. 33.0 FEET FROM AND PARALLEL TO THE CENTERLINE OF U.S. HIGHWAY NO. 41, A DISTANCE OF 595.0 FEET TO THE POINT OF BEGINNING; THENCE S.79°37'07"E., A DISTANCE OF 354.0 FEET; THENCE S.10°22'58"W., A DISTANCE OF 130.0 FEET; THENCE N.79°37'07"W., A DISTANCE OF 354.0 FEET; THENCE N.10°22'58"E., A DISTANCE OF 130.0 FEET TO THE POINT OF BEGINNING. LESS THE WESTERLY 17.0 FEET THEREOF FOR ADDITIONAL RIGHT OF WAY.

PARCEL C

LEGAL DESCRIPTION: A PORTION OF THE NORTHWEST 1/4 OF SECTION 25, TOWNSHIP 26 SOUTH, RANGE 18 EAST, PASCO COUNTY, FLORIDA, MORE FULLY DESCRIBED AS FOLLOWS:

COMMENCE AT THE INTERSECTION OF THE EASTERLY RIGHT OF WAY LINE OF STATE ROAD NO. 5 (NOW KNOWN AS U.S. HIGHWAY NO. 41) AND THE NORTH BOUNDARY LINE OF SAID NORTHWEST 1/4 OF SECTION 25, SAID POINT BEING 33.0 FEET AT RIGHT ANGLES TO THE CENTERLINE OF STATE ROAD NO. 5 (NOW KNOWN AS U.S. HIGHWAY NO. 41); THENCE S.10°22'58"W., 33.0 FEET FROM AND PARALLEL TO THE CENTERLINE OF OF U.S. HIGHWAY NO. 41, A DISTANCE OF 575.0 FEET TO THE POINT OF BEGINNING; THENCE S.79°37'07"E., A DISTANCE OF 1,150 FEET, MORE OR LESS, TO A LINE IN THE MIDDLE SECTION, WHICH POINT IS IN LAKE PADGETT; THENCE SOUTH, WITH SAID LINE, 20 FEET; THENCE N.79°37'07"W., 1,150 FEET, MORE OF LESS, TO THE RIGHT OF WAY OF STATE ROAD NO. 5; THENCE NORTH, WITH SAID RIGHT OF WAY 15.0 FEET TO THE POINT OF BEGINNING. LESS ROAD RIGHT OF WAY AND LESS THE FOLLOWING LEGAL DESCRIPTION:

A PORTION OF THE NORTHWEST 1/4 OF SECTION 25; TOWNSHIP 26 SOUTH, RNAGE 18 EAST, PASCO COUNTY, FLORIDA, MORE FULLY DESCRIBED AS FOLLOWS:

COMMENCE AT THE INTERSECTION OF THE EASTERLY RIGHT OF WAY LINE OF STATE ROAD NO. 5 (NOW KNOWN AS U.S. HIGHWAY NO. 41) AND THE NORTH BOUNDARY LINE OF SAID NORTHWEST 1/4 OF SECTION 25, SAID POINT BEING 33.0 FEET AT RIGHT ANGLES TO THE CENTERLINE OF STATE ROAD NO. 5 (NOW KNOWN AS U.S. HIGHWAY NO. 41); THENCE S.10°22'58"W., 33.0 FEET FROM AND PARALLEL TO THE CENTERLINE OF U.S. HIGHWAY NO. 41, A DISTANCE OF 575.0 FEET TO THE POINT OF BEGINNING; THENCE S.79°37'07"E., A DISTANCE OF 387.0 FEET; THENCE S.10°22'58"W., A DISTANCE OF 16.5 FEET; THENCE S.79°37'07"E., A DISTANCE OF 762.4 FEET MORE OR LESS TO THE EAST BOUNDARY LINE OF SAID NORTHWEST 1/4 OF SECTION 25; THENCE SOUTH ALONG THE EAST BOUNDARY LINE OF SAID NORTHWEST 1/4, A DISTANCE OF 135.80 FEET MORE OR LESS; THENCE N.79°37'07"W., A DISTANCE OF 820.0 FEET MORE OR LESS; THENCE N.10°22'58"E., A DISTANCE OF 130.0 FEET; THENCE N.79°37'07"W., A DISTANCE OF 354.0 FEET; THENCE N.10°22'58"E., A DISTANCE OF 20.0 FEET TO THE POINT OF BEGINNING. LESS THE WESTERLY 17.0 FEET THEREOF FOR ADDITIONAL RIGHT OF WAY.

TOGETHER WITH NON-EXCLUSIVE EASEMENT FOR INGRESS AND EGRESS AS REV. ROADWAY EASEMENT AGREEMENT RECORDED IN OFFICIAL RECORDS BOOK 3602, PAGE 1150.

SITE DATA

TOTAL SITE AREA	104195 SF/	2.39 ACRES
PROJECT SITE AREA	20473 SF/	0.47 ACRES
EXISTING IMPERVIOUS AREA	1742 SF/	0.04 ACRES
PROPOSED IMPERVIOUS AREA	3920 SF/	0.09 ACRES
EXISTING "GREEN" AREA	18731 SF/	0.43 ACRES
PROPOSED "GREEN" AREA	14370 SF/	0.33 ACRES
ONSITE WETLANDS AREA	9512 SF/	0.22 ACRES
TOTAL WATER BODIES AREA	11695 SF/	0.27 ACRES
CONSERVATION LANDS AREA	0 SF/	0.00 ACRES
DEVELOPABLE AREA	74210 SF/	1.70 ACRES
BUILDING HEIGHT	12'-3"	
FLOOR AREA RATIO (FAR)	TOTAL BUILDING AREA (SF)/43,560 SF/DEVELOPABLE ACREAGE 906 SF/20,473 SF) = 0.044	
FUTURE LAND USE (FLU)	RETAIL/OFFICE/RESIDENTIAL (ROR)	
PARKING REQUIRED	MICRO-BREWERY – 1/75 S.F. OF GFA (906 S.F.) = 12 TOTAL SPACES	
TOTAL PARKING PROVIDED	12 SPACES	
STANDARD PARKING REQUIRED	11	
STANDARD PARKING PROVIDED	11 SPACES	
COMPACT PARKING REQUIRED	0	
COMPACT PARKING PROVIDED	0	
H/C PARKING REQUIRED	1 SPACE	
H/C PARKING PROVIDED	1 SPACE	
BICYCLE PARKING REQUIRED	1	
BICYCLE PARKING PROVIDED	4	
POTABLE WATER	EXISTING WELL	
SAINITARY SEWER	EXISTING SEPTIC	
FIRE PROTECTION	PASCO COUNTY FIRE RESCUE, FIRE HYDRANTS	
REFUSE COLLECTION	DUMPSTER PICK-UP	
CURRENT ZONING	C-2	
LAND USE	GENERAL COMMERCIAL	
PARCEL ID	NO. 25-26-18-0000-01900-0000	
REZONING	RZ-7089 APPROVED 2/11/14 CU14-06 APPROVED 2/11/14 R-3 TO C-2	

GENERAL NOTES

1. REFERENCED INDEX NUMBERS REFER TO DETAILS DEPICTED IN THE F.D.O.T. ROADWAY AND TRAFFIC DESIGN STANDARDS.
2. UNLESS OTHERWISE NOTED, ALL MATERIALS AND WORKMANSHIP SHALL CONFORM TO FLORIDA DEPARTMENT OF TRANSPORTATION "STANDARD SPECIFICATIONS FOR ROAD AND BRIDGE CONSTRUCTION", LATEST EDITION.
3. IT SHALL BE THE CONTRACTOR'S RESPONSIBILITY TO PROVIDE MAINTENANCE OF TRAFFIC AND PEDESTRIAN CONTROL PER APPROPRIATE FDOT SPECIFICATIONS. SEE FDOT INDEX# 600 THROUGH 660.
4. ALL DIMENSIONS ARE TO OUTSIDE WALL OF BUILDING AND FRONT FACE OF CURB UNLESS OTHERWISE NOTED.
5. THE 5' WIDE INTERNAL TO EXTERNAL SIDEWALK CONNECTION IS TO BE ADA COMPLIANT.
6. FLORIDA STATE STATUTE 316.0745 REQUIRES THAT ALL TRAFFIC CONTROL SIGNING AND MARKINGS ON PRIVATE PROPERTY OPENED TO THE GENERAL PUBLIC BE IN CONFORMANCE WITH THE MANUAL ON UNIFORM TRAFFIC CONTROL DEVICES AND FLORIDA DEPARTMENT OF TRANSPORTATION STANDARDS.
7. ALL PARKING SPACES SHALL BE STRIPED IN WHITE.
8. ALL HANDICAPPED PARKING SPACES SHALL BE SIGNED AND MARKED IN ACCORDANCE WITH FLORIDA DEPARTMENT OF TRANSPORTATION STANDARDS INDEX.
9. IF THE SITE HAS ANY INTERNAL ROADS THAT ARE TO BE NAMED, STREET NAME SIGNS WILL BE REQUIRED PER THE FOLLOWING STANDARDS. STREET NAME SIGNS SHALL BE 9-INCH ON ALL ROAD CLASSIFICATIONS. ALL SIGNS SHALL HAVE 6-INCH SERIES B LETTERS. ALL STREET NAME SIGNS ON PRIVATE ROADS SHALL BE STANDARD D3 STREET NAME SIGNS WITH THE COLORS REVERSED; WHITE BACKGROUND WITH GREEN LETTERS AND BORDER. AT INTERSECTIONS WITH COUNTY OR STATE MAINTAINED ROADS; THE COUNTY OR STATE MAINTAINED ROAD SHALL BE GREEN BACKGROUND WITH WHITE LETTERS AND BORDER.
10. FOR IMPROVEMENTS WITHIN THE COUNTY RIGHT-OF-WAY WITH TRAFFIC CONTROL DEVICES.

    THE SUBMITTAL DATA FORM SHALL BE SUBMITTED FOR APPROVAL PRIOR TO INSTALLATION OF ANY TRAFFIC CONTROL DEVICES IN THE COUNTY RIGHT-OF-WAY.
11. ANY LIGHTING USED TO ILLUMINATE ANY PARKING AREA SHALL BE SO ARRANGED AS TO DIRECT AND/OR SHIELD LIGHT AWAY FROM ADJOINING RESIDENTIAL PREMISES AND RIGHT-OF-WAY.
12. NO TRUCKS ARE ARE PROPOSED TO BE LOADING AND/OR UNLOADING ON THE SITE FOR DELIVERIES.

PASCO COUNTY NOTES

1. IF DURING CONSTRUCTION ACTIVITIES ANY EVIDENCE OF HISTORIC RESOURCES, INCLUDING BUT NOT LIMITED TO ABORIGINAL OR HISTORIC POTTERY, PREHISTORIC STONE TOOLS, BONE OR SHELL TOOLS, HISTORIC TRASH PITS, OR HISTORIC BUILDING FOUNDATION, ARE DISCOVERED, WORK SHALL COME TO AN IMMEDIATE STOP AND THE FLORIDA DEVELOPMENT OF HISTORIC RESOURCES (STATE HISTORIC PRESERVATION OFFICER) AND PASCO COUNTY SHALL BE NOTIFIED WITHIN TWO WORKING DAYS OF THE RESOURCES FOUND ON THE SITE.
2. IF DURING CONSTRUCTION ACTIVITIES ANY EVIDENCE OF THE PRESENCE OF STATE AND FEDERALLY PROTECTED PLANT AND/OR ANIMAL SPECIES IS DISCOVERED, WORK SHALL COME TO AN IMMEDIATE STOP AND PASCO COUNTY SHALL BE NOTIFIED WITHIN TWO WORKING DAYS OF THE PLANT AND/OR ANIMAL SPECIES FOUND ON THE SITE.

FIRE NOTES

1. PER NFPA-1, 16.4.3.1.3 WHERE UNDERGROUND WATER MAINS AND HYDRANTS ARE PROVIDED, THEY SHALL BE INSTALLED, COMPLETED, AND IN SERVICE PRIOR TO CONSTRUCTION WORK.
2. FIRE HYDRANTS SHALL BE INSTALLED AND IN SERVICE PRIOR TO THE ACCUMULATION OF COMBUSTIBLES.
3. NO BURNING SHALL BE ALLOWED ON-SITE.
4. ALL PROJECTS MUST COMPLY WITH PASCO COUNTY FIRE HYDRANT ORDINANCE NO. 46-51.
5. PER NFPA-1, 18.3.4.1- CLEARANCES OF 7½ FEET IN FRONT OF AND TO THE SIDES OF THE FIRE HYDRANT WITH A FOUR-FOOT CLEARANCE TO THE REAR MUST BE MAINTAINED AT ALL TIMES.
6. GATED ENTRIES REQUIRE A SIREN OPERATING SYSTEM OR A 3M OPTICOM SYSTEM FOR EMERGENCY ACCESS.
7. THERE ARE NO FIRE HYDRANTS LOCATED ON-SITE OR CLOSE TO THE SITE ENTRANCE ALONG U.S. HIGHWAY 41 TO SERVE THE SITE IN CASE OF FIRE. PROPERTY OWNER WILL MOUNT FIRE EXTINGUISHERS ON THE OUTSIDE OF THE BUILDING EVERY 75 FT. MIN. FOR FIRE PROTECTION AS PER PREVIOUS DISCUSSION WITH COUNTY.

PROJECT IS LOCATED IN FLOOD ZONE X ACCORDING TO FEMA F.I.R.M. COMMUNITY PANEL NO: 12101C0404F DATED 09/26/14

Elevations based on The National Geodetic Vertical Datum of 1929 (NVGD 29)

HAMILTON
ENGINEERING & SURVEYING INC
3409 W. LEMON STREET
TAMPA, FL 33609
LB #7013 CA #8474
TEL (813) 250-3535
FAX (813) 250-3636

PRELIMINARY SITE PLAN

RECREATION ALTERNATIVE, LLC.
2840 LAND O' LAKES BLVD.
PASCO COUNTY, FLORIDA

SHEET TITLE:

NO.	DATE	REVISION

HEATHER E. WERTZ, PE

DRAWN BY: SANDOVAL | CHECKED BY: BURBANK
JOB #: 03177.0001
SEC TWP RNG: 25/26S/18E
DATE: 01/09/2015

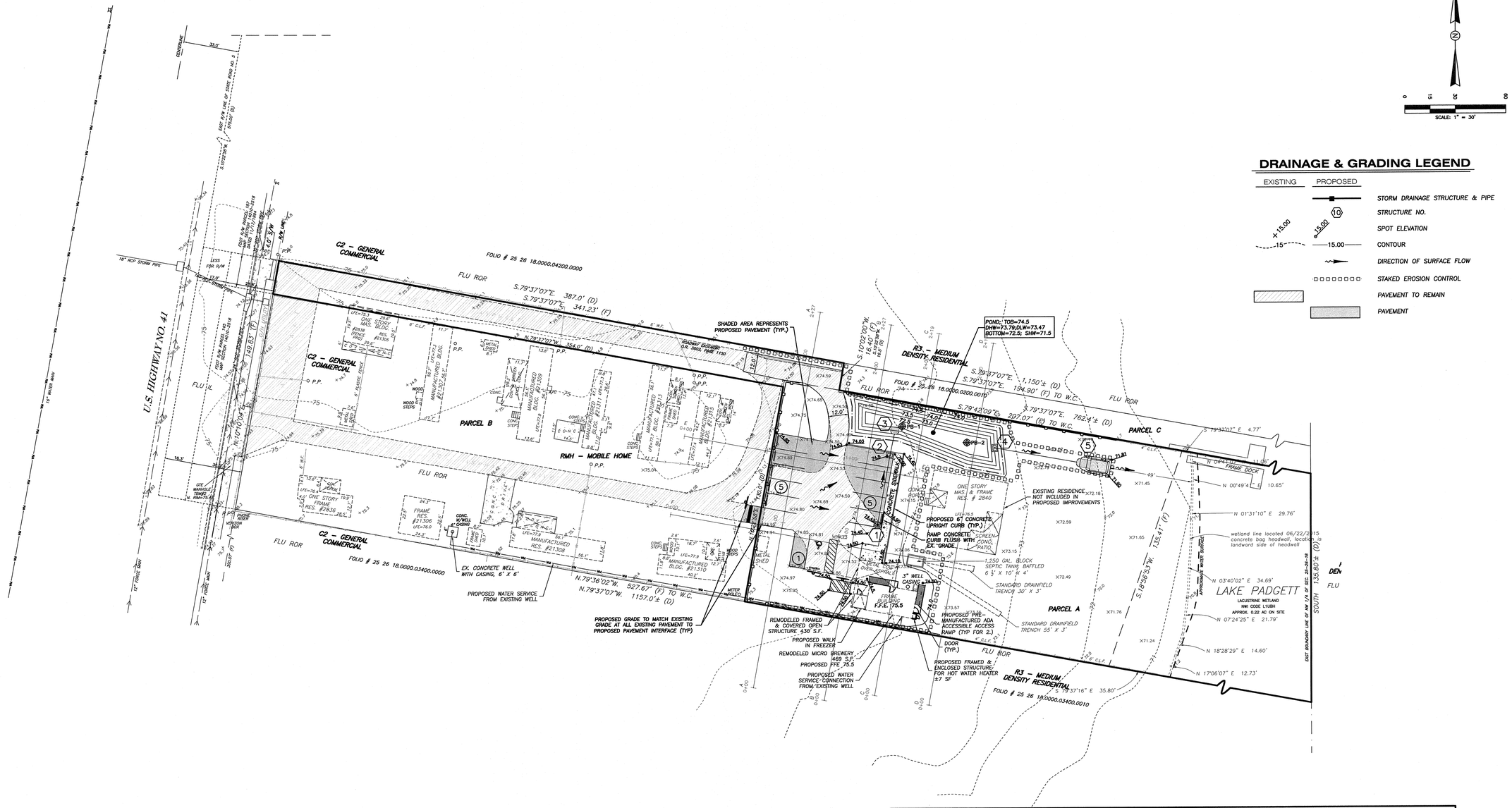

STRUCTURE			LINE							STRUCTURE LOCATION & REMARKS
NO.	TYPE & SIZE	TOP ELEV.	TYPE	DIAM. INCHES	LENGTH FEET	SLOPE %	INVERT ELEV. UPPER END	INVERT ELEV. LOWER END	FALL IN FEET	
1	TYPE C GRATE TOP INLET	74.42	RCP	12	42	0.36	72.70	72.55	0.15	HGL=72.93
2	TYPE C GRATE TOP INLET	74.50	RCP	12	13	0.38	72.55	72.50	0.05	HGL=72.88
3	MITERED END SECTION									HGL=72.82
4	CONTROL STRUCTURE	73.79	RCP	15	50	0.58	71.54	71.25	0.29	HGL=71.55
5	MITERED END SECTION									HGL=71.50

NOTE:

ALL GRATE TOP INLETS TO BE TRAFFIC BEARING

PROJECT IS LOCATED IN FLOOD ZONE X ACCORDING TO FEMA F.I.R.M. COMMUNITY PANEL NO: 12101C0404F DATED 09/26/14

Elevations based on The National Geodetic Vertical Datum of 1929 (NVGD 29)

HAMILTON
ENGINEERING & SURVEYING INC
3405 W. LEMON STREET
TAMPA, FL 33609
TEL (813) 250-3535
FAX (813) 250-3536
LB #7013 CA #8474

SHEET TITLE: GRADING & DRAINAGE PLAN

RECREATION ALTERNATIVE, LLC.
2840 LAND O' LAKES BLVD.
PASCO COUNTY, FLORIDA

NO.	DATE	REVISION

HEATHER L. BURBANK PE LICENSE NUMBER 72 STATE OF FLORIDA PROFESSIONAL ENGINEER AUGUST 14 2015

DRAWN BY: SANDOVAL
CHECKED BY: BURBANK
JOB #: 03177.0001
SEC TWP RNG: 25/26S/18E
DATE: 01/09/2015

5

J:\3001 To 3500\03177 Recreation Alternatives LLC\0001 - 2840 Land O Lakes Blvd\ENGR\1 DWGs\Construction\CG-101.dwg (GRADING & DRAINAGE PLAN) meghanb Aug 04, 2015 - 3:35pm

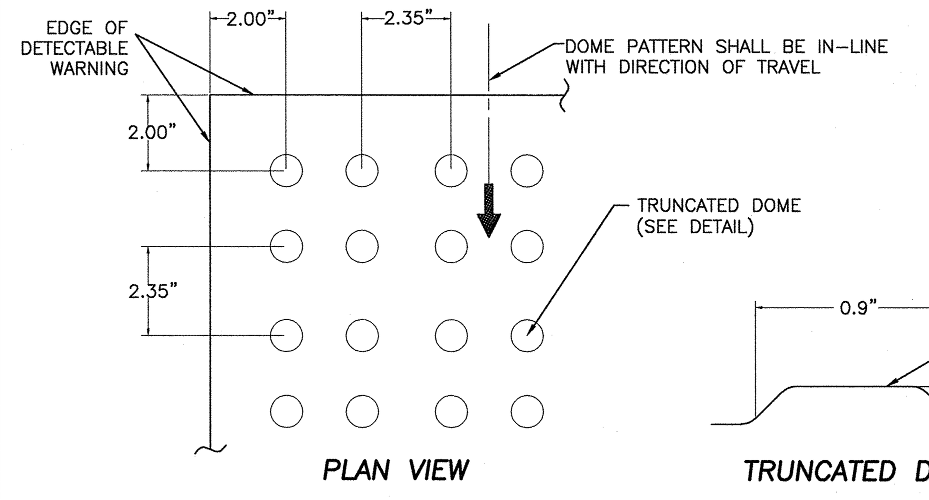

DETECTABLE WARNING

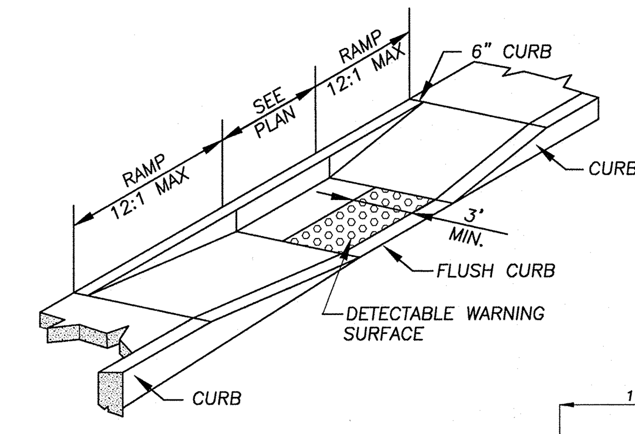

FLUSH RAMP DETAIL
SEE NOTE

NOTE:

RAMPS, FLARES & FLUSH WALKS SHALL HAVE A DETECTABLE WARNING SURFACE USING RAISED TRUNCATED DOMES AS DEPICTED IN THE FLORIDA ACCESSIBILITY CODE FOR BUILDING CONSTRUCTION (CHAPTER 11), LATEST EDITION. CONTRACTOR TO VERIFY REQUIREMENT WITH LOCAL BUILDING DEPARTMENT PRIOR TO CONSTRUCTION.

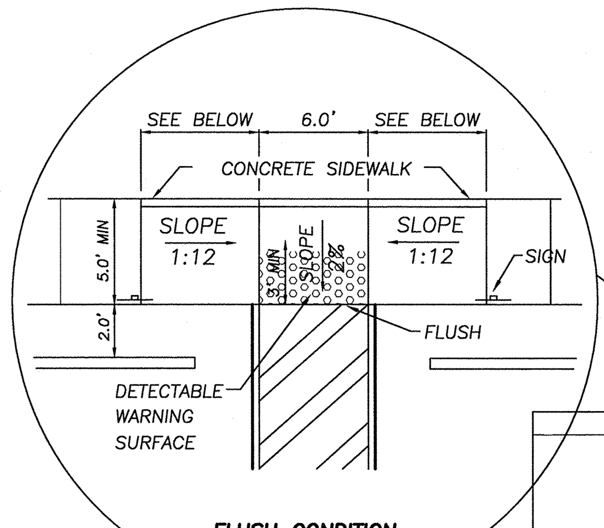

FLUSH CONDITION
SEE NOTE

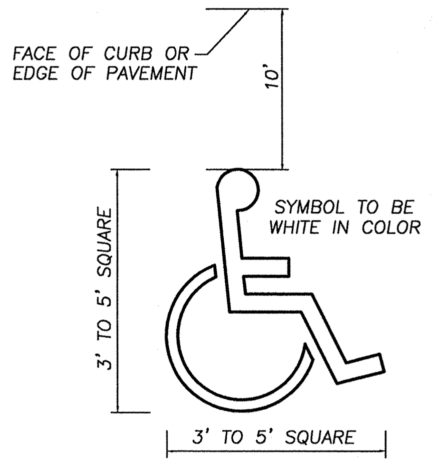

ACCESSIBLE SYMBOL DIMENSIONS

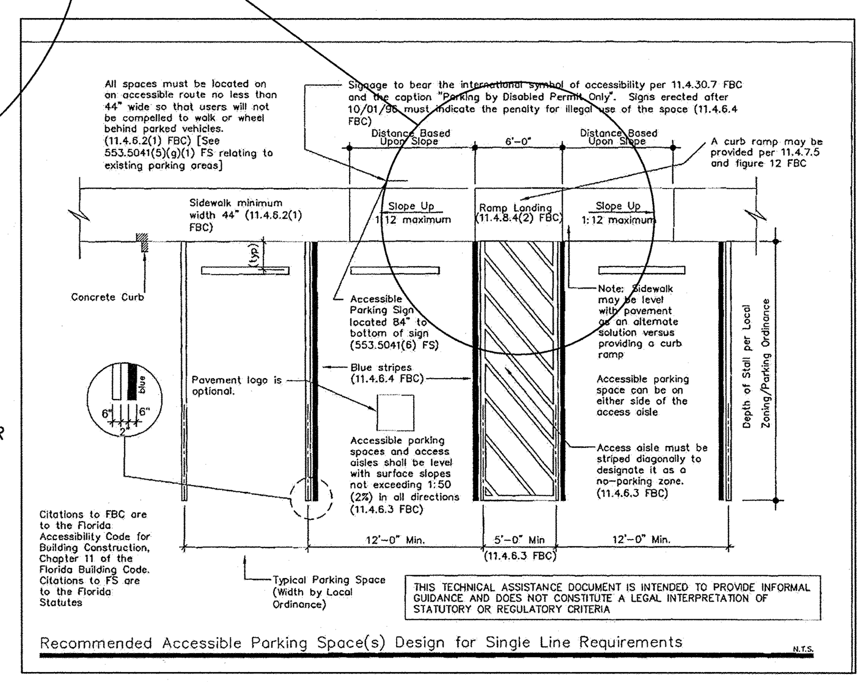

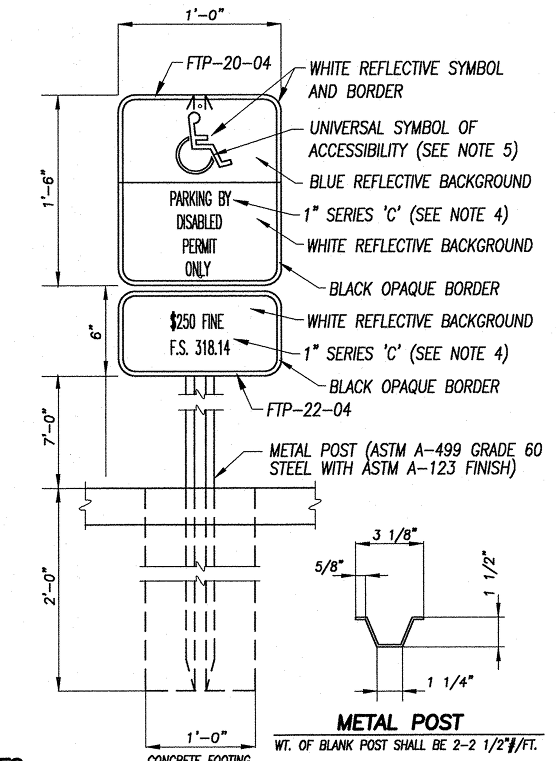

NOTES:

1. METAL POST TO BE GALVANIZED. ALL BOLTS, NUTS, WASHERS AND SCREWS MUST BE RUSTPROOF.
2. CONCRETE FOR FOOTING SHALL BE PORTLAND CEMENT AND HAVE A MINIMUM COMPRESSIVE STRENGTH OF 3,000 p.s.i.
3. SIGNS WILL BE FABRICATED BY USING REFLECTING COATING IN THE SYMBOL, MESSAGE AND BORDER APPLIED TO A SHEET ALUMINUM BACKING (.080) IN THICKNESS.
4. MESSAGE LETTERING SHALL BE UPPER CASE (BLACK)(SERIES C) 1" HIGH IN ACCORDANCE WITH MANUAL ON UNIFORM TRAFFIC CONTROL DEVICES.
5. THE SYMBOL IS COMPOSED OF TWO ELEMENTS, A WHITE WHEELCHAIR FIGURE (WHICH SHOULD ALWAYS FACE RIGHT) ON A BACKGROUND, UNIVERSAL BLUE (SHADE 15180 OF FED. STD. 595A) IN COLOR.
6. SIGN POST SHALL BE MIN. 2'-0" CLEAR FROM BACK OF CURB.

ACCESSIBLE SIGN & POST DETAIL

PER FDOT INDEX #17346-10

ACCESSIBLE PARKING / RAMPS SETUP

N.T.S.

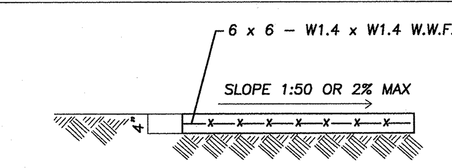

NOTES:

1. ALL CONCRETE IS TO BE 3000 P.S.I.
2. GROUND IS TO BE COMPACTED PRIOR TO POURING (TOP 6" @ 95% MOD. PROCTOR).
3. ALL EXPOSED EDGES TO BE CHAMFERED.
4. WHERE SIDEWALK ABUTS PAVEMENT THICKEN TO 1' OVER 8".
5. FIBER MESH REINFORCEMENT MAY BE USED IN LIEU OF WIRE MESH. USE 1.5 POUNDS PER CUBIC YARD TYPE III SYNTHETIC FIBER (ASTM C1116–95)

TYP. SIDEWALK SECTION

N.T.S.

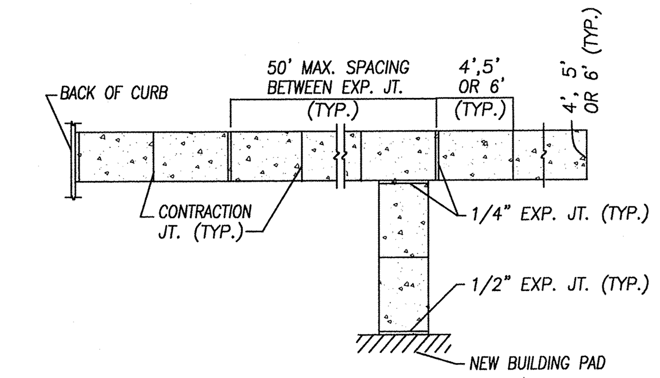

NOTES:

1. ALL SIDEWALKS SHALL BE 4" THICK, 3000 PSI, FIBER MESH REINFORCEMENT MAY BE USED IN LIEU OF WIRE MESH. USE 1.5 POUNDS PER CUBIC YARD TYPE III SYNTHETIC FIBER (ASTM C1116–95).
2. CONTRACTION JOINTS SHALL BE SPACED @ 4' INTERVALS FOR 4' SIDEWALKS, 5' INTERVALS FOR 5' SIDEWALKS AND 6' INTERVALS FOR 6'–0" SIDEWALKS.
3. FOR 10' SIDEWALKS, SPACE CONTRACTION JOINTS AT 5'–0"INTERVALS AND A LONGITUDINAL CONTRACTION JOINT IN THE CENTERLINE OF SIDEWALK.
4. CONTRACTION JOINTS SHALL BE 1" DEEP AND EDGED WITH 1/8" RADIUS.
5. 1/2" EXPANSION MATERIAL REQUIRED WHERE CONCRETE SIDEWALK ABUT CONCRETE STRUCTURE, CURB OR PAVEMENT.
6. A LAYER OF 15# FELT IS REQUIRED BETWEEN WALK AND ADJACENT PARALLELING CONCRETE CURB.
7. ALL ACCESSIBLE ROUTES ARE TO BE IN STRICT ACCORDANCE WITH STATE OR FEDERAL ADA REQUIREMENTS, WHICHEVER IS STRICTER.

TYPICAL SIDEWALK LAYOUT

N.T.S.

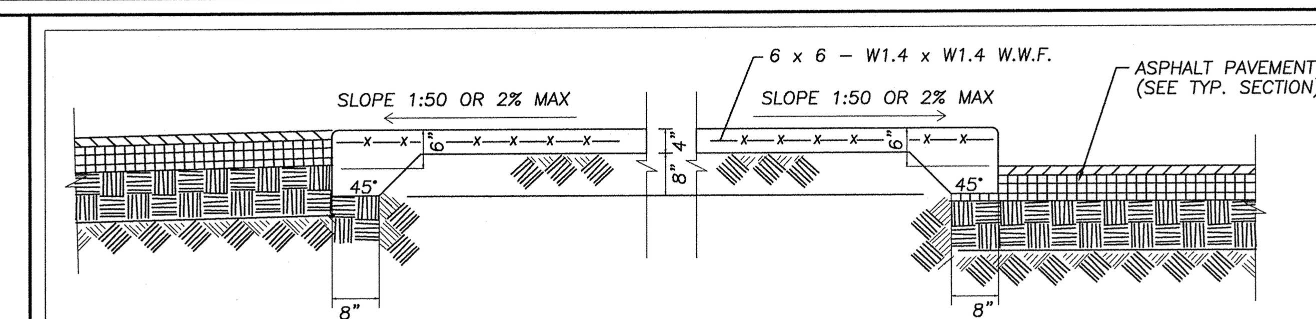

NOTES:

1. ALL CONCRETE IS TO BE 3000 P.S.I.
2. GROUND IS TO BE COMPACTED PRIOR TO POURING (TOP 6" @ 95% MOD. PROCTOR).
3. ALL EXPOSED EDGES TO BE CHAMFERED.
4. WHERE SIDEWALK ABUTS PAVEMENT THICKEN TO 1' OVER 8" AS SHOWN.
5. FIBER MESH REINFORCEMENT MAY BE USED IN LIEU OF WIRE MESH. USE 1.5 POUNDS PER CUBIC YARD TYPE III SYNTHETIC FIBER (ASTM C1116–95).
6. PROVIDE 4" MINIMUM BASE COURSE UNDER THICKENED SIDEWALK EDGE.

TYP. INTEGRAL SIDEWALK/CURB SECTION

N.T.S.

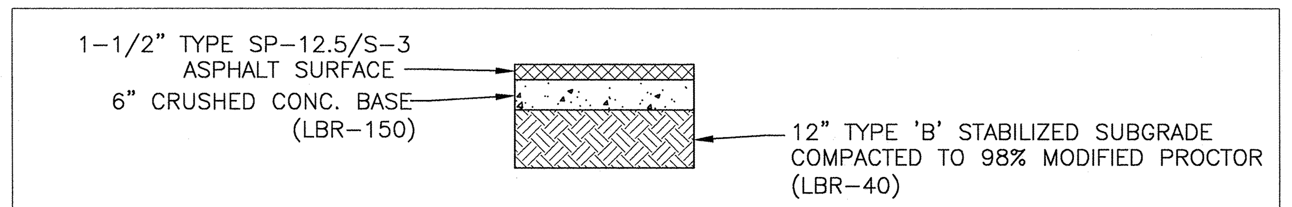

PAVEMENT DESIGN

N.T.S.

PROVIDED STRUCTURE NUMBER CALCULATIONS =

0.44 – TYPE SP-12.5/S-3
0.18 – COMPACTED LIMEROCK (LBR-100)
0.08 – TYPE 'B' STABILIZED SUBGRADE (LBR-40)

STRUCTURAL NUMBER =
(0.44)(1.5") + (0.18)(6") + (0.08)(12") = 2.70

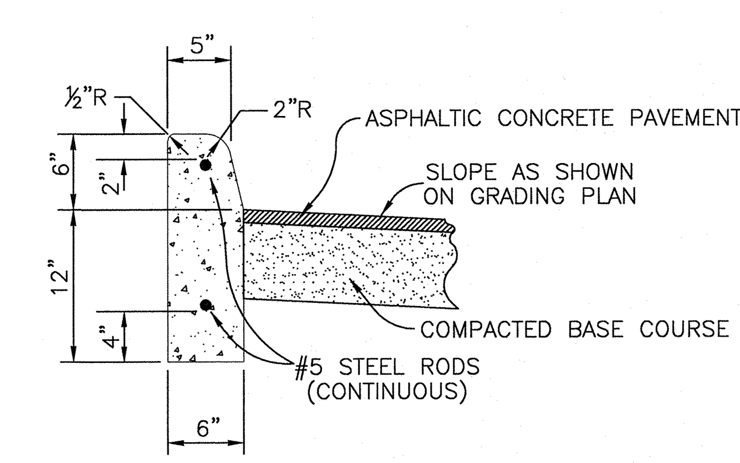

CONC. UPRIGHT CURB

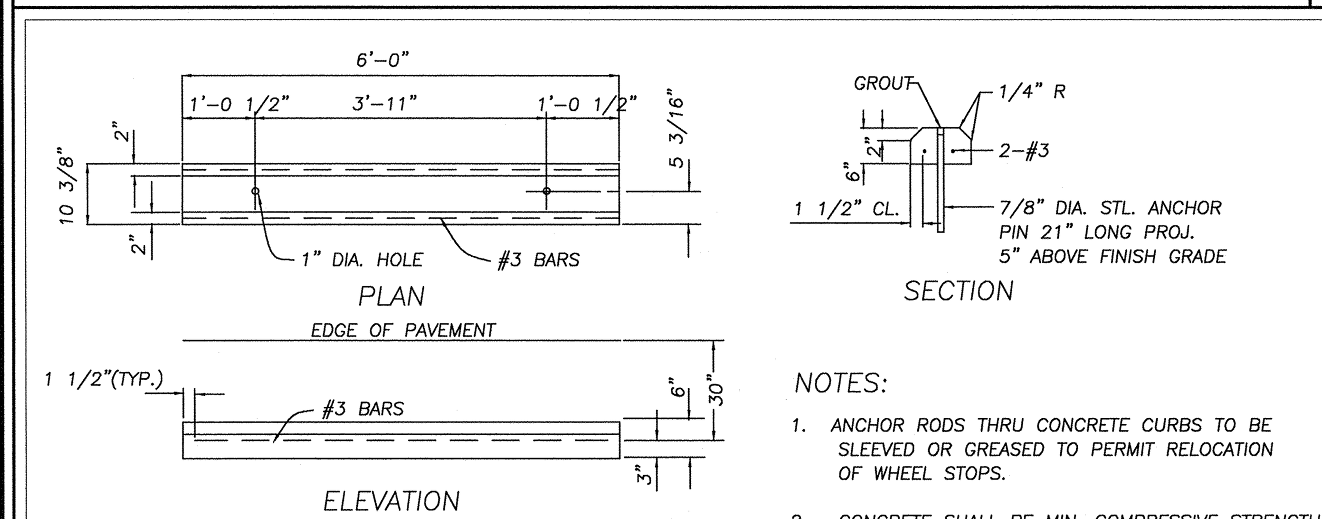

NOTES:

1. ANCHOR RODS THRU CONCRETE CURBS TO BE SLEEVED OR GREASED TO PERMIT RELOCATION OF WHEEL STOPS.
2. CONCRETE SHALL BE MIN. COMPRESSIVE STRENGTH OF 3,000 PSI, IN ACCORDANCE WITH ASTM C341.

CONCRETE WHEELSTOP

N.T.S.

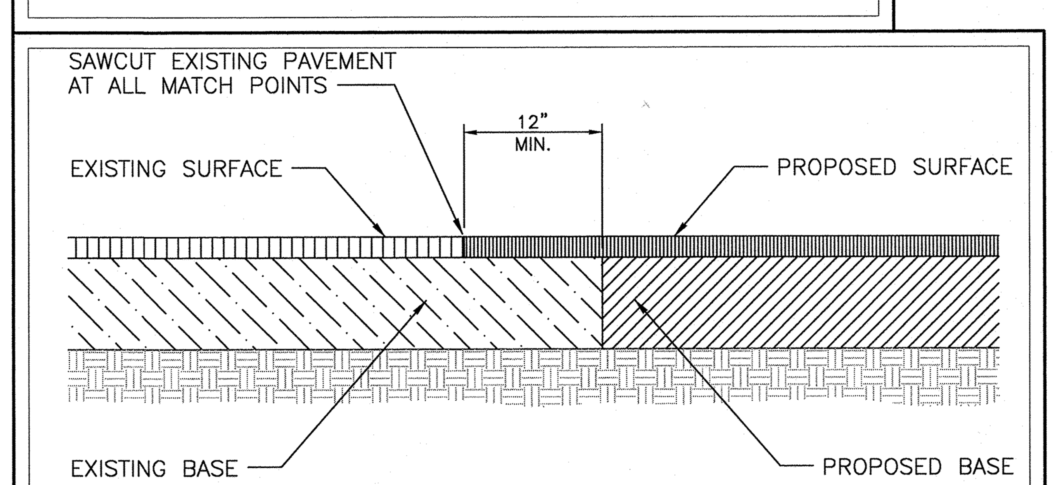

TIE-IN OF PROPOSED CONSTRUCTION TO EXISTING

NOT TO SCALE

MINIMUM TESTING (PRIVATE SYSTEMS ONLY)

EARTHWORK/COMPACTION:

QUALITY CONTROL TESTING DURING CONSTRUCTION: ALLOW TESTING SERVICE TO INSPECT AND APPROVE EACH SUBGRADE AND FILL LAYER BEFORE FURTHER BACKFILL OR CONSTRUCTION WORK IS PERFORMED. RECOMMENDED TESTING IS AS FOLLOWS:

ONE FIELD DENSITY TEST, IN ACCORDANCE WITH ASTM D 1556, WILL BE PERFORMED PER 5,000 SQUARE FEET FOR ASPHALT OR CONCRETE PARKING/LOADING AREAS AND DRIVES.

ONE FIELD DENSITY TEST, IN ACCORDANCE WITH ASTM D 1556, WILL BE PERFORMED AROUND EACH MANHOLE OR INLET.

ONE FIELD DENSITY TEST, IN ACCORDANCE WITH ASTM D 1556, WILL BE PERFORMED PER 100 FEET OF TRENCHED UTILITIES FOR EACH LIFT. THERE SHALL BE A MINIMUM OF ONE TEST BETWEEN STRUCTURES.

FILL MATERIAL: MAKE AT LEAST ONE FIELD DENSITY TEST FOR EACH 2,000 SQUARE FEET OF FILL MATERIAL, BUT IN NO CASE LESS THAN FOUR TESTS. TESTS SHALL BE PERFORMED FOR EACH LIFT OF FILL.

IF IN OPINION OF ENGINEER, BASED ON TESTING SERVICE REPORTS AND INSPECTION, SUBGRADE OF FILLS WHICH HAVE BEEN PLACED ARE BELOW SPECIFIED DENSITY, PROVIDE ADDITIONAL COMPACTION AND TESTING AT NO ADDITIONAL CHARGE TO THE OWNER.

WATER/FORCE MAIN SYSTEMS:

WATER DISTRIBUTION SYSTEM AND WASTEWATER FORCE MAIN PIPE INSTALLED BELOW GRADE AND OUTSIDE BUILDING SHALL BE TESTED IN ACCORDANCE WITH FOLLOWING PROCEDURES:

PERFORM THE TESTING OF PIPE MATERIALS, JOINTS, AND/OR OTHER MATERIALS INCORPORATED INTO THE CONSTRUCTION OF WATER MAINS AND FORCE MAINS TO DETERMINE LEAKAGE AND WATERTIGHTNESS. ALL PRESSURE PIPELINE SHALL BE TESTED IN ACCORDANCE WITH SECTION 4 OF AWWA C600 LATEST EDITION. IN THE EVENT ANY STATE OR LOCAL CODE REQUIRES A MORE STRINGENT TEST, THE MORE STRINGENT SHALL APPLY.

PRESSURE TEST: AFTER THE PIPE HAS BEEN LAID, ALL NEWLY LAID PIPE OR ANY VALVED SECTION THEREOF SHALL BE SUBJECTED TO A HYDROSTATIC PRESSURE OF AT LEAST 1.5 TIMES THE WORKING PRESSURE AT THE POINT OF TESTING AND NOT LESS THAN 1.25 TIMES THE WORKING PRESSURE AT THE HIGHEST POINT ALONG THE TEST SECTION.

LEAKAGE TEST: THE LEAKAGE TEST SHALL BE CONDUCTED CONCURRENTLY WITH THE PRESSURE TEST. LEAKAGE IS DEFINED AS THE QUANTITY OF WATER THAT MUST BE SUPPLIED INTO THE NEWLY LAID PIPELINE, OR ANY VALVED SECTION THEREOF, TO MAINTAIN PRESSURE WITHIN 5 PSI OF THE SPECIFIED TEST PRESSURE AFTER THE AIR IN THE PIPELINE HAS BEEN EXPELLED AND THE PIPELINE HAS BEEN FILLED WITH WATER. LEAKAGE SHALL NOT BE MEASURED BY A DROP IN PRESSURE IN A TEST SECTION OVER A PERIOD OF TIME. NO PIPELINE INSTALLATION WILL BE ACCEPTED IF THE LEAKAGE IS GREATER THAN THAT DETERMINED BY THE FOLLOWING FORMULA:

$$L = \frac{SDP}{133,200}$$

L = ALLOWABLE LEAKAGE, (GALLONS PER HOUR)

S = LENGTH OF PIPE TESTED, (FEET)

D = NOMINAL DIAMETER OF PIPE, (INCHES)

P = AVERAGE TEST PRESSURE DURING TEST, (PSIG)

VISIBLE LEAKAGE: ALL VISIBLE LEAKS SHALL BE REPAIRED REGARDLESS OF THE AMOUNT OF LEAKAGE.

ACCEPTANCE OF INSTALLATION: IF ANY TEST OF PIPE LAID IN PLACE DISCLOSES LEAKAGE GREATER THAN THAT SPECIFIED, THE CONTRACTOR SHALL, AT HIS OWN EXPENSE, LOCATE THE LEAK AND MAKE REPAIRS AS NECESSARY UNTIL THE LEAKAGE IS WITHIN THE SPECIFIED ALLOWANCE. CONTRACTOR SHALL SUPPLY ALL WATER FOR TESTING AT NO ADDITIONAL COST TO THE OWNER.

PROVIDE ONE COPY OF RESULTS OF HYDROSTATIC PRESSURE TEST TO ENGINEER (AND UTILITY COMPANY AS NECESSARY) UPON COMPLETION OF WATER DISTRIBUTION/WASTEWATER FORCE MAIN BACKFILLING OPERATIONS.

ADJUSTING AND CLEANING (WATER DISTRIBUTATION ONLY): DISINFECT DISTRIBUTION SYSTEM WITH CHLORINE BEFORE ACCEPTANCE FOR DOMESTIC OPERATION. AMOUNT OF CHLORINE SHALL BE SUCH AS TO PROVIDE DOSAGE OF NOT LESS THAN 50 PARTS/MILLION. THOROUGHLY FLUSH LINES BEFORE INTRODUCTION OF CHLORINATING MATERIALS AND AFTER CONTACT PERIOD OF NOT LESS THAN 24 HOURS, SYSTEM SHALL BE FLUSHED WITH CLEAN WATER UNTIL RESIDUAL CHLORINE CONTENT IS NOT GREATER THAN 1.0 PART/MILLION. OPEN AND CLOSE VALVES IN LINES BEING DISINFECTED SEVERAL TIMES DURING CONTACT PERIOD. AFTER DISINFECTION, TAKE TWO CONSECUTIVE DAYS OF WATER SAMPLES AND BACTERIOLOGICAL TESTS IN ACCORDANCE WITH AWWA SPECIFICATIONS. PROVIDE ONE COPY OF RESULTS OF BACTERIOLOGICAL TESTS (W/RESIDUAL CHLORINE LEVELS) TO ENGINEER (AND UTILITY COMPANY AS NECESSARY) UPON COMPLETION. DO NOT PLACE DISTRIBUTION SYSTEM IN SERVICE UNTIL APPROVAL IS OBTAINED FROM APPLICABLE GOVERNING AUTHORITIES (AS NECESSARY).

GRAVITY SANITARY SEWER:

TESTING: PERFORM TESTING OF COMPLETED PIPING IN ACCORDANCE WITH LOCAL AUTHORITIES HAVING JURISDICTION. ALL PIPES SHALL BE CLEANED BY FLUSHING WITH WATER PRIOR TO TESTING. A HIGH VELOCITY JET OR OTHER METHODS MAY BE NECESSARY.

VISUAL TESTING OF GRAVITY LINES SHALL BE PERFORMED BY LAMPING TO VERIFY ACCURACY OF ALIGNMENT, PIPE DEFLECTION AND FREEDOM FROM DEBRIS AND OBSTRUCTION. THE FULL DIAMETER OF THE PIPE SHOULD BE VISIBLE WHEN VIEWED BETWEEN CONSECUTIVE MANHOLES. ANY FAILED PIPE SECTION LOCATIONS SHALL BE REPORTED TO THE ENGINEER. FAILED PIPE SECTIONS SHALL BE REPAIRED OR REPLACED AND RETESTED UNTIL WITHIN SPECIFIED ALLOWANCES AS DIRECTED BY THE ENGINEER.

EXFILTRATION OR LEAKAGE TESTING OF GRAVITY LINES SHALL BE PERFORMED BY BULKHEADING THE SEWER UNDER TEST AT THE MANHOLE AT THE LOWEST END AND FILLING THE SEWER WITH CLEAR WATER UNTIL THE WATER IS UP A MINIMUM OF TWO FEET ABOVE THE CLEANOUT AT THE HIGHEST POINT IN THE SYSTEM, OR TO THE CROWN OF THE MANHOLE AT THE HIGHEST POINT IN THE SYSTEM. LEAKAGE WILL BE THE MEASURED AMOUNT OF WATER ADDED TO MAINTAIN THE LEVEL IN THE HIGHEST END STRUCTURE. TESTS SHALL BE CARRIED ON A MINIMUM OF FOUR HOURS WITH READINGS AT 30-MINUTE INTERVALS. THE QUANTITY OF LEAKAGE FOR ANY SECTION OF THE SEWER SHALL NOT EXCEED 50 GALLONS/MILE OF PIPE/DAY/INCH PIPE DIAMETER.

INFILTRATION TESTING OF GRAVITY LINES SHALL BE PERFORMED WHEN THE GROUNDWATER LEVEL IS A MINIMUM OF TWO FEET ABOVE THE CROWN OF THE SEWER AT THE HIGHEST POINT IN THE TEST SECTION. INFILTRATION TESTS WILL BE MADE BY MEASURING THE INFILTRATED AMOUNT OF WATER AT A TEMPORARY BULKHEAD SET UP IN THE LAST INVERT OF THE SEWER SYSTEM. THE BULKHEAD SHALL BE PULLED AND THE INFILTRATED WATER COLLECTED AND MEASURED. TESTS SHALL BE CARRIED ON A MINIMUM OF FOUR HOURS. THE QUANTITY OF INFILTRATED WATER FOR ANY SECTION OF THE SEWER SHALL NOT EXCEED 50 GALLONS/MILE OF PIPE/DAY/INCH PIPE DIAMETER.

STORMWATER SYSTEMS:

TESTING: PERFORM VISUAL TESTING OF COMPLETED PIPING ONLY. ALL PIPES SHALL BE CLEANED BY FLUSHING WITH WATER PRIOR TO TESTING. A HIGH VELOCITY JET OR OTHER METHODS MAY BE NECESSARY. VISUAL TESTING BY LAMPING SHALL BE PERFORMED TO VERIFY ACCURACY OF ALIGNMENT, PIPE DEFLECTION AND FREEDOM FROM DEBRIS AND OBSTRUCTION. THE FULL DIAMETER OF THE PIPE SHOULD BE VISIBLE WHEN VIEWED BETWEEN CONSECUTIVE STRUCTURES. ANY FAILED PIPE SECTION LOCATIONS SHALL BE REPORTED TO THE ENGINEER. FAILED PIPE SECTIONS SHALL BE REPAIRED OR REPLACED AND RETESTED UNTIL WITHIN SPECIFIED ALLOWANCES AS DIRECTED BY THE ENGINEER.

ASPHALT PAVEMENT:

MINIMUM ONE TEST FOR EVERY 20,000 SQUARE FEET (OR AS RECOMMENDED BY THE PRIVATE TESTING COMPANY).

TEST IN-PLACE ASPHALT CONCRETE COURSES FOR COMPLIANCE WITH REQUIREMENTS FOR THICKNESS, COMPACTION AND SURFACE SMOOTHNESS. TEST EACH SOURCE OF ASPHALT CONCRETE MATERIAL FOR COMPLIANCE WITH FDOT SPECIFICATIONS. REPAIR OR REMOVE AND REPLACE UNACCEPTABLE PAVING AS RECOMMENDED BY DESIGN ENGINEER.

COMPACTION TEST PER FM 5-511.

THICKNESS TEST PER ASTM D 3549. IN-PLACE COMPACTED THICKNESS WILL NOT BE ACCEPTABLE IF EXCEEDING FOLLOWING ALLOWABLE VARIATION FROM REQUIRED THICKNESS:

BASE COURSE: 1/2", PLUS OR MINUS.

SURFACE COURSE: 1/4", PLUS OR MINUS.

SURFACE SMOOTHNESS: TEST FINISHED SURFACE OF EACH ASPHALT CONCRETE COURSE FOR SMOOTHNESS, USING 10' STRAIGHT EDGE APPLIED PARALLEL WITH, AND AT RIGHT ANGLES TO CENTERLINE OF PAVED AREA. SURFACES WILL NOT BE ACCEPTABLE IF EXCEEDING THE FOLLOWING TOLERANCES FOR SMOOTHNESS.

BASE COURSE SURFACE: 1/4".

WEARING COURSE SURFACE: 3/16".

PAVING BASE COURSE: PERFORM TESTING OF IN-PLACE BASE COURSES FOR COMPLIANCE WITH REQUIREMENTS FOR MOISTURE, THICKNESS AND DENSITY. TEST EACH SOURCE OF BASE MATERIAL FOR COMPLIANCE WITH FDOT SPECIFICATIONS. REPAIR OR REMOVE AND REPLACE UNACCEPTABLE PAVING AS RECOMMENDED BY DESIGN ENGINEER.

MOISTURE CONTENT TEST PER ASTM D 698.

MECHANICAL ANALYSIS TEST PER AASHTO T-88.

PLASTICITY INDEX TEST PER ASTM D 4318.

BASE MATERIAL THICKNESS TEST PER FDOT SPECIFICATIONS.

CONCRETE PAVEMENT:

FIELD DENSITY TEST PER ASTM D 1557.
TEST CONCRETE IN ACCORDANCE WITH ACI 318 TO VERIFY COMPLIANCE WITH MINIMUM DESIGN STRENGTHS. TAKE ONE SLUMP TEST, AIR TEST AND STRENGTH TEST FOR EACH DAYS POUR.

TEST SHALL CONSIST OF 3 CYLINDERS, OF WHICH ONE WILL BE TESTED AT 7 DAYS AND THE OTHER AT 28 DAYS. THE THIRD CYLINDER SHALL BE TESTED SHALL BE TESTED IN THE EVENT ANY OF THE OTHER TWO FAIL TO MEET THE SPECIFICATIONS.

HAMILTON
ENGINEERING & SURVEYING INC
3409 W. LEMON STREET
TAMPA, FL 33609
TEL (813) 250-3535
FAX (813) 250-3636
LB #7013 CA #8474

SHEET TITLE:

TYPICAL SITE DETAILS

RECREATION ALTERNATIVE, LLC.
2840 LAND O' LAKES BLVD.
PASCO COUNTY, FLORIDA

NO.	DATE	REVISION	BY

AUGUST 4, 2015

DRAWN BY: SANDOVAL | CHECKED BY: BURBANK

JOB #: 03177.0001

SEC TWP RNG: 25/26S/18E

DATE: 01/09/2015

J:\3001 To 3500\03177 Recreation Alternatives LLC\0001- 2840 Land O Lakes Blvd\ENGR\1 DWGs\Construction\CK-501.dwg (TYPICAL SITE DETAILS) meghanb Aug 04, 2015 - 3:35pm

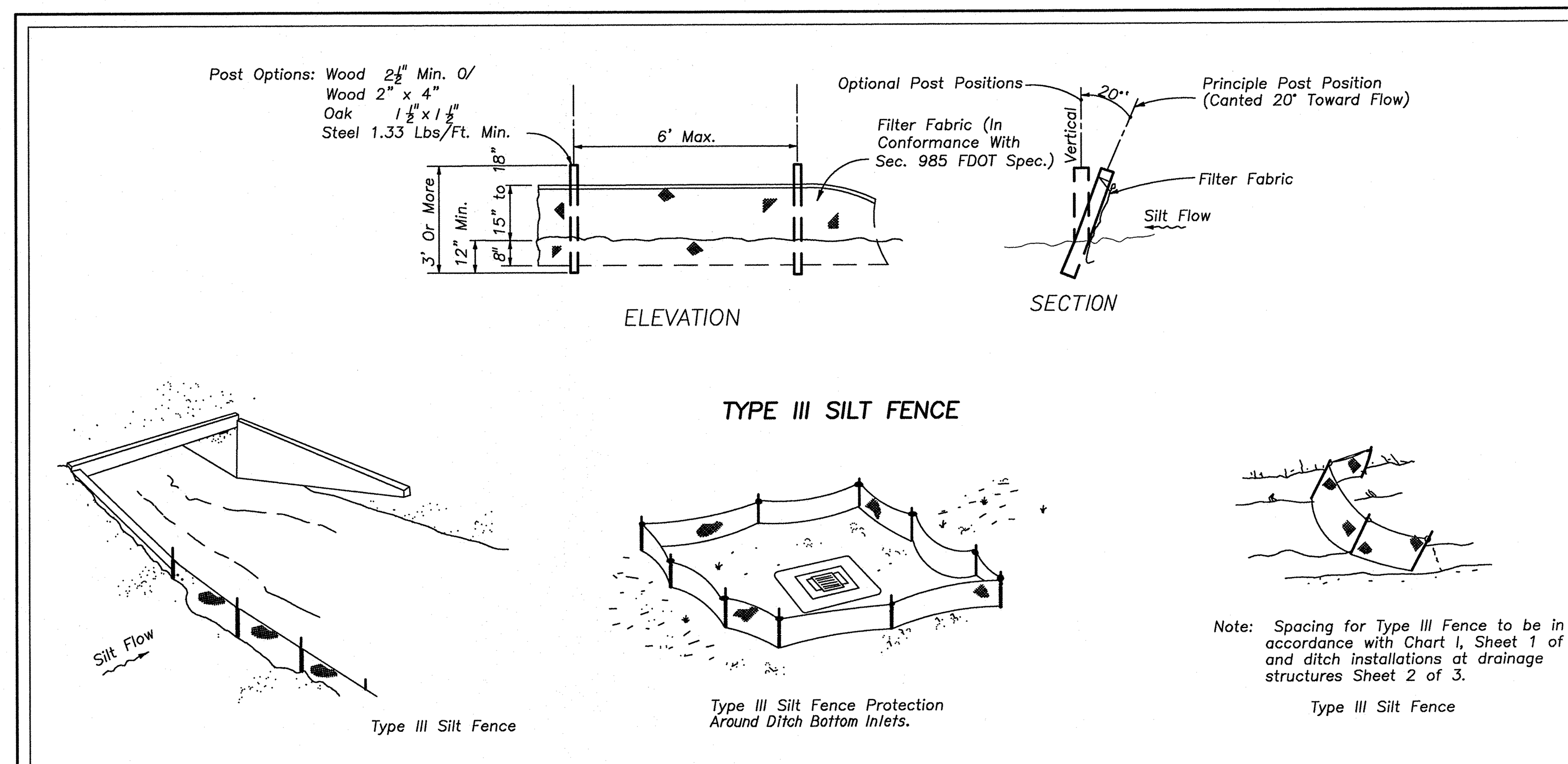

TYPE III SILT FENCE

Do not deploy in a manner that silt fences will act as a dam across permanent flowing watercourses. Silt fences are to be used at upland locations and turbidity barriers used at permanent bodies of water.

SILT FENCE APPLICATIONS

F.D.O.T. INDEX NO. 102

TEMPORARY EROSION CONTROL

N.T.S.

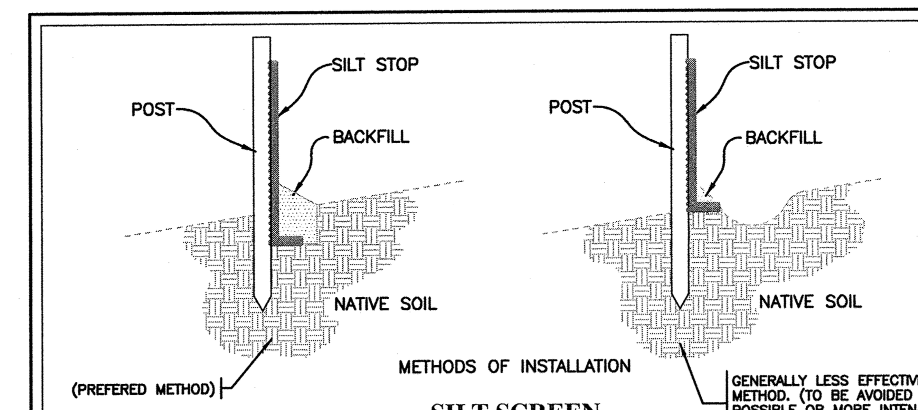

METHODS OF INSTALLATION

SILT SCREEN

N.T.S.

NOTE:
THE EROSION BARRIER, AS SHOWN, IS NOT TO BE CONSTRUED TO MEAN THAT IT IS ALL THAT MAY BE REQUIRED. THE CONTRACTOR IS TO TAKE WHATEVER MEASURES NECESSARY TO CONTROL EROSION THROUGHOUT THE PROJECT. EROSION CONTROL WILL BE INSTALLED PRIOR TO LAND CLEARING AND SHALL REMAIN IN PLACE UNTIL THE AREA IS STABILIZED. (SEE OTHER EROSION AND TURBIDITY NOTES ON THE GENERAL NOTES SHEET OF THIS PLAN.)

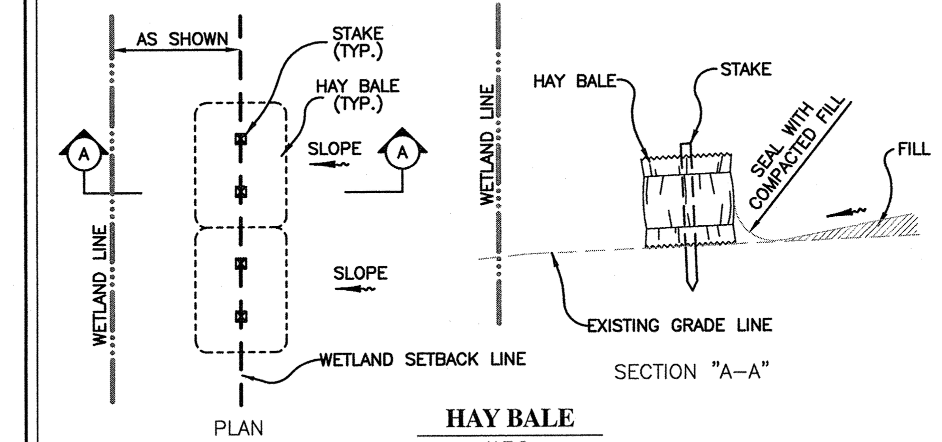

HAY BALE

N.T.S.

EROSION CONTROL DETAILS
EITHER METHOD OR A COMBINATION OF BOTH IS ACCEPTABLE

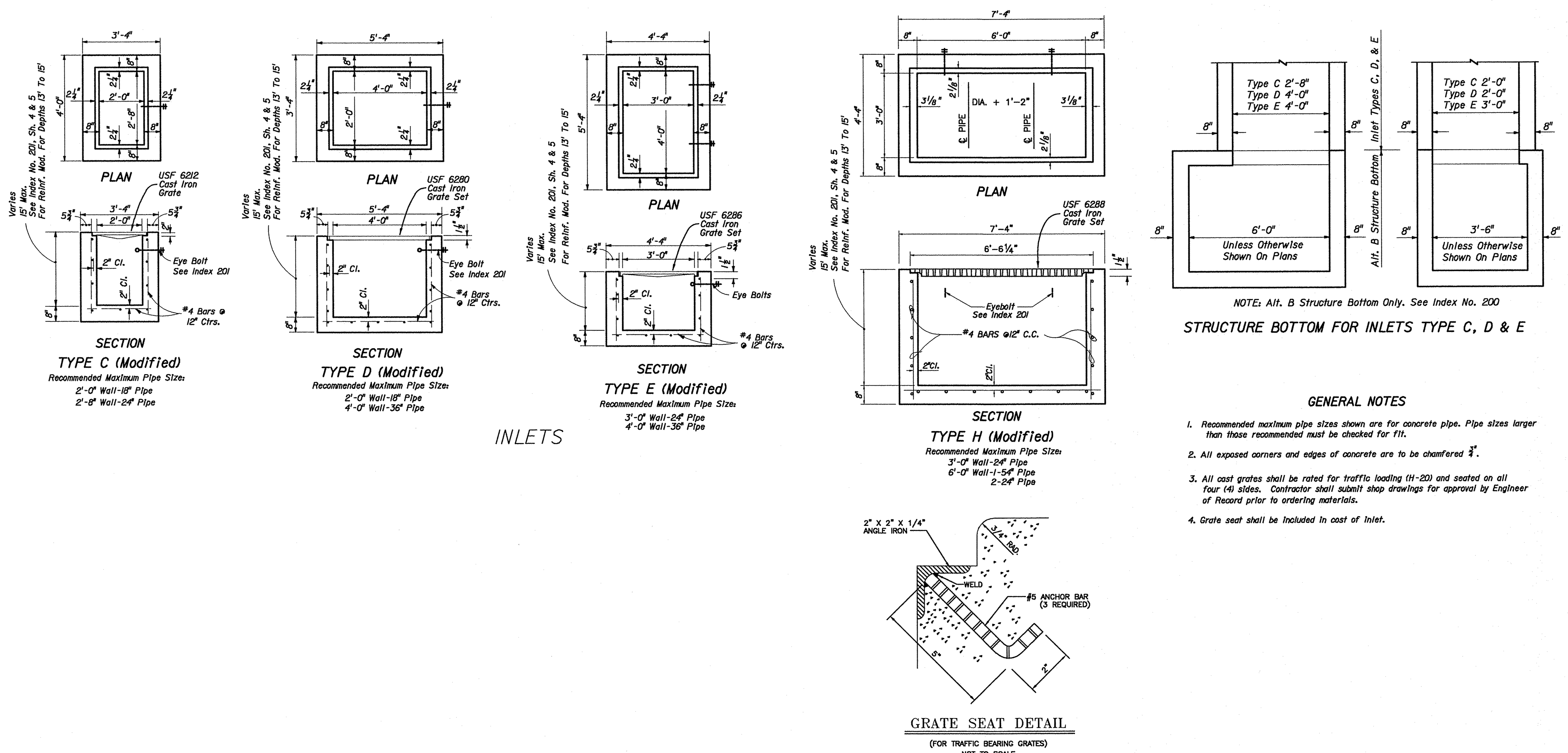

NOTE: Alt. B Structure Bottom Only. See Index No. 200

STRUCTURE BOTTOM FOR INLETS TYPE C, D & E

GENERAL NOTES

1. Recommended maximum pipe sizes shown are for concrete pipe. Pipe sizes larger than those recommended must be checked for fit.
2. All exposed corners and edges of concrete are to be chamfered ¾".
3. All cast grates shall be rated for traffic loading (H-20) and seated on all four (4) sides. Contractor shall submit shop drawings for approval by Engineer of Record prior to ordering materials.
4. Grate seat shall be included in cost of inlet.

GRATE TOP INLETS
TYPES C, D, E & H
DOT INDEX #232 (MODIFIED)

DIMENSIONS AND QUANTITIES

	D	X	A	B	C	E	F	G	H ■	M Single Pipe	M Double Pipe	M Triple Pipe	M Quad. Pipe	N	5½" Concrete Slab (CY) ◪ Single Pipe	Slab Double Pipe	Slab Triple Pipe	Slab Quad. Pipe	Sodding (SY) Single Pipe	Sodding Double Pipe	Sodding Triple Pipe	Sodding Quad. Pipe
1:2 Slope	15"	2'-7"	1.92'	2.18'	4.10'	2.06'	5'	1.22'	2.9'	4.63'	7.21'	9.79'	12.37'	1.19'	0.38	0.58	0.77	0.96	21	24	27	30
	18"	2'-10"	1.97'	2.74'	4.71'	2.56'	6'	1.41'	3.4'	4.92'	7.75'	10.58'	13.42'	1.21'	0.44	0.65	0.87	1.09	22	25	28	31
	24"	3'-5"	2.06'	3.85'	5.91'	3.56'	7'	1.73'	3.4'	5.50'	8.92'	12.33'	15.75'	1.25'	0.54	0.83	1.12	1.42	24	28	32	35
	30"	4'-3"	2.15'	4.95'	7.10'	4.56'	8'	2.00'	3.4'	6.08'	10.33'	14.58'	18.83'	1.29'	0.66	1.09	1.50	1.91	26	31	35	40
	36"	5'-1"	2.25'	6.08'	8.33'	5.56'	9'	2.24'	3.4'	6.67'	11.75'	16.83'	21.92'	1.33'	0.81	1.38	1.95	2.51	28	34	39	45
	42"	6'-0"	2.34'	7.21'	9.55'	6.56'	10'	2.45'	3.4'	7.25'	13.25'	19.25'	25.25'	1.38'	0.97	1.70	2.45	3.19	30	37	43	50
	48"	6'-9"	2.43'	8.33'	10.76'	7.56'	11'	2.65'	3.4'	7.83'	14.58'	21.33'	28.08'	1.42'	1.13	2.04	2.93	3.84	32	39	47	54
	54"	7'-8"	2.52'	9.44'	11.96'	8.56'	12'	2.83'	3.4'	8.42'	16.08'	23.75'	31.42'	1.46'	1.31	2.44	3.58	4.72	34	42	51	59
	60"	8'-6"	2.62'	10.56'	13.18'	9.56'	14'	3.00'	4.4'	9.00'	17.50'	26.00'	34.50'	1.50'	1.51	2.89	4.28	5.68	36	45	55	64
	66"	9'-2"	2.71'	11.68'	14.39'	10.56'	15'	3.18'	4.4'	9.58'	18.75'	27.92'	37.08'	1.54'	1.68	3.25	4.84	6.43	38	48	58	68
	72"	10'-0"	2.80'	12.80'	15.60'	11.56'	16'	3.30'	4.4'	10.16'	20.16'	30.16'	40.16'	1.58'	1.89	3.74	5.59	7.45	40	51	62	73
1:4 Slope	15"	2'-7"	2.27'	4.09'	6.36'	4.03'	8'	1.22'	4.0'	4.63'	7.21'	9.79'	12.37'	1.19'	0.57	0.87	1.15	1.44	23	26	29	32
	18"	2'-10"	2.36'	5.12'	7.48'	5.03'	9'	1.41'	4.0'	4.92'	7.75'	10.58'	13.42'	1.21'	0.66	0.99	1.31	1.65	25	28	31	35
	24"	3'-5"	2.53'	7.18' △	9.71'	7.03' △	11'	1.73'	4.0'	5.50'	8.92'	12.33'	15.75'	1.25'	0.85	1.30	1.75	2.20	28	32	36	40
	30"	4'-3"	2.70'	9.25'	11.95'	9.03'	13'	2.00'	4.0'	6.08'	10.33'	14.58'	18.83'	1.29'	1.10	1.74	2.39	3.05	31	36	41	46
	36"	5'-1"	2.87'	11.31' ◇	14.18'	11.03' ◇	15'	2.24'	4.0'	6.67'	11.75'	16.83'	21.92'	1.33'	1.32	2.21	3.08	3.96	34	40	46	52
	42"	6'-0"	3.05'	13.37'	16.42'	13.03'	17'	2.45'	4.0'	7.25'	13.25'	19.25'	25.25'	1.38'	1.58	2.76	3.91	5.09	38	44	51	58
	48"	6'-9"	3.22'	15.43'	18.65'	15.03'	19'	2.65'	4.0'	7.83'	14.58'	21.33'	28.08'	1.42'	1.85	3.30	4.73	6.17	41	48	56	63
	54"	7'-8"	3.39'	17.49'	20.88'	17.03'	21'	2.83'	4.0'	8.42'	16.08'	23.75'	31.42'	1.46'	2.14	3.95	5.77	7.58	44	52	61	69
	60"	8'-6"	3.56'	19.55'	23.11'	19.03'	23'	3.00'	4.0'	9.00'	17.50'	26.00'	34.50'	1.50'	2.45	4.66	6.87	9.07	47	56	66	75
	66"	9'-2"	3.73'	21.62'	25.35'	21.03'	25'	3.18'	4.0'	9.58'	18.75'	27.92'	37.08'	1.54'	2.88	5.54	8.18	10.84	49	59	69	80
	72"	10'-0"	3.91'	23.68'	27.59'	23.03'	27'	3.30'	4.0'	10.16'	20.16'	30.16'	40.16'	1.58'	3.54	6.61	9.87	13.13	52	63	74	85

◪ See General Note No. 5.
See Sheet 5 For 3" Slab Quantities

■ Values shown for estimating pipe quantities and are for information only.

	B	E	
△	6.42'	6.25'	Dimensions permitted to allow use of 8' standard pipe lengths.
◇	10.40'	10.10'	Dimensions permitted to allow use of 12' standard pipe lengths.

△ ◇ Concrete slab shall be deepened to form bridge across crown of pipe. See section below.

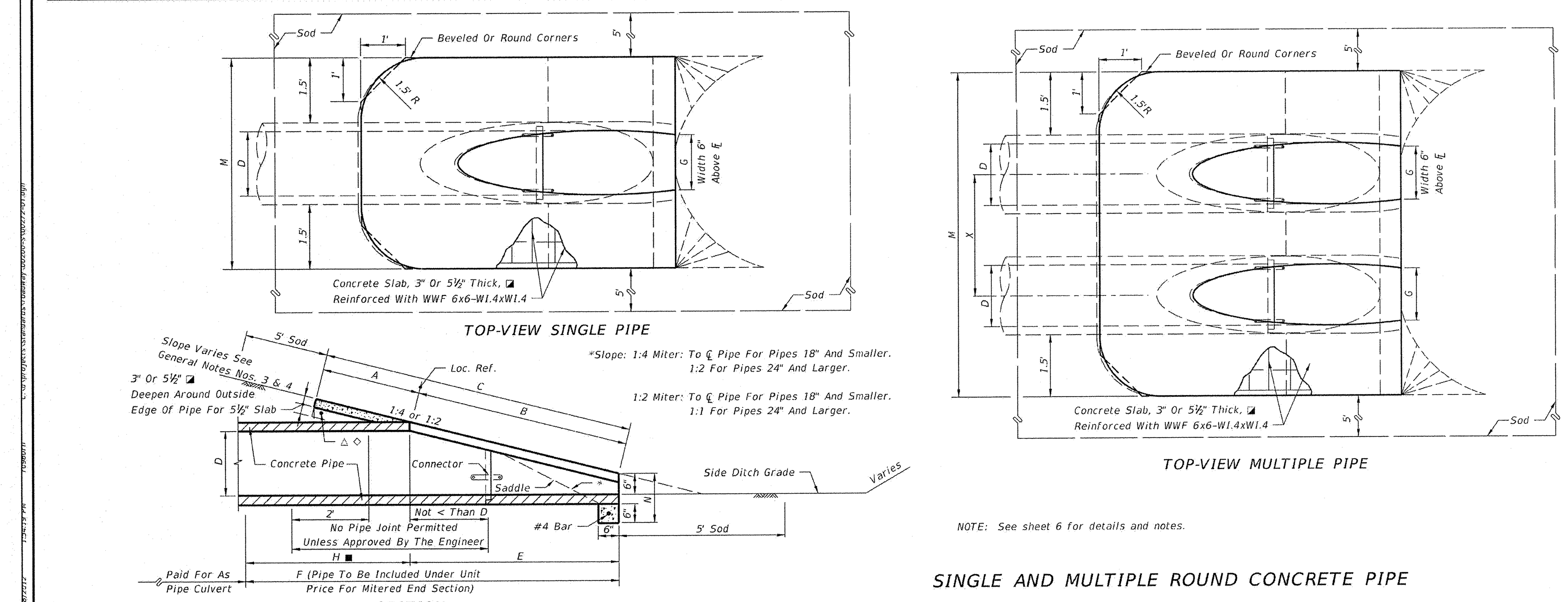

SINGLE AND MULTIPLE ROUND CONCRETE PIPE

LAST REVISION	REVISION	DESCRIPTION:	FDOT DESIGN STANDARDS 2013	CROSS DRAIN MITERED END SECTION	INDEX NO.	SHEET NO.
02					272	1

HAMILTON
ENGINEERING & SURVEYING INC
3409 W. LEMON STREET
TAMPA, FL 33609
TEL (813) 250-3535
FAX (813) 250-3636
LB #7013 CA #8474

SHEET TITLE: TYPICAL SITE & DRAINAGE DETAILS

RECREATION ALTERNATIVE, LLC.
2840 LAND O' LAKES BLVD.
PASCO COUNTY, FLORIDA

NO.	DATE	REVISION	BY

HEATHER E. WERTZ, PE
LIC# 52691
AUGUST 4, 2015

DRAWN BY: SANDOVAL
CHECKED BY: BURBANK
JOB #: 03177.0001
SEC TWP RNG: 25/26S/18E
DATE: 01/09/2015

J:\3001 To 3500\03177 Recreation Alternatives LLC\0001- 2840 Land O Lakes Blvd\ENGR\DWGs\Construction\CX-502.dwg (TYPICAL SITE & DRAINAGE DETAILS) megborb Aug 04, 2015 - 3:35pm

CONTROL STRUCTURE DATA

STR. NO.	FDOT BOX TYPE	TOP EL. (FT.)	BOTT. EL. (FT.)	DISCHARGE PIPE			ATTENUATION AND TREATMENT CONTROLS				
				TYPE	SIZE (IN.)	INV. EL. (FT.)	STR. TYPE	ATTENUATION OPENING (IN.)		EL. (FT.)	REMARKS
								A	B		
4	C	73.92	70.97	RCP	15	71.54	CS-1	24	6	73.47	

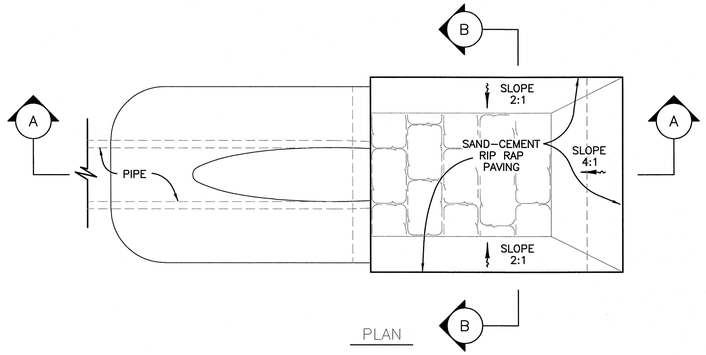

PLAN

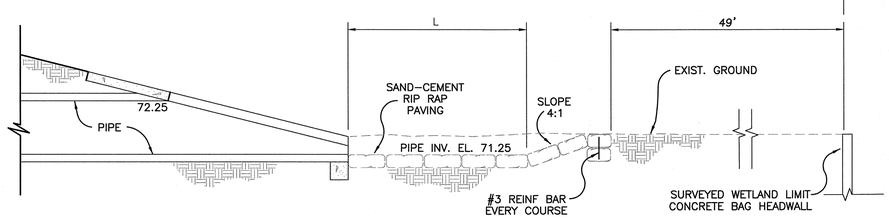

SECTION "A-A"

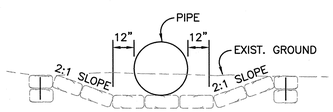

SECTION "B-B"

MES - STRUCTURE 5
TYPICAL OUTFALL SUMP DETAIL
SAND-CEMENT BAG

NOTE:
DRAWING NOT TO SCALE

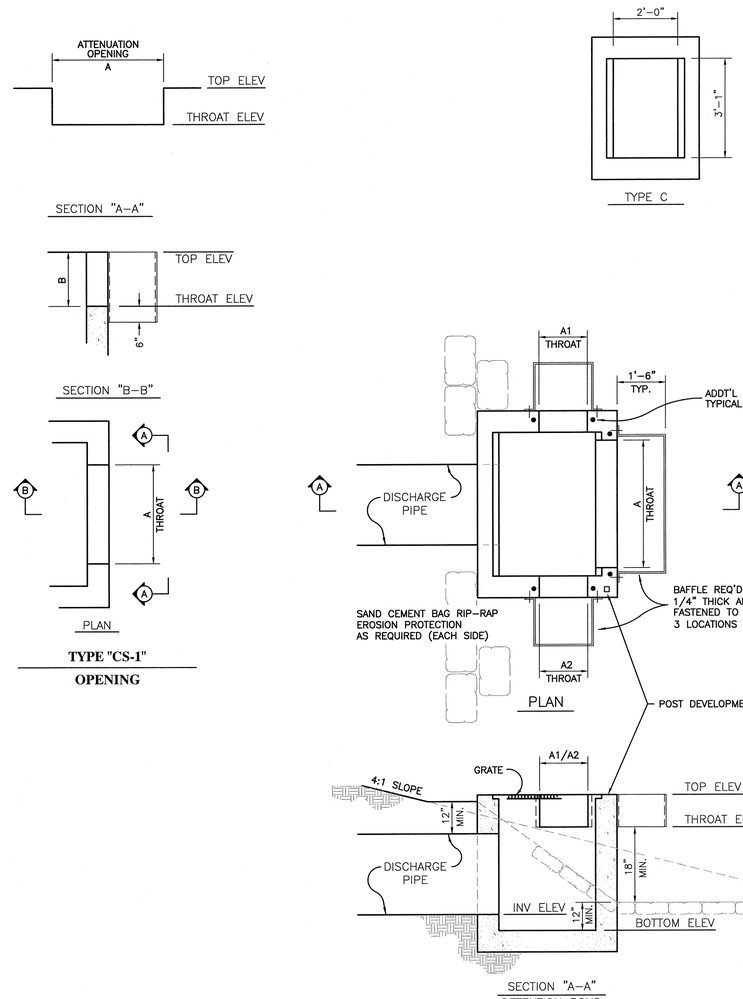

PLAN

TYPE "CS-1"
OPENING

SECTION "A-A"
DETENTION POND

TYPICAL CONTROL STRUCTURE
MODIFIED

NOTES:
1. DRAWING NOT TO SCALE
2. CONTRACTOR SHALL SUBMIT SHOP DRAWINGS TO ENGINEER FOR APPROVAL PRIOR TO CONSTRUCTING CONTROL STRUCTURES

HAMILTON
ENGINEERING & SURVEYING INC
311 NORTH NEWPORT AVENUE
TAMPA, FL 33606
LB #7013 CA #4474
TEL (813) 250-3535
FAX (813) 250-3536

SHEET TITLE: CONTROL STRUCTURE DETAIL

RECREATION ALTERNATIVE, LLC.
2840 LAND O' LAKES BLVD.
PASCO COUNTY, FLORIDA

NO.	DATE	REVISION

HEATHER L. WERTZ, PE
REGISTERED PROFESSIONAL ENGINEER
LICENSE NO. 54691
STATE OF FLORIDA
AUGUST 4, 2015

DRAWN BY: M. BURBANK
CHECKED BY: H. WERTZ
JOB #: 03177.0001
SEC TWP RNG: 10/29S/19E
DATE: 01/09/2015

J:\3001 To 3500\03177 Recreation Alternatives LLC\0001- 2840 Land O Lakes Blvd\ENGR\1 DWGs\Construction\CK-503.dwg (CONTROL STRUCTURE DETAIL) meghamb Aug 04, 2015 - 3:35pm

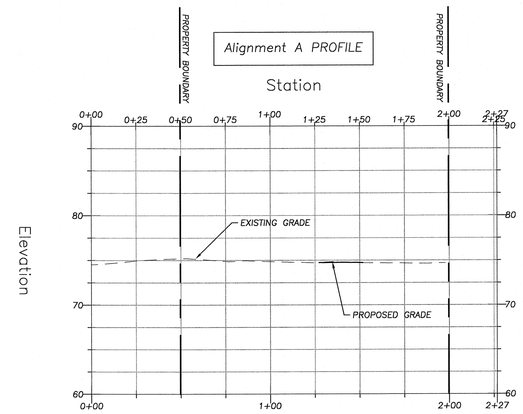

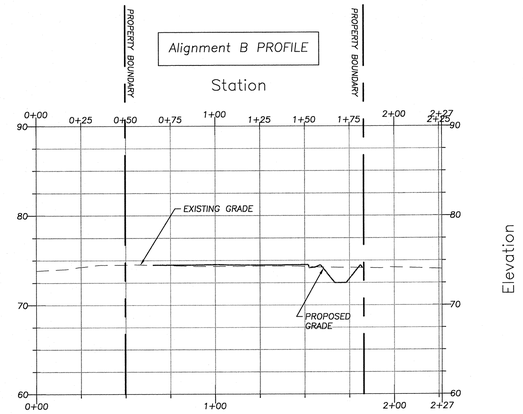

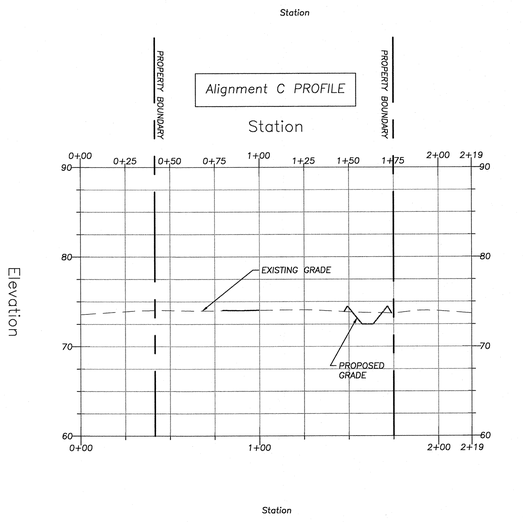

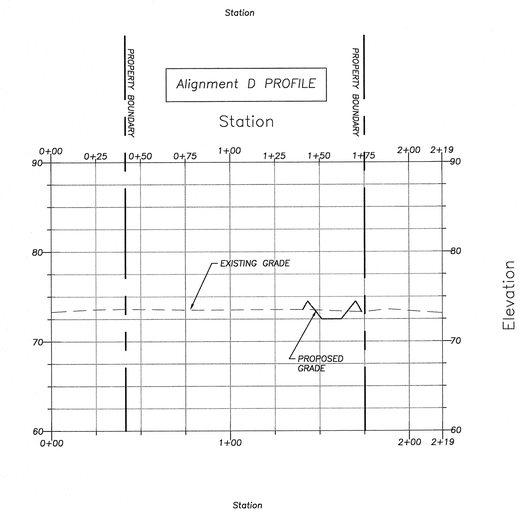

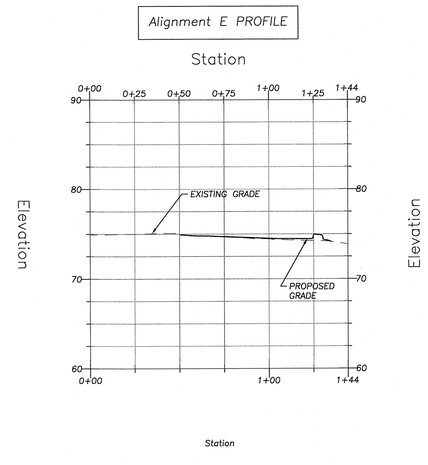

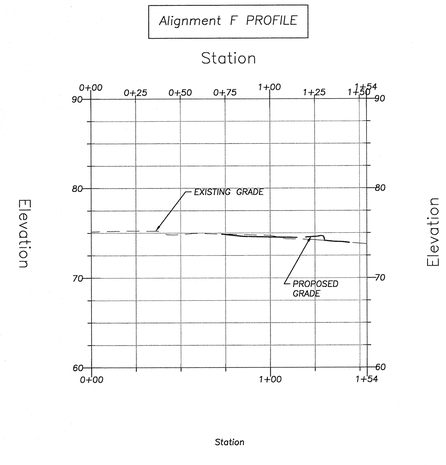

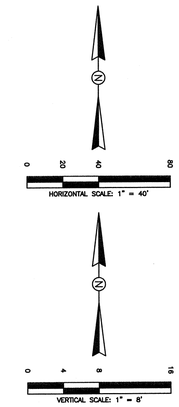

PROJECT IS LOCATED IN FLOOD ZONE X ACCORDING TO FEMA F.I.R.M. COMMUNITY PANEL NO: 12101C0404F DATED 09/26/14

Elevations based on The National Geodetic Vertical Datum of 1929 (NVGD 29)

HAMILTON
ENGINEERING & SURVEYING INC
3400 W. Lemon Street
TAMPA, FL. 33609
TEL: (813) 250-3535
FAX: (813) 250-3536
LB #7013 CA #8474

SHEET TITLE: TYPICAL CROSS SECTIONS

RECREATION ALTERNATIVE, LLC.
2840 LAND O' LAKES BLVD.
PASCO COUNTY, FLORIDA

NO.	DATE	REVISION	BY

HEATHER E. WERTZ, PE
LICENSE No 54691
STATE OF FLORIDA
PROFESSIONAL ENGINEER
AUGUST 5, 2015

DRAWN BY: SANDOVAL
REVIEWED BY: BURBANK
JOB #: 03177.0001
SEC TWP RNG: 25/26S/18E
DATE: 01/09/2015

J:\3001 To 3500\03177 Recreation Alternatives LLC\0001- 2840 Land O Lakes Blvd\ENGR\1 DWGs\Constructio\CG-301.dwg (TYPICAL CROSS SEC TIONS) meghanb Aug 04, 2015 - 3:35pm

NOTE: THE CONTRACTOR IS RESPONSIBLE FOR ALL SWPPP REQUIREMENTS AS OUTLINED IN THE FOLLOWING STORMWATER POLLUTION PREVENTION PLAN, INCLUDING FILING NOI (NOTICE OF INTENT TO COMMENCE CONSTRUCTION), NOT (NOTICE OF TERMINATION) AND REPORTING.

STORMWATER POLLUTION PREVENTION PLAN

Contained on these plans and within the following notes is a Storm Water Pollution Prevention Plan (SWPPP) which has been developed by Hamilton Engineering and Surveying, Inc. in accordance with the Florida Department of Environmental Protection's (FDEP) "National Pollutant Discharge Elimination System" (NPDES) Generic Permit for Stormwater Discharge from Large and Small Construction Activities.

The following entities are identified as team members of "SWPPP": Hamilton Eng. & Surv., the Developer as identified in the title box of these plans, and the site contractor and his sub-contractors. Each team member has specific responsibilities and obligations. In general, all team members, with regard to their involvement and responsibilities on the project, are to implement all necessary storm water management controls to assure compliance with the NPDES Generic Permit for Storm Water Discharges from Construction Activities, the Southwest Florida Water Management District Permit, the applicable local governing agency (i.e. Hillsborough County, City of Tampa, etc) and the guidelines listed in the SWPPP. The duties and responsibilities of the team members as they pertain to the SWPPP are as follows:

Hamilton Engineering and Surveying, Inc.

A. Develop SWPPP including, but not limited to, retention/detention ponds, control structures, erosion control methods and locations and stabilization criteria. This design is included within these construction plans and the following notes and instructions.

B. Submit and obtain the necessary design related storm water permits from the Florida Department of Environmental Protection, the Southwest Florida Water Management District and other applicable governmental bodies.

Contractor

A. Upon notification by the developer of his intent to commence construction, submit a Notice of Intent to the FDEP on behalf of the developer including SWPPP certification and copy of the permit.

B. Submit to SWFWMD and the operator of the municipal separate storm water system, if applicable, a letter of construction commencement.

C. Complete and submit a Notice of Termination and certification for developer. The NOT's shall be submitted no more than 30 days after
   (a) completion of the project and final stabilization of the site or
   (b) when responsibility for the site has ended. Final stabilization as defined by EPA is when all soil disturbing activities at the site have been completed and a uniform (e.g. evenly distributed, without large bare areas) perennial vegetative cover with a density of 70% of the native background vegetative cover for the area has been established on all unpaved areas and areas not covered by permanent structures. As an alternative, equivalent permanent stabilization measures (such as riprap, gabions, or geotextiles) may be employed. The client shall notify Hamilton Engineering when one of these criteria has been met.

D. Sign and return to Hamilton a Contractors Certification Form certifying your understanding of and willingness to comply with the Storm Water Pollution Prevention Plan no later than 48 hours prior to commencement of construction. Also, each subcontractor affected by the SWPPP must certify to the contractor that they understand and shall comply with the NPDES permit and SWPPP. A record of these certifications shall be maintained by the contractor on site.

E. During construction, assure compliance with the designed Storm Water Pollution Prevention Plans prepared by Hamilton Engineering and the NPDES Generic Permit for Storm Water Discharges from Large and Small Construction Activities.

F. Maintain a copy of the construction plans, which include the Storm Water Pollution Prevention Plan, the NOI, and all inspection reports and certifications on site.

G. Undertake all reasonable Best Management Practices (BMP's) to assure that silted or otherwise polluted storm water is not allowed to discharge from the site during all phases of construction. Stabilization BMP's that may be used include: temporary or permanent seeding, mulching, geotextiles, sodding, vegetative buffer strips, protection of trees and preservation of mature vegetation. Structural erosion and sediment control BMP's that may be used include: straw bale dikes, silt fences, earth dikes, brush barriers, drainage swales, check dams, subsurface drain, pipe slope drain, level spreaders, storm drain inlet protection, outlet protection, sediment traps, and temporary sediment basins. Detention ponds may also be used as temporary sediment basins. Additional BMP's that may need to be implemented include: providing protected storage areas for chemicals, paints, solvents, fertilizers, and other potentially toxic materials. Providing waste receptacles at convenient locations and providing regular collection of wastes, including building material wastes. Minimizing off-site tracking of sediments. Making adequate preparations, including training and equipment to contain spills of oil and hazardous materials. Complying with applicable state or local waste disposal, sanitary sewer or septic system regulations and the use of appropriate pollution prevention measures for allowable non-storm water components of discharge.

H. Notify Hamilton Engineering and the developer in writing of any non-storm water pollution sources which are being stored, or otherwise used during the construction of the project, e.g., fertilizers, fuels, pesticides, other chemicals. This notification should be accompanied with the contractor's design and methods to prevent pollution run-off from these sources.

I. Develop a maintenance and inspection plan which includes, but is not limited to the following:

   A. The specific areas to be inspected and maintained that includes all the disturbed areas and material storage areas of the site.

   B. The erosion and sediment controls identified in the SWPPP to be maintained and inspected and those additional controls that the contractor deems necessary.

   C. Maintenance procedures.

   D. The procedure to follow if additional work is required or whom to call.

   E. Inspections and maintenance forms.

   F. The personnel assigned to each task.

   The following shall be inspected a minimum of once a week or within 24 hours after 0.50 inches of rainfall:

   - Stabilization measures (once a month if fully stabilized).
   - Structural controls.
   - Discharge points.
   - Construction entrances and exits.
   - Areas used for storage of exposed materials.

   An inspection form shall be completed for each inspection. Any permit violations should be noted and corrective measures shall be taken no later than 7 days after the inspection occurred. If revisions to the SWPPP are needed, a report form for changes in the SWPPP shall be completed and a copy sent to Hamilton Engineering & Surveying, Inc. The original shall be kept on-site as documentation of the change. If the inspection passes, a certification that the facility is in compliance with the SWPPP and the NPDES permit must be signed by a duly authorized representative of the principal executive official of the operator of the SWPPP with one of the following qualifications:

   1. Has successfully completed the Florida Stormwater, Erosion and Sediment Control Inspector Training Program.
   2. Successfully completed a similar training program.
   3. Has enough practical on the job training to be qualified to perform the inspections.

   Retain inspection reports and certifications for at least three years.

J. Site stabilization measures shall be initiated as soon as practical but in no case more than 7 days, in portions of the site where construction activities have temporarily or permanently ceased.

K. Releases in Excess of Reportable Quantities.

   1. The discharge of hazardous substances or oil in the stormwater discharge(s) from a facility or activity shall be prevented or minimized in accordance with the applicable stormwater pollution prevention plan for the facility or activity. This permit does not relieve the operator of the reporting requirements of 40 CFR part 117 and 40 CFR part 302. Where a release containing a hazardous substance in an amount equal to or in excess of a reporting quantity established under either 40 CFR 117 or 40 CFR 302, occurs during a 24 hour period:

      a. The operator is required to notify the State Warning Point (800-210-0519 or 850-413-9911) as soon as he or she has knowledge of the discharge;

      b. The operator shall submit within 14 calendar days of knowledge of the release a written description of: the release (including the type and estimate of the amount of material released), the date that such release occurred, the circumstances leading to the release, and remedial steps to be taken, to the Florida Department of Environmental Protection, NPDES Stormwater Section, Mail Station 2500, 2600 Blair Stone Road, Tallahassee, Florida 32399-2400; and

      c. The stormwater pollution prevention plan required under Part V of this permit must be modified within 14 calendar days of knowledge of the release to: provide a description of the release, the circumstances leading to the release, and the date of the release. In addition, the plan must be reviewed to identify measures to prevent the reoccurrence of such releases and to respond to such releases, and the plan must be modified where appropriate.

   2. This permit does not authorize the discharge of hazardous substances or oil resulting from an on-site spill.

Developer

A. Notify Hamilton of your intent to commence construction. Sign the Notice of Intent form as operator of the storm water discharge facility and permittee and return to the Contractor.

B. Sign a Certification of Storm Water Pollution Prevention Plan and return to the Contractor.

C. Notify the Contractor when it is time to submit a Notice of Termination as defined under Part C of the Contractor section of the SWPPP. Sign and return to the Contractor for submittal to FDEP a Notice of Termination form and certification.

PRE-DEVELOPED SITE INFORMATION:

1. Total site acreage: *2.39 ACRES*
2. Land use: *General Commercial*
3. Vegetation: *Existing grassed areas and trees*
4. Receiving waters or municipal separate storm water system: *LAKE PADGETT*
5. 2 Year/24 Hour rainfall depth: *4.2 inches*
6. Soil types: *ADAMSVILLE FINE SAND*

PROJECT INFORMATION:

1. Project type: *GENERAL COMMERCIAL*
2. Anticipated construction sequence is as follows:
   1. Complete erosion control installation
   2. Clearing and grubbing
   3. Earthwork activities
   4. Storm water system construction
   5. Utility construction
   6. Base and pavement construction
   7. Final stabilization

   The BMP's listed in Part G of the Contractor section of the SWPPP shall be considered during all phases of construction.
3. Anticipated start date: *5/2015*
4. Anticipated completion date: *8/2015*
5. Total acres disturbed: *0.47 ACRES*
6. Pre-developed "C" factor: *0.45*
7. Post-developed "C" factor: *0.65*
8. The storm water management system, upon completion of construction and appropriate certification and as-built submittals will be operated and maintained by *THE PROPERTY OWNER*.
9. The potential source of pollution from this project is on-site development and construction activity.

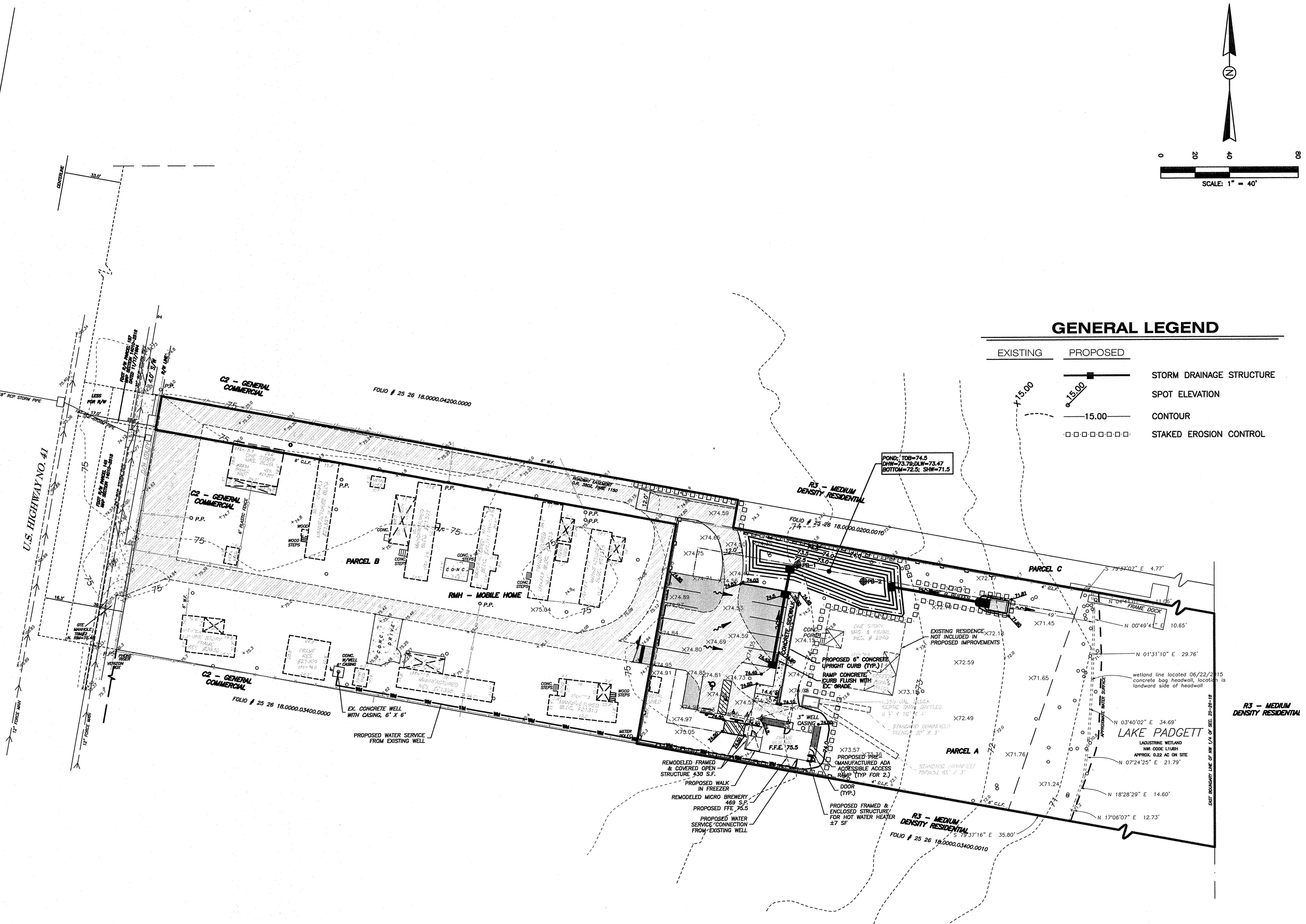

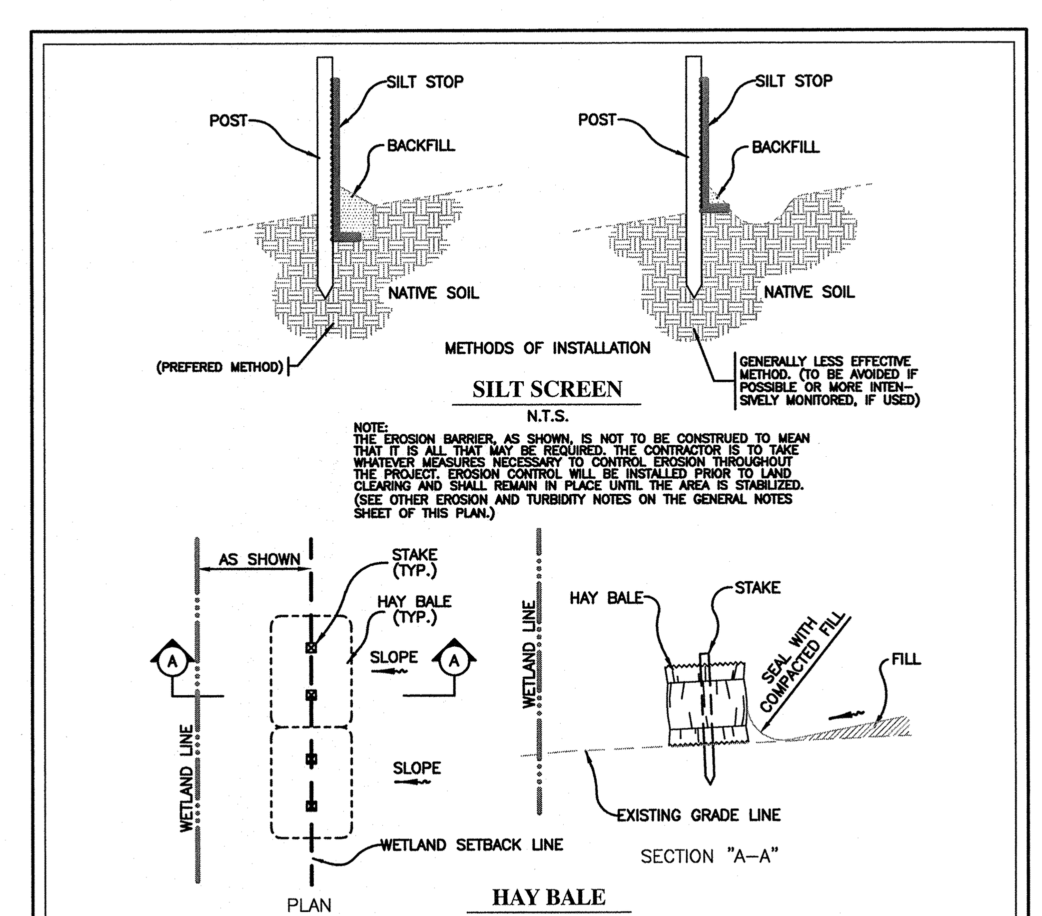

EROSION CONTROL DETAILS
EITHER METHOD OR A COMBINATION OF BOTH IS ACCEPTABLE

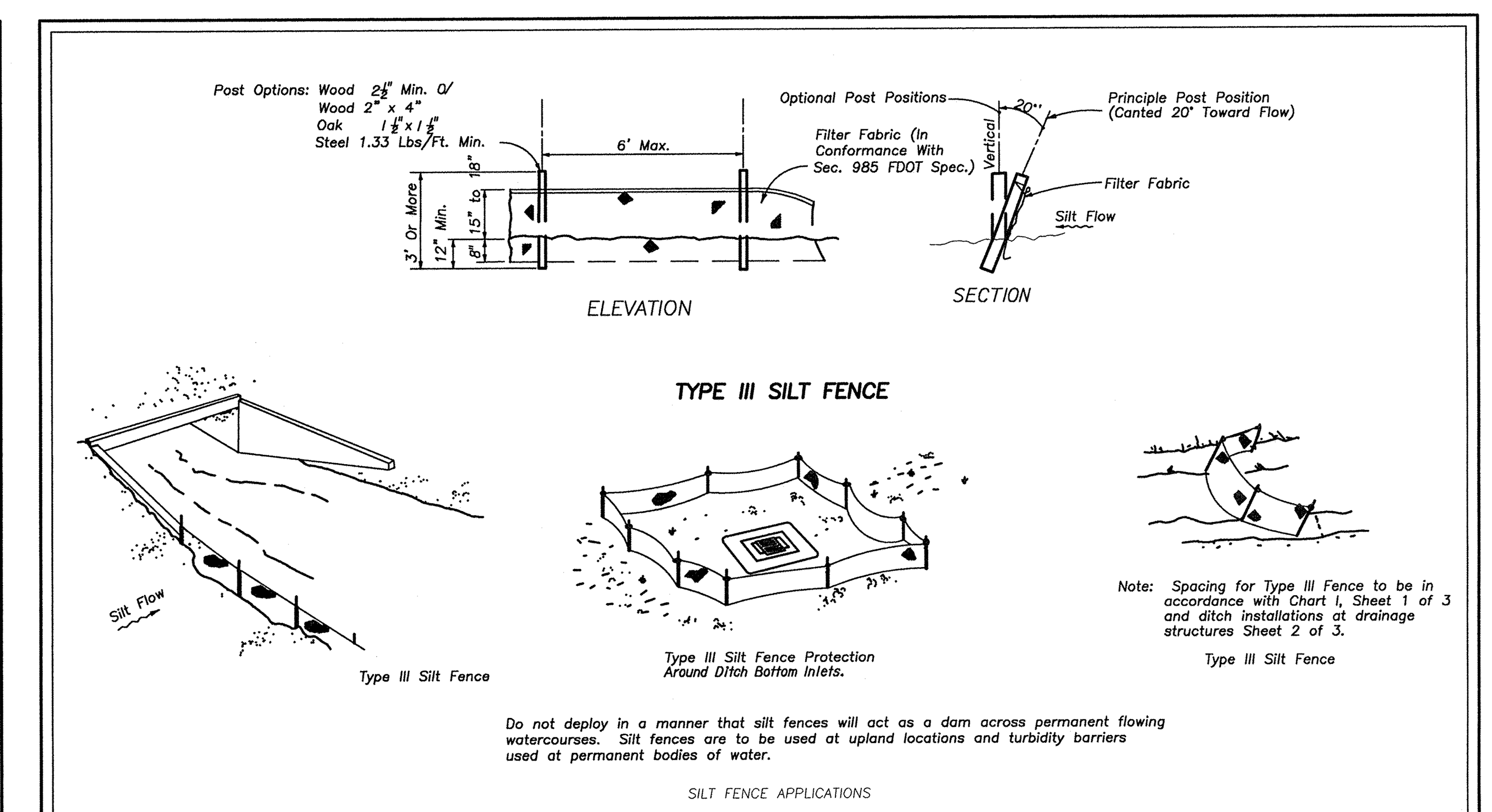

TEMPORARY EROSION CONTROL
N.T.S. F.D.O.T. INDEX NO. 102

PROJECT IS LOCATED IN FLOOD ZONE X ACCORDING TO FEMA F.I.R.M. COMMUNITY PANEL NO: 12101C0404F DATED 09/26/14

Elevations based on The National Geodetic Vertical Datum of 1929 (NVGD 29)

HAMILTON
ENGINEERING & SURVEYING INC
3409 W. LEMON STREET
TAMPA, FL 33609
TEL (813) 250-3535
FAX (813) 250-3636
LB #7013 CA #8474

SHEET TITLE: CONSTRUCTION SURFACE WATER MANAGEMENT PLAN

RECREATION ALTERNATIVE, LLC.
2840 LAND O' LAKES BLVD.
PASCO COUNTY, FLORIDA

NO.	DATE	REVISION	BY

DRAWN BY: SANDOVAL
CHECKED BY: BURBANK
JOB #: 03177.0001
SEC TWP RNG: 25/26S/18E
DATE: 01/09/2015

J:\3001 To 3500\03177 Recreation Alternatives LLC\0001- 2840 Land O Lakes Blvd\ENGR\CE-401-CW.dwg (CSWMP) meghanb Aug 04, 2015 - 3:36pm

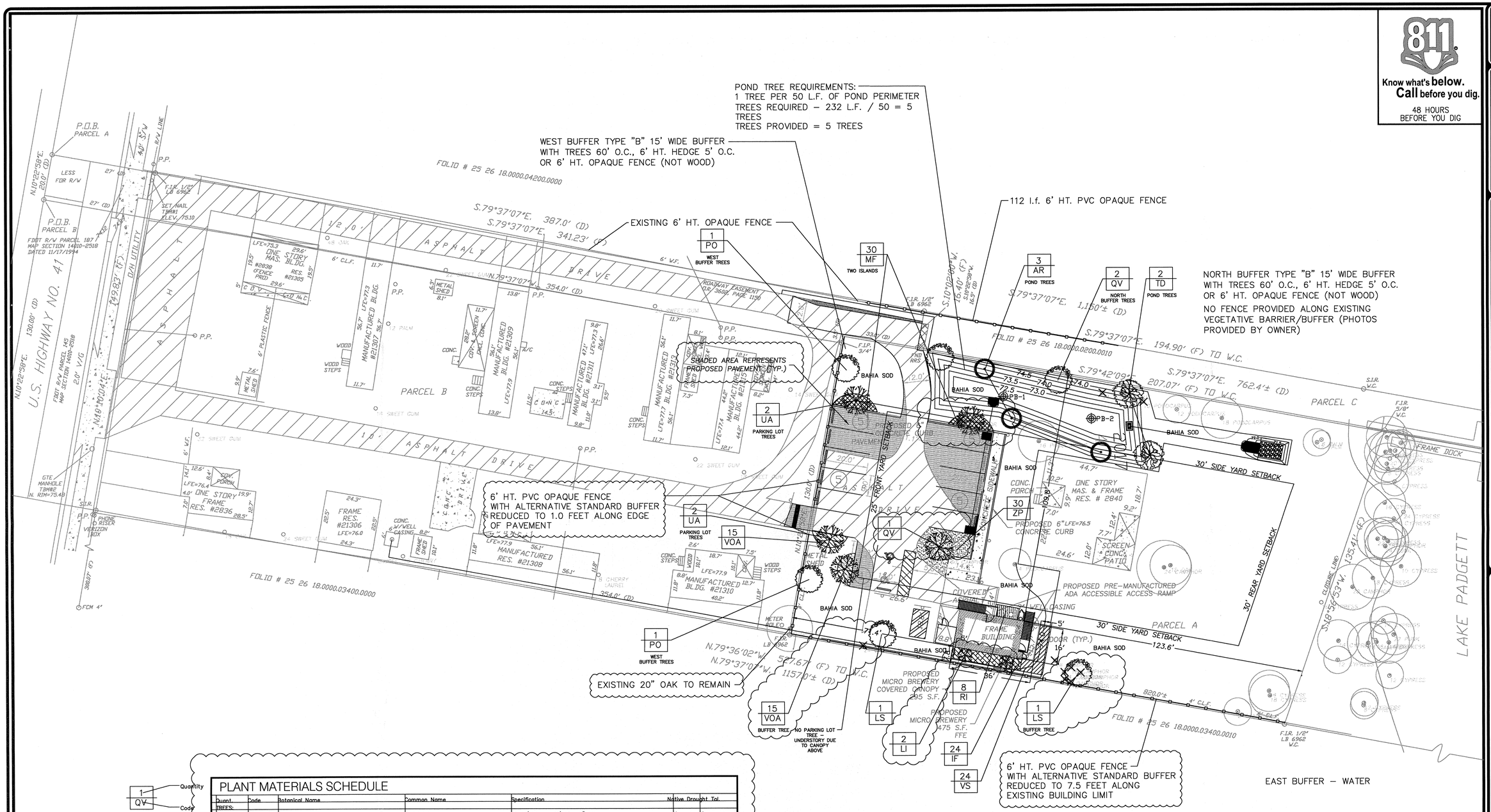

1 QV — Quantity / Code

PLANT MATERIALS SCHEDULE

Quant.	Code	Botanical Name	Common Name	Specification	Native	Drought Tol.
TREES:						
3	AR	Acer rubrum	Red Maple	12–14' ht. x 4–5' spr., 3" cal.	Y	Y
2	I	Lagerstromia indica	Crape Myrtle	8' ht. x 4' spr., 3" cal.	N	Y
2	S	Liquidambar styraciflua	Sweet Gum	12–14' ht. x 4–5' spr., 3" cal.	Y	Y
2	PO	Platanus occidentalis	Sycamore	12–14' ht. x 4–5' spr., 3" cal.	Y	N
3	QV	Quercus virginiana	Live Oak	12–14' ht. x 4–5' spr., 3" cal.	Y	Y
2	TD	Taxodium distichum	Bald Cypress	12–14' ht. x 4–5' spr., 3" cal.	Y	Y
4	UA	Ulmus alata	Elm	12–14' ht. x 4–5' spr., 3" cal.	Y	Y
18 TREES						
SHRUBS: Minimum 3 gal. container						
30	MF	Myrcianthes fragrans	Simpson's Stopper	3 gal., 18" ht. x 18" spr.	Y	N
24	F	Illicium floridanum	Florida Anise	3 gal., 18" ht. x 18" spr.	Y	N
8	RI	Raphiolepis indica	Indian Hawthorn	3 gal., 18" ht. x 18" spr.	N	Y
24	VS	Viburnum suspensum	Sandankwa Viburnum	3 gal., 18" ht. x 18" spr.	N	Y
50	VOA	Viburnum obovatum	Walter's Viburnum	3 gal., 18" ht. x 18" spr.	Y	Y
50	ZP	Zamia pumila	Coontie	3 gal., 18" ht. x 18" spr.	Y	Y

NOTE: Multi trunk trees shall have no less than 3 trunks. Each stem shall be at least 1" in caliper and 6' in height at time of installation.

146 PLANTS PROPOSED, 114 NATIVE = 78% NATIVE PLANTS
146 SHRUBS PROPOSED, 92 DROUGHT TOLERANT = 63% DROUGHT TOLERANT PLANTS

NATIVE AND DROUGHT TOLERANT SPECIES:
"DROUGHT TOLERANT PLANTS FOR NORTH AND CENTRAL FLORIDA"
IFAS EXTENSION UNIVERSITY OF FLORIDA
GARY KNOX

TREE LEGEND

TREE SPECIES AND SIZE AS SHOWN ON DRAWING

NOTE: ONLY TREES 10" D.B.H. OR LARGER TO BE REMOVED HAVE BEEN SHOWN.

NOTE: ANY PLANT MATERIAL REQUIRED BY THESE REGULATIONS SHALL BE REPLACED WITHIN 30 DAY OF THEIR DEMISE AND/OR REMOVAL.

NOTE: SEE SHEET D–1 AND D–2 FOR PLANT MATERIAL SCHEDULE, GENERAL NOTES AND DETAILS

0 20' 40 80'
Scale 1" = 20' - 0"
North

Know what's below. Call before you dig.
48 HOURS BEFORE YOU DIG

DRAWING NOT VALID UNLESS SIGNED, DATED AND EMBOSSED WITH ORIGINAL OF DESIGN LANDSCAPE ARCHITECT

Date	Revision	Description
06.12.15	1	review comments
07.15.15	2	review comments

Issue Date 01.15.15
Scale 1" = 20'-0"
Drawn DC
Design DC
COPYRIGHT 2014

Richard D. Copley
Registered Landscape Architect
Florida License No. LA0001398
Pennsylvania License No. LA001396-R

Landscape Development Plan

RECREATION ALTERNATIVE

2840 Land O' Lakes Boulevard, Pasco County, Florida

CDA COPLEY DESIGN ASSOCIATES, INC.
1866 Laney Drive • Palm Harbor • Florida • 34683 • Phone 727 787-2840
LANDSCAPE ARCHITECTURE • SITE PLANNING
MONRSVILLE, PENNSYLVANIA
License # LA-001398-R
PALM HARBOR, FLORIDA
License # LA-0001483

JOB NO. 14029

SHEET L - 1

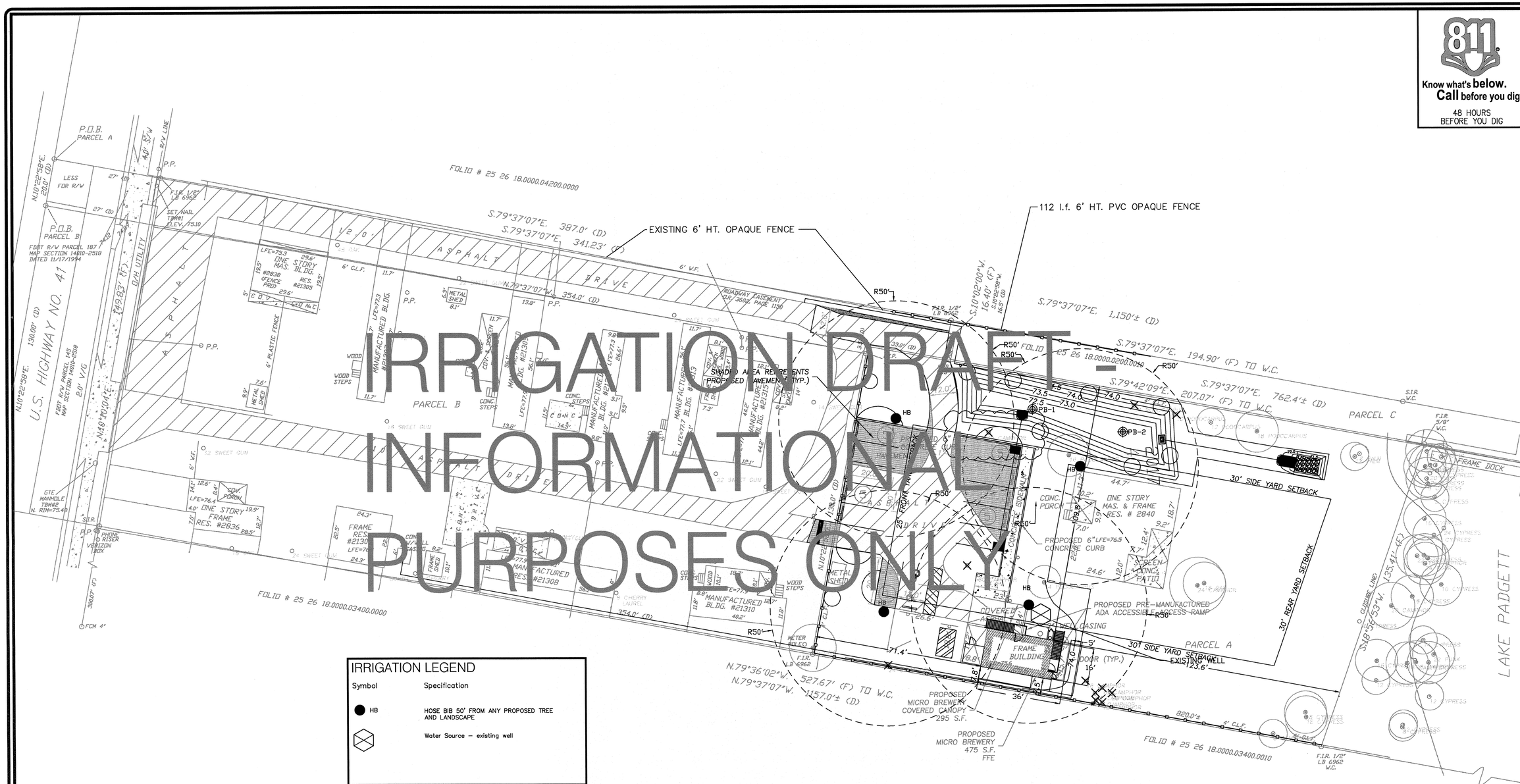

IRRIGATION LEGEND

Symbol	Specification
● HB	HOSE BIB 50' FROM ANY PROPOSED TREE AND LANDSCAPE
⊗	Water Source – existing well

TREE LEGEND

TREE SPECIES AND SIZE AS SHOWN ON DRAWING

NOTE: ONLY TREES 10" D.B.H. OR LARGER TO BE REMOVED HAVE BEEN SHOWN.

NOTE: SEE SHEET D-1 AND D-2 FOR PLANT MATERIAL SCHEDULE, GENERAL NOTES AND DETAILS

0 20' 40 80'

Scale 1" = 20' - 0"

North

811 Know what's below. Call before you dig. 48 HOURS BEFORE YOU DIG

Date	Revision	Description
06.15.15	1	review comments
07.15.15	2	review comments

Issue Date 01.15.15
Scale 1" = 20'-0"
Designer DC
COPYRIGHT 2014

Rolland D. Copley
Registered Landscape Architect
Florida LA-0001483
Pennsylvania LA-001398-R

Irrigation Development Plan

RECREATION ALTERNATIVE

2840 Land O' Lakes Boulevard, Pasco County, Florida

CDA COPLEY DESIGN ASSOCIATES, INC.
1666 Laney Drive • Palm Harbor • Florida • 34683 • Phone 727 787-2840
LANDSCAPE ARCHITECTURE • SITE PLANNING
PALM HARBOR, FLORIDA License # LA-0001483
MOHRSVILLE, PENNSYLVANIA License # LA-001398-R

JOB NO. 14029

SHEET IR - 1

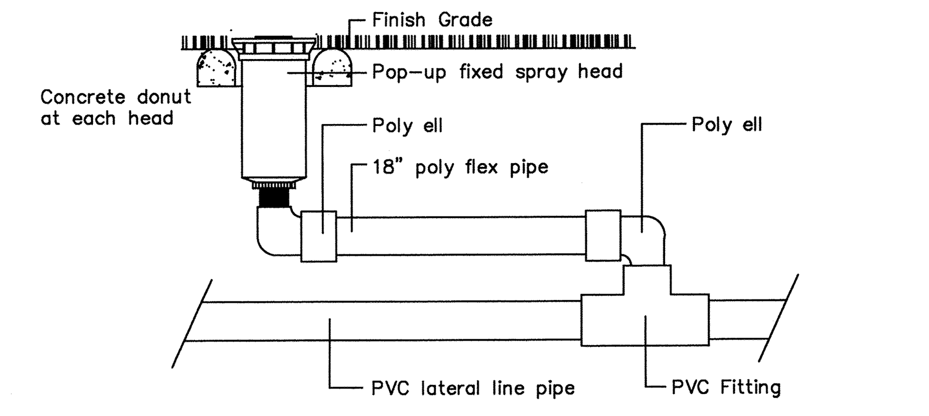

IRRIGATION SPRAY HEAD DETAIL

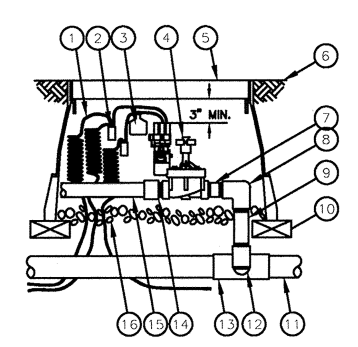

1. 30-INCH LINEAR LENGTH OF WIRE, COILED
2. WATERPROOF CONNECTION RAIN BIRD SPLICE-1 (1 OF 2)
3. ID TAG: RAIN BIRD VID SERIES
4. REMOTE CONTROL VALVE
5. VALVE BOX WITH COVER: RAIN BIRD VB-STD
6. FINISH GRADE/TOP OF MULCH
7. PVC SCH 80 NIPPLE (CLOSE)
8. PVC SCH 40 ELL
9. PVC SCH 80 NIPPLE (LENGTH AS REQUIRED)
10. BRICK (1 OF 4)
11. PVC MAINLINE PIPE
12. SCH 80 NIPPLE (2-INCH LENGTH, HIDDEN) AND SCH 40 ELL
13. PVC SCH 40 TEE OR ELL
14. PVC SCH 40 MALE ADAPTER
15. PVC LATERAL PIPE
16. 3.0-INCH MINIMUM DEPTH OF 3/4-INCH WASHED GRAVEL

ELECTRIC REMOTE-CONTROL VALVE

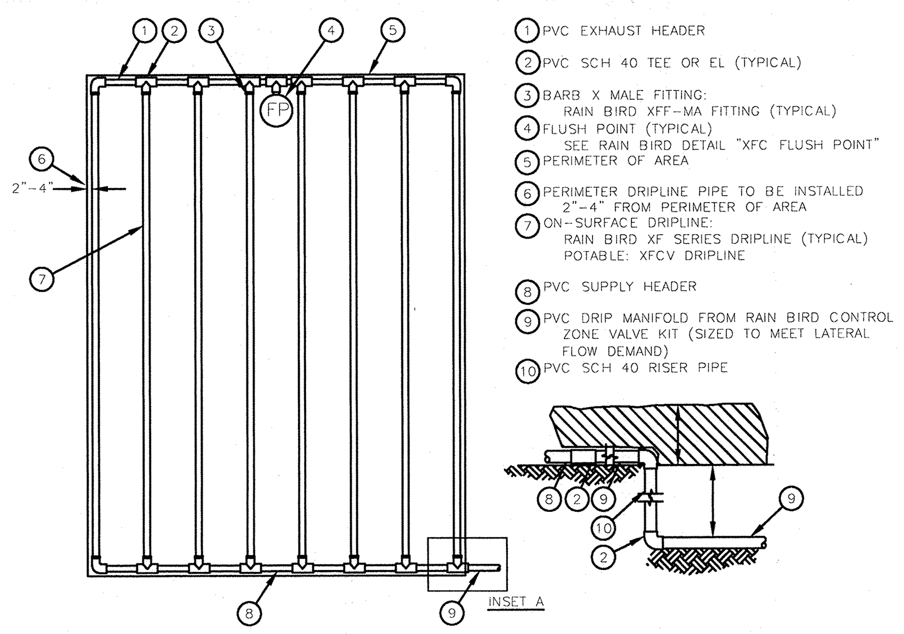

1. PVC EXHAUST HEADER
2. PVC SCH 40 TEE OR EL (TYPICAL)
3. BARB X MALE FITTING: RAIN BIRD XFF-MA FITTING (TYPICAL)
4. FLUSH POINT (TYPICAL) SEE RAIN BIRD DETAIL "XFC FLUSH POINT"
5. PERIMETER OF AREA
6. PERIMETER DRIPLINE PIPE TO BE INSTALLED 2"-4" FROM PERIMETER OF AREA
7. ON-SURFACE DRIPLINE: RAIN BIRD XF SERIES DRIPLINE (TYPICAL) POTABLE: XFCV DRIPLINE
8. PVC SUPPLY HEADER
9. PVC DRIP MANIFOLD FROM RAIN BIRD CONTROL ZONE VALVE KIT (SIZED TO MEET LATERAL FLOW DEMAND)
10. PVC SCH 40 RISER PIPE

NOTES:
1. DISTANCE BETWEEN LATERAL ROWS AND EMITTER SPACING TO BE BASED ON SOIL TYPE, PLANT MATERIALS AND CHANGES IN ELEVATION. **SEE INSTALLATION SPECIFICATIONS ON RAIN BIRD WEB SITE (WWW.RAINBIRD.COM) FOR SUGGESTED SPACING.**
2. LENGTH OF LONGEST DRIPLINE LATERAL SHOULD NOT EXCEED THE MAXIMUM SPACING SHOWN IN THE ACCOMPANYING TABLE.
3. **WHEN USING 17MM INSERT FITTINGS WITH DESIGN PRESSURE OVER 50PSI, IT IS RECOMMENDED THAT STAINLESS STEEL CLAMPS BE INSTALLED ON EACH FITTING.**

INSET A

XFCV Dripline Maximum Lateral Lengths (Feet)

Inlet Pressure psi	12" Spacing Nominal Flow (gph) 0.6	12" Spacing Nominal Flow (gph) 0.9	18" Spacing Nominal Flow (gph) 0.6	18" Spacing Nominal Flow (gph) 0.9
20	192	136	254	215
30	289	205	402	337
40	350	248	498	416
50	397	281	573	477
60	436	309	637	529

DRIPLINE LAYOUT

GENERAL IRRIGATION NOTES

1. Install hose bibs at 50' radius to provide 100% coverage of all landscape areas.
2 Shrub risers shall only be used in hedges or mass plantings. Risers shall not extend more than 2" above the installed height of the plant. All risers shall be schedule 40 pipe, painted black. In no case shall shrub risers be installed adjacent to walkways, driveways or other areas where they may be damaged.
3. All heads installed in planting areas along walks, drives and parking lots shall be 12" pop-up fixed spray heads. All heads shall be installed with the top of the spray body flush with finish grade. All groundcover areas shall be irrigated with 12" pop-up fixed spray heads and extensions as required.
4. All sodded areas shall be irrigated with 4" pop-up spray heads or pop-up gear driven heads unless otherwise specified.
5. Pipe, valves and other irrigation equipment may be shown in drives, walks or buildings for clarity only. Install all valves and other equipment in landscape beds for best accessibility and concealment.
6. Valves shall be installed in a manifold within a valve box of sufficient size to service all valves within the box. Valve box shall be free from any debris which may cover valves. Provide a 3" depth gravel sump at the bottom of the valve pit.
7. All irrigation equipment and installation techniques shall meet federal, state and local codes, regulations and ordinances.
8. All gear driven heads and all heads along walks, curbs, drives and parking areas shall be installed on flexible polyethylene swing joints.
9. Gear driven heads and fixed spray heads shall be installed on separate zones where possible. Precipitation rates and head type should be compatible within each zone.
10. Gear driven heads shall not be installed in shrub areas or be installed on risers where possible.
11. Controller shall be mounted as shown on plan
12. All sleeves shall be schedule 40 pipe installed a minimum of 18" below grade. Sleeves shall be used only to install lateral irrigation lines through. Sleeves shall not be used as a method to convey water through the system.
13. Adjust all heads to provide maximum coverage and efficiency and minimize overthrow. Irrigation heads shall not spray over walks, drives or any other non-irrigated areas.
14. Equipment shall be manufactured by, "Toro", "Rainbird" or "Hunter" or as otherwise stated on the plans.
15. Contractor shall field verify water source to deliver the proper pressure, pounds per square inch (PSI) and water flow, gallons per minute (GPM) as required by the irrigation system. Notify the Landscape Architect if there is any discrepancy prior to installation. Discrepancies reported after installation shall be the responsibility of the contractor.
16. All permits required for installation shall be provided by the contractor.
17. Refer to the Landscape Plans when locating all irrigation equipment. Allow ample room near irrigation equipment for the proper installation of trees, shrub, sod, and other work shown on drawings to be installed.
18. All wires shall be installed in wire sleeves.
19. Contractor shall be responsible for all items on the plan and irrigation specification.
20. Contractor shall instruct the owner on the full operation and maintenance of the irrigation system.
21. Contractor shall be responsible for all final repairs or adjustments to provide proper coverage to all landscape areas.
22. All questions regarding Irrigation specifications shall be directed to the Landscape Designer at (727) 787-2840.
22. Contractor is responsible for all items on plans and within written specifications booklet.
23. Piping may be shown in pavement areas and/or through tree root areas for clarity only. Install all piping within sod or planting areas. HAND DIG ONLY UNDER THE CANOPIES OF EXISTING TREES. Re-route pipe layout as necessary to avoid roots from existing trees and plantings to remain.

GENERAL SOD NOTES

1. During periods of drought, sod shall be watered sufficiently at its origin to moisten the soil adequately to the depth to which it is to be cut.
2. An application of 6-6-6, 40% organic, slow or controlled release fertilizer shall be made to all lawn areas just prior to the laying of the sod at a rate of one (1) pound of nitrogen per 1,000 square feet. The ground shall be wet down before the sod is laid in place.
3. Solid sod shall be laid tightly with closely abutting staggered joints with an even surface edge and sod edge, in a neat clean manner to the edge of all the paving and shrub bed areas. Cut down soil level to 1 inch to 1-1/2 inches below top of walks and drives prior to laying sod.
4. Within 2 hours after installing sod and prior to rolling, irrigate the sod. Sufficient water shall be applied to wet the sod thoroughly and to wet the sub-soil to a depth of 1 inch. Watering shall be done in a manner that will avoid erosion due to the application of excessive quantities, and the watering equipment shall be of a type that will prevent damage to the finished sod surface. Water shall be repeated as necessary to keep sod moist until rooted to sub-grade.
5. The sod shall be pressed firmly in contact with the sod bed using a turf roller or other approved equipment so as to eliminate air pockets, providing a true and even surface and insure knitting without any displacement of the sod or deformation of the surfaces of sodded areas. After the sodding operation has been completed, the edges of the area shall be smooth and shall conform to the grades indicated.
6. If, in the opinion of the Landscape Architect, top dressing is necessary after rolling, clean silica sand shall be used to fill voids. Evenly apply sand over the entire surface to be leveled, filling-in dips and voids and thoroughly washing into the sod areas.
7. On slopes steeper than 2:1 and as required, the sod shall be fastened in place with suitable wooden pins or by other approved method.

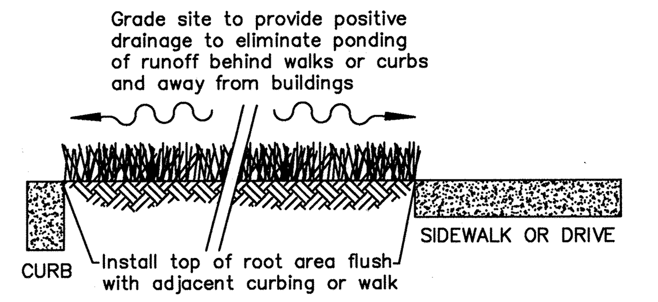

NOTE: CONTRACTOR SHALL SCALP AND RE-GRADE ALL AREAS TO RECEIVE SOD. REMOVE EXCESS SOIL, UN-WANTED PLANTINGS, DEBRIS AND OTHER DELETERIOUS MATERIALS AND HAUL FROM SITE. PROVIDE A FLAT, LEVEL SURFACE PROVIDING POSITIVE DRAINAGE AWAY FROM BUILDINGS AND FROM BEHIND WALKS, CURBS, PAVEMENT AND STRUCTURES TO ELIMINATE ALL PONDING OF WATER.

SOD/PAVEMENT EDGE

Test and adjust soil pH to 5.5 to 6.5

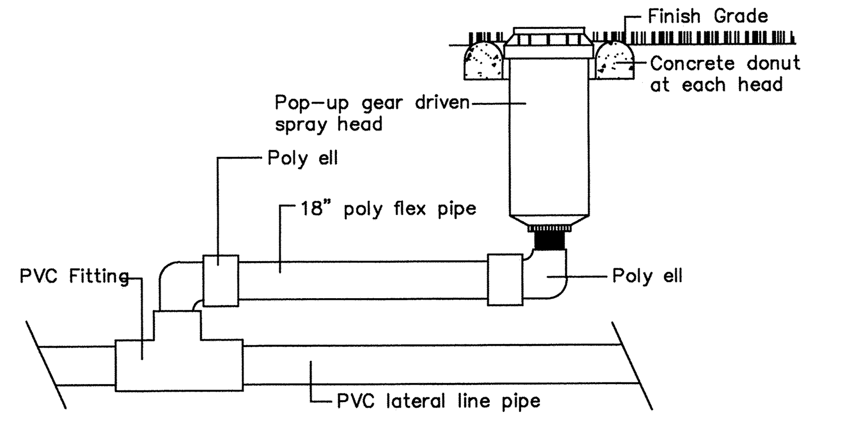

GEAR DRIVEN HEAD DETAIL

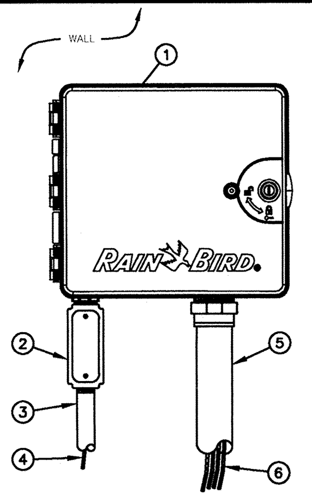

1. IRRIGATION CONTROLLER: RAIN BIRD ESP-LXME CONTROLLER IN PLASTIC CABINET WITH WALL MOUNT. INSTALL CONTROLLER AND CABINET ON WALL PER MANUFACTURER'S RECOMMENDATIONS.
2. JUNCTION BOX
3. 1-INCH CONDUIT AND FITTINGS TO POWER SUPPLY
4. POWER SUPPLY WIRE
5. 2-INCH CONDUIT AND FITTINGS FOR STATION WIRES
6. WIRES TO REMOTE CONTROL VALVES

CONTROLLER DETAIL

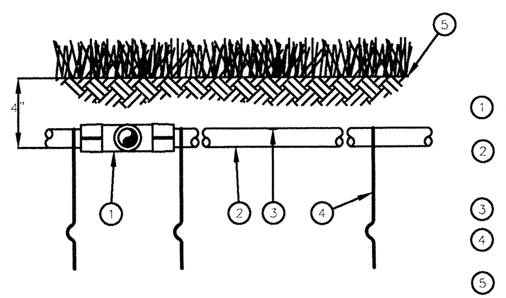

1. EASY FIT COMPRESSION TEE: RAIN BIRD MDCFTEE
2. LANDSCAPE DRIPLINE TUBING: RAIN BIRD XF-SDI SERIES DRIPLINE
3. EMITTER
4. TIE DOWN STAKE: RAIN BIRD TDS-050 WITH BEND (TYPICAL)
5. LANDSCAPE/FINISH GRADE

NOTES:
1. PLACE TIE DOWN STAKES EVERY THREE FEET IN SAND, FOUR FEET IN LOAM, AND FIVE FEET IN CLAY.
2. AT FITTINGS WHERE THERE IS A CHANGE OF DIRECTION SUCH AS TEES OR ELBOWS, USE TIE-DOWN STAKES ON EACH LEG OF THE CHANGE OF DIRECTION.
3. INSERTION PLOW AND TRENCHED INSTALLATIONS DO NOT REQUIRE TIE DOWN STAKES.

DRIPLINE BURIAL DETAIL

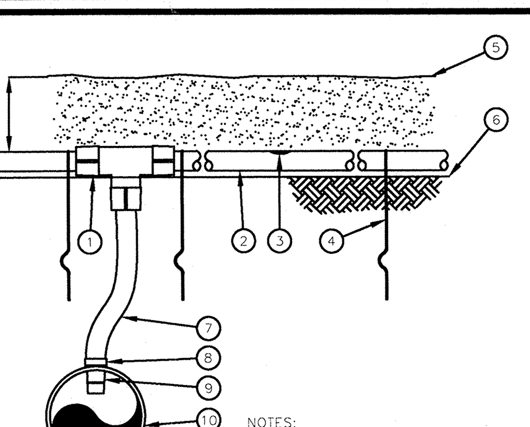

1. EASY FIT COMPRESSION TEE: RAIN BIRD MDCFTEE
2. ON-SURFACE DRIPLINE: RAIN BIRD XF SERIES DRIPLINE POTABLE: XFCV DRIPLINE
3. INLINE DRIP EMITTER OUTLET
4. TIE DOWN STAKE: RAIN BIRD TDS-050 WITH BEND (TYPICAL)
5. MULCH
6. FINISH GRADE
7. 3/4" POLYETHYLENE TUBING: RAIN BIRD XF SERIES BLANK TUBING
8. RATCHET CLAMP (INCLUDED WITH ADAPTER)
9. INSERT ADAPTER FOR PVC PIPE: RAIN BIRD XFD-INVPC
10. PVC LATERAL PIPE MINIMUM 1" IN DIAMETER

NOTES:
1. PLACE TIE DOWN STAKES EVERY THREE FEET IN SAND, FOUR FEET IN LOAM, AND FIVE FEET IN CLAY.
2. AT FITTINGS WHERE THERE IS A CHANGE OF DIRECTION SUCH AS TEES OR ELBOWS, USE TIE-DOWN STAKES ON EACH LEG OF THE CHANGE OF DIRECTION.

DRIPLINE INSERT ADAPTER

IRRIGATION LEGEND

Symbol	Specification
10F	Rainbird 10' Radius Full Circle Sprayhead
10'TQ	Rainbird 10' Radius Three Quarter Circle
10H	Rainbird 10' Radius Half Circle Sprayhead
10Q	Rainbird 10' Radius Quarter Circle Sprayhead
15F	Rainbird 15' Radius Full Circle Sprayhead
15TQ	Rainbird 15' Radius Three Quarter Circle
15H	Rainbird 15' Radius Half Circle Sprayhead
15Q	Rainbird 15' Radius Quarter Circle Sprayhead
15EST	Rainbird 4' X 26' End Strip Sprayhead
15SST	Rainbird 4' X 26' Side Strip Sprayhead
15CST	Rainbird 4' X 26' Center Strip Sprayhead
12F	Rainbird 12' Radius Full Circle Sprayhead
12H	Rainbird 12' Radius Half Circle Sprayhead
12Q	Rainbird 12' Radius Quarter Circle Sprayhead
I-25F	Hunter I-25 Full Circle Gear Driven Head 6 GPM
I-25A	Hunter I-25 Adj. Radius Gear Driven Head 3 GPM
	Water Source - existing well
Zone # GPM/PSI	150 PESB-R 1.5" Electric Remote Control Valve
	Netafim Underground Drip Irrigation with pressure regulator and filter Emitter flow = .9 GPH Emitter spacing = 12" Techline spacing = 12" Burial depth = 4" Application Rate = 1.11"/hour INSTALL FILTER AND PRESSURE REGULATOR KIT
	Irrigation Controller: Rain Bird ESP-LXME controller in plastic cabinet with wall mount. Coordinate controller location with owner.
	Schedule 40 PVC sleeves. Size two sizes larger than pipe to be sleeved or as noted
	Schedule 40 PVC 2" Mainline
	Class 160 PVC lateral lines size as noted

Bare root trees are not acceptable. If balled and burlapped trees are installed, all non-biodegradeable wrappings will be removed and burlap will be folded down to enhance water absorption. If wire baskets are used in conjunction with balled and burlapped trees, remove the first few rows of each basket at time of installation. Install rootball level with existing finish grade, 3-5" above finish grade on sites containing clay. Tree wrapping or pruning paint onto pruned branches shall not be acceptable.

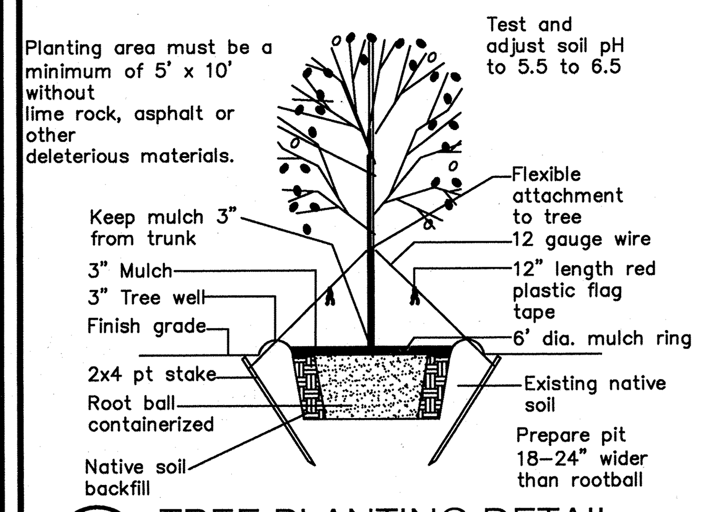

TREE PLANTING DETAIL

Remove support attachments after one complete growing season

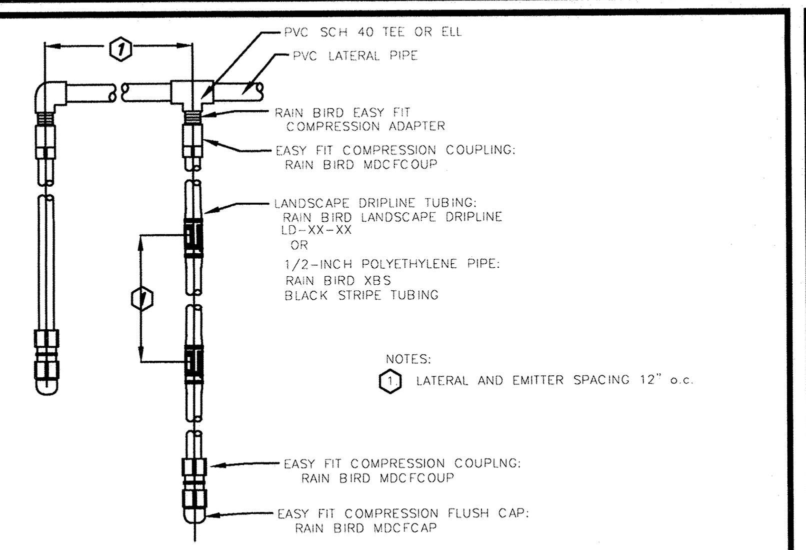

DRIPLINE LATERAL DETAIL

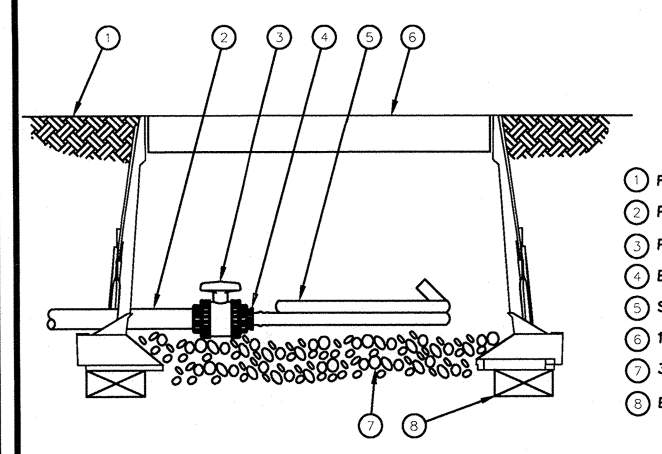

1. FINISH GRADE
2. PVC DRIP MANIFOLD PIPE
3. PVC 1" X 3/4" TRUE UNION BALL VALVE
4. EASY FIT MALE X BARB ADAPTER: RAIN BIRD XFF-MA-075
5. SUB-SURFACE DRIPLINE: RAIN BIRD XF SERIES BLANK TUBING
6. 12-INCH VALVE BOX WITH COVER: RAIN BIRD VB-STD
7. 3-INCH MINIMUM DEPTH OF 3/4" WASHED GRAVEL
8. BRICK (1 OF 2)

FLUSH POINT DETAIL

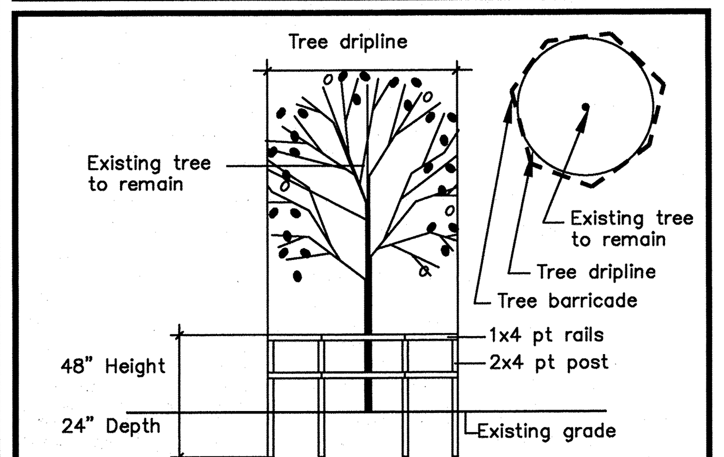

TREE PROTECTION DETAIL

GENERAL LANDSCAPE NOTES

1. All plant materials shall be Florida #1 or better and installed to highest nursery standards. Plants shall be healthy, free of pest and disease.
2. All plants shall be container grown except as noted on plan.
3. All palms and trees shall have straight trunks with no twists, knotting or other defective characteristics.
4. Mulch shall be 100% Pine Bark, installed to a minimum thickness of 3". Use 3" compost mulch where shown.
5. Sod shall be 95% weed free Bahia as shown on plans, installed with tight joints.
6. All dimensions shall be field checked by the Landscape Contractor prior to construction with any discrepancies reported to the Landscape Architect.
7. All materials shall be as specified on the plans. If materials, labor or installation techniques do not adhere to the specifications, they will be rejected by the Landscape Architect with specified materials and installation carried out by the Landscape Contractor at no additional cost.
8. No substitutions of materials or changes to the drawings or specifications shall be made.
9. All required permits are to be provided by the installing contractor unless specifically stated otherwise in the specifications.
10. Contractor identification signs shall not be allowed on the project.
11. Contractor shall be responsible for all items as shown or described on this plan and specifications.
12. All proposed landscape and sod areas containing turf or weeds shall be treated with "Round-up" per manufacturer's specifications. Follow - up with an application of pre-emergent after installation.
13. Landscape Contractor shall provide all necessary site preparation required to ready the site for planting as specified.
14. The landscape Contractor shall warranty and guarantee all materials and labor for a period of 1 year for shrubs and groundcover, palms and trees. Warranty and guarantee period shall begin upon date of final acceptance.
15. All repairs and/or replacements shall be made by the Landscape Contractor within 10 working days upon notification of any deficiencies by the owner or their representative.
16. All questions regarding the Landscape Plans and Specifications shall be directed to the Landscape Architect at (727) 787-2840.

SOILS/PLANTING SOIL

Contractor shall inspect and test soils prior to installation of plant materials to determine soil quality in regards to pH, drainage, nutrients and texture. Contractor shall modify existing soils to provide a growing media suitable for proper horticultural plant growth. Additional soil amendments, fertilization, pH adjustments, and proper drainage shall be provided prior to installation of any materials.

TREE PROTECTION/MAINTENANCE NOTES

Protective barriers and the use of other measures to prevent tree damage (pesticide application, root pruning, intensive mulching to reduce soil compacting, et cetera) will be required as necessary. Any stacking of soils, debris, construction materials, vehicles, and et cetera within the required barricades is strictly prohibited. Any tree losses incurred during construction may be subject to replacement penalties.

Trees shall be trimmed or pruned in such a manner so as not to alter their natural form, growth habit or character and shall not be pruned into unnatural shapes, including circles, ovals, squares and other hard-edged geometric shapes. Not more than one-third of the tree canopy shall be trimmed or pruned in any year unless it is dead. Tree topping is not allowed under any circumstance.

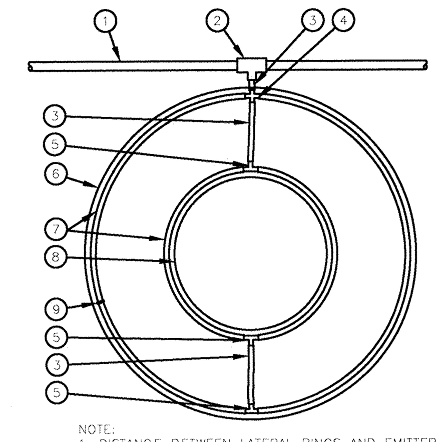

1. PVC DRIP MANIFOLD PIPE
2. PVC SCH 40 TEE OR EL
3. 3/4" POLYETHYLENE TUBING: RAIN BIRD XF SERIES BLANK TUBING
4. BARB CROSS INSERT FITTING: RAIN BIRD XFD-CROSS
5. BARB TEE INSERT FITTING: RAIN BIRD XFD-TEE
6. PROJECTED CANOPY LINE OF TREE
7. SUB-SURFACE DRIP IRRIGATION TUBING: RAIN BIRD XF-SDI SERIES TUBING PLACE AS SHOWN (LENGTH AS REQUIRED)
8. ROOT BALL
9. TIE DOWN STAKE: RAIN BIRD TDS-050 WITH BEND (QUANTITY AS REQUIRED)

NOTE:
1. DISTANCE BETWEEN LATERAL RINGS AND EMITTER SPACING TO BE BASED ON SOIL TYPE, AND TREE CANOPY. SEE RAIN BIRD XF-SDI DRIPLINE INSTALLATION GUIDE FOR SUGGESTED SPACINGS.

DRIPLINE FOR TREES DETAIL

VOLUME	MAXIMUM FLOW	PIPE SIZE
0-5 GPM	5 FEET PER SECOND	1/2" PVC PIPE
6-10 GPM	5 FEET PER SECOND	3/4" PVC PIPE
11-15 GPM	5 FEET PER SECOND	1" PVC PIPE
16-25 GPM	5 FEET PER SECOND	1 1/4" PVC PIPE
26- 35 GPM	5 FEET PER SECOND	1 1/2" PVC PIPE
36-50 GPM	5 FEET PER SECOND	2" PVC PIPE
50+ GPM	5 FEET PER SECOND	2 1/2" PVC PIPE

PIPE SIZING CHART

Know what's **below.**
Call before you dig.
811
48 Hours
Before You Dig

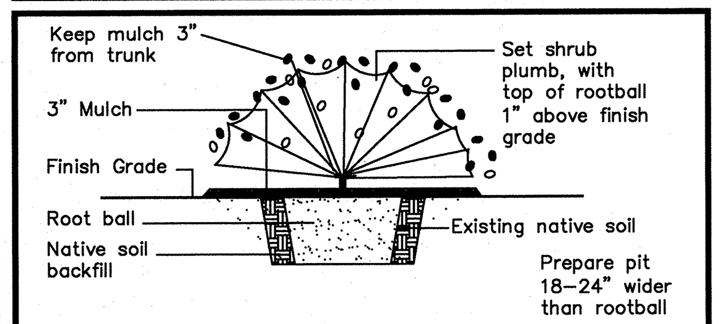

SHRUB PLANTING DETAIL

Test and adjust soil pH to 5.5 to 6.5

NOTE: IRRIGATION CONTRACTOR SHALL INSTALL NETAFIM UNDERGROUND DRIP AT THE BASE OF EACH INSTALLED TREE. PROVIDE A MINIMUM OF 6 EMITTERS PER TREE. INSTALL TREE IRRIGATION ON SEPARATE IRRIGATION ZONE AT CONTROLLER. SEE SHEET L-1 FOR TREE LOCATIONS.

DRAWING NOT VALID UNLESS SIGNED, DATED AND EMBOSSED WITH RAISED SEAL OF DESIGNING LANDSCAPE ARCHITECT

Date	Revision	Description
05.12.15	1	review comments

Date:	01.15.15
Scale:	
Design	DC
COPYRIGHT 2014	

Richard D. Copley
Registered Landscape Architect
Florida LA-0001483
Pennsylvania LA-001396-R

GENERAL NOTES AND DETAILS

RECREATION ALTERNATIVE

2840 Land O' Lakes Boulevard, Pasco County, Florida

CDA COPLEY DESIGN ASSOCIATES, INC.
1666 Laney Drive • Palm Harbor • Florida • 34683 • Phone 727 787-2840
LANDSCAPE ARCHITECTURE • SITE PLANNING
FLORIDA License # LA-0001483
PENNSYLVANIA License # LA-001396-R

JOB NO. 14029

SHEET D-1

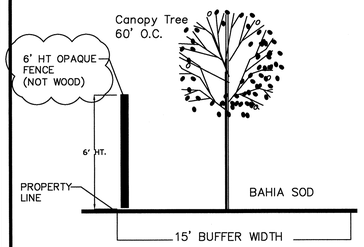

TYPE "B" 15' WIDE BUFFER WITH TREES MAX. 60' O.C. AND 6' HT. OPAQUE FENCE

TYPE B BUFFER DETAIL

see plan sheets for plan view

TREE REMOVAL/REPLACEMENTS

TREES TO BE REMOVED

SIZE INCH	OTHER OAK	TOTAL INCHES	OTHER	TOTAL INCHES
10	–	–	1	10
14	–	–	1	14
42	–	–	1	42

TOTALS: OAK = 0 OTHER = 66

REQUIRED REPLACEMENTS = 22"
OTHER (1/3 INCH PER INCH) = 22 INCHES

PROPOSED REPLACEMENTS = 36"
12 CANOPY TREES @ 3" CAL. = 36"

INCHES REQUIRED (22) – INCHES PROPOSED (36)
LESS THAN 30% PALMS PROPOSED

1 — Quantity
QV — Code

PLANT MATERIALS SCHEDULE

Quant.	Code	Botanical Name	Common Name	Specification	Native	Drought Tol.
TREES:						
3	AR	Acer rubrum	Red Maple	12–14' ht. x 4–5' spr., 3" cal.	Y	Y
2	I	Lagerstromia indica	Crape Myrtle	8' ht. x 4' spr., 3" cal.	N	Y
2	S	Liquidambar styraciflua	Sweet Gum	12–14' ht. x 4–5' spr., 3" cal.	Y	Y
2	PO	Platanus occidentalis	Sycamore	12–14' ht. x 4–5' spr., 3" cal.	Y	N
3	QV	Quercus virginiana	Live Oak	12–14' ht. x 4–5' spr., 3" cal.	Y	Y
2	TD	Taxodium distichum	Bald Cypress	12–14' ht. x 4–5' spr., 3" cal.	Y	Y
4	UA	Ulmus alata	Elm	12–14' ht. x 4–5' spr., 3" cal.	Y	Y
18 TREES						
SHRUBS:	Minimum 3 gal. container					
30	MF	Myrcianthes fragrans	Simpson's Stopper	3 gal., 18" ht. x 18" spr.	Y	N
24	F	Illicium floridanum	Florida Anise	3 gal., 18" ht. x 18" spr.	Y	N
8	RI	Raphiolepis indica	Indian Hawthorn	3 gal., 18" ht. x 18" spr.	N	Y
24	VS	Viburnum suspensum	Sandankwa Viburnum	3 gal., 18" ht. x 18" spr.	N	Y
30	VOA	Viburnum obovatum	Walter's Viburnum	3 gal., 18" ht. x 18" spr.	Y	Y
30	ZP	Zamia pumila	Coontie	3 gal., 18" ht. x 18" spr.	Y	Y
NOTE: Multi trunk trees shall have no less than 3 trunks. Each stem shall be at least 1" in caliper and 6' in height at time of installation.						

146 PLANTS PROPOSED, 114 NATIVE = 78% NATIVE PLANTS
146 SHRUBS PROPOSED, 92 DROUGHT TOLERANT = 63% DROUGHT TOLERANT PLANTS

NATIVE AND DROUGHT TOLERANT SPECIES:
"DROUGHT TOLERANT PLANTS FOR NORTH AND CENTRAL FLORIDA"
IFAS EXTENSION UNIVERSITY OF FLORIDA
GARY KNOX

INTERIOR LANDSCAPE

BUILDING S.F. FIRST FLOOR = 475 S.F.
REQUIRED LANDSCAPE AREA:
10% OF VUA

VUA = 5,350 S.F.
5,350 / 10% = 535 S.F. REQUIRED LANDSCAPE AREA

AREA PROVIDED: 915 S.F. TERMINAL AND INTERIOR ISLANDS S.F.

TREE REQUIRE,MENT:
ONE TREE PER 200 S.F. OF REQUIRED INTERIOR LANDSCAPE AREA
535 / 200 = 3 TREES REQUIRED

TREES PROVIDED = 5 TREES IN TERMINAL AND INTERIOR ISLANDS

REQUIRED BUILDING LANDSCAPE

BUILDING S.F. FIRST FLOOR = 475 S.F.
REQUIRED LANDSCAPE AREA:
475 X 10% = 47.5 S.F.
MINIMUM 5 FEET WIDE.
AREA PROVIDED: 282 S.F. (59%) MIN. 5' WIDE

BUILDING L.F. = 94'
LENGTH OF LANDSCAPE REQUIRED = 50% OF BUILDING PERIMETER – MIN. 5' WIDE
94 X 50% = 47 L.F. REQUIRED
LENGTH OF LANDSCAPE PROVIDED = 52' MIN. 5' WIDE (55%)

REQUIRED BUFFERS

NORTH BUFFER TYPE "B" 15' WIDE BUFFER WITH TREES 60' O.C., 6' HT. HEDGE 5' O.C. OR 6' HT. OPAQUE FENCE (NOT WOOD)

SOUTH BUFFER TYPE "B" 15' WIDE BUFFER WITH TREES 60' O.C., 6' HT. HEDGE 5' O.C. OR 6' HT. OPAQUE FENCE (NOT WOOD)

WEST BUFFER TYPE "B" 15' WIDE BUFFER WITH TREES 60' O.C., 6' HT. HEDGE 5' O.C. OR 6' HT. OPAQUE FENCE (NOT WOOD)

EAST BUFFER – WATER

Pasco County Landscaping Standard Notes (Pasco LDC 905.2)

1. *Maintenance Responsibility.* The County is not responsible for maintenance of any landscaping unless approved through a County maintenance agreement. (LDC 905.2-C.1.a)
2. *Clear-Sight Triangle.* Where a driveway/accessway intersects a road right-of-way or where two (2) road rights-of-way intersect, vegetation, structures, and non-vegetative visual screens shall not be located so as to interfere with the clearsight triangle as defined in this Code or the *Florida Department of Transportation, Manual of Uniform Minimum Standards*, most recent edition (Green Book), whichever is more restrictive. *(LDC 905.2-C.1.b)*
3. *Sustainable Practices.* Landscaping shall be installed so that landscaping materials meet the concept of right material/right place. Installed trees and plants shall be grouped into zones according to water, soil, climate, and light requirements. Plant groupings based on water requirements are drought tolerant, natural, and oasis. *(LDC 905.2-C.1.c)*
4. *Diversity.* A maximum of 50 percent of the plant materials used, other than trees, may be non-drought tolerant. A minimum of 30 percent of the plant materials, other than trees and turfgrass, used to fulfill the requirements of this subsection shall be native Floridian species, suitable for growth in the county. *(LDC 905.2-C.1.d)*
5. *Diversity.* No one plant species of shrubs or ground cover plants, excluding turfgrass, shall constitute more than 25 percent coverage of the overall landscape area. *(LDC 905.2-C.1.d.5)*
6. *Quality.* All plant materials shall be Florida No. 1 grade per "Grades and Standards for Nursery Plants," Florida Department of Agriculture and Consumer Services (FDACS), which is incorporated herein by reference. *(LDC 905.2-C.2.a)*
7. *Avoid Easements.* Trees shall not be planted within any easement so as to interfere with the use of that easement, nor under any present or planned overhead utility, nor in any rights-of-way without County approval through the associated review process. (LDC 905.2-C.3.c)
8. Mulch shall be used in conjunction with living plant materials so as to cover exposed soil. Mulch shall be installed to a minimum depth of three (3) inches. The mulch should not be placed directly against the plant stem or tree trunk. Mulch shall not be required for annual beds. Stone or gravel may be used to cover a maximum of 20 percent of the landscaped area. *(LDC 905.2-C.3.d)*
9. *Quality Practices.* All landscaping shall be installed in accordance with standards and practices of the Florida Nursery, Growers, and Landscape Association and the Florida Chapter of the International Society of Arboriculture. *(LDC 905.2-C.3.e)*
10. All portions of a lot upon which development has commenced, but not continued for a period of 30 days, shall be planted with a grass species or ground cover to prevent erosion and encourage soil stabilization. Adequate coverage, so as to suppress fugitive dust, shall be achieved within 45 days. *(LDC 905.2-C.3.g)*
11. All required landscaping shall be maintained in a healthy condition in perpetuity in accordance with this Code. *(LDC 905.2-E.2)*
12. Ongoing maintenance to prevent the establishment of prohibited exotic species is required. *(LDC 905.2-E.4)*

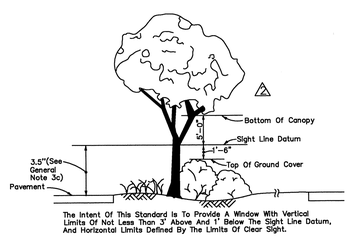

PICTORIAL
WINDOW DETAIL

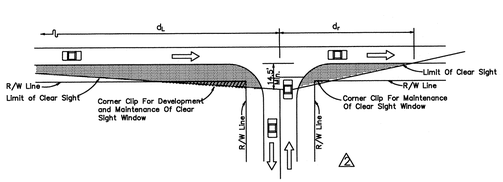

PICTORIAL
ORIGIN OF CLEAR SIGHT LINE ON MINOR ROAD

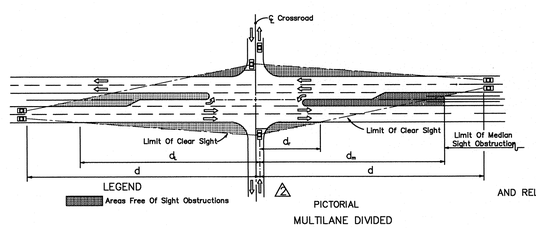

PICTORIAL
MULTILANE DIVIDED

MEDIAN 22' OR LESS				
Design Speed (MPH)	d	d_l	d_r	d_m
30	390	280	90	320
35	460	330	100	380
40	520	370	110	430
45	590	420	130	480
50	650	460	140	530
55	720	510	160	590
60	780	550	170	640
65	850	600	190	700

SIGHT DISTANCE (d)
AND RELATED DISTANCES (d_l, d_r, d_m)
(FEET)

NOTE: ERECTING OR GROWING ANT OBSTRUCTION OVER THREE AND ONE HALF FEET IN HEIGHT ABOVE THE ELEVATION OF THE LOWEST POINT ON THE CROWN OF THE ADJACENT ROADWAY WITHIN THE SIGHT VISIBILITY TRIANGLE SHALL BE PROHIBITED

SIGHT VISIBILITY TRIANGLES

COPLEY DESIGN ASSOCIATES, INC.
LANDSCAPE ARCHITECTURE • SITE PLANNING
1666 Laney Drive • Palm Harbor • Florida • 34683 • Phone 727 787-2840
FLORIDA License # LA-0001483
PENNSYLVANIA License # LA-001396-R

JOB NO. 14029

SHEET D - 2

General Notes and Details

RECREATION ALTERNATIVE

2840 Land O' Lakes Boulevard, Pasco County, Florida

Date	Revision	Dwn.
05.12.15	1 review comments	

Issue Date 01.15.15
Scale
Design DC
COPYRIGHT 2014

Richard D. Copley
Registered Landscape Architect
Florida LA-0001483
Pennsylvania LA-001396-R