PARK PLACE ENTRANCE ROAD

(fka EPPERSON RANCH BOULEVARD)

PRELIMINARY / CONSTRUCTION / STORMWATER MANAGEMENT PLANS

LOCATED IN PART OF SECTION 34, TOWNSHIP 25 SOUTH, RANGE 20 EAST

PASCO COUNTY, FLORIDA

VICINITY MAP

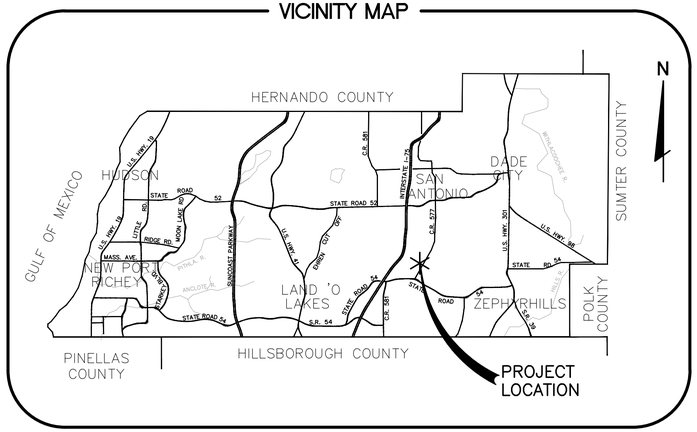

LOCATION MAP

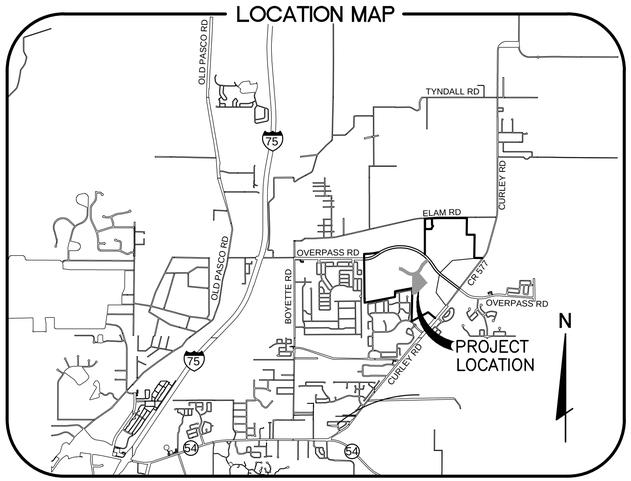

DRAWING INDEX

SHEET	TITLE
1	COVER SHEET
2	GENERAL NOTES
3	TYPICAL SECTIONS
4	OVERALL PLAN WITH AERIAL
4A	CONCEPTUAL ROADWAY CLASSIFICATION PLAN
5	HORIZONTAL CONTROL, STRIPING & SIGNAGE PLAN AND DETAILS
6 - 7	OVERALL DRAINAGE AND STORM WATER POLLUTION PREVENTION PLAN
8 - 10	PLAN AND PROFILE
10A	CROSS SECTIONS
11	POND DETAIL SHEET
12 - 13	DRAINAGE DETAILS
14 - 16	UTILITY DETAILS
17	LIFT STATION
17A	MISCELLANEOUS DETAILS
18	WETLAND IMPACT PLAN
19	LANDSCAPING PLAN & NOTES

SITE DATA

PROJECT TYPE:	ROADWAY
PASCO COUNTY PARCEL I.D. #'S:	34–25–20–0000–00100–0010 34–25–20–0000–00100–00A0
EXISTING ZONING:	EPPERSON RANCH DRI # 258, APPROVED 11/5/2008 MPUD PETITION # 6859, APPROVED 11/5/2014
FUTURE LAND USE:	RES–3
CURRENT USE:	VACANT
PROJECT AREA:	21.38 ACRES
CLASS III WETLAND AREA:	2.27 ACRES (WITHIN PROJECT AREA)
PROPOSED WETLAND IMPACTS:	0.40 ACRES (WITHIN PROJECT AREA)
NET WETLAND AREA:	1.87 ACRES (WITHIN PROJECT AREA)

LEGAL DESCRIPTION:

A PARCEL OF LAND BEING A PORTION OF THOSE CERTAIN PROPERTIES AS DESCRIBED IN OFFICIAL RECORDS BOOK 7697, PAGE 1396 AND OFFICIAL RECORDS BOOK 7767, PAGE 1467, BOTH OF THE PUBLIC RECORDS OF PASCO COUNTY. FLORIDA, LYING WITHIN SECTION 34, TOWNSHIP 25 SOUTH, RANGE 20 EAST, PASCO COUNTY, FLORIDA, BEING MORE PARTICULARLY DESCRIBED AS FOLLOWS:

COMMENCE AT THE SOUTHWEST CORNER OF SECTION 26, TOWNSHIP 25 SOUTH, RANGE 20 EAST, PASCO COUNTY, FLORIDA; THENCE S89°50'27"E, ALONG THE SOUTH LINE OF THE WEST 1/2 OF THE SOUTHWEST 1/4 OF SAID SECTION 26 (BEING THE BASIS OF BEARINGS FOR THIS LEGAL DESCRIPTION), FOR 1,310.64 FEET TO THE SOUTHEAST CORNER OF SAID WEST 1/2 OF THE SOUTHWEST 1/4 OF SECTION 26; THENCE S89°40'12"E, ALONG THE SOUTH LINE OF THE EAST 1/2 OF SAID SOUTHWEST 1/4 OF SECTION 26, FOR 526.47 FEET TO THE WESTERLY RIGHT–OF–WAY LINE OF CURLEY ROAD (COUNTY ROAD 577); THENCE LEAVING SAID SOUTH LINE OF THE EAST 1/2 OF THE SOUTHWEST 1/4 OF SECTION 26, S37°33'31"W, ALONG SAID WESTERLY RIGHT–OF–WAY LINE OF CURLEY ROAD (COUNTY ROAD 577), FOR 2,600.17 FEET; THENCE LEAVING SAID WESTERLY RIGHT– OF–WAY LINE OF CURLEY ROAD (COUNTY ROAD 577), N52°26'10"W, FOR 1,385.85 FEET TO THE POINT OF CURVATURE OF A CURVE CONCAVE NORTHEASTERLY; THENCE NORTHWESTERLY ALONG THE ARC OF SAID CURVE, HAVING A RADIUS OF 2,564.00 FEET, A CENTRAL ANGLE OF 21°28'20", AN ARC LENGTH OF 960.88 FEET, AND A CHORD BEARING N41°42'00"W FOR 955.27 FEET TO THE POINT OF REVERSE CURVATURE OF A CURVE CONCAVE SOUTHWESTERLY; THENCE NORTHWESTERLY ALONG THE ARC OF SAID CURVE, HAVING A RADIUS OF 2,436.00 FEET, A CENTRAL ANGLE OF 09°36'52", AN ARC LENGTH OF 408.77 FEET, AND A CHORD BEARING N35°46'16"W FOR 408.30 FEET TO THE POINT OF COMPOUND CURVATURE OF A CURVE CONCAVE SOUTHERLY, SAME BEING THE POINT OF BEGINNING; THENCE WESTERLY ALONG THE ARC OF SAID CURVE, HAVING A RADIUS OF 25.00 FEET, A CENTRAL ANGLE OF 91°54'06", AN ARC LENGTH OF 40.10 FEET, AND A CHORD BEARING N86°31'45"W FOR 35.94 FEET TO THE POINT OF TANGENT; THENCE S47°31'12"W, FOR 248.73 FEET TO THE POINT OF CURVATURE OF A CURVE CONCAVE SOUTHEASTERLY; THENCE SOUTHWESTERLY ALONG THE ARC OF SAID CURVE, HAVING A RADIUS OF 545.00 FEET, A CENTRAL ANGLE OF 20°05'58", AN ARC LENGTH OF 191.19 FEET, AND A CHORD BEARING S37°28'13"W FOR 190.21 FEET TO THE POINT OF INTERSECTION WITH A NON–TANGENT LINE; THENCE S27°25'14"W, FOR 157.99 FEET; THENCE S37°44'30"W, FOR 196.43 FEET TO THE POINT OF CURVATURE OF A CURVE CONCAVE NORTHWESTERLY; THENCE SOUTHWESTERLY ALONG THE ARC OF SAID CURVE, HAVING A RADIUS OF 630.00 FEET, A CENTRAL ANGLE OF 13°30'18", AN ARC LENGTH OF 148.49 FEET, AND A CHORD BEARING S44°29'39"W FOR 148.15 FEET TO THE POINT OF INTERSECTION WITH A NON–TANGENT LINE; THENCE S51°35'35"E, FOR 112.18 FEET; THENCE S52°54'44"E, FOR 109.10 FEET TO THE POINT OF INTERSECTION WITH A NON–TANGENT CURVE, CONCAVE SOUTHWESTERLY; THENCE SOUTHEASTERLY ALONG THE ARC OF SAID CURVE, FROM A RADIAL BEARING OF S41°41'33"W, HAVING A RADIUS OF 645.00 FEET, A CENTRAL ANGLE OF 33°35'14", AN ARC LENGTH OF 378.10 FEET, AND A CHORD BEARING S31°30'50"E FOR 372.71 FEET TO THE POINT OF TANGENT; THENCE S14°43'13"E, FOR 163.92 FEET TO THE POINT OF CURVATURE OF A CURVE CONCAVE WESTERLY; THENCE SOUTHERLY ALONG THE ARC OF SAID CURVE, HAVING A RADIUS OF 209.00 FEET, A CENTRAL ANGLE OF 44°12'44", AN ARC LENGTH OF 161.27 FEET, AND A CHORD BEARING S07°22'08"W FOR 157.30 FEET TO THE POINT OF INTERSECTION WITH A NON–TANGENT LINE; THENCE S44°02'47"W, FOR 107.56 FEET; THENCE S39°07'11"W, FOR 110.00 FEET; THENCE S28°21'02"W, FOR 55.99 FEET; THENCE S39°30'29"W, FOR 110.00 FEET; THENCE S40°08'13"W, FOR 17.50 FEET TO THE POINT OF INTERSECTION WITH A NON–TANGENT CURVE, CONCAVE NORTHEASTERLY; THENCE NORTHWESTERLY ALONG THE ARC OF SAID CURVE, FROM A RADIAL BEARING OF N39°07'11"E, HAVING A RADIUS OF 195.00 FEET, A CENTRAL ANGLE OF 51°07'20", AN ARC LENGTH OF 173.99 FEET, AND A CHORD BEARING N25°10'09"W FOR 168.27 FEET TO THE POINT OF TANGENT; THENCE N00°14'31"E, FOR 349.36 FEET TO THE POINT OF CURVATURE OF A CURVE CONCAVE WESTERLY; THENCE NORTHERLY ALONG THE ARC OF SAID CURVE, HAVING A RADIUS OF 567.00 FEET, A CENTRAL ANGLE OF 18°03'40", AN ARC LENGTH OF 178.73 FEET, AND A CHORD BEARING N08°47'19"W FOR 177.99 FEET TO THE POINT OF TANGENT; THENCE N17°49'09"W, FOR 368.66 FEET TO THE POINT OF INTERSECTION WITH A NON–TANGENT CURVE, CONCAVE NORTHERLY; THENCE WESTERLY ALONG THE ARC OF SAID CURVE, FROM A RADIAL BEARING OF N30°50'43"W, HAVING A RADIUS OF 630.00 FEET, A CENTRAL ANGLE OF 26°03'09", AN ARC LENGTH OF 286.46 FEET, AND A CHORD BEARING S72°10'51"W FOR 284.00 FEET TO THE POINT INTERSECTION WITH A NON–TANGENT LINE; THENCE S17°49'09"E, FOR 368.66 FEET TO THE POINT OF CURVATURE OF A CURVE CONCAVE WESTERLY; THENCE SOUTHERLY ALONG THE ARC OF SAID CURVE, HAVING A RADIUS OF 283.00 FEET, A CENTRAL ANGLE OF 18°03'40", AN ARC LENGTH OF 89.21 FEET, AND A CHORD BEARING S08°47'19"E FOR 88.84 FEET TO THE POINT OF TANGENT; THENCE S00°14'31"W, FOR 349.36 FEET TO THE POINT OF CURVATURE OF A CURVE CONCAVE NORTHEASTERLY; THENCE SOUTHEASTERLY ALONG THE ARC OF SAID CURVE, HAVING A RADIUS OF 479.00 FEET, A CENTRAL ANGLE OF 51°07'20", AN ARC LENGTH OF 427.39 FEET, AND A CHORD BEARING S25°19'09"E FOR 413.35 FEET TO THE POINT OF TANGENT; THENCE S50°52'49"E, FOR 203.62 FEET; THENCE S39°07'11"W, FOR 39.24 FEET; THENCE S51°54'58"W, FOR 669.96 FEET TO THE POINT OF INTERSECTION WITH THE EASTERLY LINE OF BRIDGEWATER PHASE 4, AS RECORDED IN PLAT BOOK 51, PAGE 1, OF THE PUBLIC RECORDS OF PASCO COUNTY, FLORIDA; THENCE N01°53'31"E ALONG SAID EASTERLY LINE OF BRIDGEWATER PHASE 4, FOR 774.88 FEET TO THE NORTHEAST CORNER OF SAID BRIDGEWATER PHASE 4; THENCE N05°14'56"W, FOR 189.66 FEET; THENCE N10°32'09"W, FOR 65.00 FEET; THENCE N17°36'50"W, FOR 65.50 FEET; THENCE N40°24'02"W, FOR 74.95 FEET; THENCE N10°32'09"W, FOR 100.09 FEET TO THE POINT OF CURVATURE OF A CURVE CONCAVE EASTERLY; THENCE NORTHERLY ALONG THE ARC OF SAID CURVE, HAVING A RADIUS OF 259.00 FEET, A CENTRAL ANGLE OF 20°49'06", AN ARC LENGTH OF 94.11 FEET, AND A CHORD BEARING N00°07'36"W FOR 93.59 FEET TO THE POINT OF INTERSECTION WITH A NON–TANGENT LINE; THENCE N25°26'42"E, FOR 67.72 FEET; THENCE N19°17'57"E, FOR 65.00 FEET TO THE POINT OF CURVATURE OF A CURVE CONCAVE WESTERLY; THENCE NORTHERLY ALONG THE ARC OF SAID CURVE, HAVING A RADIUS OF 192.00 FEET, A CENTRAL ANGLE OF 74°12'32", AN ARC LENGTH OF 248.68 FEET, AND A CHORD BEARING N17°48'19"W FOR 231.66 FEET TO THE POINT OF TANGENT; THENCE N54°54'35"W, FOR 68.90 FEET; THENCE N35°05'25"E, FOR 47.71 FEET TO THE POINT OF INTERSECTION WITH A NON–TANGENT CURVE, CONCAVE NORTHEASTERLY; THENCE NORTHWESTERLY ALONG THE ARC OF SAID CURVE, FROM A RADIAL BEARING OF N17°25'00"E, HAVING A RADIUS OF 630.00 FEET, A CENTRAL ANGLE OF 17°40'46", AN ARC LENGTH OF 194.40 FEET, AND A CHORD BEARING N63°44'37"W FOR 193.63 FEET TO THE POINT OF TANGENT; THENCE N54°54'14"W, FOR 86.61 FEET; THENCE S35°05'46"W, FOR 50.00 FEET; THENCE N54°54'14"W, FOR 50.00 FEET; THENCE N35°05'46"E, FOR 50.00 FEET; THENCE N54°54'14"W, FOR 97.13 FEET TO THE POINT OF CURVATURE OF A CURVE CONCAVE SOUTHERLY; THENCE WESTERLY ALONG THE ARC OF SAID CURVE, HAVING A RADIUS OF 690.00 FEET, A CENTRAL ANGLE OF 27°58'13", AN ARC LENGTH OF 336.84 FEET, AND A CHORD BEARING N68°53'41"W FOR 333.50 FEET TO THE POINT OF INTERSECTION WITH A NON–TANGENT LINE; THENCE N07°07'13"E, FOR 60.00 FEET TO THE POINT OF INTERSECTION WITH A NON–TANGENT CURVE, CONCAVE SOUTHERLY; THENCE EASTERLY ALONG THE ARC OF SAID CURVE, FROM A RADIAL BEARING OF S07°07'13"W, HAVING A RADIUS OF 750.00 FEET, A CENTRAL ANGLE OF 27°58'33", AN ARC LENGTH OF 366.20 FEET, AND A CHORD BEARING S68°53'31"E FOR 362.58 FEET TO THE POINT OF TANGENT; THENCE S54°54'14"E, FOR 233.73 FEET TO THE POINT OF CURVATURE OF A CURVE CONCAVE NORTHERLY; THENCE EASTERLY ALONG THE ARC OF SAID CURVE, HAVING A RADIUS OF 570.00 FEET, A CENTRAL ANGLE OF 87°20'55", AN ARC RINGTH OF 868.98 FEET, AND A CHORD BEARING N81°24'58"E FOR 787.24 FEET TO THE POINT OF INTERSECTION WITH A NON–OF TANGENT LINE; THENCE N22°28'48"E, FOR 183.19 FEET; THENCE N27°25'14"E, FOR 157.99 FEET TO THE POINT OF CURVATURE OF A CURVE CONCAVE SOUTHEASTERLY; THENCE NORTHEASTERLY ALONG THE ARC OF SAID CURVE, HAVING A RADIUS OF 655.00 FEET, A CENTRAL ANGLE OF 20°05'58", AN ARC LENGTH OF 229.77 FEET, AND A CHORD BEARING N37°28'13"E FOR 228.60 FEET TO THE POINT OF TANGENT; THENCE N47°31'12"E, FOR 248.73 FEET TO THE POINT OF CURVATURE OF A CURVE CONCAVE WESTERLY; THENCE NORTHERLY ALONG THE ARC OF SAID CURVE, HAVING A RADIUS OF 25.00 FEET, A CENTRAL ANGLE OF 91°54'06", AN ARC LENGTH OF 40.10 FEET, AND A CHORD BEARING N01°34'09"E FOR 35.94 FEET TO THE POINT OF TANGENT; THENCE S42°28'48"E, FOR 161.66 FEET TO THE POINT OF BEGINNING.

CONTAINING 931,436 SQUARE FEET OR 21.383 ACRES, MORE OR LESS.

THESE PLANS HAVE BEEN PREPARED IN ACCORDANCE WITH THE CURRENT VERSION OF "THE MANUAL OF UNIFORM MINIMUM STANDARDS FOR DESIGN, CONSTRUCTION AND MAINTENANCE FOR STREETS AND HIGHWAYS, STATE OF FLORIDA", AND ARE IN COMPLIANCE WITH THE STANDARDS THEREIN, EXCEPT AS NOTED ON THE PLANS. ANY DEVIATIONS NOTED ON THE PLANS SUBSTANTIALLY COMPLY WITH THE INTENT OF THE STANDARDS.

811 Know what's **below.** **Call** before you dig.

FLA. STATUTE 553.851 (1979) REQUIRES A MIN. OF 2 DAYS AND A MAX. OF 5 DAYS NOTICE BEFORE YOU EXCAVATE.

STUART M. ROGERS LICENSE NO. 42718 STATE OF FLORIDA PROFESSIONAL ENGINEER

12-2-2014

JOB NO.	SCALE	DATE	DESIGNED	DRAWN	CHECKED	QC
0597-0025	137	8-8-2014	JD	AH	SR	

NO.	DATE	REVISIONS	BY	APP
1	12-19-2014	ADDED SHEET 4A & 10A		
2	11-6-2014	UPDATED AREAS		
3	11-6-2014	ADDED SHEET 17A & 19 TO PLAN SET		

DESIGNED FOR: EPPERSON RANCH, LLC
2502 NORTH ROCKY POINT DRIVE, SUITE 1050, TAMPA, FLORIDA 33607
PHONE: (813) 289-8078

PROJECT NAME: PARK PLACE ENTRANCE ROAD

SHEET NAME: COVER SHEET

FLORIDA DESIGN CONSULTANTS, INC.
THINK IT. ACHIEVE IT.
707 N. FRANKLIN STREET, 6TH FLOOR, TAMPA, FLORIDA 34655
PHONE: (800) 532 - 1047 FAX: (727) 848 - 3648 WWW.FLDESIGN.COM C.A. NO. 7421

SHEET 1 OF 19

© Copyright 2014 Florida Design Consultants, Inc. Drawings and concepts may not be used or reproduced without written permission.

K:\137\PROJDATA\ConstDocs\PLANS\EPPERSON RANCH BLVD\137_COV-ERB.dwg - 1-Cover - 12/23/2014 3:39:53 PM - ahulbert

GENERAL NOTES

1.
GENERAL NOTES

1. ALL ELEVATIONS BASED ON NAVD-1988 DATUM.

2. ALL OPEN/DISTURBED AREAS TO BE SODDED. AREAS WHERE SOD IS REQUIRED SHALL BE SAND GROWN AND STAKED AS NECESSARY TO PREVENT DISPLACEMENT. SODDED SLOPES GREATER THAN A 4:1 SLOPE SHALL BE PEGGED.

3. ELECTRICAL SERVICE WILL BE PROVIDED BY WITHLACOOCHEE RIVER ELECTRIC COOP., INC. (WREC).

4. TELEPHONE SERVICE WILL BE PROVIDED BY VERIZON.

△1

5. STREET LIGHTING SHALL BE REQUIRED THROUGHOUT THE SUBDIVISION AS PER PLANS APPROVED BY APPROPRIATE UTILITY COMPANY-CONITION OF APPROVAL AND WILL BE PROVIDED BY STREET LIGHTING TAXING DISTRICT OR OTHER APPROVED ENTITY.

6. PROPOSED DRAINAGE EASEMENTS AND UTILITY EASEMENTS SHALL BE GRANTED ON THE PLAT WHEN RECORDED. PONDS SHALL BE WITHIN DRAINAGE EASEMENTS. THE WETLANDS SHALL BE WITHIN WETLAND CONSERVATION EASEMENTS.

△1

7. THE SITE IS LOCATED WITHIN FLOOD ZONE "X" & "A". FIRST FLOOR ELEVATION SHALL BE 1' ABOVE THE 100-YEAR FLOOD ELEVATION (REFERENCE: FLOOD INSURANCE RATE MAP PANEL NO. 12101C0268F, DATED SEPTEMBER 26, 2014.

8. CONSERVATION AREAS, DETENTION PONDS AND BUFFER EASEMENTS SHALL BE OWNED AND MAINTAINED BY A HOME OWNERS ASSOCIATION, COMMUNITY DEVELOPMENT DISTRICT OR SOME OTHER APPROVED ENTITY OTHER THAN PASCO COUNTY.

9. THE CONTRACTOR SHALL NOT ENTER UPON OR IN ANY WAY ALTER ANY WETLAND AREAS, EXCEPT AS AUTHORIZED BY THE APPROPRIATE ENVIRONMENTAL PERMIT. ALL WORK IN THE VICINITY OF OPEN WATER OR WETLANDS SHALL BE PERFORMED IN COMPLIANCE WITH ANY AND ALL PERMITS.

10. ALL TREES WITHIN PROPOSED INGRESS/EGRESS EASEMENT, RIGHT OF WAYS AND DRAINAGE EASEMENTS MAY BE REMOVED.

11. THE CONTRACTOR SHALL EXERCISE EXTREME CAUTION IN THE VICINITY OF TREES TO REMAIN AND IS RESPONSIBLE FOR ANY DAMAGE RESULTING FROM HIS WORK.

12. BURN AREAS, IF PERMITTABLE, SHALL BE LIMITED TO PROPOSED PONDS AS DIRECTED BY THE OWNER OR HIS AUTHORIZED REPRESENTATIVE. CONTRACTOR SHALL BE RESPONSIBLE FOR ACQUIRING AND BEING IN COMPLIANCE WITH THE APPROPRIATE BURN PERMIT(S).

13. EXCESS FILL MATERIAL IS NOT ANTICIPATED ON THIS PROJECT.

14. NO BUFFER SHALL ENCROACH INTO THE CLEAR SITE TRIANGLE, AS DEFINED IN SECTION 200 OF THE PASCO COUNTY LAND DEVELOPMENT CODE, SO AS TO BLOCK CLEAR SITE VISIBILITY. ALL CLEAR-SITE AREAS SHALL BE KEPT FREE OF ANY SIGNAGE, PLANTINGS, TREES, ETC. IN EXCESS OF THREE-AND-A-HALF (3 1/2) FEET IN HEIGHT.

15. THE LOCATION OF EXISTING UTILITIES ARE APPROXIMATE AS SHOWN AND IT IS THE CONTRACTOR'S RESPONSIBILITY TO DETERMINE THE EXACT LOCATION OF THE UTILITIES PRIOR TO CONSTRUCTION IN THEIR VICINITY. THE CONTRACTOR SHALL NOTIFY ALL CONCERNED PUBLIC AGENCIES AND UTILITY COMPANIES IN THE AREA BEFORE BEGINNING CONSTRUCTION, INCLUDING "SUNSHINE" AT 811.

16. PRIOR TO BEGINNING WORK, THE CONTRACTOR SHALL EXPOSE ALL EXISTING UTILITIES TO BE EXTENDED, CONNECTED TO, OR CROSSED FOR VERIFICATION OF THEIR LOCATION AND ELEVATION. ANY CONFLICTS SHALL BE BROUGHT TO THE ENGINEERS ATTENTION AND BE SATISFACTORILY RESOLVED BY THE CONTRACTOR.

17. ALLOWABLE PAVEMENT WIDTHS IN PASCO COUNTY:

TYPE	PAVEMENT WIDTH
TYPE 1B	24'
TYPE 2	24'
TYPE 3	22'
TYPE 4	20'

18. IN ACCORDANCE WITH SECTION 905.2.D.6 OF THE PASCO COUNTY LAND DEVELOPMENT CODE, DRAINAGE AREAS THAT ABUT ROAD RIGHT-OF-WAYS SHALL BE PLANTED WITH TREES SELECTED FROM THE TREE LIST AT A RATE OF(1) ONE TREE PER (50) FIFTY LINEAR FEET OF POND BANK. TREES MAY BE PLANTED IN GROUPS IN ACCORDANCE WITH THE APPROVED TREE PLAN.

19. IF DURING CONSTRUCTION ACTIVITIES, ANY EVIDENCE OF HISTORIC RESOURCES, INCLUDING, BUT NOT LIMITED TO, ABORIGINAL OR HISTORIC POTTERY, PREHISTORIC STONE TOOLS, BONE OR SHELL TOOLS, HISTORIC TRASH PITS, OR HISTORIC BUILDING FOUNDATIONS ARE DISCOVERED, WORK SHALL COME TO AN IMMEDIATE STOP AND THE FLORIDA DEPARTMENT OF HISTORIC RESOURCES (STATE HISTORIC PRESERVATION OFFICER) AND PASCO COUNTY SHALL BE NOTIFIED WITHIN TWO WORKING DAYS OF THE RESOURCES BEING FOUND ON THE SITE.

20. ALL ROADWAYS WILL BE MAINTAINED BY PASCO COUNTY. THE ROADWAY DESIGN SPEED OF THIS PROJECT IS 30 MPH UNLESS OTHERWISE NOTED.

21. IF, DURING CONSTRUCTION ACTIVITIES, ANY EVIDENCE OF STATE AND FEDERALLY PROTECTED PLANT AND/OR ANIMAL SPECIES, OTHER THAN THOSE SUBJECT TO ALREADY ISSUED PERMITS, ARE DISCOVERED, WORK SHALL COME TO AN IMMEDIATE STOP, AND PASCO COUNTY SHALL BE NOTIFIED WITHIN TWO WORKING DAYS OF THE PLANT AND/OR ANIMAL SPECIES BEING FOUND.

22. ALL PROPOSED SIGNS MUST BE APPLIED FOR, APPROVED, AND PERMITTED ON AN INDIVIDUAL BASIS APART FROM ANY ULTIMATELY-APPROVED SITE PLAN. APPROVAL OF THIS SITE PLAN DOES NOT CONSTITUTE APPROVAL OF ANY SIGNAGE.

23. THE ARCHITECT/ENGINEER CERTIFIES THAT THE SITE HAS BEEN DESIGNED IN ACCORDANCE WITH THE AMERICANS WITH DISABILITIES ACT.

24. NO IRRIGATION SYSTEM OR LANDSCAPING SHALL BE INSTALLED IN ANY COUNTY OR STATE RIGHT-OF-WAY WITHOUT ISSUANCE OF APPROPRIATE RIGHT-OF-WAY USE PERMIT.

25. THE OWNER/DEVELOPER ACKNOWLEDGES THAT THE SITE AND ITS SUBSEQUENT BUILDING PERMITS SHALL COMPLY WITH ALL REZONING/MPUD CONDITIONS.

26. ALL STRUCTURES, INCLUDING BUFFER WALLS, RETAINING WALLS, SIGNAGE, ETC. REQUIRE SEPARATE BUILDING PERMITS.

27. THE CONTRACTOR SHALL CHECK PLANS FOR CONFLICTS AND DISCREPANCIES PRIOR TO CONSTRUCTION. THE CONTRACTOR SHALL NOTIFY THE OWNER'S ENGINEER OF ANY CONFLICT BEFORE PERFORMING ANY WORK IN THE AFFECTED AREA.

28. THE CONTRACTOR IS RESPONSIBLE FOR REPAIRING ANY DAMAGE TO EXISTING FACILITIES, ABOVE OR BELOW GROUND, THAT MAY OCCUR AS A RESULT OF THE WORK PERFORMED BY THE CONTRACTOR CALLED FOR IN CONTRACT.

29. IT IS THE CONTRACTOR'S RESPONSIBILITY TO BECOME FAMILIAR WITH THE PERMIT AND INSPECTION REQUIREMENTS OF THE VARIOUS GOVERNMENTAL AGENCIES. THE CONTRACTOR SHALL OBTAIN ALL NECESSARY PERMITS PRIOR TO CONSTRUCTION, AND SCHEDULE INSPECTIONS ACCORDING TO AGENCY INSTRUCTION.

30. ALL WORK PERFORMED SHALL COMPLY WITH THE REGULATIONS AND ORDINANCES OF THE VARIOUS GOVERNMENTAL AGENCIES HAVING JURISDICTION OVER THE WORK.

31. CONTRACTOR SHALL SUBMIT FOR REVIEW TO THE OWNER'S ENGINEER SHOP DRAWINGS ON ALL PRECAST AND MANUFACTURED ITEMS. FAILURE TO OBTAIN ENGINEERS COMMENTS BEFORE INSTALLATION MAY RESULT IN REMOVAL AND REPLACEMENT AT CONTRACTOR'S EXPENSE.

32. REPAIR AND REPLACEMENT OF ALL PRIVATE AND PUBLIC PROPERTY AFFECTED BY THIS WORK SHALL BE RESTORED TO A CONDITION EQUAL TO OR BETTER THAN EXISTING CONDITIONS UNLESS SPECIFICALLY EXEMPTED BY THE PLANS.

33. CONTRACTOR SHALL VERIFY THE LENGTHS OF ALL PIPE PRIOR TO BIDDING AND INSTALLATION. NO EXTRAS WILL BE APPROVED FOR ADDITIONAL PIPE LUMP SUM CONTRACTS EXCEPT AS A RESULT FROM PLAN CHANGES.

34. ADJUSTMENTS OF INLETS, JUNCTION BOXES, MANHOLE TOPS, WATER VALVES, WATER METERS, ECT. SHALL BE INCLUDED IN THE CONTRACTOR'S BID AND NO CLAIM SHALL BE MADE AGAINST THE OWNER OR ENGINEER FOR THESE ADJUSTMENTS, IF REQUIRED.

35. IT WILL BE NECESSARY TO EXAMINE, COORDINATE AND ADJUST ACCORDINGLY THE PROPOSED LOCATIONS OF THE VARIOUS COMPONENTS OF THE SITE UTILITIES. IT SHALL BE THE RESPONSIBILITY OF THE CONTRACTOR TO SUBMIT COORDINATION DRAWINGS SHOWING PIPE SIZES, STRUCTURES, AND ELEVATIONS. THE CONTRACTOR SHALL BE RESPONSIBLE FOR THE SCHEDULING AND COORDINATION OF THE ALL UNDERGROUND WORK ASSOCIATED WITH THIS PROJECT

36. UPON COMPLETION OF THE LAND DEVELOPMENT CONSTRUCTION, A PROFESSIONAL ENGINEER SHALL PROVIDE A CERTIFICATION TO PASCO COUNTY THAT THE PROJECT COMPLIES WITH THE RECOMMENDATIONS OF THE GEOTECHNICAL/GEOLOGICAL ENGINEERING REPORT.

SAFETY

1. DURING THE CONSTRUCTION AND MAINTENANCE OF THIS PROJECT, ALL SAFETY REGULATIONS ARE TO BE ENFORCED. THE CONTRACTOR OR HIS HIS REPRESENTATIVE SHALL BE RESPONSIBLE FOR THE CONTROL AND SAFETY OF THE TRAVELING PUBLIC AND THE SAFETY OF HIS PERSONNEL.

2. THE CONTRACTOR SHALL BE RESPONSIBLE FOR PROTECTING EXCAVATIONS AGAINST COLLAPSE AND WILL PROVIDE BRACING, SHEETING OR SHORING AS NECESSARY. DEWATERING TRENCHES SHALL BE KEPT DRY WHILE PIPE AND APPURTENANCES ARE BEING PLACED.

3. LABOR SAFETY REGULATIONS SHALL CONFORM TO THE PROVISIONS SET FORTH BY OSHA IN THE FEDERAL REGISTER OF THE DEPARTMENT OF TRANSPORTATION.

4. CONTRACTOR SHALL PROVIDE AND MAINTAIN ITS OWN SAFETY EQUIPMENT IN ACCORDANCE WITH ITS HEALTH & SAFETY PROGRAM AND ALL OTHER APPLICABLE LEGAL AND HEALTH AND SAFETY REQUIREMENTS. THE CONTRACTOR IS ALSO RESPONSIBLE FOR PROVIDING ITS EMPLOYEES AND SUB CONTRACTORS WITH ADEQUATE INFORMATION AND TRAINING TO ENSURE THAT ALL EMPLOYEES AND SUB CONTRACTORS AND SUB CONTRACTOR'S EMPLOYEES COMPLY WITH ALL APPLICABLE REQUIREMENTS. CONTRACTOR SHALL REMAIN IN COMPLIANCE WITH ALL OCCUPATION SAFETY AND HEALTH REGULATIONS AS WELL AS THE ENVIRONMENTAL PROTECTION LAWS. THE FOLLOWING IS NOT TO BE PERCEIVED AS THE ENTIRE SAFETY PROGRAM BUT JUST BASIC REQUIREMENTS.

5. ALL EXCAVATIONS BY THE CONTRACTOR SHALL CONFORM TO THE REQUIREMENTS OF THE DEPARTMENT OF LABOR'S OCCUPATIONAL SAFETY AND HEALTH ADMINISTRATION RULES AND REGULATIONS. PARTICULAR ATTENTION MUST BE PAID TO THE CONSTRUCTION STANDARDS FOR EXCAVATIONS, 29 CFR PART 1926, SUBPART P.

6. THE MINIMUM STANDARDS AS SET FORTH IN THE CURRENT EDITION OF "THE STATE OF FLORIDA, MANUAL ON TRAFFIC CONTROL AND SAFE PRACTICES FOR STREET AND HIGHWAY CONSTRUCTION, MAINTENANCE AND UTILITY OPERATIONS" SHALL BE FOLLOWED IN THE DESIGN APPLICATION, INSTALLATION, MAINTENANCE AND REMOVAL OF ALL TRAFFIC CONTROL DEVICES, WARNING DEVICES AND BARRIERS NECESSARY TO PROTECT THE PUBLIC AND WORKMEN FROM HAZARDS WITHIN THE PROJECT LIMITS.

7. ALL TRAFFIC CONTROL MARKINGS AND DEVICES SHALL CONFORM TO THE PROVISIONS SET FORTH IN THE MANUAL ON UNIFORM TRAFFIC CONTROL DEVICES PREPARED BY THE U.S. DEPARTMENT OF TRANSPORTATION FEDERAL HIGHWAY ADMINISTRATION.

8. IT SHALL BE THE SOLE RESPONSIBILITY OF THE CONTRACTOR TO COMPLY AND ENFORCE ALL APPLICABLE SAFETY REGULATIONS. THE ABOVE INFORMATION HAS BEEN PROVIDED FOR THE CONTRACTOR'S INFORMATION ONLY AND DOES NOT IMPLY THAT THE OWNER OR ENGINEER WILL INSPECT AND/OR ENFORCE SAFETY REGULATIONS.

9. THE CONTRACTOR SHALL EXERCISE EXTREME CAUTION IN AREAS OF BURIED UTILITIES AND SHALL PROVIDE AT LEAST 48 HOURS NOTICE TO THE UTILITY COMPANIES PRIOR TO CONSTRUCTION TO OBTAIN FIELD LOCATIONS OF EXISTING UNDERGROUND UTILITIES. CALL SUNSHINE ONE AT 811.

10. THE CONTRACTOR'S MAINTENANCE OF TRAFFIC PLAN MUST BE SUBMITTED TO AND APPROVED BY, THE APPROPRIATE GOVERNMENTAL AGENCIES PRIOR TO BEGINNING ANY CONSTRUCTION.

EROSION/TURBIDITY CONTROL

1. ALL COSTS ASSOCIATED WITH ADDITIONAL TURBIDITY EROSION CONTROL ARE INCIDENTAL TO THE DEWATERING COSTS OR THE ITEM THAT REQUIRES THE DEWATERING.

2. THE CONTRACTOR SHALL BE RESPONSIBLE FOR REQUIREMENTS CONTAINED IN NPDES EROSION AND SEDIMENTATION CONTROLS INCLUDING ALL REPORTING AND MAINTENANCE REQUIREMENTS UNTIL SUCH TIME AS THE PROJECT INFRASTRUCTURE IS ACCEPTED BY AGENCIES HAVING JURISDICTION.

3. THE INSTALLATION OF TEMPORARY EROSION CONTROL BARRIERS SHALL BE COORDINATED WITH THE CONSTRUCTION OF THE PERMANENT EROSION CONTROL FEATURES TO THE EXTENT NECESSARY TO ASSURE ECONOMICAL, EFFECTIVE AND CONTINUOUS CONTROL OF EROSION AND WATER POLLUTION THROUGHOUT THE LIFE OF THE CONSTRUCTION PHASE.

4. THE TYPE OF EROSION CONTROL BARRIERS USED SHALL BE GOVERNED BY THE NATURE OF THE CONSTRUCTION OPERATION AND SOIL TYPE THAT WILL BE EXPOSED. SILTY AND CLAYEY MATERIAL USUALLY REQUIRE SOLID SEDIMENT BARRIERS TO PREVENT TURBID WATER DISCHARGE, WHILE SANDY MATERIAL MAY NEED ONLY SILT SCREENS OR HAY BALES TO PREVENT EROSION. FLOATING TURBIDITY CURTAINS SHALL BE USED IN OPEN WATER SITUATIONS. DIVERSION DITCHES OR SWALES MAY BE REQUIRED TO PREVENT TURBID STORMWATER RUNOFF FROM BEING DISCHARGED TO WETLANDS OR OTHER WATER BODIES. IT MAY BE NECESSARY TO EMPLOY A COMBINATION OF BARRIERS, DITCHES AND OTHER EROSION/TURBIDITY CONTROL MEASURES IF CONDITIONS WARRANT.

5. CONSTRUCTION OPERATIONS IN OR ADJACENT TO WETLANDS SHALL BE RESTRICTED TO THOSE AREAS IDENTIFIED IN THE PLANS AND IN THE SPECIFICATIONS.

6. EXCEPT AS NECESSARY FOR CONSTRUCTION, EXCAVATED MATERIAL SHALL NOT BE DEPOSITED IN THE WETLANDS OR IN A POSITION CLOSE ENOUGH THERETO TO BE WASHED AWAY BY HIGH WATER OR RUNOFF.

7. WHERE PUMPS ARE TO BE USED TO REMOVE TURBID WATERS FROM CONSTRUCTION AREAS, THE WATER SHALL BE TREATED PRIOR TO DISCHARGE TO THE WETLANDS. TREATMENT METHODS INCLUDE AND ARE NOT LIMITED TO, TURBID WATER BEING PUMPED INTO GRASSED SWALES OR APPROPRIATE VEGETATED AREAS, SEDIMENT BASINS, OR CONFINED BY AN APPROPRIATE ENCLOSURE SUCH AS TURBIDITY BARRIERS, AND KEPT CONFINED UNTIL ITS TURBIDITY LEVEL MEETS STATE WATER QUALITY STANDARDS.

8. THE CONTRACTOR SHALL SCHEDULE HIS OPERATIONS SUCH THAT THE AREA OF UNPROTECTED ERODIBLE EARTH EXPOSED AT ANY ONE TIME IS NOT LARGER THAN THE MINIMUM AREA NECESSARY FOR EFFICIENT CONSTRUCTION OPERATIONS, AND THE DURATION OF EXPOSED, UNCOMPLETED CONSTRUCTION TO THE ELEMENTS SHALL BE AS SHORT AS PRACTICABLE. CLEARING AND GRUBBING SHALL BE SO SCHEDULED AND PERFORMED THAT GRADING OPERATIONS CAN FOLLOW IMMEDIATELY THEREAFTER, AND GRADING OPERATIONS SHALL BE SCHEDULED AND PERFORMED THAT PERMANENT EROSION CONTROL FEATURES CAN FOLLOW IMMEDIATELY THEREAFTER IF CONDITIONS ON THE PROJECT PERMIT.

9. THE CONTRACTOR AND/OR OWNER'S REPRESENTATIVE SHALL PROVIDE ROUTINE MAINTENANCE OF PERMANENT AND TEMPORARY EROSION CONTROL FEATURES UNTIL THE PROJECT IS COMPLETE AND ALL BARED SOILS ARE STABILIZED.

10. THE CONTRACTOR SHALL CONTROL ALL FUGITIVE DUST ORIGINATING ON THIS PROJECT BY WATERING OR OTHER METHODS AS APPROVED BY THE OWNER OR HIS AUTHORIZED REPRESENTATIVE.

11. ALL PRACTICABLE AND NECESSARY EFFORT, INCLUDING BUT NOT LIMITED TO THE USE OF STAKED HAY BALES OR STAKED SILT SCREEN BARRIERS, SHALL BE TAKEN DURING CONSTRUCTION TO CONTROL AND PREVENT EROSION AND TRANSPORT OF SEDIMENT MATERIALS TO INLETS, SURFACE DRAINS, WETLANDS AND POND AREAS. STAKED HAY BALES AND STAKED SILT SCREEN BARRIERS SHALL BE INSTALLED PRIOR TO AND MAINTAINED THROUGH CONSTRUCTION COMPLETENESS. THE CONTRACTOR SHALL BE RESPONSIBLE FOR ALL RESTORATION EFFORTS THAT MAY BE REQUIRED.

12. THE CONTRACTOR SHALL RETAIN ALL EFFLUENT FROM DEWATERING ACTIVITIES ON-SITE WITHIN ISOLATED PONDS OR WETLANDS. NO WATER FROM DEWATERING ACTIVITIES SHALL BE PERMITTED TO LEAVE THE SITE WITHOUT PRIOR WRITTEN APPROVAL FROM SWFWMD. ALL WATER FROM DEWATERING ACTIVITIES SHALL PASS THROUGH DEWATERING BAGS (EQUIVALENT TO ULTRA DEWATERING BAGS AS PRODUCED BY ULTRA TECH INTERNATIONAL, INC.) OR APPROVED ALTERNATE.

CLEARING AND SITE PREPARATION NOTES

1. PRIOR TO ANY SITE CLEARING, ALL TREES SHOWN TO REMAIN ON THE CONSTRUCTION PLANS SHALL BE PROTECTED IN ACCORDANCE WITH THE LOCAL REGULATORY AGENCY'S TREE ORDINANCE AND DETAILS CONTAINED IN THESE PLANS. IT SHALL BE THE CONTRACTOR'S RESPONSIBILITY TO MAINTAIN THESE TREES IN GOOD CONDITION

2. CONTRACTOR SHALL CLEAR AND GRUB ONLY THOSE PORTIONS OF THE SITE NECESSARY FOR CONSTRUCTION. DISTURBED AREAS WILL BE SEEDED, MULCHED, OR PLANTED WITH OTHER APPROVED LANDSCAPE MATERIAL IMMEDIATELY FOLLOWING CONSTRUCTION.

3. ALL CONSTRUCTION DEBRIS AND OTHER WASTE MATERIAL SHALL BE DISPOSED OF OFF-SITE IN ACCORDANCE WITH APPLICABLE REGULATIONS.

4. THE LOCATION OF ALL EXISTING UTILITIES SHOWN ON THE PLANS HAVE BEEN DETERMINED FROM THE BEST INFORMATION AVAILABLE AND ARE GIVEN FOR THE CONVENIENCE OF THE CONTRACTOR/SUBCONTRACTOR. THE ENGINEER ASSUMES NO RESPONSIBILITY FOR ACCURACY PRIOR TO THE START OF ANY CONSTRUCTION ACTIVITY. IT SHALL BE THE CONTRACTOR'S/SUBCONTRACTOR'S RESPONSIBILITY TO NOTIFY THE VARIOUS UTILITIES AND TO MAKE THE NECESSARY ARRANGEMENTS FOR ANY RELOCATION OF THESE UTILITIES WITH THE OWNER OF THE UTILITY. THE CONSTRUCTOR/SUBCONTRACTOR SHALL EXERCISE CAUTION WHEN CROSSING ANY UNDERGROUND UTILITY, WHETHER SHOWN ON THE PLANS OR LOCATED BY THE UTILITY COMPANY. ALL UTILITIES WHICH INTERFERE WITH THE PROPOSED CONSTRUCTION SHALL BE RELOCATED BY THE RESPECTIVE UTILITY COMPANIES AND THE CONTRACTOR/SUBCONTRACTOR SHALL COOPERATE WITH THE UTILITY COMPANIES DURING RELOCATION OPERATIONS. ANY DELAY OR INCONVENIENCE CAUSED TO THE CONTRACTOR/SUBCONTRACTOR BY THE VARIOUS UTILITIES SHALL BE INCIDENTAL TO THE CONTRACT AND NO EXTRA COMPENSATION WILL BE ALLOWED.

5. ALL TREE ROOTS EXISTING WITHIN APPROVED AREAS AND ORIGINATING FROM A PROTECTED TREE, SHALL BE SEVERED CLEAN AT THE LIMITS OF THE PRESERVED AREA AS SHOWN ON THE TREE REMOVAL PLAN.

6. ALL TRIMMING UNDERTAKEN ON A TREE PROTECTED BY THE PROVISIONS OF THE LAND DEVELOPMENT CODE SHALL BE PRUNED IN ACCORDANCE WITH THE NATIONAL ARBORIST ASSOCIATION (NAA) PRUNING STANDARDS.

7. NO GRADE CHANGES SHOULD OCCUR WITHIN THE DRIP LINE OF TREES TO REMAIN.

△3

8. ALL TREES TO REMAIN MUST BE PROTECTED BY TREE PROTECTION BARRICADES MEETING THE MINIMUM CODE STANDARDS. PROTECTIVE BARRICADES SHALL REMAIN IN PLACE UNTIL LAND ALTERATION AND CONSTRUCTION ACTIVITIES ARE COMPLETED. REMOVAL OF ORGANIC MATERIAL SHALL BE CONDUCTED ACCORDANCE TO FDOT STANDARD PER INDEX 500.

9. DURING LAND ALTERATION AND CONSTRUCTION ACTIVITIES, THE CONTRACTOR SHALL NOT REMOVE VEGETATION BY GRUBBING OR TO PLACE SOIL DEPOSITS, DEBRIS, SOLVENTS, CONSTRUCTION MATERIAL, MACHINERY OR OTHER EQUIPMENT OF ANY KIND WITHIN THE DRIP LINE OF A TREE TO REMAIN ON THE SITE UNLESS OTHERWISE APPROVED BY THE COUNTY.

10. CONTRACTOR IS TO PROVIDE EROSION CONTROL/SEDIMENTATION BARRIER (HAY BALES OR SILTATION CURTAIN) TO PREVENT SILTATION OF ADJACENT PROPERTY, STREETS, STORM SEWERS, WATERWAYS, AND EXISTING WETLANDS. IN ADDITION, CONTRACTOR SHALL PLACE STRAW MULCH, OR OTHER SUITABLE MATERIAL ON GROUND IN AREAS WHERE CONSTRUCTION RELATED TRAFFIC IS TO ENTER AND EXIT THE SITE. IF, IN THE OPINION OF THE ENGINEER AND / OR LOCAL AUTHORITIES, EXCESSIVE QUANTITIES OF EARTH ARE TRANSPORTED OFF-SITE EITHER BY NATURAL DRAINAGE OR BY VEHICULAR TRAFFIC, THE CONTRACTOR IS TO REMOVE SAID EARTH TO THE SATISFACTION OF THE ENGINEER AND/OR AUTHORITIES.

△2

11. ANY WELLS TO BE ABANDONED SHALL BE PROPERLY ABANDONED BY A LICENSED WATER WELL CONTRACTOR IN ACCORDANCE WITH RULE 40D-3.531(2), F.A.C.

SANITARY SEWER AND WATER DISTRIBUTION NOTES

1. ALL SEWER AND WATER PIPE MATERIAL AND INSTALLATIONS SHALL BE IN ACCORDANCE WITH THE PASCO COUNTY "STANDARDS FOR DESIGN AND CONSTRUCTION OF WATER, WASTEWATER, AND RECLAIMED WATER FACILITIES", LATEST EDITION. SANITARY SEWER PIPE SHALL BE PVC (SDR-35) UP TO DEPTHS OF 12 FEET, DEPTHS BETWEEN 12 FEET AND 18 FEET SHALL BE PVC (SDR-26) AND DEPTHS EXCEEDING 18 FEET SHALL BE PVC (C-900). ALL SANITARY SEWER SHALL BE COLORED GREEN. WATER PIPE 2" THROUGH 3" SHALL BE PVC (SDR-21) AND 4" THROUGH 12" SHALL BE PVC AWWA C-900, DR-18. ALL WATER PIPE SHALL BE COLORED BLUE.

2. ALL SANITARY SEWER AND POTABLE WATER SERVICE LATERALS SHALL BE MARKED WITH PAINT ON THE EDGE OF PAVEMENT AND WITH WOOD STAKES AT THE END OF SERVICE LATERALS (BLUE PAINT FOR WATER AND GREEN PAINT FOR SEWER) OR SOME OTHER APPROVED METHOD.

3. CONFLICTS OF WATER LINES WITH SANITARY SEWER AND STORM SEWER SYSTEMS SHALL BE RESOLVED BY ADJUSTING WATER LINES AS NECESSARY.

4. POTABLE WATER LINE AND SANITARY SEWER LINES SHALL HAVE A MINIMUM OF 36-INCHES OF COVER FROM PROPOSED GRADE. (UNLESS APPROVED IN WRITING BY THE PROJECT ENGINEER).

5. APPROXIMATE POTABLE WATER LINE DISTANCES ARE SHOWN BETWEEN CENTERS OF MAIN FITTINGS. THE CONTRACTOR SHALL PROVIDE ALL FITTINGS REQUIRED FOR COMPLETE SYSTEMS IN ACCORDANCE WITH GOOD CONSTRUCTION PRACTICES.

6. SEWAGE DISPOSAL SHALL BE PROVIDED BY PASCO COUNTY UTILITIES VIA EXISTING SANITARY SEWER SYSTEM.

7. POTABLE WATER SHALL BE PROVIDED BY PASCO COUNTY VIA EXISTING WATER MAIN SYSTEM.

8. FIRE PROTECTION WILL BE PROVIDED FROM HYDRANTS BY THE EXISTING PASCO COUNTY FIRE STATION NO 26.

9. AT THE TERMINATION OF EACH WATER MAIN, A GATE VALVE THE SAME SIZE AS THE WATER MAIN AND 2" TEMPORARY BLOW-OFF SHALL BE INSTALLED. VALVES AND BLOW-OFFS SHALL BE RESTRAINED AND CONSTRUCTED IN ACCORDANCE WITH THE CURRENT PASCO COUNTY STANDARDS.

10. TYPICAL-ALL WATER LINES AND FORCEMAINS DEFLECTING AROUND INLETS, TREES OR OTHER OBSTRUCTIONS SHALL USE THE PIPE DEFLECTION METHOD AS REQUIRED BY P.C.U.D.

11. CONTRACTOR SHALL PREVENT FLOATATION OF STRUCTURES DURING ALL PHASES OF CONSTRUCTION.

12. RAISED PAVEMENT MARKINGS INDICATING THE FIRE HYDRANT LOCATIONS SHALL BE PROVIDED IN ACCORDANCE WITH PASCO COUNTY CODE.

13. FIRE HYDRANTS SHALL BE INSTALLED AND IN SERVICE PRIOR TO THE ACCUMULATION OF COMBUSTIBLES.

14. FIRE HYDRANTS MUST BE FLOW TESTED AND COLOR-CODED. BASED ON FLOW RESULTS, THE CAPS (TOP AND 3 SIDES) ARE TO BE COLOR CODED: 0-500 GPM RED CLASS A, 500-1000 GPM ORANGE CLASS B, 1000-1500 GPM GREEN CLASS A, AND 1500+ GPM BLUE CLASS AA. ALL HYDRANT BODIES ARE TO BE BASE COLORED YELLOW.

15. THE SANITARY SEWER PLUGS SHALL BE INSTALLED AT THE BEGINNING OF CONSTRUCTION AND SHALL REMAIN IN PLACE UNTIL CERTIFICATION HAS BEEN COMPLETED FOR FACILITIES TO BE PLACED INTO SERVICE.

16. ALL WATER METERS ARE TO BE LOCATED OUTSIDE OF DRIVEWAYS.

17. CONTRACTOR TO PERFORM CHLORINATING AND BACTERIOLOGICAL SAMPLING AND OBTAIN CLEARANCE OF DOMESTIC WATER SYSTEM. COPIES OF ALL BACTERIOLOGICAL TESTS TO BE SUBMITTED TO OWNER'S ENGINEER.

18. SANITARY SEWERS, FORCE MAINS AND STORM SEWERS CROSSING WATER MAIN SHALL BE LAYED TO PROVIDE A MINIMUM VERTICAL DISTANCE OF 18 INCHES BETWEEN THE INVERT OF THE UPPER PIPE AND THE CROWN OF THE LOWER PIPE WHENEVER POSSIBLE.

19. ALL JOINTS ON THE WATER MAIN WITHIN 20 FEET OF THE CROSSING MUST BE LEAK FREE AND MECHANICALLY RESTRAINED. A MINIMUM VERTICAL CLEARANCE OF 6 INCHES MUST BE MAINTAINED AT THE CROSSING.

20. ALL CROSSINGS SHALL BE ARRANGED SO THAT THE SEWER PIPE JOINTS AND THE WATER MAIN JOINTS ARE EQUIDISTANT FROM THE POINT OF CROSSING (PIPES CENTERED ON THE CROSSING).

21. WHERE A NEW PIPE CONFLICTS WITH AN EXISTING PIPE, THE NEW PIPE SHALL BE CONSTRUCTED OF DIP AND THE CROSSING SHALL BE ARRANGED TO MEET THE REQUIREMENTS ABOVE.

22. IN CASES WHERE IT IS NOT POSSIBLE TO MAINTAIN A 10-FOOT HORIZONTAL SEPARATION, THE WATER MAIN MUST BE LAID IN A SEPARATE TRENCH 0R ON AN UNDISTURBED EARTH SHELF LOCATED ON ONE SIDE OF THE SEWER OR FORCE MAIN AT SUCH AN ELEVATION THAT THE BOTTOM OF THE WATER MAIN IS AT LEAST 18 INCHES ABOVE THE TOP OF THE SEWER.

23. ALL ON-SITE PVC WATER MAINS 4-12 INCHES SHALL BE IN ACCORDANCE WITH AWWA C-900 STANDARDS. ALL ON-SITE PVC WATER MAINS 2-3 INCHES SHALL BE CLASS 1120 OR 1220 (SDR 21) AND MEET REQUIREMENTS OF ASTM D-2241. WATER MAINS SMALLER THAN 2 INCHES SHALL BE CLASS 1120 OR 1220 SCHEDULE 80 AND MEET REQUIREMENTS OF ASTM D-1785.

24. PE PIPE 2 INCHES OR SMALLER SHALL MEET THE REQUIREMENTS OF ASTM D-1248.

25. ALL DUCTILE IRON PIPE SHALL CONFORM TO THE REQUIREMENTS OF ANSI STANDARDS A21.51, MINIMUM CLASS 50. IN AREAS WHERE THE SOIL IS DETERMINED TO BE CORROSIVE OR HIGH GROUND WATER IS EXPECTED, THE PIPE SHALL BE INSTALLED IN LOOSE POLYETHYLENE ENCASEMENT NOT LESS THAN 8 MILS THICK AND INSTALLED IN ACCORDANCE WITH ANSI SPECIFICATION A21.51.

26. ALL WATER SYSTEM WORK SHALL CONFORM WITH LOCAL REGULATORY STANDARDS AND SPECIFICATIONS.

27. ALL UNDERGROUND UTILITIES MUST BE IN PLACE AND TESTED OR INSPECTED PRIOR TO BASE AND PAVEMENT CONSTRUCTION.

28. ALL SANITARY SEWER WORK SHALL CONFORM WITH LOCAL REGULATORY STANDARDS AND SPECIFICATIONS.

29. ALL SANITARY SEWER MANHOLE COVERS SHALL BE TRAFFIC RATED FOR H-20 LOADING.

30. SANITARY SEWER MAINS AND LATERALS SHALL HAVE A MINIMUM COVER OF THREE (3) FEET.

31. JOINTING OF PVC PIPE USING SOLVENT CEMENTING IS NOT PERMITTED.

32. NON-METALIC FORCEMAIN PIPE WILL BE INSTALLED WITH TWO PAIR, 10 GAUGE COPPER TRACER WIRE.

33. THE CONTRACTOR SHALL PERFORM AT HIS OWN EXPENSE AN INFILTRATION OR EXFILTRATION TEST, A TELEVISION INSPECTION WITH VIDEO-TAPE RECORDS, AND A MANDREL (GO, NO GO) TEST ON ALL GRAVITY SEWERS IN ACCORDANCE WITH THE REQUIREMENTS OF THE REGULATORY AGENCY HAVING JURISDICTION. SAID TEST ARE TO BE CERTIFIED BY THE ENGINEER OF RECORD AND SUBMITTED TO THE REGULATORY AGENCY FOR APPROVAL. COORDINATION OF TESTING AND NOTIFICATION OF ALL PARITIES IS THE CONTRACTOR'S RESPONSIBILITY. THE MUNICIPALITY WILL PERFORM THE T.V. INSPECTION OF THE GRAVITY SEWER. A TESTING AGENCY APPROVED BY THE ENGINEER SHALL PERFORM THE MANDREL TESTING.

34. ALL COMPONENTS OF THE POTABLE AND RECLAIMED WATER SYSTEM (IF ANY), INCLUDING FITTINGS, HYDRANTS, CONNECTIONS AND VALVES SHALL REMAIN UNCOVERED UNTIL REVIEWED BY OWNER'S ENGINEER AND PROPERLY INSPECTED AND ACCEPTED BY THE MUNICIPALITY. PRESSURE TESTS TO BE IN ACCORDANCE WITH THE REQUIREMENTS OF THE MUNICIPALITIES. UTILITY DEPARTMENT SPECIFICATIONS. CONTRACTOR TO NOTIFY OWNER'S ENGINEER AND MUNICIPALITIES INSPECTOR FROM MUNICIPALITY 72 HOURS IN ADVANCE OF PERFORMING TEST.

35. CONTRACTOR TO CLEAN AND FLUSH WATER SERVICE CONNECTION PRIOR TO PLACING INTO SERVICE.

36. NEW OR RELOCATED, UNDERGROUND WATER MAINS SHALL BE LAID TO PROVIDE A HORIZONTAL DISTANCE OF AT LEAST THREE FEET BETWEEN THE OUTSIDE OF THE WATER MAIN AND THE OUTSIDE OF ANY EXISTING OR PROPOSED STORM SEWER, STORMWATER FORCE MAIN, OR PIPELINE CONVEYING RECLAIMED WATER. THE MINIMUM HORIZONTAL SEPARATION DISTANCE BETWEEN WATER MAINS AND GRAVITY-TYPE SANITARY SEWERS SHALL BE REDUCED TO THREE FEET WHERE THE BOTTOM OF THE WATER MAIN IS LAID AT LEAST SIX INCHES ABOVE THE TOP OF THE SEWER.

37. NEW OR RELOCATED, UNDERGROUND WATER MAINS CROSSING ANY EXISTING OR PROPOSED GRAVITY SEWER OR STORM SEWER SHALL BE LAID SO THE OUTSIDE OF THE WATER MAIN IS AT LEAST SIX INCHES, AND PREFERABLY 12 INCHES, ABOVE OR AT LEAST 12 INCHES BELOW THE OUTSIDE OF THE OTHER PIPELINE. HOWEVER, IT IS PREFERABLE TO LAY THE WATER MAIN ABOVE THE OTHER PIPELINE.

38. NEW OR RELOCATED, UNDERGROUND WATER MAINS CROSSING ANY EXISTING OR PROPOSED PRESSURE-TYPE SANITARY SEWER, WASTEWATER, OR PIPELINE CONVEYING RECLAIMED WATER SHALL BE LAID SO THE OUTSIDE OF THE WATER MAIN IS AT LEAST 12 INCHES ABOVE OR BELOW THE OUTSIDE OF THE OTHER PIPELINE. HOWEVER, IT IS PREFERABLE TO LAY THE WATER MAIN ABOVE THE OTHER PIPELINE.

39. AT UTILITY CROSSINGS, ONE FULL LENGTH OF WATER MAIN PIPE SHALL BE CENTERED ABOVE OR BELOW THE OTHER PIPELINE SO THE WATER MAIN JOINTS WILL BE AS FAR AS POSSIBLE FROM THE OTHER PIPELINE.

40. SEWERS AND FORCE MAINS SHALL BE LAID AT LEAST TEN FEET (OUTSIDE TO OUTSIDE) HORIZONTALLY FROM WATER MAINS. PROVIDED THE APPLICANT DEMONSTRATES THERE IS NO REASONABLE ALTERNATIVE, THE DEPARTMENT SHALL APPROVE SMALLER HORIZONTAL SEPARATION DISTANCES FOR SEWERS IF ONE OF THE FOLLOWING CONDITIONS IS MET:

40.a. THE TOP OF THE SEWER IS INSTALLED AT LEAST 18 INCHES BELOW THE BOTTOM OF THE POTABLE WATER LINE.

40.b. THE SEWER IS ENCASED IN WATERTIGHT CARRIER PIPE OR CONCRETE.

40.c. BOTH THE SEWER AND THE WATER MAIN ARE CONSTRUCTED OF SLIP-ON OR MECHANICAL JOINT PIPE COMPLYING WITH PUBLIC WATER SUPPLY DESIGN STANDARDS AND PRESSURE TESTED TO 150 PSI TO ASSURE WATERTIGHTNESS.

40.d. THE APPLICANT PROVIDES DOCUMENTATION ACCOMPANYING THE PERMIT APPLICATION SHOWING THAT ANOTHER ALTERNATIVE WILL RESULT IN AN EQUIVALENT LEVEL OF RELIABILITY AND PUBLIC HEALTH PROTECTION.

41. SEWERS AND FORCE MAINS SHALL BE LAID AT LEAST THREE FEET (OUTSIDE TO OUTSIDE) HORIZONTALLY FROM ANY EXISTING OR PROPOSED RECLAIMED WATER LINE.

42. SEWER PIPES AND FORCE MAINS SHALL CROSS UNDER WATER MAINS, UNLESS THERE IS NO ALTERNATIVE. SEWERS AND FORCE MAINS CROSSING WATER MAINS OR RECLAIMED WATER LINES SHALL BE LAID TO PROVIDE A MINIMUM VERTICAL DISTANCE OF 18 INCHES BETWEEN THE INVERT OF THE UPPER PIPE AND THE CROWN OF THE LOWER PIPE. THE MINIMUM VERTICAL SEPARATION SHALL BE MAINTAINED WHETHER THE WATER MAIN IS ABOVE OR BELOW THE SEWER. FOR SEWER CROSSINGS, THE CROSSING SHALL BE ARRANGED SO THAT THE SEWER PIPE JOINTS ARE EQUIDISTANT AND AS FAR AS POSSIBLE FROM THE WATER MAIN JOINTS. FOR SEWERS, PROVIDED THE APPLICANT DEMONSTRATES THERE IS NO REASONABLE ALTERNATIVE, THE DEPARTMENT SHALL APPROVE SMALLER VERTICAL SEPARATION DISTANCES IF ONE OF THE FOLLOWING CONDITIONS IS MET:

42.a. THE SEWER IS ENCASED IN A WATERTIGHT CARRIER PIPE OR CONCRETE.

42.b. THE SEWER IS DESIGNED AND CONSTRUCTED EQUAL TO WATER PIPE AND PRESSURE TESTED TO 150 PSI TO ASSURE WATERTIGHTNESS.

42.c. THE APPLICANT PROVIDES DOCUMENTATION ACCOMPANYING THE PERMIT APPLICATION SHOWING THAT ANOTHER ALTERNATIVE WILL RESULT IN AN EQUIVALENT LEVEL OF RELIABILITY AND PUBLIC HEALTH PROTECTION.

43. ALL OF THE ABOVE NOTES APPLY TO ALL SANITARY SEWER AND WATER DISTRIBUTION PLAN SHEETS.

PAVING, GRADING, AND DRAINAGE NOTES

1. ALL UNDERGROUND UTILITIES INCLUDING CONDUIT FOR ELECTRICAL, CABLE, IRRIGATION AND TELEPHONE CROSSINGS SHALL BE INSTALLED PRIOR TO PAVEMENT CONSTRUCTION.

2. ALL MATERIALS AND CONSTRUCTION SHALL BE IN ACCORDANCE WITH PASCO COUNTY STANDARDS AND/OR FDOT STANDARDS AS REQUIRED.

3. ALL ROADWAY CONSTRUCTION SHALL BE PERFORMED IN ACCORDANCE WITH APPLICABLE SECTIONS OF THE CURRENT VERSION OF THE "MANUAL OF UNIFORM MINIMUM STANDARDS FOR DESIGN, CONSTRUCTION AND MAINTENANCE FOR STREETS AND HIGHWAYS", STATE OF FLORIDA DEPARTMENT OF TRANSPORTATION.

4. PIPE MEASUREMENTS ARE TO CENTER OF STRUCTURES FOR INLETS AND STORM MANHOLES. MITERED END SECTIONS AND FLARED END SECTIONS ARE PART OF PIPE LENGTHS. CURB INLET STATIONS AND OFFSETS ARE CALCULATED TO EDGE OF PAVEMENT, CENTER OF BOX. ALL PIPE LENGTHS ARE APPROXIMATE.

5. DRAINAGE RUNOFF (POST DEVELOPMENT) SHALL BE COLLECTED AND DIRECTED TO PONDS VIA PIPES AND SWALES AS INDICATED ON THE DRAINAGE PLANS.

6. STAKED SILT FENCE SHALL BE INSTALLED AT LOCATIONS SHOWN ON THE PLANS PRIOR TO ANY CONSTRUCTION ACTIVITIES IN THE VICINITY OF ADJACENT WETLAND AREAS AND SHALL BE MAINTAINED THROUGH THE PROJECT COMPLETION.

7. FOR CONTROL STRUCTURE DATA, SEE POND & DRAINAGE STRUCTURE DETAIL SHEETS AND PAVING, GRADING AND DRAINAGE PLANS.

8. AFTER CONSTRUCTION OF EACH POND CONTROL STRUCTURE IS COMPLETED, A PERMANENT BENCHMARK SHALL BE ESTABLISHED ADJACENT TO OR ON THE OUTFALL STRUCTURE.

9. CONTRACTOR SHALL PREVENT FLOATATION OF STRUCTURES DURING ALL PHASES OF CONSTRUCTION.

10. A GEOTECHNICAL TESTING COMPANY SHALL BE PRESENT DURING POND EXCAVATION TO OBSERVE POND EXCAVATION ACTIVITIES. IF LIMEROCK IS ENCOUNTERED DURING EXCAVATION, EXCAVATION IN THIS AREA WILL STOP AND A MINIMUM OF 2 FEET OF CLAY SHALL BE BACKFILLED AND COMPACTED TO THE GEOTECH'S SATISFACTION.

11. CONTRACTOR TO PROVIDE A ½" BITUMINOUS EXPANSION JOINT MATERIAL WITH SEALER AT ABUTMENT OF CONCRETE AND ANY STRUCTURE.

12. ALL PAVEMENT MARKINGS SHALL CONFORM TO FDOT STANDARD INDEX NO. 17346, SHEETS 1-7.

13. CONTRACTOR SHALL TRIM, TACK AND MATCH EXISTING PAVEMENT AT LOCATIONS WHERE NEW PAVEMENT MEETS EXISTING PAVEMENT.

14. STANDARD INDEXES REFER TO THE LATEST EDITION OF FDOT "ROADWAY AND TRAFFIC DESIGN STANDARDS".

15. ALL STORM SEWER PIPE SHALL BE REINFORCED CONCRETE CLASS III (ASTM C-76) WITH RUBBER GASKET JOINTS UNLESS OTHERWISE NOTED ON PLANS. ALL INLETS, MANHOLES AND JUNCTION BOXES SHALL CONFORM TO THE FLORIDA DOT STANDARD SPECIFICATIONS FOR ROAD AND BRIDGE CONSTRUCTION LATEST EDITION. ALL INLETS ARE TO HAVE MANHOLE LIDS FOR MAINTENANCE ACCESS. ALL PIPE ARE TO BE CUT FLUSH WITH THE INSIDE WALLS OF MANHOLES AND JUNCTION BOXES.

16. ALL DRAINAGE STRUCTURE GRATES AND COVERS WITHIN TRAFFIC AREAS SHALL BE TRAFFIC RATED FOR H-20 LOADINGS.

17. CONTRACTOR TO SOD ANY SUMPS AS INDICATED ON PLANS WITHIN ONE WEEK FOLLOWING CONSTRUCTION OF THE SUMPS.

18. ALL STORM DRAINAGE STRUCTURES DEEPER THAN TEN (10) FEET TO HAVE LADDER BARS.

19. CONTRACTOR IS RESPONSIBLE FOR OBTAINING THE NECESSARY DEWATERING PERMITS FROM THE LOCAL WATER MANAGEMENT DISTRICT OR OTHER REGULATORY AGENCY.

20. PROTECTION OF EXISTING STORM SEWERS SYSTEMS: DURING CONSTRUCTION, ALL STORM SEWER INLETS IN THE VICINITY OF THE PROJECT SHALL BE PROTECTED BY SEDIMENT TRAPS SUCH AS SECURED HAY BALES, SOD, STONE, ETC., WHICH SHALL BE MAINTAINED AND MODIFIED AS REQUIRED BE CONSTRUCTION PROGRESS.

21. MATERIALS AND CONSTRUCTION METHODS FOR STREETS AND STORM DRAINAGE CONSTRUCTION SHALL BE IN ACCORDANCE WITH THE LOCAL REGULATORY AGENCY AND THE FLORIDA DEPARTMENT OF TRANSPORTATION STANDARD SPECIFICATIONS FOR ROAD AND BRIDGE CONSTRUCTION, 1996, OR LATEST REVISION THEREOF AND SUPPLEMENTAL SPECIFICATIONS THERETO.

22. ALL RELOCATION OR MODIFICATION OF PROPOSED STORM SEWER SYSTEM SHALL NOT BE MADE WITHOUT THE APPROVAL OF THE ENGINEER OF RECORD.

23. ALL BACKFILL OVER STORM SEWER PIPE THAT IS TO BE INSTALLED UNDER ROADWAYS OR WITHIN THE EMBANKMENT, ETC. OF THE ROADWAY IS TO BE COMPACTED TO 98% DENSITY AS DETERMINED BY AASHTO T-180 PER PASCO COUNTY ENGINEERING SERVICES DEPARTMENT TESTING SPECIFICATIONS FOR CONSTRUCTION OF ROADS, STORM DRAINAGE, AND UTILITIES, OCTOBER 2006.

24. IF LIMESTONE BEDROCK IS ENCOUNTERED DURING CONSTRUCTION OF THE SURFACE WATER MANAGEMENT SYSTEM. THE DISTRICT MUST BE NOTIFIED AND CONSTRUCTION IN THE AFFECTED AREA SHALL CEASE.

25. NO EXCAVATIONS SHALL EXTEND BELOW THE PERMITTED DEPTHS/ELEVATIONS SHOWN ON THE PLANS. NO CONFINING UNIT OF CLAYEY MATERIAL SHALL BE BREACHED AND/OR LIMEROCK MATERIAL SHALL BE EXCAVATED, REGARDLESS IF THESE MATERIALS ARE ENCOUNTERED ABOVE THE PERMITTED EXCAVATION DEPTHS/ELEVATIONS. IF SUCH ARE DISCOVERED DURING EXCAVATION, THEN THE GEOTECHNICAL ENGINEER SHALL BE NOTIFIED AND EXCAVATION CEASE IN THAT AREA. IF IT IS DETERMINED THAT SUCH MATERIAL IS NON-CONFINING AND IS WITHIN THE LIMITS OF THE PERMITTED PLANS, THEN EXCAVATION MAY CONTINUE. NO CLAY MATERIAL SHALL BE LEFT EXPOSED IN ANY POND. WHERE CLAY OR SANDY-CLAYS ARE EXPOSED AT THE BOTTOM OR SIDE LIMITS OF THE EXCAVATION, THE CONTRACTOR SHALL OVER-EXCAVATE BY A MINIMUM OF TWELVE (12) INCHES AND BACKFILL WITH CLEAN SANDS TO PREVENT SUSPENSION OF FINE PARTICLES IN THE WATER COLUMN. IN NO INSTANCE SHALL THE CONTRACTOR OVER-EXCAVATE THE BOTTOM OF THE POND IN A WAY TO COMPROMISE A CONFINING LAYER OF CLAY.

26. THE STORM DRAINAGE PIPING AND FILTRATION SYSTEM SHALL BE SUBJECT TO A VISUAL OBSERVATION BY THE OWNER'S ENGINEER PRIOR TO THE PLACEMENT OF BACKFILL. CONTRACTOR TO NOTIFY THE ENGINEER 48 HOURS IN ADVANCE TO SCHEDULE.

27. THE CONTRACTOR SHALL MAINTAIN THE STORM DRAINAGE SYSTEMS UNTIL FINAL ACCEPTANCE OF THE PROJECT. THE STORM SYSTEM WILL BE REVIEWED BY THE OWNER'S ENGINEER PRIOR TO FINAL ACCEPTANCE.

28. THE CONTRACTOR IS RESPONSIBLE FOR COORDINATING APPLICABLE TESTING WITH THE SOILS ENGINEER. TEST WILL BE REQUIRED FOR EMBANKMENT, SUBGRADE, SOIL CEMENT BASE COURSE, AND ASPHALT SURFACE COURSE. ALL TESTING SHALL BE IN ACCORDANCE WITH THE PASCO COUNTY SPECIFICATIONS.

29. SOIL ENGINEER TO SUPPLY THE ENGINEER WITH A PHOTOCOPY OF ALL RESULTS. THE SOILS ENGINEER IS TO VERIFY TO THE ENGINEER OF RECORD IN WRITING THAT ALL TESTING REQUIREMENTS REQUIRED BY LOCAL REGULATORY AGENCY AND THE FLORIDA DEPARTMENT OF TRANSPORTATION(FDOT) FOR THE IMPROVEMENTS AS REQUIRED BY THE CONSTRUCTION DRAWINGS HAVE BEEN SATISFIED.

30. CONTRACTOR TO REVIEW SOILS REPORTS AND BORINGS PRIOR TO BIDDING THE PROJECT AND COMMENCING CONSTRUCTION.

31. THE DEVELOPER MAY PROVIDE SIDEWALKS IN EXCESS OF THE MINIMUM COUNTY REQUIREMENTS. THE SIDEWALKS, AS DEPICTED IN THESE DOCUMENTS, MAY BE CONSTRUCTED SIMILAR TO WHAT IS DEPICTED, BUT IN NO CASE SHALL THE CONSTRUCTED SIDEWALKS BE LESS THAN WHAT IS REQUIRED BY CODE.

32. ALL OF THE ABOVE NOTES APPLY TO ALL PAVING, GRADING AND DRAINAGE PLAN SHEETS.

△3

33. THE ENGINEER IS RESPONSIBLE FOR THE PROJECT SHALL CERTIFY TO COUNTY ENGINEERING SERVICES DIRECTOR THAT THE UNDERDRAINS HAVE BEEN PROPERLY INSTALLED PRIOR TO THE INSTALLATION OF ANY ASPHALT. CERTIFICATION SHALL STRICTLY COMPLY WITH THE UNDERDRAIN CERTIFICATION FORM AVAILABLE IN ENGINEERING SERVICES DEPARTMENT: A PROCEDURAL GUIDE FOR THE PREPARATION OF ASSURANCE OF COMPLETION AND MAINTENANCE.

STANDARD FIRE PROTECTION NOTES:

1. ALL PROJECTS MUST COMPLY WITH PASCO COUNTY FIRE HYDRANT ORDINANCE NO. 46-51.

2. FIRE HYDRANTS SHALL BE INSTALLED AND IN SERVICE PRIOR TO THE ACCUMULATION OF COMBUSTIBLES.

3. PER THE NATIONAL FIRE ASSOCIATION, NFPA-1, 16.4.3.1.3: WHERE UNDERGROUND WATER MAINS AND HYDRANTS ARE TO BE PROVIDED, THEY SHALL BE INSTALLED, COMPLETED, AND IN SERVICE PRIOR TO CONSTRUCTION WORK.

4. PER NFPA-1, 18.3.4.1: CLEARANCES OF 1.5 FEET IN FRONT OF AND TO THE SIDES OF THE FIRE HYDRANT WITH A 4 FOOT CLEARANCE TO THE REAR MUST BE MAINTAINED AT ALL TIMES.

5. GATED ENTRIES REQUIRE A SIREN OPERATING SYSTEM OR A 3M OPTICOM SYSTEM FOR EMERGENCY ACCESS.

PASCO COUNTY DEVELOPMENT REVIEW - STANDARD SITE PLAN NOTES

1. ALL UTILITY CONSTRUCTION SHALL COMPLY WITH THE PASCO COUNTY STANDARDS FOR DESIGN AND CONSTRUCTION OF WATER AND WASTEWATER FACILITIES SPECIFICATIONS, LATEST EDITION.

2. OMITTED.

3. OMITTED.

4. ALL PROPOSED SIGNS MUST BE APPLIED FOR, APPROVED, AND PERMITTED ON AN INDIVIDUAL BASIS APART FROM ANY ULTIMATELY APPROVED SITE PLAN. APPROVAL OF THIS SITE PLAN DOES NOT CONSTITUTE APPROVAL OF ANY SIGNAGE.

5. OMITTED.

6. THE ARCHITECT/ENGINEER CERTIFIES THAT THE SITE HAS BEEN DESIGNED IN ACCORDANCE WITH THE AMERICANS WITH DISABILITIES ACT.

7. OMITTED.

8. THE OWNER/DEVELOPER ACKNOWLEDGES THAT THIS APPROVAL DOES NOT INCLUDE ANY WORK IN THE COUNTY RIGHT-OF-WAY. ALL RIGHT-OF-WAY WORK SHALL BE A FUNCTION OF AN APPROVED PASCO RIGHT-OF-WAY USE PERMIT.

9. ALL CLEAR-SITE AREAS SHALL BE KEPT FREE OF ANY SIGNAGE PLANTINGS, TREES, ETC. IN EXCESS OF THREE-AND-A-HALF (3-1/2) FEET IN HEIGHT.

10. NO IRRIGATION SYSTEM OR LANDSCAPING SHALL BE INSTALLED IN ANY COUNTY OR STATE RIGHT-OF-WAY WITHOUT ISSUANCE OF APPROPRIATE RIGHT-OF-WAY USE PERMIT.

11. THE OWNER/DEVELOPER ACKNOWLEDGES THAT THE SITE AND ITS SUBSEQUENT BUILDING PERMITS SHALL COMPLY WITH ALL REZONING/MPUD/PUD CONDITIONS.

12. ALL STRUCTURES, INCLUDING BUFFER WALLS, RETAINING WALLS, SIGNAGE, ETC. REQUIRE BUILDING PERMITS.

△1

PASCO COUNTY ROADWAY GENERAL NOTES

1. SOIL EROSION AND SEDIMENT CONTROL DEVISES SHALL BE INSTALLED PRIOR TO CONSTRUCTION, MAINTAINED THROUGHOUT CONSTRUCTION AND UNTIL THE SITE IS PERMANENTLY STABILIZED. (LDC 902.2)

△3

2. IT IS THE OWNER'S RESPONSIBILITY TO INSPECT AND MAINTAIN THE WATER RETENTION SYSTEM ON A REGULAR BASIS. (LDC 902.2.M) THE STORMWATER SYSTEM WILL BE OPERATED AND MAINTAINED BY EPPERSON RANCH CDD. PASCO COUNTY WILL NOT BE RESPONSIBLE FOR MAINTENANCE OF THE STORMWATER SYSTEM.

3. ANY OFF-SITE DISTURBANCE SHALL BE RESTORED TO THE PRE OR BETTER CONDITION. (LDC 902.2)

4. AS APPLICABLE, THE OWNER/DEVELOPER WILL PROVIDE COPIES OF THE REQUIRED PERMITS FROM THE RESPECTIVE GOVERNING AGENCIES, PRIOR TO INSURANCE OF THE SDP. (LDC 902.2.C)

△3

5. WHERE FILL IS PROPOSED IT SHALL BE PLACED IN COMPLIANCE WITH THE GEOTECHNICIAL / GEOLOGICAL ENGINEERING REPORT RECOMMENDATIONS (INCLUDING ANY LIFT DEPTHS RECOMMENDED) AND COMPACTED TO A MINIMUM DENSITY OF 95% OF THE MODIFIED PROCTOR MAXIMUM DRY DENSITY. DENSITY TEST TO CONFIRM COMPACTION SHALL BE REQUIRED WITHIN THE BUILDING PAD AREA, BEFORE THE NEXT LIFE IS PLACED. UPON COMPLETION OF THE LAND DEVELOPMENT CONSTRUCTION, A PROFESSIONAL ENGINEER SHALL PROVIDE A CERTIFICATION TO PASCO COUNTY THAT THE PROJECT, INCLUDING EACH PAD AREA, COMPLIES WITH THE RECOMMENDATIONS OF THE GEOTECHNICAL/GEOLOGICAL ENGINEERING REPORT. GEOTECHNICAL INFORMATION SHOWN HEREON IS BASED ON GEOTECHNICAL REPORTS PREPARED BY FAULKNER ENGINEERING FOR EPPERSON RANCH DATED NOVEMBER 2006, DECEMBER 2009 AND AUGUST 2014. THE CONTRACTOR IS TO FOLLOW ANY REQUIREMENTS SPECIFIED IN THE REPORTS.

6. THE REMOVAL OF ORGANIC MATERIAL SHALL BE BASED ON FDOT INDEX 500 AND SHALL BE NOTED ON THE PLANS.

PASCO COUNTY UTILITY GENERAL NOTES

1. FIRE HYDRANTS SHALL BE FLOW-TESTED AND COLOR-CODED BASED ON FLOW.

2. ALL UTILITY SYSTEM-DESIGN MATERIALS AND WORKMANSHIP SHALL COMPLY WITH "STANDARDS OF DESIGN AND CONSTRUCTION OF WATER, WASTEWATER, AND RECLAIMED WATER FACILITIES SPECIFICATIONS", LATEST EDITION.

3. CONNECTIONS INTO AN EXISTING COUNTY-OWNED SYSTEM SHALL BE VIA WET TAP. WET TAPS SHALL BE PREFORMED EXCLUSIVELY BY THE UTILITIES SERVICES BRANCH AT THE DEVELOPER'S EXPENSE. EXCAVATION, BACKFILL, AND SURFACE RESTORATION SHALL BE THE CONTRACTOR'S RESPONSIBILITY. MATERIAL FOR WET TAPS LARGER THAN TWO (2) INCHES SHALL BE PROVIDED AND INSTALLED BY THE PROJECT CONTRACTOR.

4. CONTRACTOR'S RESPONSIBILITIES:
   - 2" ONLY - THIS EXCAVATED TRENCH MUST BE DRY OR THE TRENCH WILL REQUIRE ROCK AND A PUMP TO BE IN PLACE. THE MINIMUM DISTANCE FROM THE FACE OF THE VALVE TO THE WALL OF THE TRENCH IS TO BE SIX (6) FEET.
   - 3" AND LARGER - THE CONTRACTOR WILL SUPPLY A TAPPING SADDLE BEING EPOXY COATED, A TAPPING VALVE WITH MECHANICAL JOINT AND EQUIPMENT TO PROVIDE, AND CONDUCT A PRESSURE TEST. COUNTY PERSONNEL WILL WITNESS THE PRESSURE TEST WHICH MUST BE AT 150 PSI FOR DURATION OF THIRTY MINUTES.
   - THE CONTRACTOR IS RESPONSIBLE FOR THE EXCAVATION BEFORE ANY COUNTY PERSONNEL WILL ENTER AN EXCAVATED AREA. IF THE TRENCH IS FOUR FEET IN DEPTH OR DEEPER, IT WILL REQUIRE A TRENCH BOX OR SLOPING, AND A LADDER ACCORDING TO OCCUPATIONAL SAFETY AND HEALTH ADMINISTRATION (OSHA) STANDARDS.
   - THE TAPPING VALVE WILL REQUIRE A BLOCKING DEVICE MADE OF SUITABLE MATERIAL OR DEVICE. THIS BLOCKING DEVICE OR MATERIAL WILL BE PLACED UNDER THE VALVE AND REMAIN IN PLACE UNTIL THE TAP MACHINE IS REMOVED AND THE TAP IS COMPLETED.
   - IF THE CONTRACTOR HAS NOT FULFILLED HIS RESPONSIBILITIES, AS STATED ABOVE, PRIOR TO THE ARRIVAL OF PASCO COUNTY UTILITIES OPERATIONS AND MAINTENANCE TAPPING CREW, THERE WILL BE AN ADDITIONAL CHARGE OF $95.00.

△1

PASCO COUNTY GEOTECHNICAL NOTES:

SHOULD ANY NOTICEABLE SOIL SLUMPING OR SINKHOLE FORMATION BECOME EVIDENT, THE APPLICANT/DEVELOPER SHALL IMMEDIATELY NOTIFY THE COUNTY, TAMPA BAY WATER (TBW), AND SWFWMD, AND ADOPT ONE OR MORE OF THE FOLLOWING PROCEDURES AS DETERMINED TO BE APPROPRIATE BY THE COUNTY AND SWFWMD:

1. IF THE SLUMPING OR SINKHOLE FORMATION BECOMES EVIDENT BEFORE OR DURING CONSTRUCTION ACTIVITIES, STOP ALL WORK (EXCEPT FOR MITIGATION ACTIVITIES) IN THE AFFECTED AREA AND REMAIN STOPPED UNTIL THE COUNTY AND SWFWMD APPROVE RESUMING CONSTRUCTION ACTIVITIES.

2. TAKE IMMEDIATE MEASURES TO ENSURE NO SURFACE WATER DRAINS INTO THE AFFECTED AREAS.

3. VISUALLY INSPECT THE AFFECTED AREA.

4. EXCAVATE AND BACKFILL OR GROUT AS REQUIRED TO FILL THE AFFECTED AREA AND PREVENT FURTHER SUBSIDENCE.

5. USES SOIL REINFORCEMENT MATERIALS IN THE BACKFILLING OPERATION, WHEN APPROPRIATE.

6. IF THE AFFECTED AREA IS IN THE VICINITY OF A WATER-RETENTION AREA AND THE ABOVE METHODS DO NOT STABILIZE THE COLLAPSE, RELOCATE THE RETENTION AREA.

7. DISCHARGE OF STORM-WATER INTO DEPRESSIONS WITH DIRECT OR DEMONSTRATED HYDROLOGIC CONNECTION TO THE FLORIDA AQUIFER SHALL BE PROTECTED.

△3

"THE GEOTECHNICAL ENGINEER FOR THE PROJECT SHALL CERTIFY TO THE COUNTY ENGINEERING SERVICES DIRECTOR (THRU PC ENGINEERING INSPECTIONS) THAT THE SELECT MATERIAL MEETS THESE STANDARDS PRIOR TO INSTALLATION OF THE BASE. CERTIFICATION SHALL STRICTLY COMPLY WITH THE SUBGRADE CERTIFICATION FORM AVAILABLE IN "ENGINEERING SERVICES DEPARTMENT: A PROCEDURAL GUIDE FOR THE PREPARATION OF ASSURANCES OF COMPLETION AND MAINTENANCE."

STUART M. ROGERS
LICENSE
NO. 42718
STATE OF FLORIDA
PROFESSIONAL ENGINEER
12-2-2014

JOB NO.	EPN	DATE	DESIGNED	DRAWN	CHECKED	Q.C.
0597-0025	137	8-8-2014	JD	AH	SR	

NO.	DATE	REVISIONS	APP'D BY
△3	12-23-14	NOTES ADDED	
△2	12-2-14	NOTE 11 UNDER "CLEARING & SITE PREPARATION"	
△1	11-6-14	NOTES ADDED PER PASCO COUNTY COMMENTS	

DESIGNED FOR
EPPERSON RANCH, LLC
2502 NORTH ROCKY POINT DRIVE, SUITE 1050, TAMPA, FLORIDA 33607
PHONE: (813) 288-8078

PROJECT NAME
PARK PLACE ENTRANCE ROAD

SHEET NAME
GENERAL NOTES

FLORIDA DESIGN CONSULTANTS, INC.
THINK IT. ACHIEVE IT.
707 N. FRANKLIN STREET, 6TH FLOOR, TAMPA, FLORIDA 34655
PHONE: (800) 532 - 1047 FAX: (727) 848 - 3648 WWW.FLDESIGN.COM C.A. NO. 7421

©Copyright 2014 Florida Design Consultants, Inc. Drawings and concepts may not be used or reproduced without written permission.

K:\137\PROJDATA\ConstDocs\PLANS\EPPERSON RANCH BLVD\137_NOTE-ERB.dwg -- Dec 23, 2014 @ 3:40pm -- ahulbert
K:\137\PROJDATA\ConstDocs\PLANS\EPPERSON RANCH BLVD\137_NOTE-ERB.dwg, 2-Notes, 12/23/2014 3:40:05 PM, ahulbert

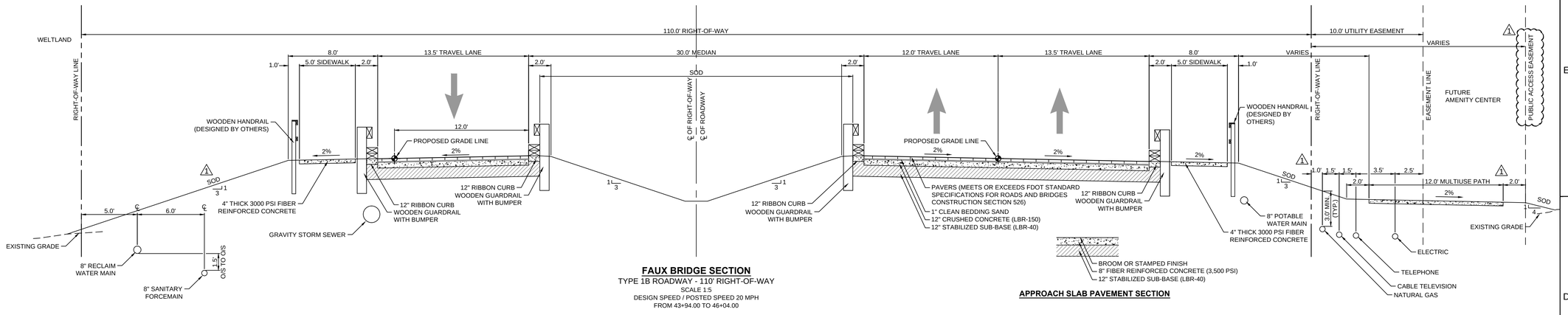

FAUX BRIDGE SECTION
TYPE 1B ROADWAY - 110' RIGHT-OF-WAY
SCALE 1:5
DESIGN SPEED / POSTED SPEED 20 MPH
FROM 43+94.00 TO 46+04.00

APPROACH SLAB PAVEMENT SECTION

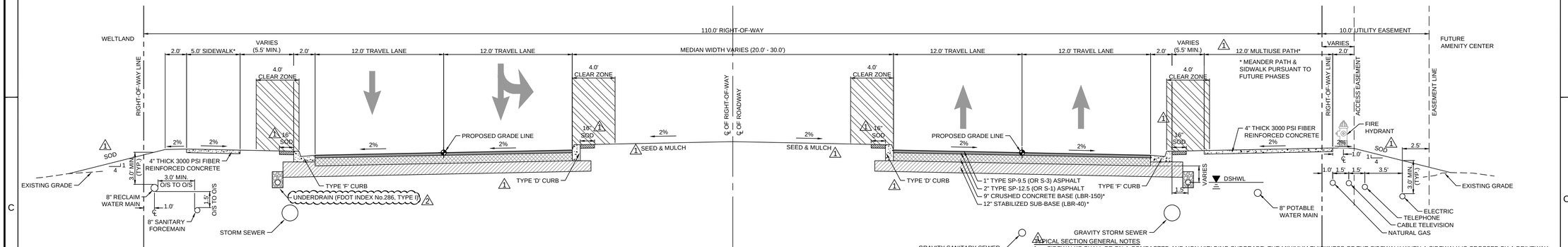

TYPICAL BOULEVARD SECTION
TYPE 1B ROADWAY - 110' RIGHT-OF-WAY
SCALE 1:5
DESIGN SPEED / POSTED SPEED 30 MPH
FROM 39+30.32 TO 43+94.00
FROM 46+04.00 TO 47+33.91

TYPICAL SECTION GENERAL NOTES

1. SIDEWALKS SHALL BE ON A COMPACTED AND NON-YIELDING SUBGRADE. THE MINIMUM THICKNESS OF THE SIDEWALK WHEN A SIDEWALK IS CROSSED BY A DRIVEWAY SHALL BE SIX (6) INCHES.
2. THE SIDEWALK / MULTIUSE PATH CLEAR ZONE SHALL BE FREE OF OBSTACLES, INCLUDING BUT NOT LIMITED TO SHRUBS, TREES, FENCES, ABOVE GROUND UTILITIES (I.E. POWER POLES, STREET LIGHTS, GUY ANCHORS, FIRE HYDRANTS, MAIL BOXES, STREET SIGNS AND UTILITY MARKERS, ETC.).
3. BELOW THE STABILIZED SUBRADE, A MINIMUM OF TWO (2) FEET OF SELECT MATERIAL, CONSISTING OF A-3 (SP) AND/OR A-2-4 WITH A MAXIMUM 15 PERCENT PASSING NUMBER 200 SIEVE, SHALL BE PROVIDED.
4. A SIXTEEN (16) INCH STRIP OF SOD SHALL BE PLACED ADJACENT TO THE STREET PAVEMENT / BACK OF CURB TO AID IN EROSION CONTROL.
5. ON SLOPES OF FOUR FEET HORIZONTAL TO ONE FEET VERTICAL (4:1) AND FLATTER, SEED AND MUCH MAY BE USED.
6. ON SLOPES FOUR FEET HORIZONTAL TO ONE FOOT VERTICAL (4:1) OR GREATER, SOD SHALL BE USED.
7. GRASS OR OTHER LOW-GROWING VEGETATION THAT IS EASILY MAINTAINED SHALL BE USED ON MEDIANS AND ROADSIDE CLEAN ZONES.
8. ALL AREAS NOT PAVED OR SODDED WITHIN THE RIGHT-OF-WAY SHALL BE SEEDED AND MULCHED.
9. THE ENGINEER RESPONSIBLE FOR THE PROJECT SHALL CERTIFY TO THE COUNTY ENGINEERING SERVICES DIRECTOR (THRU PC ENGINEERING INSPECTIONS) THAT THE SELECT MATERIAL MEETS THESE STANDARDS PRIOR TO INSTALLATION OF THE BASE. CERTIFICATION SHALL STRICTLY COMPLY WITH THE SUBGRADE CERTIFICATION FORM AVAILABLE IN "ENGINEERING SERVICES DEPARTMENT: A PROCEDURAL GUIDE FOR THE PREPARATION OF ASSURANCES OF COMPLETION AND MAINTENANCE".
10. MAINTENANCE OF THE SIDEWALKS SHALL BE RESPONSIBILITY OF THE HOMEOWNERS' ASSOCIATION / COMMUNITY DEVELOPMENT DISTRICT (CDD) / MERCHANTS' ASSOCIATION, OR AN ENTITY OTHER THAN PASCO COUNTY.
11. FOR ALL ROADS BELOW THE STABILIZED SUBGRADE, A MINIMUM OF TWO (2) FEET OF SELECT MATERIAL CONSISTING OF A-3 (SP) SOIL AND/OR A-2-4 WITH A MAXIMUM FIFTEEN (15) PERCENT PASSING NUMBER 200 SIEVE, SHALL BE PROVIDED. THE PROJECT ENGINEER RESPONSIBLE FOR THE PROJECT SHALL CERTIFY TO THE COUNTY ENGINEER THAT THE SELECT MATERIAL MEETS THESE STANDARDS PRIOR TO INSTALLATION OF THE BASE. CERTIFICATION SHALL STRICTLY COMPLY WITH THE SUBGRADE CERTIFICATION FORM AVAILABLE IN THE ENGINEERING SERVICES DEPARTMENT'S A PROCEDURAL GUIDE FOR THE PREPARATION OF ASSURANCES OF COMPLETION AND MAINTENANCE
12. PASCO COUNTY WILL NOT BE RESPONSIBLE FOR THE MAINTENANCE OF UNDERDRAINS UNDERDRAINS WILL BE MAINTAINED BY EPPERSON RANCH CDD.

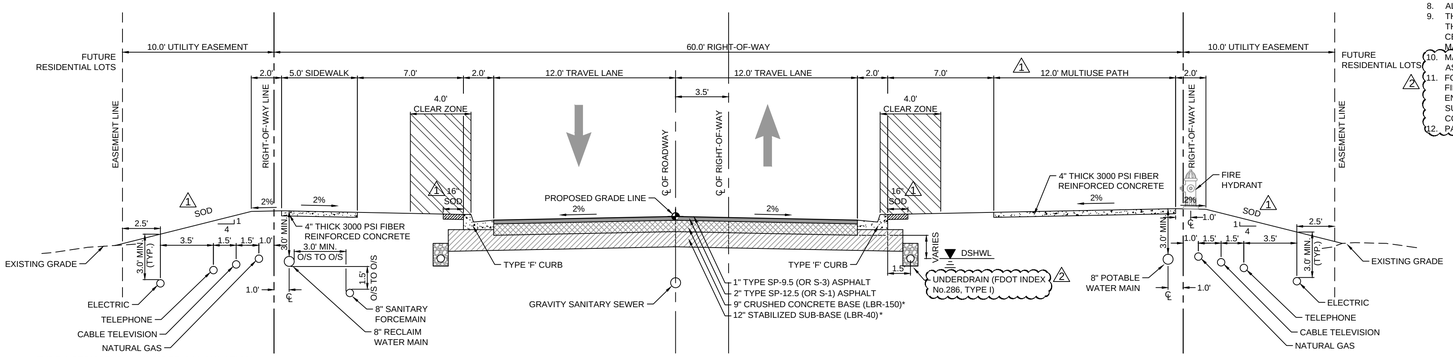

TYPE 1 STRUCTURAL NUMBER CALCULATION

LAYER DESCRIPTION	COEFF	DEPTH	CN
1" TYPE SP-9.5 (OR S-3) ASPHALT	0.44	1.0	0.44
2" TYPE SP-12.5 (OR S-1) ASPHALT	0.44	2.0	0.88
7" LIMEROCK (LBR-100)	0.18	7.0	1.26
12" STABILIZED SUB-BASE (LBR-40)	0.08	12.0	0.96
TOTAL PROVIDED			3.54 > 3.50 (MIN)

TYPICAL ROAD SECTION
TYPE 1B ROADWAY - 60' RIGHT-OF-WAY
SCALE 1:5
DESIGN SPEED / POSTED SPEED 30 MPH
FROM 24+50.00 TO 39+30.32

***ALTERNATIVE 1 PAVEMENT SECTION BID**

LAYER DESCRIPTION	COEFF	DEPTH	CN
1" TYPE SP-9.5 (OR S-3) ASPHALT	0.44	1.0	0.44
2" TYPE SP-12.5 (OR S-1) ASPHALT	0.44	2.0	0.88
9" CRUSHED CONCRETE BASE (LBR-150)	0.15	9.0	1.35
12" STABILIZED SUB-BASE (LBR-40)	0.08	12.0	0.96
TOTAL PROVIDED			3.63 > 3.50 (MIN)

***ALTERNATIVE 2 PAVEMENT SECTION BID**

LAYER DESCRIPTION	COEFF	DEPTH	CN
1" TYPE SP-9.5 (OR S-3) ASPHALT	0.44	1.0	0.44
2" TYPE SP-12.5 (OR S-1) ASPHALT	0.44	2.0	0.88
12" SOIL CEMENT (300 PSI)	0.15	12.0	1.80
12" STABILIZED SUB-BASE (LBR-20)	0.04	12.0	0.48
TOTAL PROVIDED			3.60 > 3.50 (MIN)

ALTERNATIVE REQUIRED FROM: 27+00.00 TO 38+00.00
42+25.00 TO 43+75.00
46+25.00 TO 47+33.95

NOTE:
- MINIMUM ROADWAY STRUCTURAL COEFFICIENTS AND DESIGN STANDARDS WERE BASED ON CHAPTER 900, SECTION 901.6, STREET DESIGN AND DEDICATION REQUIREMENTS, OF THE PASCO COUNTY LAND DEVELOPMENT CODE.

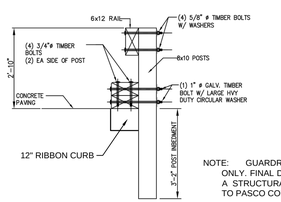

VEHICLE GUARDRAIL SECTION DETAIL

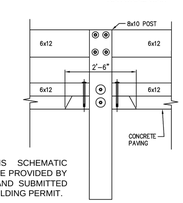

NOTE: GUARDRAIL DETAIL IS SCHEMATIC ONLY. FINAL DESIGN SHALL BE PROVIDED BY A STRUCTURAL ENGINEER AND SUBMITTED TO PASCO COUNTY FOR A BUILDING PERMIT.

VEHICLE GUARDRAIL ELEVATION DETAIL

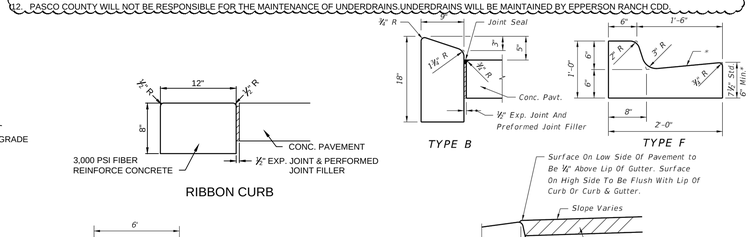

△ Applies to both high and low sides of pavement, low side shown. Applies to shoulder gutter only where adjoining traffic lanes.

CURB AND GUTTER AND TYPE A CURB ADJACENT TO FLEXIBLE PAVEMENT
GENERAL NOTES

1. For curb, gutter and curb & gutter provide ¼" - ½" contraction joints at 10' centers (max.). Contraction joints adjacent to concrete pavement on tangents and flat curves are to match the pavement joints, with intermediate joints not to exceed 10' centers. Curb, gutter and curb & gutter expansion joints shall be located in accordance with Section 520 of the Standard Specifications.
2. Ends of Curbs Types B and D shall transition from full to zero heights in 3'.

STUART M. ROGERS — LICENSE NO. 42718 — STATE OF FLORIDA — PROFESSIONAL ENGINEER
12-2-2014

JOB NO.	DATE	DESIGNED	CHECKED
0597-0025	8-8-2014	JD	SR
137		DRAWN	QC
		AH	

NO.	DATE	REVISIONS
1	12-19-14	PASCO COUNTY COMMENTS
2	11-6-14	PASCO COUNTY COMMENTS

DESIGNED FOR
EPPERSON RANCH, LLC
2502 NORTH ROCKY POINT DRIVE, SUITE 1050, TAMPA, FLORIDA 33607
PHONE: (813) 289-8078

PROJECT NAME
PARK PLACE ENTRANCE ROAD

SHEET NAME
TYPICAL SECTIONS

FLORIDA DESIGN CONSULTANTS, INC.
THINK IT. ACHIEVE IT.
707 N. FRANKLIN STREET, 6TH FLOOR, TAMPA, FLORIDA 34655
PHONE: (800) 532-1047 FAX: (727) 848-3648 WWW.FLDESIGN.COM C.A. NO. 7421

©Copyright 2014 Florida Design Consultants, Inc. Drawings and concepts may not be used or reproduced without written permission.

K:\137\PROJDATA\Const\Docs\PLANS\EPPERSON RANCH BLVD\137_TYPI-ERB.dwg - 3 Typical, 12/23/2014 3:42:13 PM, ahulbert

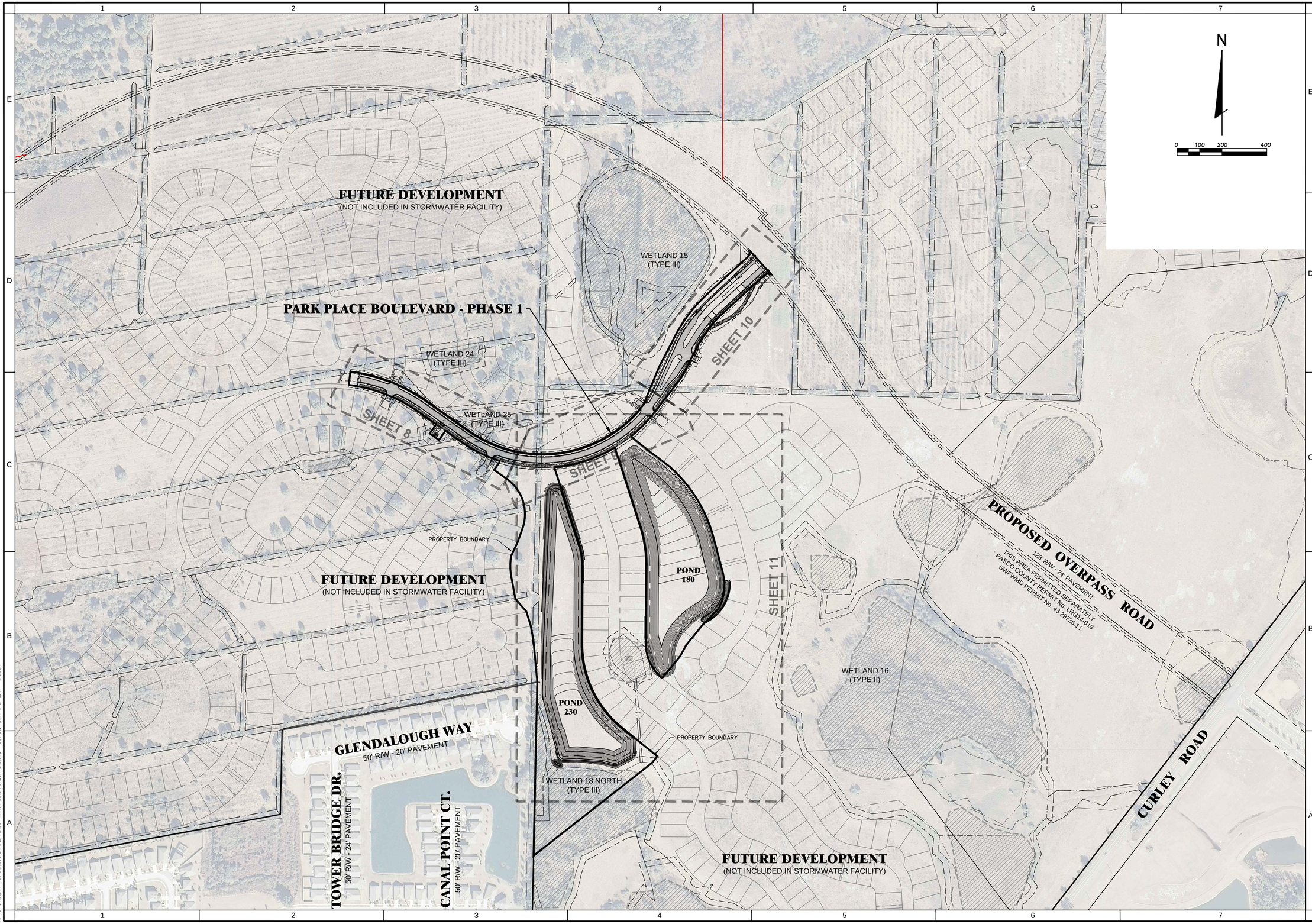

STUART M. ROGERS
LICENSE
NO. 42718
STATE OF FLORIDA
PROFESSIONAL ENGINEER

12-2-2014

JOB NO.	EPN	DATE	DESIGNED	DRAWN	CHECKED	APP'D BY
0597-0025	137	8-8-2014	JD	AH	SR	

NO.	DATE	REVISIONS

DESIGNED FOR
EPPERSON RANCH, LLC
2502 NORTH ROCKY POINT DRIVE, SUITE 1050, TAMPA, FLORIDA 33607
PHONE: (813) 288-8078

PROJECT NAME
PARK PLACE ENTRANCE ROAD

SHEET NAME
OVERALL PLAN WITH AERIAL

FLORIDA DESIGN CONSULTANTS, INC.
THINK IT. ACHIEVE IT.
707 N. FRANKLIN STREET, 6TH FLOOR, TAMPA, FLORIDA 34655
PHONE: (800) 532 - 1047 FAX: (727) 848 - 3648 WWW.FLDESIGN.COM C.A. NO. 7421

SHEET 4 OF 19

©Copyright 2014 Florida Design Consultants, Inc. Drawings and concepts may not be used or reproduced without written permission.

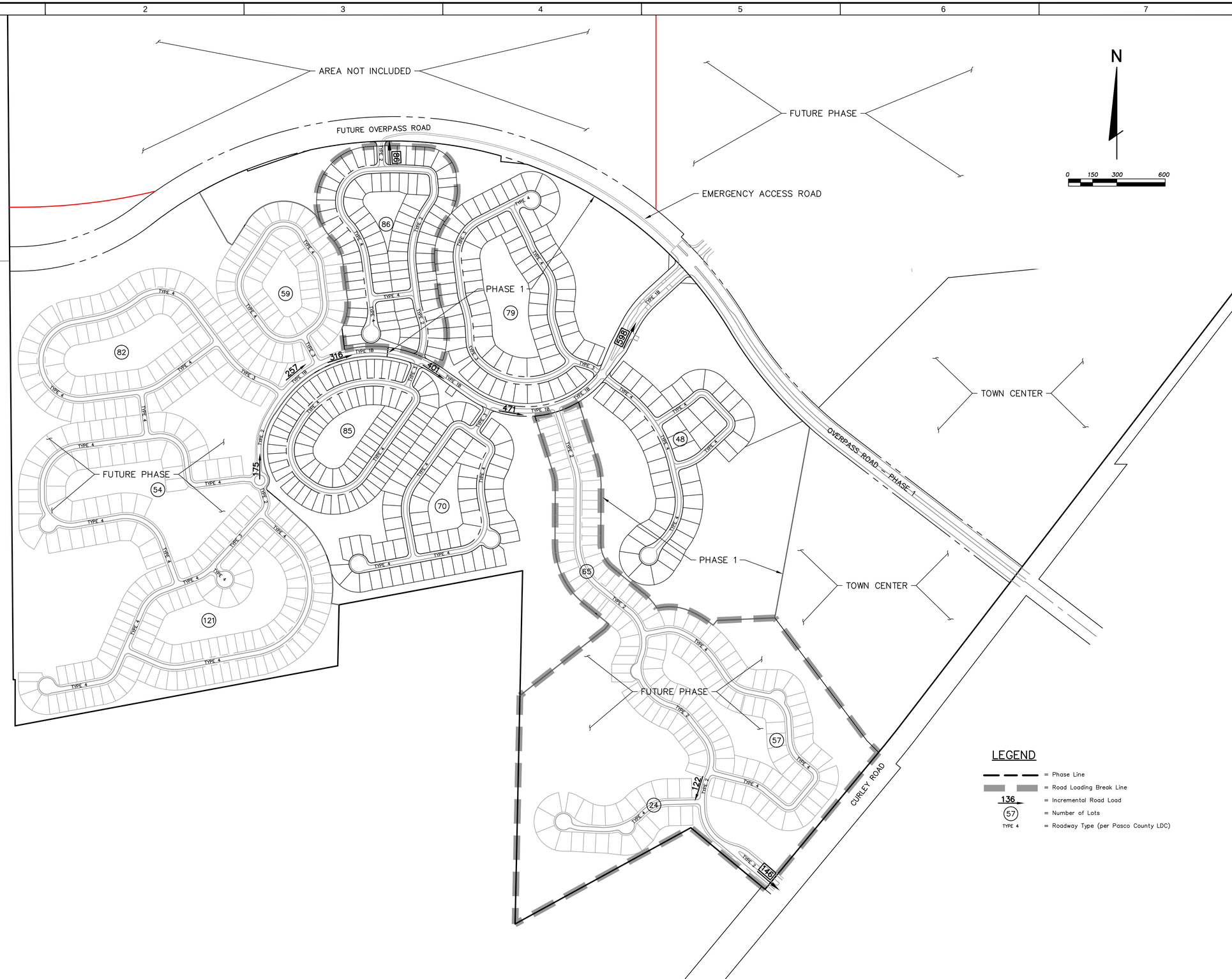

STUART M. ROGERS
LICENSE
NO. 42718
STATE OF FLORIDA
PROFESSIONAL ENGINEER

12-2-2014

JOB NO.	EPN	DATE	DESIGNED	DRAWN	CHECKED	APP'D BY
0597-0025	137	8-8-2014	JD	AH	SR	

NO.	DATE	REVISIONS

DESIGNED FOR
EPPERSON RANCH, LLC
2502 NORTH ROCKY POINT DRIVE, SUITE 1050, TAMPA, FLORIDA 33607
PHONE: (813) 288-8078

PROJECT NAME
PARK PLACE ENTRANCE ROAD

SHEET NAME
CONCEPTUAL ROADWAY CLASSIFICATION PLAN

FLORIDA DESIGN CONSULTANTS, INC.
THINK IT. ACHIEVE IT.
3030 STARKEY BOULEVARD, NEW PORT RICHEY, FLORIDA 34655
PHONE: (800) 532 - 1047 FAX: (727) 848 - 3648 WWW.FLDESIGN.COM C.A. NO. 7421

© Copyright 2014 Florida Design Consultants, Inc. Drawings and concepts may not be used or reproduced without written permission.

K:\137\PROJDATA\CONSTDOCS\PLANS\EPPERSON RANCH BLVD\137_OADROAD-ERB.dwg - Dec 23, 2014 @ 3:43pm - ahulbert

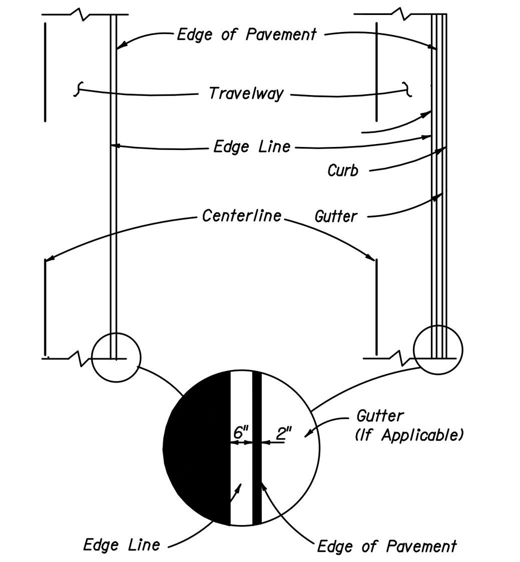

PLACEMENT OF EDGE LINES

SIGNING AND MARKING GENERAL NOTES:

1. ALL SIGNING AND STRIPING WITHIN THE PASCO COUNTY RIGHT-OF-WAY SHALL BE IN ACCORDANCE WITH FDOT STANDARD INDEX 17346.

2. ALL RPM PLACEMENT WITHIN THE PASCO COUNTY RIGHT-OF-WAY SHALL BE IN ACCORDANCE WITH FDOT STANDARD INDEX 17352.

3. WHERE PROPOSED STRIPING WILL BE IN CONFLICT WITH EXISTING STRIPING, THE EXISTING STRIPING SHALL BE REMOVED BY A PASCO COUNTY APPROVED METHOD.

4. PAVEMENT MARKINGS AND SIGNING SHALL CONFORM TO APPLICABLE SECTIONS OF FDOT SPECIFICATIONS SECTIONS 700, 706, 711, CONTAINED IN THE "FLORIDA DEPARTMENT OF TRANSPORTATION STANDARD SPECIFICATIONS FOR ROAD AND BRIDGE CONSTRUCTION", LATEST EDITION.

5. SINGLE COLUMN GROUND SIGNS SHALL BE CONSTRUCTED PER FDOT INDEXES 11860, 11862 (70 MPH WIND SPEED), AND 17302. (1)

6. ISLAND NOSES TO BE PAINTED IN ACCORDANCE WITH THE FLORIDA DEPARTMENT OF TRANSPORTATION STANDARDS, INDEX 17346.

(2) 7. TRAFFIC SIGN BREAKAWAY POSTS: ALL TRAFFIC CONTROL DEVICES (SIGNS) ARE TO BE INSTALLED WITH BREAK-AWAY POSTS IN CONFORMANCE WITH THE MUTCD MANUAL, LATEST EDITION.

8. TRAFFIC SIGN HEIGHTS: THE MINIMUM HEIGHT OF SIGNS ALONG THE SIDE OF THE ROAD ARE MEASURED VERTICALLY FROM THE BOTTOM OF THE SIGN TO THE TOP OF THE CURB (OR IN THE ABSENCE OF CURB MEASURED VERTICALLY FROM THE BOTTOM OF THE SIGN TO THE NEAR EDGE OF THE TRAVELED WAY) SHALL BE 7.0 FEET IN CONFORMANCE WITH THE MUTCD, LATEST EDITION. THE HEIGHT TO THE BOTTOM OF A SECONDARY SIGN MOUNTED BELOW ANOTHER SIGN MAY BE 1.0 FEET LESS, MEASURED VERTICALLY, OR 6.0 FEET IN HEIGHT. (5)

9. ALL CURB RAMPS SHALL BE INSTALLED PER FDOT INDEX No.304.

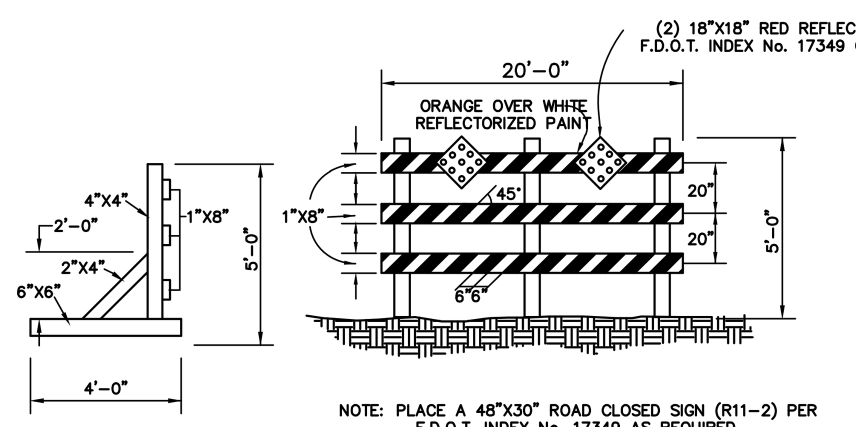

NOTE: PLACE A 48"X30" ROAD CLOSED SIGN (R11-2) PER F.D.O.T. INDEX No. 17349 AS REQUIRED.

(3) TYPE III BARRICADE DETAIL

N.T.S.

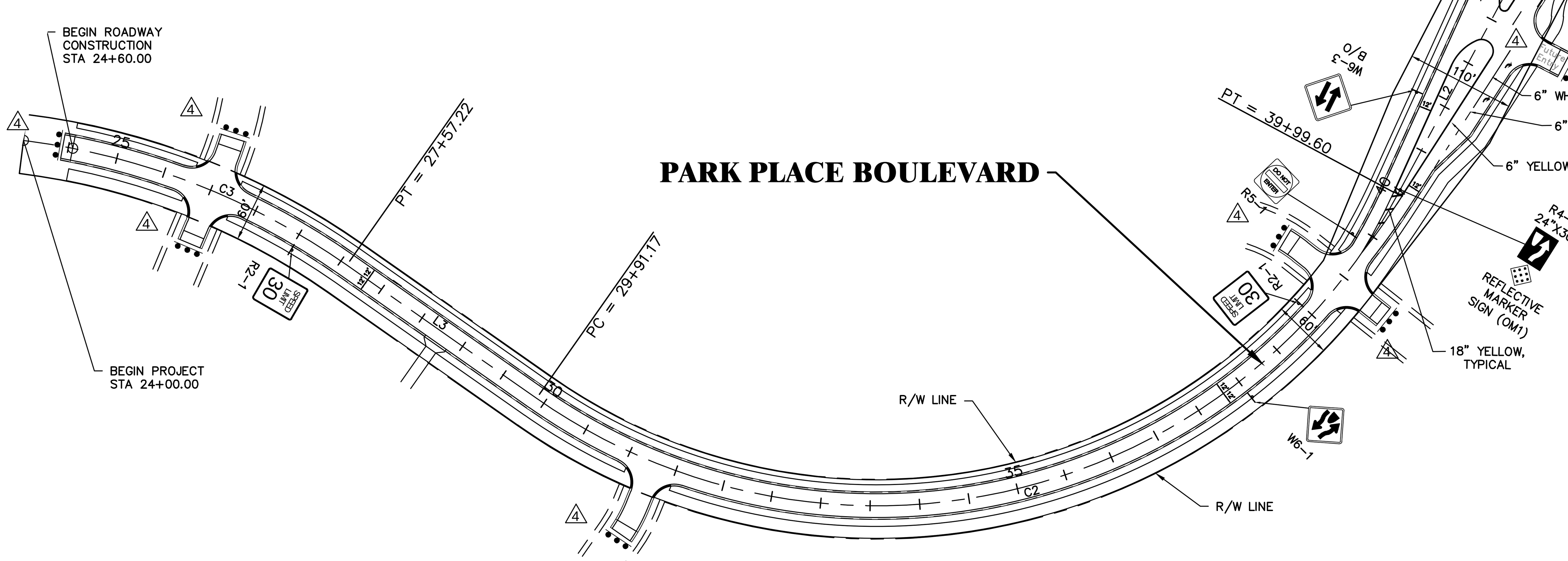

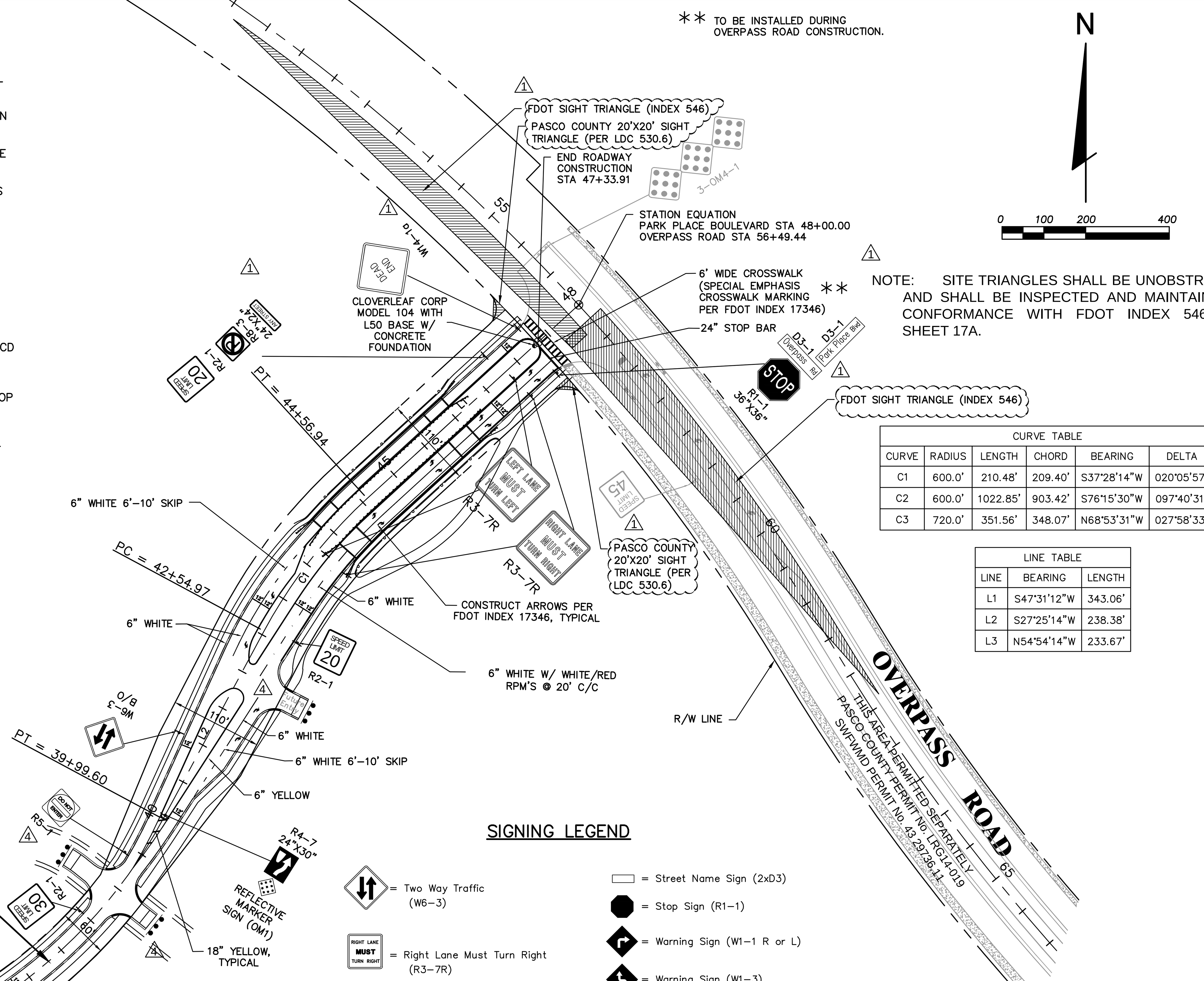

NOTE: SITE TRIANGLES SHALL BE UNOBSTRUCTED AND SHALL BE INSPECTED AND MAINTAINED IN CONFORMANCE WITH FDOT INDEX 546. SEE SHEET 17A. (1)

CURVE TABLE

CURVE	RADIUS	LENGTH	CHORD	BEARING	DELTA
C1	600.0'	210.48'	209.40'	S37°28'14"W	020°05'57"
C2	600.0'	1022.85'	903.42'	S76°15'30"W	097°40'31"
C3	720.0'	351.56'	348.07'	N68°53'31"W	027°58'33"

LINE TABLE

LINE	BEARING	LENGTH
L1	S47°31'12"W	343.06'
L2	S27°25'14"W	238.38'
L3	N54°54'14"W	233.67'

SIGNING LEGEND

- = Two Way Traffic (W6-3)
- = Right Lane Must Turn Right (R3-7R)
- = No Right Turn (R3-1)
- = No Left Turn (R3-2)
- = Hairpin Curve (W1-11)
- = Dead End (W14-1A)
- = No Outlet (W14-2A)
- A/G = Amber/Green Delineator
- = Wildlife Crossing Sign
- = Type III Barricade
- = Street Name Sign (2xD3)
- = Stop Sign (R1-1)
- = Warning Sign (W1-1 R or L)
- = Warning Sign (W1-3)
- = Advisory Speed Sign (W13-1 15 MPH)
- = Regulatory Speed Sign (R2-1 25 MPH) with No Parking Sign (R8-3A) and supplemental plate
- ONE WAY = One Way (R6-1)
- = Dead End Sign (W14-1)
- = No Outlet (W14-2)
- = Do Not Enter (R5-1)
- = Keep Right Sign (R4-7) with OM1
- = Reflective Marker Sign (OM1)
- = Reflective Marker Sign (OM4)

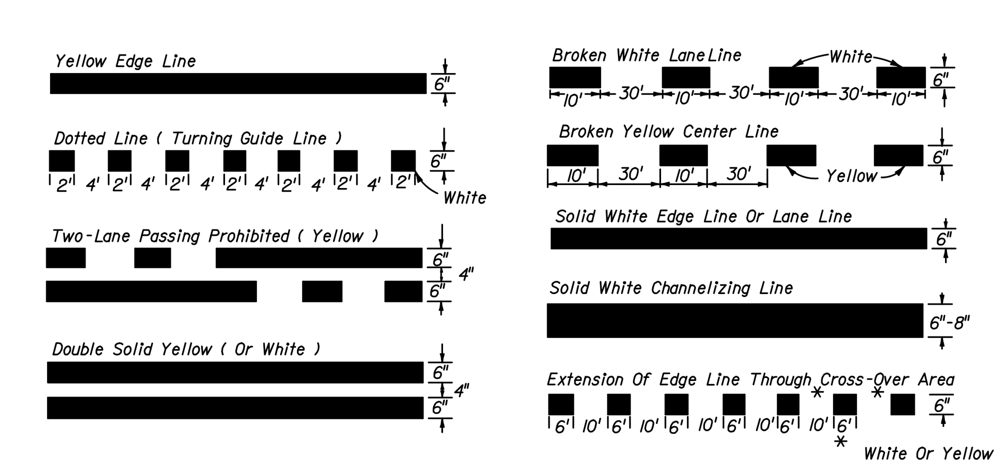

TYPES OF PERMANENT LONGITUDINAL LINES

BASIC COLOR RULE

White lines separate flows in the same direction.
Yellow lines separate flows in the opposite direction.
Yellow dotted lines may be used in special cases.

SIGNAGE AND PAVEMENT MARKING NOTES:

1. Purpose:
These specifications have been developed to provide developers with a uniform system for installation of traffic control devices on the County road system. A uniform system provides for reduced maintenance costs and a high standard of visibility for drivers. All required traffic control devices shall be installed by the developer of the project.

2. Florida State Statute 316.0745:
2.1) Any and all traffic control devices installed on the County road system shall conform to Florida State Statute 316.0745, Uniform signals and devices.
2.2) This statute requires that all devices conform to Florida Department of Transportation (FDOT) Specifications. The FDOT has adopted the Federal Manual on Uniform Traffic Control Devices as the standards to be used in the State of Florida.

3. Pavement Markings
3.1) All pavement markings shall be thermoplastic; raised pavement makers shall be class "B".
3.2) Pavement markings and raised pavement markers shall be installed on all roads classified other than residential with an ADT greater than 500 vehicles or if other conditions exist that require pavement markings, (see MUTCD section 3B-1).

4. Traffic Control Signs:
4.1) All sign blanks shall be of a type currently certified by the FDOT for use in the State of Florida.
4.2) All sign faces shall be High Intensity grade and of a type currently certified by the FDOT for use in the State of Florida.
4.3) All signs shall be no less than the standard size as specified by the Federal Manual on Uniform Traffic Control Devices. No minimum size signing shall be accepted. Larger signsshall be used when required by design speed etc.
4.4) Street name signs shall be 9" on collector and arterial roads and all signs shall have 6" series B letters. All street name signs on private roads shall be standard D3 street name signs with the colors reversed. White background with green letters and border. At intersections with county maintained roads, the county maintained road shall be green background with white letters and border.Street name sign brackets for 6" signs 30" long or less, or 9" signs 24" long or less, shall have a 5inchbladeor cross. All other street name signs shall be mounted with brackets with a 12 inch blade or8 inchcross. All street name sign brackets shall be supplied with bolts, set screws will not be accepted.
4.5) On roads to be maintained by Pasco County, all signs other than street names shall be datecoded with a yellow reflective label affixed to the back of the sign. It will be punched to show month, day, and year of installation (See Sample Label). Alternate label designs providing the date code information may be used if a sample is submitted and approved by Pasco County prior to installation.
4.6) All post systems, mounting brackets and hardware shall be of a type currently in use by the Pasco County Public Works Department and currently certified by the Florida Department of Transportation for use in the state of Florida. Alternative systems etc. shall only be used if approved by the County Engineer.

5. Certification of Materials:
5.1) All traffic control devices and materials shall be on the current FDOT APPROVED PRODUCTS LIST. Proof of certification is required for all traffic control devices
5.2) A Traffic Control Devices Submittal Data Form shall be submitted for approval prior to installation of any traffic control devices. No traffic control device shall be installed until the certification submittal has been approved by the Traffic Operations Division. These forms are available from the Traffic Operations Division. Copies of the approved Traffic Control Devices Submittal Data Form shall be sent to the contractor and the Engineering Inspections Division.

6. Traffic Control Devices Plan:
6.1) All pavement markings shall be thermoplastic; raised pavement makers shall be class "B".
6.2) Pavement markings and raised pavement markers shall be installed on all roads classified other than residential with an ADT greater than 500 vehicles or if other conditions exist that require pavement markings, (see MUTCD section 3B-1).

7. Cost Estimate: An engineer's cost estimate shall be required for all proposed traffic control devices. The estimates shall be provided in conjunction with the Traffic Control Devices Submittal Data Form. (See Section 5.2)

8. Inspection and acceptance:
8.1) Upon completion of the installation of the traffic control devices, the contractor shall call the Engineering Inspections Division for an inspection at (813) 847-8154.
8.2) The inspection shall be made by the Engineering Inspections Division within 48 hours (two working days) of the request.
8.3) An inspection report shall be made by the Engineering Inspections Division. Copies of the report shall be sent to the Engineer and the Developer.
8.4) No roadway shall be open to the Public until all traffic control devices have been inspected and accepted by Pasco County.

WARNING
REMOVAL OF, OR DEFACING ANY TRAFFIC CONTROL DEVICE IS PUNISHABLE BY FINE AND/OR IMPRISONMENT REPORT DAMAGE BY CALLING (813) 847-2411
INSTALLED
J F M A M J J A S O N D
10's 20's 30's – 1 2 3 4 5 6 7 8 9
12 13 14 15 16 17 18 19

STUART M. ROGERS LICENSE NO. 42718 STATE OF FLORIDA PROFESSIONAL ENGINEER

12-2-2014

JOB NO.	EPN	DATE	DESIGNED	DRAWN	CHECKED	Q.C.
0597-0025	137	8-8-2014	JD	AH	SR	

REVISIONS

NO.	DATE	REVISIONS	APP'D BY
5	12-19-14	ADDED NOTE 9	
4	11-12-14	ADDED TYPE III BARRICADES.	
3	11-12-14	ADDED TYPICAL TYPE III BARRICADE DETAIL.	
2	11-12-14	ADDED GENERAL NOTES 7 AND 8.	
1	11-6-14	PASCO COUNTY COMMENTS	

DESIGNED FOR
EPPERSON RANCH, LLC
2502 NORTH ROCKY POINT DRIVE, SUITE 1050, TAMPA, FLORIDA 33607
PHONE: (813) 288-8078

PROJECT NAME
PARK PLACE ENTRANCE ROAD

SHEET NAME
HORIZONTAL CONTROL, STRIPING & SIGNAGE PLAN AND DETAILS

FLORIDA DESIGN CONSULTANTS, INC.
— THINK IT. ACHIEVE IT. —
707 N. FRANKLIN STREET, 6TH FLOOR, TAMPA, FLORIDA 34655
PHONE: (800) 532-1047 FAX: (727) 848-3648 WWW.FLDESIGN.COM C.A. NO. 7421

SHEET 5 OF 19

©Copyright 2014 Florida Design Consultants, Inc. Drawings and concepts may not be used or reproduced without written permission.

K:\137\PROJDATA\ConstDocs\PLANS\EPPERSON RANCH BLVD\137_HC-ERB.dwg - Dec 23, 2014 @ 3:43pm - ahulbert
K:\137\PROJDATA\ConstDocs\PLANS\EPPERSON RANCH BLVD\137_HC-ERB.dwg, Layout1, 12/23/2014 3:43:33 PM, ahulbert

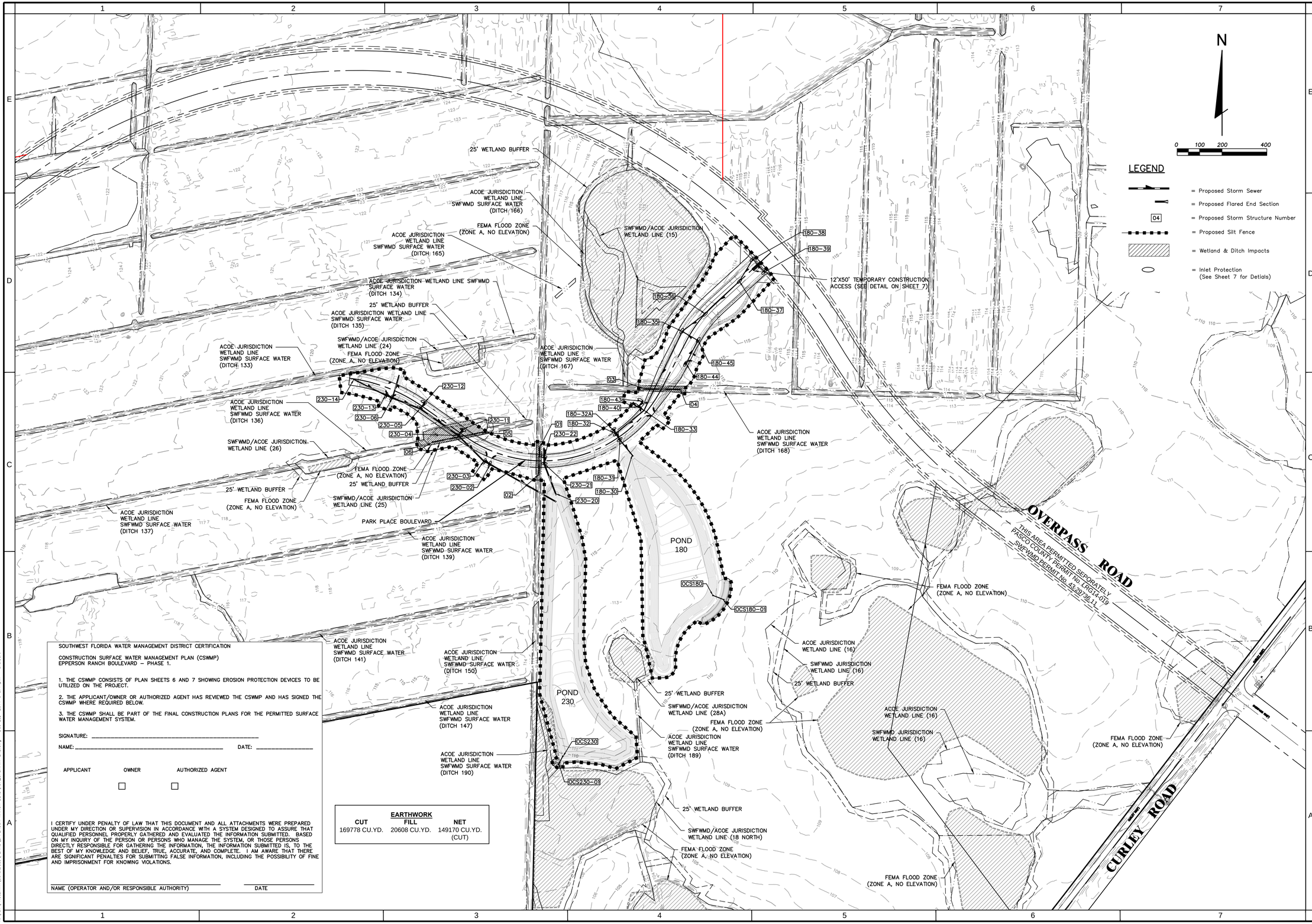

SOUTHWEST FLORIDA WATER MANAGEMENT DISTRICT CERTIFICATION

CONSTRUCTION SURFACE WATER MANAGEMENT PLAN (CSWMP)
EPPERSON RANCH BOULEVARD – PHASE 1.

1. THE CSWMP CONSISTS OF PLAN SHEETS 6 AND 7 SHOWING EROSION PROTECTION DEVICES TO BE UTILIZED ON THE PROJECT.

2. THE APPLICANT/OWNER OR AUTHORIZED AGENT HAS REVIEWED THE CSWMP AND HAS SIGNED THE CSWMP WHERE REQUIRED BELOW.

3. THE CSWMP SHALL BE PART OF THE FINAL CONSTRUCTION PLANS FOR THE PERMITTED SURFACE WATER MANAGEMENT SYSTEM.

SIGNATURE: _____

NAME: _____ DATE: _____

APPLICANT ☐ OWNER ☐ AUTHORIZED AGENT ☐

I CERTIFY UNDER PENALTY OF LAW THAT THIS DOCUMENT AND ALL ATTACHMENTS WERE PREPARED UNDER MY DIRECTION OR SUPERVISION IN ACCORDANCE WITH A SYSTEM DESIGNED TO ASSURE THAT QUALIFIED PERSONNEL PROPERLY GATHERED AND EVALUATED THE INFORMATION SUBMITTED. BASED ON MY INQUIRY OF THE PERSON OR PERSONS WHO MANAGE THE SYSTEM, OR THOSE PERSONS DIRECTLY RESPONSIBLE FOR GATHERING THE INFORMATION, THE INFORMATION SUBMITTED IS, TO THE BEST OF MY KNOWLEDGE AND BELIEF, TRUE, ACCURATE, AND COMPLETE. I AM AWARE THAT THERE ARE SIGNIFICANT PENALTIES FOR SUBMITTING FALSE INFORMATION, INCLUDING THE POSSIBILITY OF FINE AND IMPRISONMENT FOR KNOWING VIOLATIONS.

_____ _____
NAME (OPERATOR AND/OR RESPONSIBLE AUTHORITY) DATE

EARTHWORK

CUT	FILL	NET
169778 CU.YD.	20608 CU.YD.	149170 CU.YD. (CUT)

STUART M. ROGERS
LICENSE NO. 42718
STATE OF FLORIDA
PROFESSIONAL ENGINEER

12-2-2014

JOB NO.	SCALE	DATE	DESIGNED	DRAWN	CHECKED	QC
0597-0025	137	8-8-2014	JD	AH	SR	

NO.	DATE	REVISIONS	APP'D

DESIGNED FOR
EPPERSON RANCH, LLC
2502 NORTH ROCKY POINT DRIVE, SUITE 1050, TAMPA, FLORIDA 33607
PHONE: (813) 289-8078

PROJECT NAME
PARK PLACE ENTRANCE ROAD

SHEET NAME
OVERALL DRAINAGE AND STORM WATER POLLUTION PREVENTION PLAN

FLORIDA DESIGN CONSULTANTS, INC.
— THINK IT. ACHIEVE IT. —
707 N. FRANKLIN STREET, 6TH FLOOR, TAMPA, FLORIDA 34655
PHONE: (800) 532 - 1047 FAX: (727) 848 - 3648 WWW.FLDESIGN.COM C.A. NO. 7421

©Copyright 2014 Florida Design Consultants, Inc. Drawings and concepts may not be used or reproduced without written permission.

K:\137\PROJDATA\ConstDocs\PLANS\EPPERSON RANCH BLVD\137_OADRAIN-ERB.dwg, Layout1, 12/23/2014 3:44:19 PM, shulbert

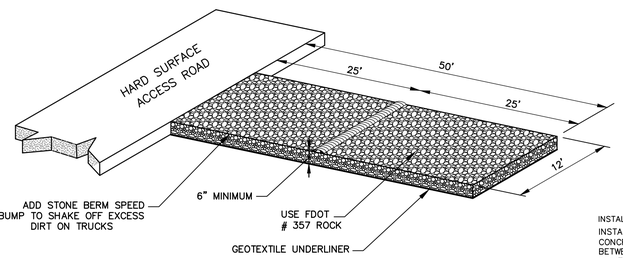

TEMPORARY CONSTRUCTION ACCESS

N.T.S.

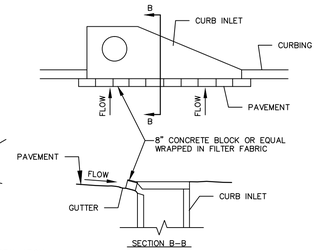

INSTALLATION:
INSTALL CURB INLET SEDIMENT BARRIER IMMEDIATELY AFTER PAVING. USE 8" CONCRETE BLOCK OR EQUAL WRAPPED IN FILTER FABRIC. PROVIDE A 4" GAP BETWEEN BARRIER AND INLET TO ALLOW OVERFLOW.
MAINTENANCE:
THE BARRIER SHALL BE INSPECTED DAILY AND AFTER EACH RAIN AND REPAIRS MADE AS NEEDED. SEDIMENT SHALL BE REMOVED WHEN THE SEDIMENT HAS ACCUMULATED TO ONE-HALF THE HEIGHT OF THE BARRIER. SEDIMENT SHALL NOT BE WASHED INTO THE INLET. IT SHALL BE REMOVED FROM THE SEDIMENT BARRIER AND DISPOSED OF AND STABILIZED SO THAT IT WILL NOT ENTER THE INLET, AGAIN.

CURB INLET SEDIMENT BARRIER

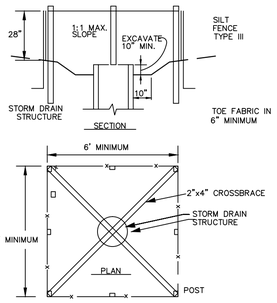

INSTALLATION:
TYPE III SILT FENCE SUPPORTED BY STEEL POST SHALL BE USED. THE STAKES SHALL BE SPACED EVENLY AROUND THE PERIMETER OF THE INLET A MAXIMUM OF 3 FEET APART, AND SECURELY DRIVEN INTO THE GROUND, APPROXIMATELY 18 INCHES DEEP. THE FABRIC SHALL BE ENTRENCHED 12 INCHES AND BACKFILLED WITH CRUSHED STONE OR COMPACTED SOIL. FABRIC AND WIRE SHALL BE SECURELY FASTENED TO THE POST, AND FABRIC ENDS MUST BE OVERLAPPED A MINIMUM OF 18 INCHES OR WRAPPED TOGETHER AROUND A POST TO PROVIDE A CONTINUOUS FABRIC BARRIER AROUND THE INLET.

MAINTENANCE:
THE BARRIER SHALL BE INSPECTED DAILY AND AFTER EACH RAIN AND REPAIRS MADE AS NEEDED. SEDIMENT SHALL BE REMOVED WHEN THE SEDIMENT HAS ACCUMULATED TO ONE-HALF THE HEIGHT OF THE BARRIER. SEDIMENT SHALL NOT BE WASHED INTO THE INLET. IT SHALL BE REMOVED FROM THE SEDIMENT BARRIER AND DISPOSED OF AND STABILIZED SO THAT IT WILL NOT ENTER THE INLET, AGAIN.

INLET SEDIMENT BARRIER FILTER FABRIC WITH SUPPORTING FRAME

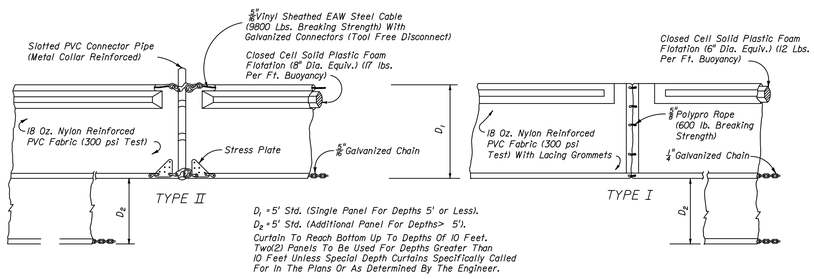

D_1 = 5' Std. (Single Panel For Depths 5' or Less).
D_2 = 5' Std. (Additional Panel For Depths > 5').
Curtain To Reach Bottom Up To Depths Of 10 Feet. Two(2) Panels To Be Used For Depths Greater Than 10 Feet Unless Special Depth Curtains Specifically Called For In The Plans Or As Determined By The Engineer.

NOTICE: COMPONENTS OF TYPES I AND II MAY BE SIMILAR OR IDENTICAL TO PROPRIETARY DESIGNS. ANY INFRINGEMENT ON THE PROPRIETARY RIGHTS OF THE DESIGNER SHALL BE THE SOLE RESPONSIBILITY OF THE USER. SUBSTITUTIONS FOR TYPES I AND II SHALL BE AS APPROVED BY THE ENGINEER.

FLOATING TURBIDITY BARRIERS

D.O.T. INDEX #103 N.T.S.

MAINTENANCE OF SILT SCREENS:
SILT SCREENS SHALL BE INSPECTED AFTER EACH RAINFALL EVENT FOR SIGNS OF DETERIORATION OR FAILURE. DETERIORATION OF A SILT SCREEN SHALL BE CONSTRUED TO MEAN THAT THE SILT SCREEN HAS LIMITED EFFECTIVENESS OR CAPACITY FOR THE FUNCTION OF TRAPPING SEDIMENT, DUE TO PROBLEMS SUCH AS, BUT NOT LIMITED TO, EXCESSIVE BUILDUP OF SEDIMENT OR CONSTRUCTION ACCIDENT. WHEN A SILT SCREEN BECOMES DETERIORATED, IT SHALL BE IMMEDIATELY REMEDIED AT THE DIRECTION OF THE ENGINEER BY SUCH MEANS AS REMOVAL OF THE EXCESSIVE BUILDUP OF SILT, STRAIGHTENING AND TIGHTENING OF THE SCREEN, OR ANY OTHER SUCH MEASURE DEEMED NECESSARY. FAILURE OF A SILT SCREEN SHALL BE CONSTRUED TO MEAN THAT THE SILT SCREEN IS NO LONGER CAPABLE OF FUNCTIONING TO TRAP SEDIMENT DUE TO A RIP, TEAR, OVERTOPPING BY SEDIMENT, BIODEGRADATION, CONSTRUCTION ACCIDENT, OR ANY OTHER SUCH MEANS. WHEN A SILT SCREEN IS DEEMED BY THE ENGINEER TO HAVE FAILED, IT SHALL BE IMMEDIATELY REPLACED WITH NEW SILT SCREEN WITHIN THE LIMITS DIRECTED BY THE ENGINEER. PREVENTATIVE MAINTENANCE OF THE SILT SCREEN SHALL BE ACCOMPLISHED BY WEEKLY INSPECTION FOR SIGNS OF DETERIORATION OR FAILURE DURING PERIODS OF NO RAINFALL EVENT.

MAINTENANCE OF HAY BALES:
HAY BALES SHALL BE INSPECTED AFTER EACH RAINFALL EVENT FOR SIGNS OF DETERIORATION OR FAILURE. DETERIORATION OF A HAY BALE SCREEN SHALL BE CONSTRUED TO MEAN THAT THE HAY BALE SCREEN HAS LIMITED EFFECTIVENESS OR CAPACITY FOR THE FUNCTION OF TRAPPING SEDIMENT, DUE TO PROBLEMS SUCH AS, BUT NOT LIMITED TO, EXCESSIVE BUILDUP OF SEDIMENT OR CONSTRUCTION ACCIDENT. WHEN A HAY BALE SCREEN BECOMES DETERIORATED, IT SHALL BE IMMEDIATELY REMEDIED AT THE DIRECTION OF THE ENGINEER BY SUCH MEANS AS REMOVAL OF THE EXCESSIVE BUILDUP OF SILT, STRAIGHTENING AND REALIGNING OF THE SCREEN, OR ANY OTHER SUCH MEASURE DEEMED NECESSARY. FAILURE OF A HAY BALE SCREEN SHALL BE CONSTRUED TO MEAN THAT THE HAY BALE SCREEN IS NO LONGER CAPABLE OF FUNCTIONING TO TRAP SEDIMENT DUE TO OVERTOPPING BY SEDIMENT, BIODEGRADATION, CONSTRUCTION ACCIDENT, OR ANY OTHER SUCH MEANS. WHEN A HAY BALE SCREEN IS DEEMED BY THE ENGINEER TO HAVE FAILED, IT SHALL BY IMMEDIATELY REPLACED WITH A NEW HAY BALE SCREEN WITHIN THE LIMITS DIRECTED BY THE ENGINEER. PREVENTATIVE MAINTENANCE OF THE HAY BALE SCREEN SHALL BE ACCOMPLISHED BY WEEKLY INSPECTION FOR SIGNS OF DETERIORATION OR FAILURE DURING PERIODS OF NO RAINFALL EVENT.

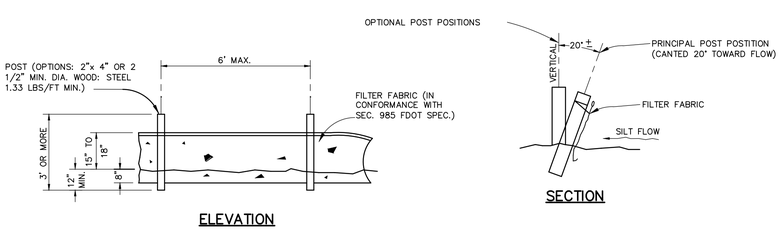

TYPE III SILT FENCE

D.O.T. INDEX #102 N.T.S.

SOUTHWEST FLORIDA WATER MANAGEMENT DISTRICT CERTIFICATION

CONSTRUCTION SURFACE WATER MANAGEMENT PLAN (CSWMP)
EPPERSON RANCH BOULEVARD – PHASE 1.

1. THE CSWMP CONSISTS OF PLAN SHEETS 7 AND 6 SHOWING EROSION PROTECTION DEVICES TO BE UTILIZED ON THE PROJECT.

2. THE APPLICANT/OWNER OR AUTHORIZED AGENT HAS REVIEWED THE CSWMP AND HAS SIGNED THE CSWMP WHERE REQUIRED BELOW.

3. THE CSWMP SHALL BE PART OF THE FINAL CONSTRUCTION PLANS FOR THE PERMITTED SURFACE WATER MANAGEMENT SYSTEM.

SIGNATURE: _____

NAME: _____ DATE: _____

APPLICANT	OWNER	AUTHORIZED AGENT
☐	☐	☐

I CERTIFY UNDER PENALTY OF LAW THAT THIS DOCUMENT AND ALL ATTACHMENTS WERE PREPARED UNDER MY DIRECTION OR SUPERVISION IN ACCORDANCE WITH A SYSTEM DESIGNED TO ASSURE THAT QUALIFIED PERSONNEL PROPERLY GATHERED AND EVALUATED THE INFORMATION SUBMITTED. BASED ON MY INQUIRY OF THE PERSON OR PERSONS WHO MANAGE THE SYSTEM, OR THOSE PERSONS DIRECTLY RESPONSIBLE FOR GATHERING THE INFORMATION, THE INFORMATION SUBMITTED IS, TO THE BEST OF MY KNOWLEDGE AND BELIEF, TRUE, ACCURATE, AND COMPLETE. I AM AWARE THAT THERE ARE SIGNIFICANT PENALTIES FOR SUBMITTING FALSE INFORMATION, INCLUDING THE POSSIBILITY OF FINE AND IMPRISONMENT FOR KNOWING VIOLATIONS.

_____ _____
NAME (OPERATOR AND/OR RESPONSIBLE AUTHORITY) DATE

NAME	TITLE	COMPANY NAME, ADDRESS AND PHONE NUMBER	DATE
*			

I CERTIFY UNDER PENALTY OF LAW THAT I UNDERSTAND, AND SHALL COMPLY WITH, THE TERMS AND CONDITIONS OF THE STATE OF FLORIDA GENERIC PERMIT FOR STORMWATER DISCHARGE FROM LARGE AND SMALL CONSTRUCTION ACTIVITIES AND THIS STORMWATER POLLUTION PREVENTION PLAN PREPARED THEREUNDER.

* NPDES CONTRACTOR AND SUBCONTRACTOR CERTIFICATION TO BE COMPLETED AFTER CONTRACTORS HAVE BEEN SELECTED.

1. SITE DESCRIPTION

A. PROJECT DESCRIPTION:

THE DEVELOPER / APPLICANT PROPOSES TO CONSTRUCT A NEW SUBDIVISION LOCATED IN PASCO COUNTY, FLORIDA. CONSTRUCTION WILL CONSIST OF CLEARING, GRUBBING, EARTHWORK, INSTALLATION OF THE INFRASTRUCTURE, BACK FILLING, PAVING AND GRADING.

B. MAJOR SOIL DISTURBING ACTIVITIES:

SOIL DISTURBING ACTIVITIES FOR THIS PROJECT WILL INCLUDE CLEARING, GRUBBING, EARTHWORK, INSTALLATION OF PAVING, DRAINAGE AND SANITARY STRUCTURES, WATER MAIN INSTALLATION BACK FILLING AND GRADING.

THE CONTRACTOR WILL BE RESPONSIBLE FOR PROVIDING TEMPORARY OR PERMANENT STABILIZATION AS SOON AS POSSIBLE FOR AREAS OF THE SITE WHERE CONSTRUCTION ACTIVITIES HAVE CEASED, BUT IN NO CASE SHALL THE TIME BE GREATER THAN FOURTEEN (14) CALENDAR DAYS.

C. TOTAL PROJECT AREA: 21.383± ACRES

THE PROJECT CONSISTS OF THE CONSTRUCTION OF APPROXIMATELY 140 RESIDENTIAL LOTS, ASPHALT PAVEMENT, CURB AND GUTTER, DRIVEWAY CONNECTIONS AND ACCESS ROADS, A CLOSED SANITARY SEWER SYSTEM, WATER MAINS FOR POTABLE WATER, AND FIRE PROTECTION AND A STORMWATER COLLECTION SYSTEM, AND CONVEYANCE PIPES TO THE SURFACE WATER MANAGEMENT SYSTEM LOCATED ONSITE.

D. TOTAL AREA TO BE DISTURBED: 19.513± ACRES

IT SHALL BE THE INTENT OF THE CONTRACTOR TO MINIMIZE THE ACREAGES OF DISTURBED SOIL IN THE PROJECT AREA AT ALL TIMES.

E. (1) RUNOFF COEFFICIENTS BEFORE CW(B), DURING CW(D) AND AFTER CW(A) CONSTRUCTION:

RUNOFF COEFFICIENT FOR:
OPEN SPACE: C = 0.20
IMPERVIOUS SURFACES: C = 0.95
DISTURBED AREAS, EXPOSED SOIL ETC. DURING CONST.: C = 0.40

WEIGHTED RUNOFF COEFFICIENT:
CW(B): 0.38
CW(D): 0.42
CW(A): 0.45

THE SITE CONSISTS OF NATURAL TREED AREAS.

2. CONTROLS
NARRATIVE – SEQUENCE OF SOIL DISTURBING ACTIVITIES AND IMPLEMENTATION OF CONTROLS:

CONSTRUCTION ACTIVITIES – GENERAL

CONSTRUCTION ACTIVITIES ON THIS PROJECT CONSIST OF CLEARING, GRUBBING, EARTHWORK, INSTALLATION OF THE INFRASTRUCTURE, BACK FILLING AND GRADING. ALL ITEMS REPRESENTED IN THE FOLLOWING DISCUSSION ARE TREATED IN DETAIL IN THE CONSTRUCTION DRAWINGS AND PROJECT SPECIFICATIONS, "FLORIDA DEPARTMENT OF TRANSPORTATION STANDARD SPECIFICATIONS FOR ROAD AND BRIDGE CONSTRUCTION", OR WILL BE IMPLEMENTED BY THE CONTRACTOR'S REPRESENTATIVE IN A MANNER APPROPRIATE TO ENVIRONMENTALLY SENSITIVE CONSTRUCTION PRACTICES AND AS APPROVED BY THE OWNER.

THE CONTRACTOR WILL BE REQUIRED TO PREPARE A SITE SPECIFIC EROSION CONTROL PLAN. THE CONTRACTOR WILL ALSO BE REQUIRED TO MODIFY THE PLAN OR MATERIALS DURING CONSTRUCTION TO ADAPT TO SEASONAL VARIATIONS.

OFF-SITE RUNOFF SHOULD BE DIVERTED AWAY OR THROUGH THE CONSTRUCTION AREA. THIS ADDITIONAL FLOW IF NOT DIVERTED, CAN ADD VOLUME AND SIZE TO STRUCTURAL PRACTICES, REQUIRING MORE FREQUENT MAINTENANCE AND LIMITING EFFECTIVENESS OF EROSION AND SEDIMENT CONTROLS.

COMPLIANCE WITH THE STORMWATER POLLUTION PREVENTION PLAN IS A REQUIREMENT OF THE PROJECT CONTRACT DOCUMENTS. CONSTRUCTION-RELATED INFORMATION REQUIRED BY THE NPDES PERMIT BUT NOT SPECIFICALLY INDICATED IN THE STORMWATER POLLUTION PREVENTION PLAN CAN BE FOUND IN THE CONTRACT DOCUMENTS.

THE CONTRACTOR WILL BE RESPONSIBLE FOR PROVIDING A STABILIZED CONSTRUCTION ENTRANCE FOR VEHICLES ENTERING OR EXITING ONTO PUBLIC ROADS. THE CONTRACTOR'S REPRESENTATIVE SHALL BE RESPONSIBLE FOR MONITORING THE SYSTEM AND MODIFYING THE SYSTEM OR PROCEDURES AS NEEDED.

CONSTRUCTION ACTIVITIES

PRIOR TO COMMENCEMENT, THE CONTRACTOR SHALL PROVIDE A DETAILED CONSTRUCTION SCHEDULE TO INDICATE DATES OF MAJOR GRADING ACTIVITIES AND DETERMINE SEQUENCING OF TEMPORARY AND PERMANENT SOIL DISTURBING ACTIVITIES ON ALL PORTIONS OF THE SITE.

PRIOR TO THE BEGINNING OF ANY PHASE, THE CONTRACTOR SHALL INSTALL EROSION AND SEDIMENT CONTROL ITEMS AS DESCRIBED IN THE CONSTRUCTION DRAWINGS.

THE CONTRACTOR IS RESPONSIBLE FOR PROVIDING SEEDING, MULCHING AND WATER AS SOON AS POSSIBLE FOR AREAS OF THE SITE WHERE CONSTRUCTION HAS TEMPORARILY CEASED BUT IN NO CASE SHALL THE TIME BE GREATER THAN FOURTEEN (14) DAYS.

INSTALLATION OF THE INFRASTRUCTURE AND EARTHWORK, AS SHOWN ON THE PLANS MAY REQUIRE DEWATERING PRIOR TO CONSTRUCTION. THE CONTRACTOR SHALL BE RESPONSIBLE FOR DISCHARGING THE DEWATERING FLOW TO A TEMPORARY SETTLINGS BASIN SUCH AS AREAS CREATED BY STAKED HAY BALES IN DRY GRASSED SWALES OR OTHER SIMILAR SETTLING AREAS, HOWEVER, AT NO TIME SHALL THE CONTRACTOR DISCHARGE DEWATERING FLOW DIRECTLY TO WETLAND AREAS.

EROSION AND SEDIMENT CONTROLS SHALL BE MAINTAINED THROUGHOUT CONSTRUCTION AND MAY BE REMOVED ONLY WHEN PERMANENT STABILIZATION IS ESTABLISHED AND THE OWNER APPROVES THE REMOVAL.

A. EROSION AND SEDIMENT CONTROLS:

(1) STABILIZATION PRACTICES TO BE IMPLEMENTED:

STABILIZATION MEASURES SHALL BE INITIATED AS SOON AS PRACTICABLE IN PORTIONS OF THE SITE WHERE CONSTRUCTION ACTIVITIES HAVE TEMPORARILY OR PERMANENTLY CEASED, BUT IN NO CASE SHALL THE TIME BE GREATER THAN FOURTEEN (14) DAYS AFTER THE CONSTRUCTION ACTIVITY HAS TEMPORARILY OR PERMANENTLY CEASED. ALL DISTURBED AREAS WILL BE SEEDED AND MULCHED OR SODDED FOLLOWING CONSTRUCTION.

(2) STRUCTURAL PRACTICES WILL INCLUDE:

ROCK BEDDING AT CONSTRUCTION EXIT
STAKED SILT FENCES

B. OTHER CONTROLS:

(1) WASTE DISPOSAL:

THE CONTRACTOR WILL PROVIDE LITTER CONTROL AND COLLECTION WITHIN THE PROJECT BOUNDARIES DURING CONSTRUCTION ACTIVITIES. ALL FERTILIZER, HYDROCARBON, OR OTHER CHEMICAL CONTAINERS SHALL BE DISPOSED OF BY THE CONTRACTOR ACCORDING TO EPA'S STANDARD PRACTICES AS DETAILED BY THE MANUFACTURER. NO SOLID MATERIALS INCLUDING BUILDING AND CONSTRUCTION MATERIALS SHALL BE DISCHARGED TO WETLANDS OR BURIED ON-SITE.

(2) OFF-SITE VEHICLE TRACKING:

OFF-SITE VEHICLE TRACKING WILL BE CONTROLLED BY THE FOLLOWING METHODS:

LOADED HAUL TRUCKS TO BE COVERED WITH TARPAULIN.
EXCESS DIRT ON ROAD REMOVED DAILY.
STABILIZED CONSTRUCTION ENTRANCE.

THE CONTRACTOR SHALL BE RESPONSIBLE FOR CONSTRUCTING AND MAINTAINING STABILIZED CONSTRUCTION ENTRANCES WHEN ENTERING OR EXITING ONTO PUBLIC ROAD. THE CONTRACTOR'S REPRESENTATIVE SHALL BE RESPONSIBLE FOR MODIFYING THE SYSTEM OR PROCEDURES AS NEEDED AND AS APPROVED BY THE OWNER.

(3) SANITARY WASTE:

ALL SANITARY WASTE WILL BE COLLECTED FROM PORTABLE UNITS BY A LICENSED SANITARY WASTE MANAGEMENT CONTRACTOR AS REQUIRED BY STATE REGULATION.

(4) FERTILIZERS AND PESTICIDES:

FERTILIZERS AND SOIL STERILIZERS WILL BE USED ON THIS PROJECT IN ACCORDANCE WITH THE PROJECT SPECIFICATIONS AT THE DISCRETION OF THE CONTRACTOR WITH COORDINATION OF THE OWNER.

(5) NON-STORMWATER DISCHARGE (INCLUDING SPILL REPORTING):

A. THE CONTRACTOR WILL PROVIDE THE DEVELOPER / APPLICANT WITH AN EROSION CONTROL PLAN THAT WILL INCLUDE SPILL REPORTING AND RESPONSE.

B. APPROVED STATE, LOCAL PLANS, OR STORMWATER PERMITS:
SEE ATTACHED PERMITS.

(6) STORAGE, APPLICATION, GENERATION, AND MITIGATION OF TOXIC SUBSTANCES:

(A) ALL TOXIC SUBSTANCES ARE TO BE STORED, APPLIED, GENERATED, OR MITIGATED IN ACCORDANCE WITH THE CRITERIA OF THE APPROPRIATE REGULATORY AGENCIES.

3. MAINTENANCE:

GENERAL

THE CONTRACTOR WILL BE RESPONSIBLE FOR MAINTENANCE AND REPAIRS OF EROSION AND SEDIMENT CONTROL DEVICES AND REMOVAL OF EROSION AND SEDIMENT CONTROL DEVICES AFTER THE NOTICE OF TERMINATION.

MAINTENANCE AND REPAIR REQUIRED FOR THE CONTROL AND ABATEMENT OF EROSION AND WATER POLLUTION SHALL BE INCLUDED IN THE COST OF PAY ITEMS FOR THIS PROJECT.

THE CONTRACTOR SHALL MAINTAIN RAIN GAUGES ON THE PROJECT SITE AND RECORD WEEKLY RAINFALL. ALL CONTROL MEASURES WILL BE MAINTAINED DAILY BY THE CONTRACTOR.

ALL MEASURES WILL BE MAINTAINED IN GOOD WORKING ORDER. IF A REPAIR IS NECESSARY, IT WILL BE INITIATED WITHIN 24 HOURS OF REPORT.

STRUCTURAL PRACTICES AND CONTROLS:

THE FOLLOWING PRACTICES WILL BE USED TO MAINTAIN EROSION AND SEDIMENT CONTROLS:

BUILT-UP SEDIMENT WILL BE REMOVED FROM SILT FENCE WHEN IT HAS REACHED ONE-THIRD THE HEIGHT OF THE FENCE.

TEMPORARY AND PERMANENT SEEDING AND PLANTING WILL BE INSPECTED FOR BARE SPOTS, WASHOUTS, AND HEALTHY GROWTH.

STABILIZED CONSTRUCTION ENTRANCES SHALL BE MAINTAINED TO PREVENT CLOGGING OF ROCK BEDDING WHICH MAY IMPEDE THE USEFULNESS OF THE STRUCTURE.

4. INSPECTION:

THE CONTRACTOR'S DAILY INSPECTIONS REQUIRED FOR THE CONTROL AND ABATEMENT OF EROSION AND WATER POLLUTION SHALL BE INCLUDED IN THE COST OF THE PAY ITEMS FOR THIS PROJECT.

ALL EROSION AND WATER POLLUTION ABATEMENT AND CONTROL MEASURES WILL BE INSPECTED DAILY BY THE CONTRACTOR.

THE CONTRACTOR SHALL USE THE CONSTRUCTION INSPECTION REPORT FORM (SEE ATTACHED) FOR DAILY INSPECTIONS.

5. TRACKING AND REPORTING:

REQUIRED INSPECTIONS MUST OCCUR AT LEAST ONCE PER WEEK AND WITHIN 24 HOURS OF THE END OF A STORM EVENT THAT IS 0.50 INCHES OR GREATER. AN INSPECTION REPORTING FORM HAS BEEN PROVIDED TO THE OWNER/DEVELOPER.

THE CONTRACTOR SHALL SUBMIT A WEEKLY REPORT TO THE DEVELOPER / APPLICANT DOCUMENTING THE DAILY INSPECTIONS AND MAINTENANCE OR REPAIRS TO THE EROSION AND SEDIMENT CONTROL DEVICES.

THE DEVELOPER / APPLICANT OR ITS REPRESENTATIVES SHALL MAINTAIN ALL REQUIRED RECORDS SUBMITTED BY THE CONTRACTOR AND COMPLETE ALL SWPPP INSPECTION REPORT FORMS REQUIRED FOR THE NPDES PERMIT.

PREPARATION OF THE CONTRACTOR'S WEEKLY REPORTS OF INSPECTIONS, MAINTENANCE AND REPAIRS, REQUIRED FOR THE CONTROL AND ABATEMENT OF EROSION AND WATER POLLUTION, SHALL BE INCLUDED IN THE COST OF THE PAY ITEMS FOR THIS PROJECT.

STUART M. ROGERS
LICENSE NO. 42718
STATE OF FLORIDA
PROFESSIONAL ENGINEER
12-2-2014

JOB NO.	SCALE	DATE	DESIGNED	DRAWN	CHECKED	QC
0597-0025	137	8-8-2014	JD	AH	SR	

NO.	DATE	REVISIONS	APP'D

DESIGNED FOR
EPPERSON RANCH, LLC
25502 NORTH ROCKY POINT DRIVE, SUITE 1050, TAMPA, FLORIDA 33607
PHONE: (813) 289-8078

PROJECT NAME
PARK PLACE ENTRANCE ROAD

SHEET NAME
OVERALL DRAINAGE AND STORM WATER POLLUTION PREVENTION PLAN

FLORIDA DESIGN CONSULTANTS, INC.
THINK IT. ACHIEVE IT.
707 N. FRANKLIN STREET, 6TH FLOOR, TAMPA, FLORIDA 34655
PHONE: (800) 532 - 1047 FAX: (727) 848 - 3648 WWW.FLDESIGN.COM C.A. NO. 7421

© Copyright 2014 Florida Design Consultants, Inc. Drawings and concepts may not be used or reproduced without written permission.

K:\137\PROJDATA\ConstDocs\PLANS\EPPERSON RANCH BLVD\137_OADRAIN-2-ERB.dwg - Layout1, 12/23/2014 3:44:31 PM, shulbert

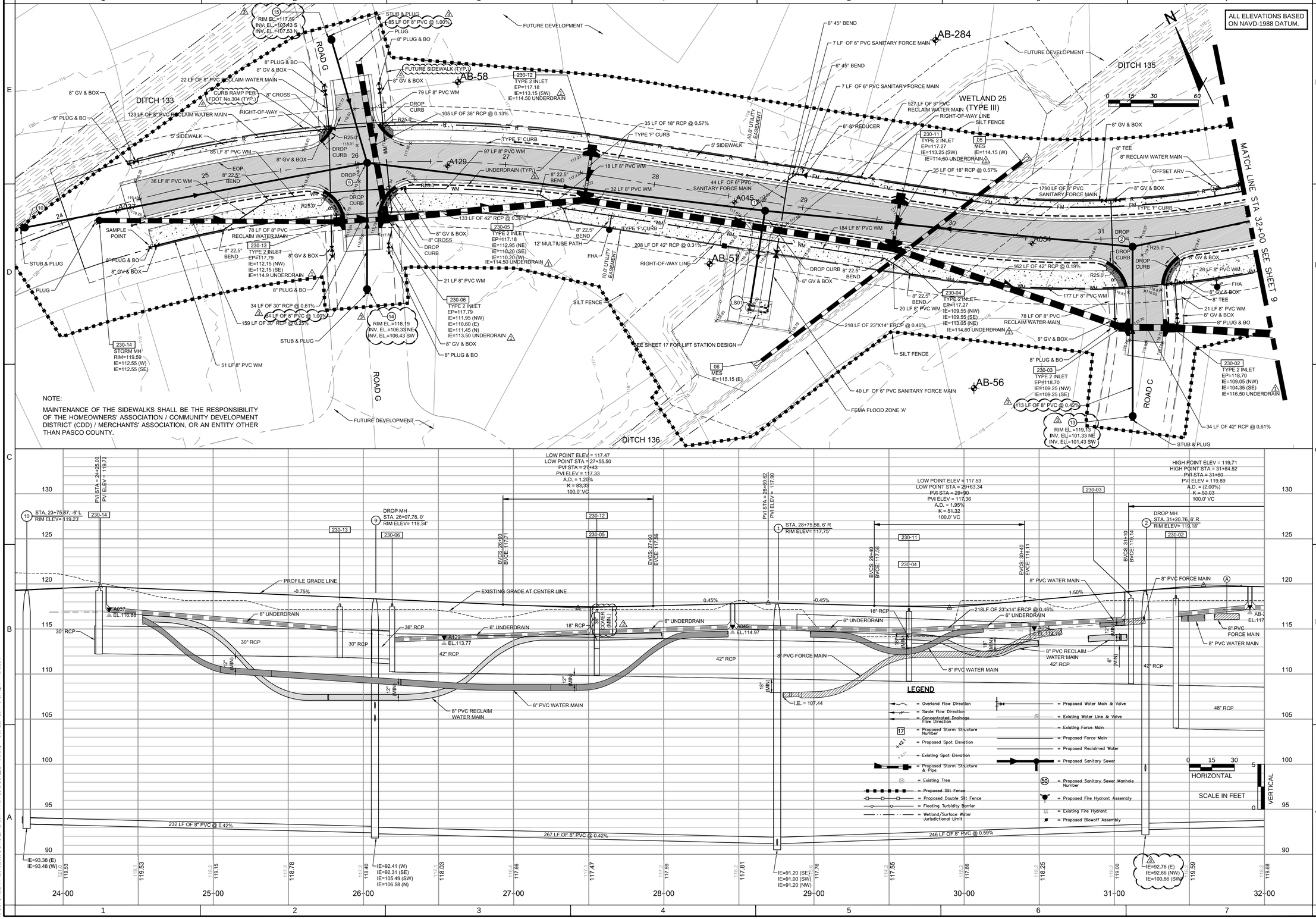

STUART M. ROGERS LICENSE NO. 42718 STATE OF FLORIDA PROFESSIONAL ENGINEER

12-2-2014

JOB NO.	SCALE	DATE	DESIGNED	DRAWN	REVIEWED	QC
0597-0025	137	8-8-2014	JD	AH	SR	

NO.	DATE	REVISIONS	BY
1	12-23-14	ADDED CURB RAMP CALLOUT	
2	12-12-14	REVISED SANITARY SEWER	
3	11-18-14	ADDED 08" MIN. TYP. NOTE PER PCU COMMENT	
4	11-6-14	PASCO COUNTY COMMENTS	

DESIGNED FOR
EPPERSON RANCH, LLC
2502 NORTH ROCKY POINT DRIVE, SUITE 1050, TAMPA, FLORIDA 33607
PHONE: (813) 289-8078

PROJECT NAME
PARK PLACE ENTRANCE ROAD

SHEET NAME
PLAN AND PROFILE

FLORIDA DESIGN CONSULTANTS, INC.
— THINK IT. ACHIEVE IT. —
707 N. FRANKLIN STREET, 6TH FLOOR, TAMPA, FLORIDA 34655
PHONE: (800) 532 - 1047 FAX: (727) 848 - 3648 WWW.FLDESIGN.COM C.A. NO. 7421

SHEET 8 OF 19

© Copyright 2014 Florida Design Consultants, Inc. Drawings and concepts may not be used or reproduced without written permission.

K:\137\PROJDATA\Cons\Docs\PLANS\EPPERSON RANCH BLVD\137_PLPR-E6B.dwg, LayoutL 12/23/2014 3:45:23 PM, ahulbert

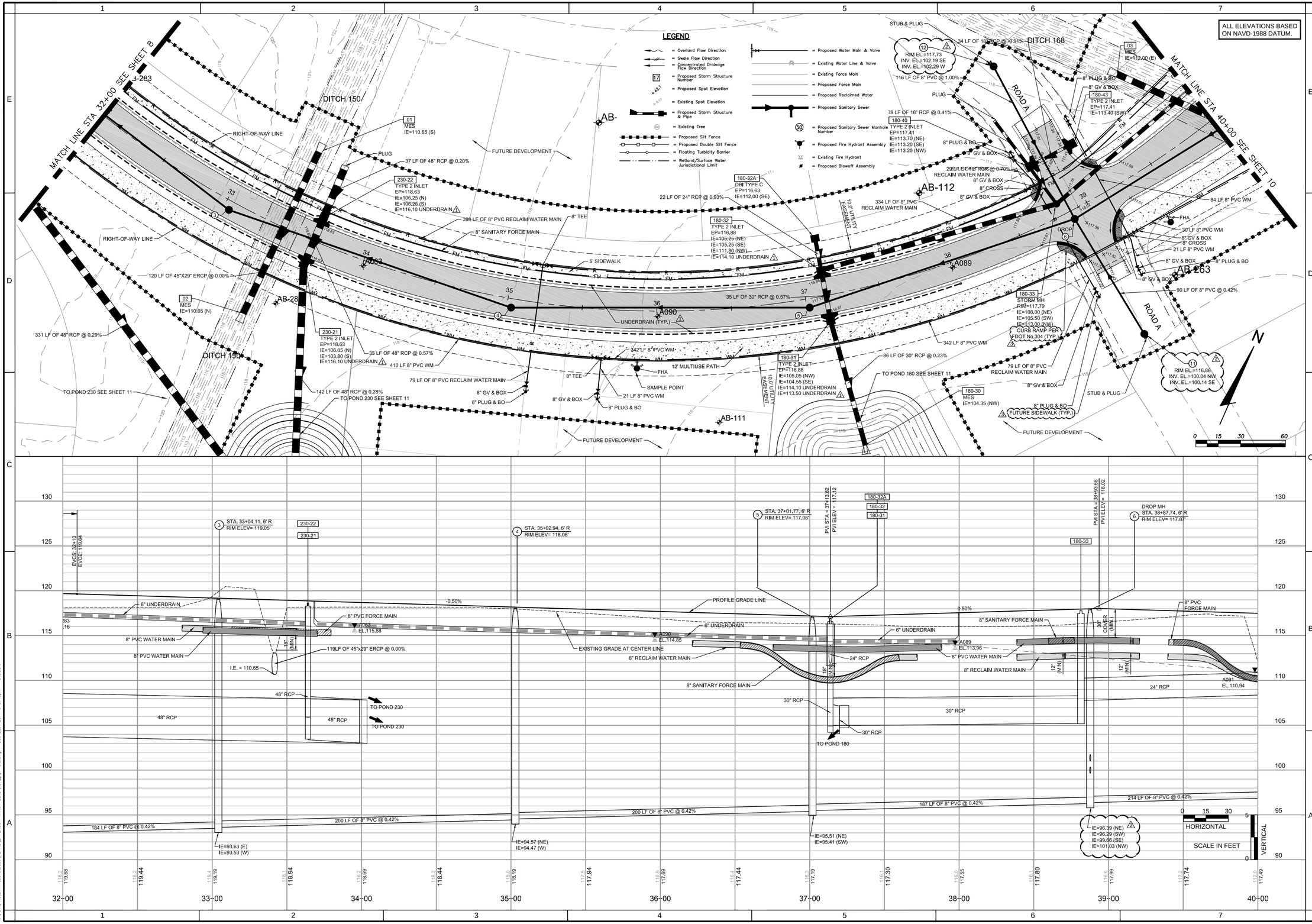

STUART M. ROGERS LICENSE NO. 42718 STATE OF FLORIDA PROFESSIONAL ENGINEER

12-2-2014

JOB NO.	DATE	DESIGNED	DRAWN	CHECKED
0597-0025	137	8-8-2014	JD	AH / SR

NO.	DATE	REVISIONS	BY
3	12-23-14	ADDED CURB RAMP & FUTURE SIDEWALK	
		CALL-OUT	
2	12-12-14	REVISED SANITARY SEWER	
1	11-6-14	PASCO COUNTY COMMENTS	

DESIGNED FOR

EPPERSON RANCH, LLC
2502 NORTH ROCKY POINT DRIVE, SUITE 1050, TAMPA, FLORIDA 33607
PHONE: (813) 289-8078

PROJECT NAME

PARK PLACE ENTRANCE ROAD

SHEET NAME

PLAN AND PROFILE

FLORIDA DESIGN CONSULTANTS, INC.
THINK IT. ACHIEVE IT.
707 N. FRANKLIN STREET, 6TH FLOOR, TAMPA, FLORIDA 34655
PHONE: (800) 532 - 1047 FAX: (727) 848 - 3648 WWW.FLDESIGN.COM C.A. NO. 7421

© Copyright 2014 Florida Design Consultants, Inc. Drawings and concepts may not be used or reproduced without written permission.

K:\137\PROJDATA\Civil\Docs\PLANS\EPPERSON RANCH BLVD\137_PLPR-EIB.dwg, Layout1 (2), 12/22/2014 3:45:55 PM, ahulbert

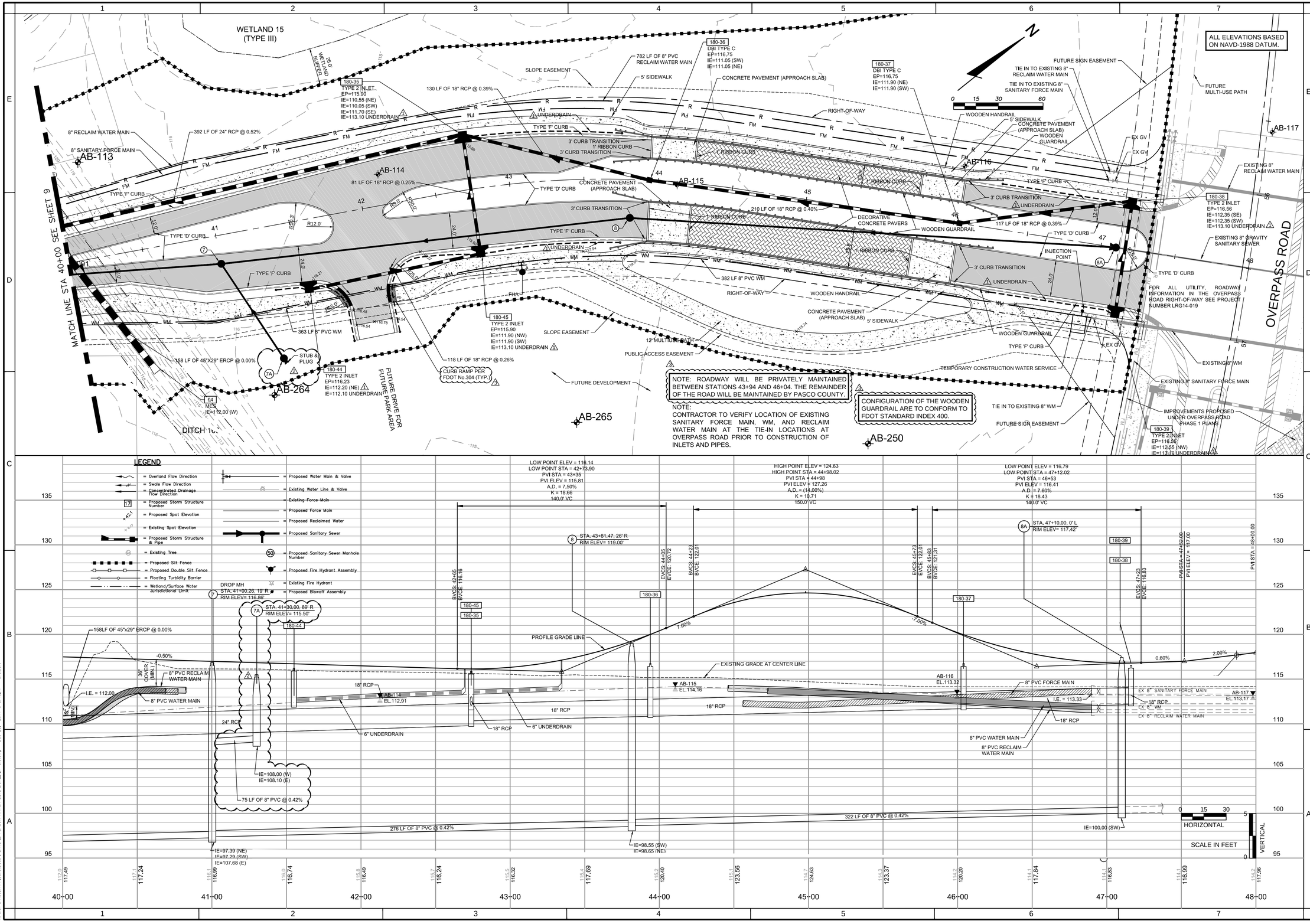

STUART M. ROGERS
LICENSE NO. 42718
STATE OF FLORIDA
PROFESSIONAL ENGINEER
12-2-2014

JOB NO.	EPN.	DATE	DESIGNED	DRAWN	CHECKED	APP'D BY
0597-0025	137	8-8-2014	JD	AH	SR	

NO.	DATE	REVISIONS
3	12-23-2014	ADDED NOTES
2	12-12-2014	ADDED MH 7A AND STUB & PLUG
1	11-6-14	PASCO COUNTY COMMENTS

DESIGNED FOR
EPPERSON RANCH, LLC
2502 NORTH ROCKY POINT DRIVE, SUITE 1050, TAMPA, FLORIDA 33607
PHONE: (813) 288-8078

PROJECT NAME
PARK PLACE ENTRANCE ROAD

SHEET NAME
PLAN AND PROFILE

FLORIDA DESIGN CONSULTANTS, INC.
THINK IT. ACHIEVE IT.
707 N. FRANKLIN STREET, 6TH FLOOR, TAMPA, FLORIDA 34655
PHONE: (800) 532 - 1047 FAX: (727) 848 - 3648 WWW.FLDESIGN.COM C.A. NO. 7421

SHEET 10 OF 19

© Copyright 2014 Florida Design Consultants, Inc. Drawings and concepts may not be used or reproduced without written permission.

K:\137\PROJDATA\CONSTDOCS\PLANS\EPPERSON RANCH BLVD\137_XSEC-ERB.dwg - Dec 23, 2014 @ 3:46pm - ahulbert

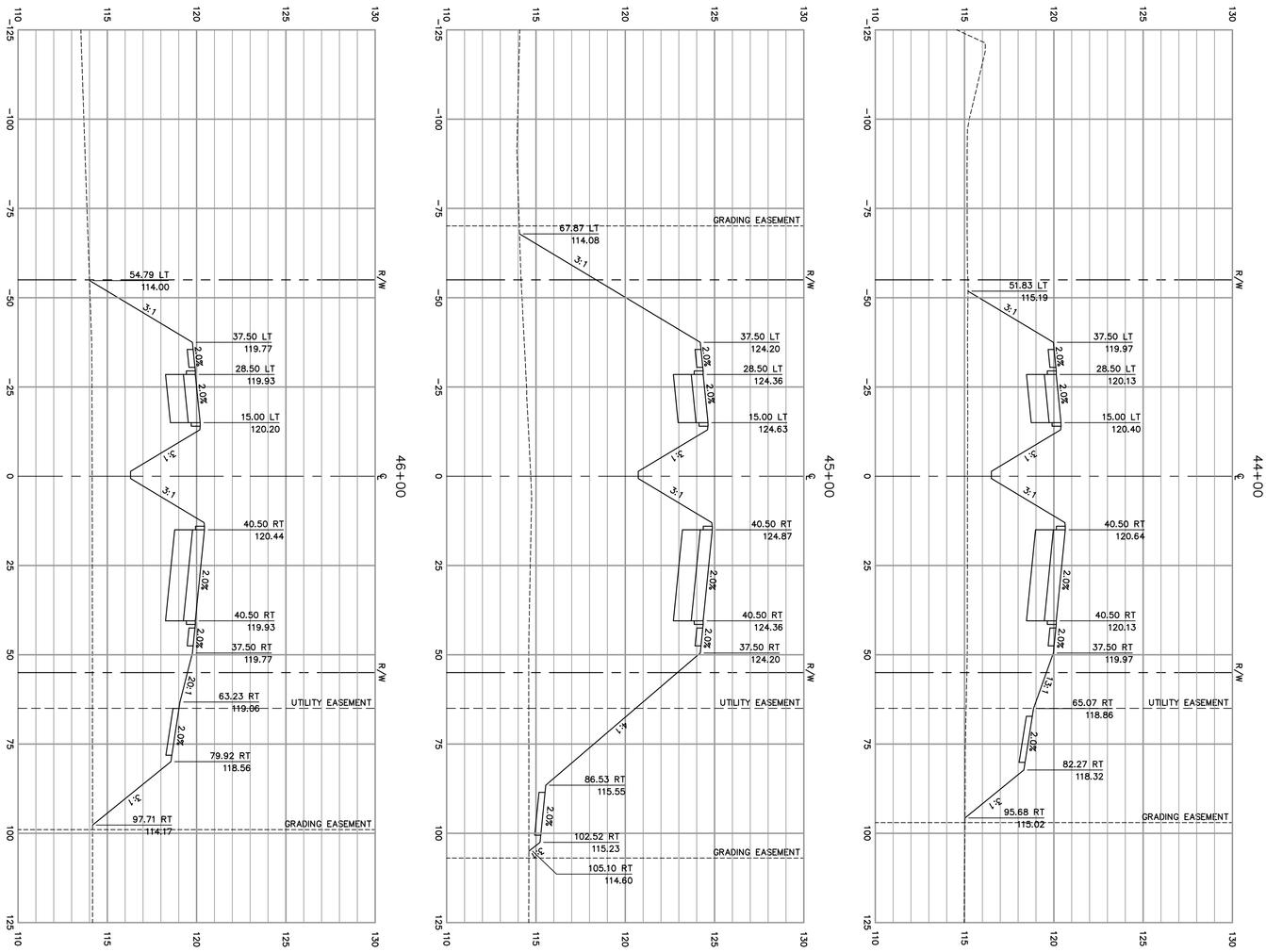

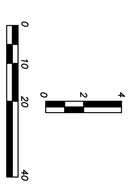

FLORIDA DESIGN CONSULTANTS, INC.
THINK IT. ACHIEVE IT.
3030 STARKEY BOULEVARD, NEW PORT RICHEY, FLORIDA 34655
PHONE: (800) 532 - 1047 FAX: (727) 848 - 3648 WWW.FLDESIGN.COM C.A. NO. 7421

DESIGNED FOR
EPPERSON RANCH, LLC
2502 NORTH ROCKY POINT DRIVE, SUITE 1050, TAMPA, FLORIDA 33607
PHONE: (813) 288-8078

PROJECT NAME
PARK PLACE ENTRANCE ROAD

SHEET NAME
CROSS SECTIONS

NO.	DATE	REVISIONS	APP'D BY

JOB NO. 0597-0025
EPN 137
DATE 8-8-2014
DESIGNED JD DRAWN AH
CHECKED SR Q.C.

STUART M. ROGERS
LICENSE NO. 42718
STATE OF FLORIDA
PROFESSIONAL ENGINEER
12-2-2014

SHEET 10A OF 19

©Copyright 2014 Florida Design Consultants, Inc. Drawings and concepts may not be used or reproduced without written permission.

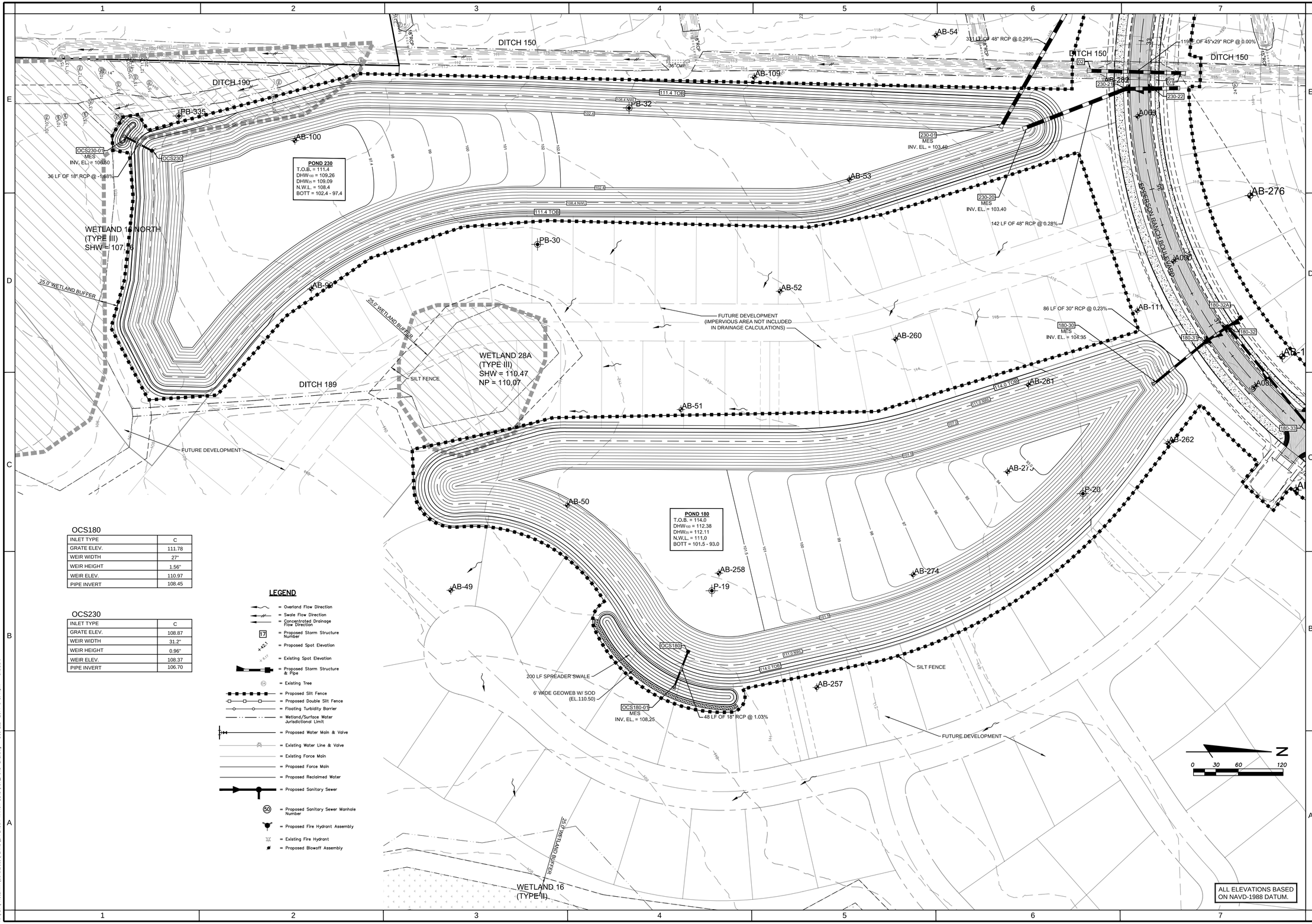

OCS180

INLET TYPE	C
GRATE ELEV.	111.78
WEIR WIDTH	27"
WEIR HEIGHT	1.56"
WEIR ELEV.	110.97
PIPE INVERT	108.45

OCS230

INLET TYPE	C
GRATE ELEV.	108.87
WEIR WIDTH	31.2"
WEIR HEIGHT	0.96"
WEIR ELEV.	108.37
PIPE INVERT	106.70

LEGEND

- = Overland Flow Direction
- = Swale Flow Direction
- = Concentrated Drainage Flow Direction
- 17 = Proposed Storm Structure Number
- 42.1 = Proposed Spot Elevation
- 42.1 = Existing Spot Elevation
- = Proposed Storm Structure & Pipe
- = Existing Tree
- = Proposed Silt Fence
- = Proposed Double Silt Fence
- = Floating Turbidity Barrier
- = Wetland/Surface Water Jurisdictional Limit
- = Proposed Water Main & Valve
- = Existing Water Line & Valve
- = Existing Force Main
- = Proposed Force Main
- = Proposed Reclaimed Water
- = Proposed Sanitary Sewer
- 50 = Proposed Sanitary Sewer Manhole Number
- = Proposed Fire Hydrant Assembly
- = Existing Fire Hydrant
- = Proposed Blowoff Assembly

STUART M. ROGERS
LICENSE NO. 42718
STATE OF FLORIDA
PROFESSIONAL ENGINEER

12-2-2014

JOB NO.	0597-0025
SHT.	137
DATE	8-8-2014
DESIGNED	JD
DRAWN	AH
REVIEWED	SR

NO.	DATE	REVISIONS
1	11-6-14	PASCO COUNTY COMMENTS

DESIGNED FOR
EPPERSON RANCH, LLC
2502 NORTH ROCKY POINT DRIVE, SUITE 1050, TAMPA, FLORIDA 33607
PHONE: (813) 289-8078

PROJECT NAME
PARK PLACE ENTRANCE ROAD

SHEET NAME
POND DETAIL SHEET

FLORIDA DESIGN CONSULTANTS, INC.
THINK IT. ACHIEVE IT.
707 N. FRANKLIN STREET, 6TH FLOOR, TAMPA, FLORIDA 33602
PHONE: (800) 532 - 1047 FAX: (727) 848 - 3648 WWW.FLDESIGN.COM C.A. NO. 7421

© Copyright 2014 Florida Design Consultants, Inc. Drawings and concepts may not be used or reproduced without written permission.

K:\137\PROJDATA\ConstDocs\PLANS\EPPERSON RANCH BLVD\137_POND-ERB.dwg - Layout1 (4), 12/23/2014 3:47:31 PM, ahulbert

CURB INLET TYPES 5 & 6

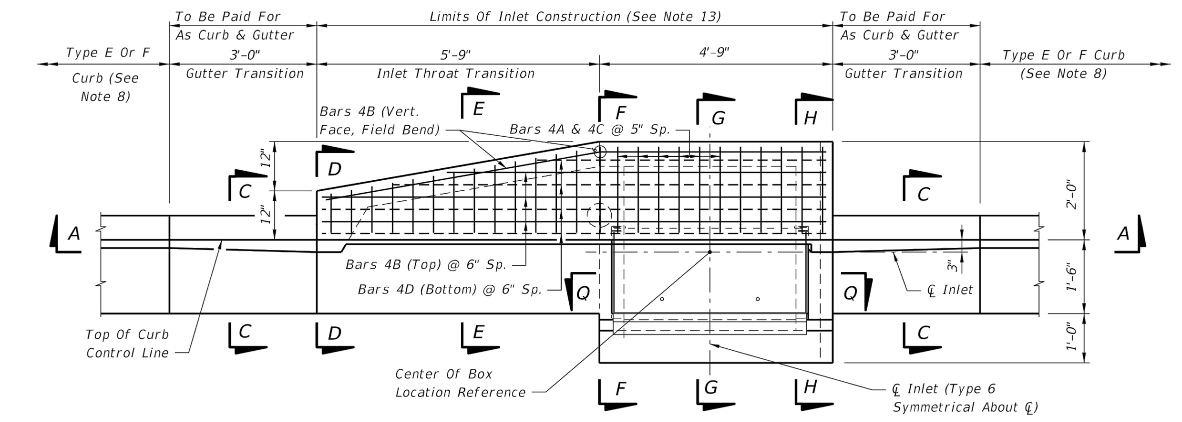

TOP VIEW

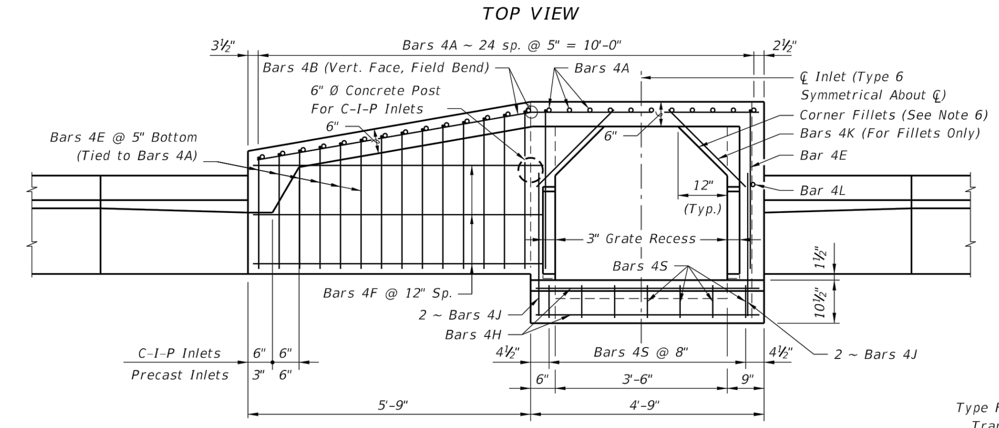

SECTION BB

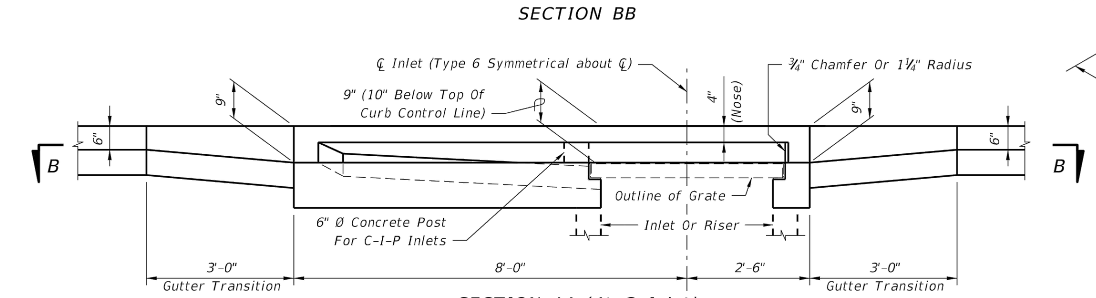

SECTION AA (At ℄ Inlet)

INLET TYPE 5 (Curb Inlet Type 6 Symmetrical With Left Half)

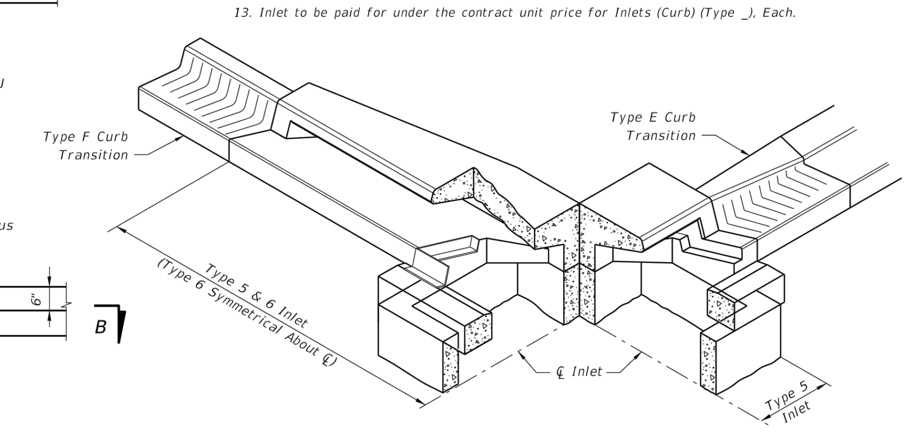

SKETCH SHOWING FRAME SEAT AND THROAT RECESS

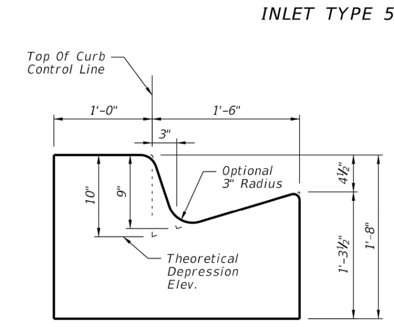

SECTION DD
(End View Of Inlet)

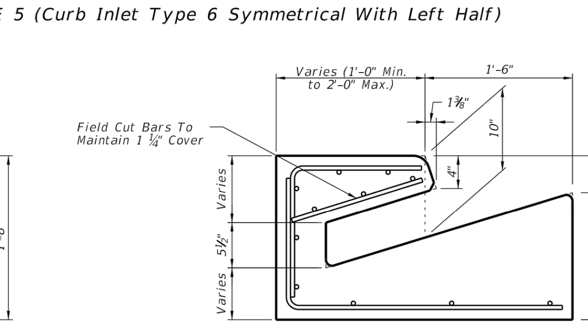

SECTION EE

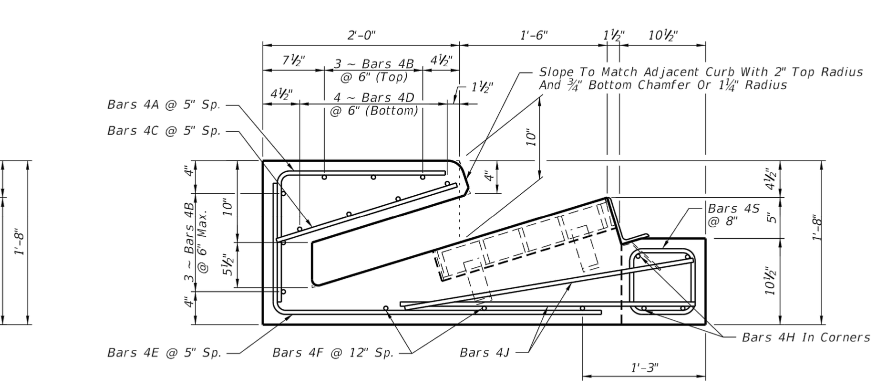

SECTION FF

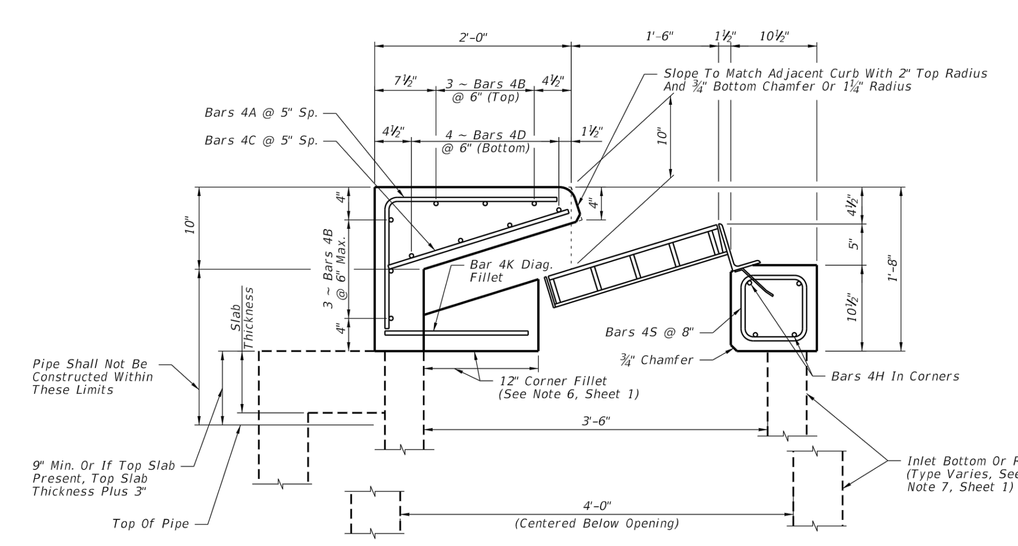

SECTION GG

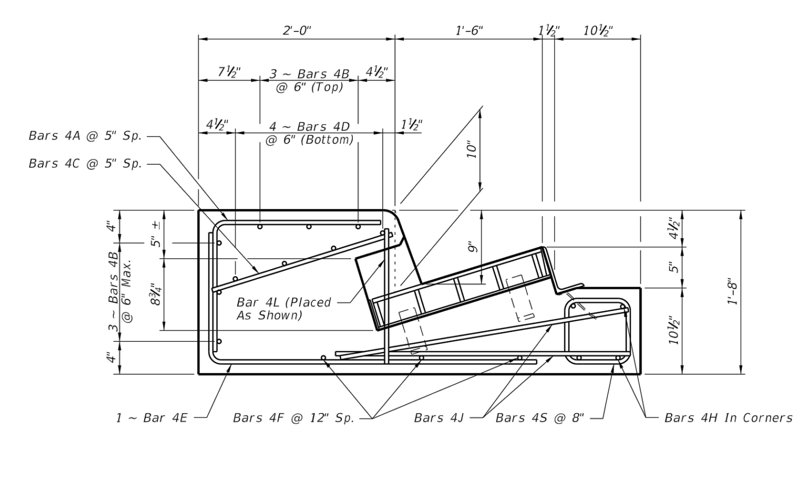

SECTION HH
(Type 5 Inlet Only)

GENERAL NOTES

1. The finished grade and slope of the inlet tops are to conform with the finished cross slope and grade of the proposed sidewalk and/or border.
2. For inlets constructed on a curve, refer to the plans to determine the radius, and modify the inlet details accordingly. Bend steel when necessary.
3. All reinforcing steel to be Grade 60 bars with 1¼" minimum cover unless otherwise shown, see Sheet 4 for equivalent area Welded Wire Reinforcement details.
4. Inlet tops shall be either cast-in-place or precast concrete. Precast units shall conform to the dimensions shown or in accordance with approved shop drawing's. Request for shop drawing approval shall be directed to the State Drainage Engineer.
5. Concrete meeting the requirements of ASTM C478 (4,000 psi) may be used in lieu of Class II concrete for precast units, manufactured in plants which meet the requirements of Section 449 of the Specifications.
6. Corner fillets are required at inlet opening for precast units or C-I-P units used in conjunction with circular inlet bottoms or skewed rectangular inlet boxes. Finish top of fillets flush with drain throat bottom and match slope.
7. For inlet bottoms see Index No. 200. Inlet tops are to be used with Type P bottoms, or Type J bottoms with 3'-6" square (Type B), 3'-6" or 4' round (Type A) risers or top slab openings.
8. These inlet tops are designed for use with standard curb and gutter Type E and Type F. Locate inlet outside of pedestrian crosswalks. For Type E curb, transition the shape of the curb over the gutter transition length to match the face of the inlet (Type F).
9. See Index No. 201 for supplemental details.
10. All steel used for frame and grate shall meet the requirements of ASTM A36/A36M.
11. Either cast iron grates or steel grates may be used.
12. When Alternate "G" grate is specified in the plans either the cast iron grate and galvanized steel frame or the the galvanized steel grate and frame must be used. Grates are to be grouted in accordance with the grouting detail shown on Sheet 5, in lieu of tack welding.
13. Inlet to be paid for under the contract unit price for Inlets (Curb) (Type _), Each.

CROSS REFRENCES:
For General Notes See Sheet 1.
For Location Of Sections DD Thru HH See Sheet 1.

PRECAST DETAILS

CURB INLET TYPES 5 & 6
FDOT INDEX 211

DITCH BOTTOM INLET D & C

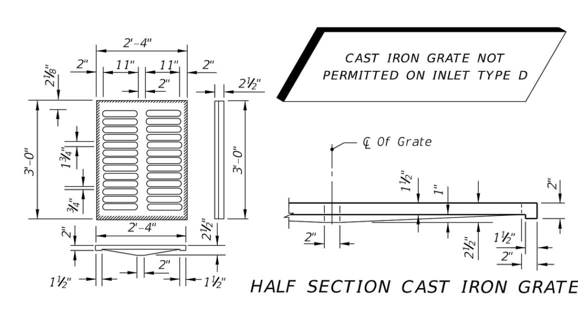

TYPE C
Approx. Weight 235 Lbs.

HALF SECTION CAST IRON GRATES

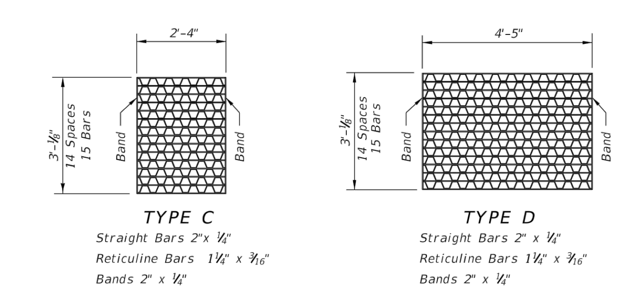

TYPE C
Straight Bars 2"x ¼"
Reticuline Bars 1¼" x 3/16"
Bands 2" x ¼"
Approx. Weight 104 Lbs.

TYPE D
Straight Bars 2" x ¼"
Reticuline Bars 1¼" x 3/16"
Bands 2" x ¼"
Approx. Weight 190 Lbs.

STEEL GRATES
NOTE: Steel Grates Are Required On Inlets With Traversable Slots And On Inlets where Bicycle Traffic Is Anticipated.

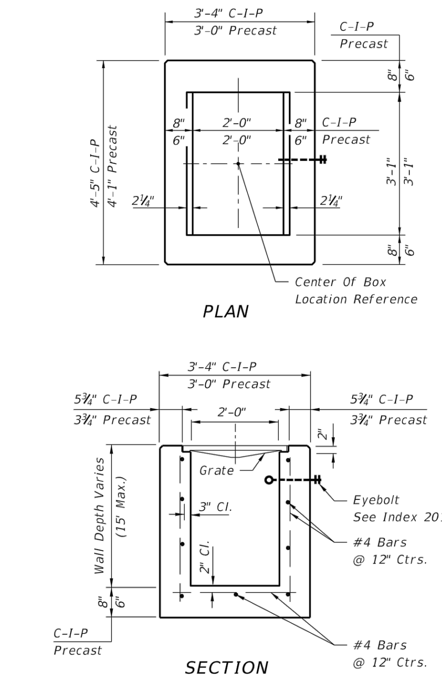

HORIZONTAL WALL REINFORCING SCHEDULES (TABLE 1)

WALL DEPTH	SCHEDULE	AREA (in.²/ft.)	MAX. SPACING BARS	MAX. SPACING WWF
0'-15'	A12	0.20	12"	8"

TYPE C

Recommended Maximum Pipe Size:

2'-0" Wall - 18" Pipe
3'-1" Wall - 24" Pipe (18" where an 18" pipe enters a 2'-0" wall)

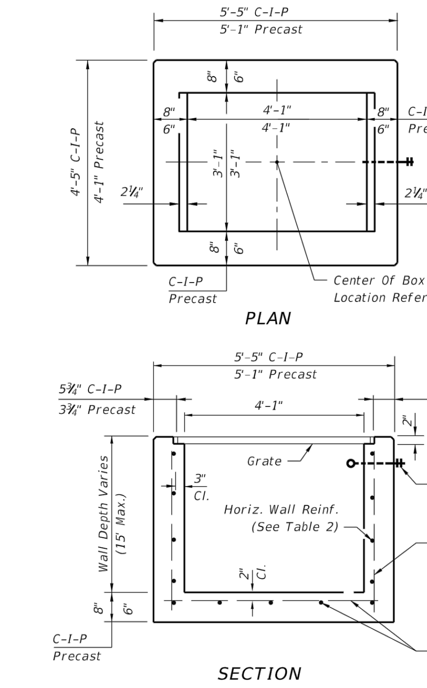

HORIZONTAL WALL REINFORCING SCHEDULES (TABLE 2)

WALL DEPTH	SCHEDULE	AREA (in.²/ft.)	MAX. SPACING BARS	MAX. SPACING WWF
0'-6'	A12	0.20	12"	8"
6'-10'	A6	0.20	6"	5"
10'-13'	A4	0.20	4"	3"
10'-15'	B5.5	0.24	5½"	5"

TYPE D

Recommended Maximum Pipe Size:

3'-1" Wall - 24" Pipe
4'-1" Wall - 36" Pipe

GENERAL NOTES

1. These inlets are suitable for bicycle traffic and are to be used in ditches, medians and other areas subject to infrequent traffic loadings but are not to be placed in areas subject to any heavy wheel loads. These inlets may be placed in areas subject to occasional pedestrian traffic such as landscaped areas and pavement areas where pedestrians can walk around the inlet.
2. Inlets subject to minimal debris should be constructed without slots. Where debris is a problem inlets should be constructed with slots. Slotted inlets located within roadway clear zones and areas subject to pedestrians shall have traversable slots. The traversable slot modification is not adaptable to inlet Type H. Slots may be constructed at either or both ends as shown on plans. Traversable slots shall not be used in areas subject to occasional bicycle traffic.
3. Steel grates are to be used on all inlets where bicycle traffic is anticipated. Steel grates are to be used on all inlets with traversable slots. Either cast iron or steel grates may be used on inlets without slots where bicycle traffic is not anticipated. Either cast iron or steel grates may be used on all inlets with non-traversable slots. Subject to the selection described above, when Alternate G grate is specified in the plans, either the steel grate, hot dip galvanized after fabrication, or the cast iron grate may be used, unless the plans stipulate the particular type.
4. Recommended maximum pipe sizes shown are for concrete pipe. Size for other types of pipe must be checked for fit.
5. All exposed edges and corners shall be ¾" chamfer or tooled to ¼" radius.
6. Concrete inlet pavement to be used on inlets without slots and inlets with non-traversable slots only when called for in the plans; but required on all traversable slot inlets. Cost to be included in contract unit price for inlets. Quantities shown are for information only.
7. Traversable slots constructed in existing inlets shall be paid for as inlets partial. For conversion work and method of payment see 'TRAVERSABLE SLOT INLETS (PARTIAL) FOR EXISTING INLETS'.
8. Sodding to be used on all inlets not located in paved areas and paid for under contract unit price for Performance Turf, SY.
9. For supplementary details see Index No. 201.
10. All reinforcing is Grade 60 bars with 2" min. cover unless otherwise noted. Bars to be cut or bent for 1½" clearance around pipe opening. Provide one additional #4 bar above and at each side of pipe opening.

DITCH BOTTOM INLET D & C
FDOT INDEX 232

CURB RAMP DETECTABLE WARNING DETAIL

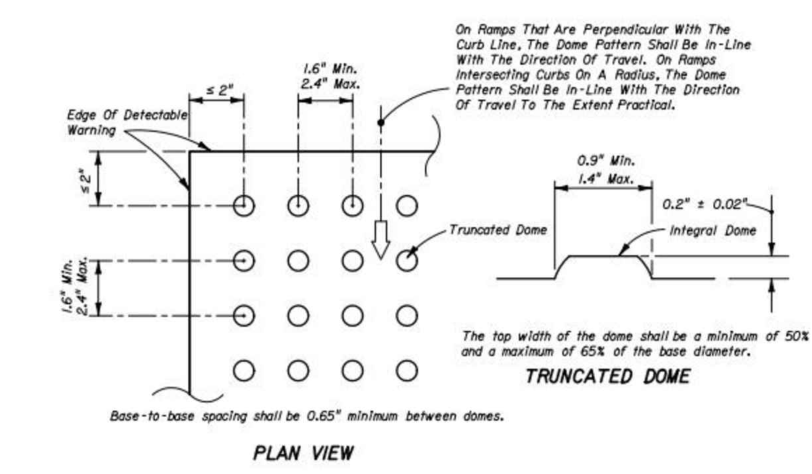

All Sidewalk Curb Ramps Shall Have Detectable Warning Surfaces That Extend The Full Width Of The Ramp And In The Direction Of Travel 24 Inches (610 mm) From The Back Of Curb.

CURB RAMP DETECTABLE WARNING DETAIL

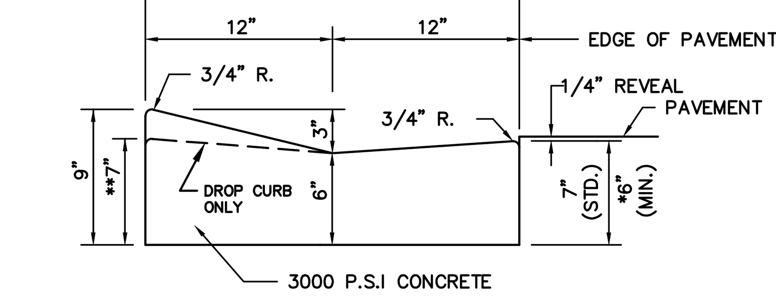

* WHEN USED ON HIGH SIDE OF ROADWAYS, THE CROSS SLOPE OF THE GUTTER SHALL MATCH THE CROSS SLOPE OF THE ADJACENT PAVEMENT. THE THICKNESS OF THE LIP SHALL BE 6", UNLESS OTHERWISE SHOWN SHOWN ON PLANS.

** DROP CURB AT SIDEWALK LOCATIONS AS INDICATED ON PAVING, GRADING & DRAINAGE PLAN SHEETS.

24" CONCRETE VALLEY CURB
N.T.S.

CLAY CORE BERM DETAIL

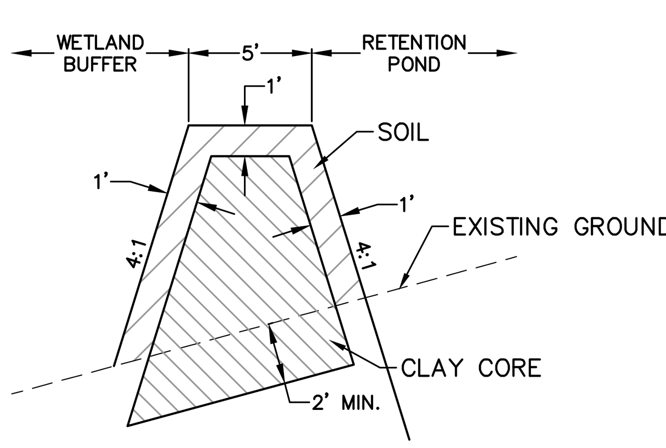

CLAY CORE BERM DETAIL
NTS

FLARED END SECTION

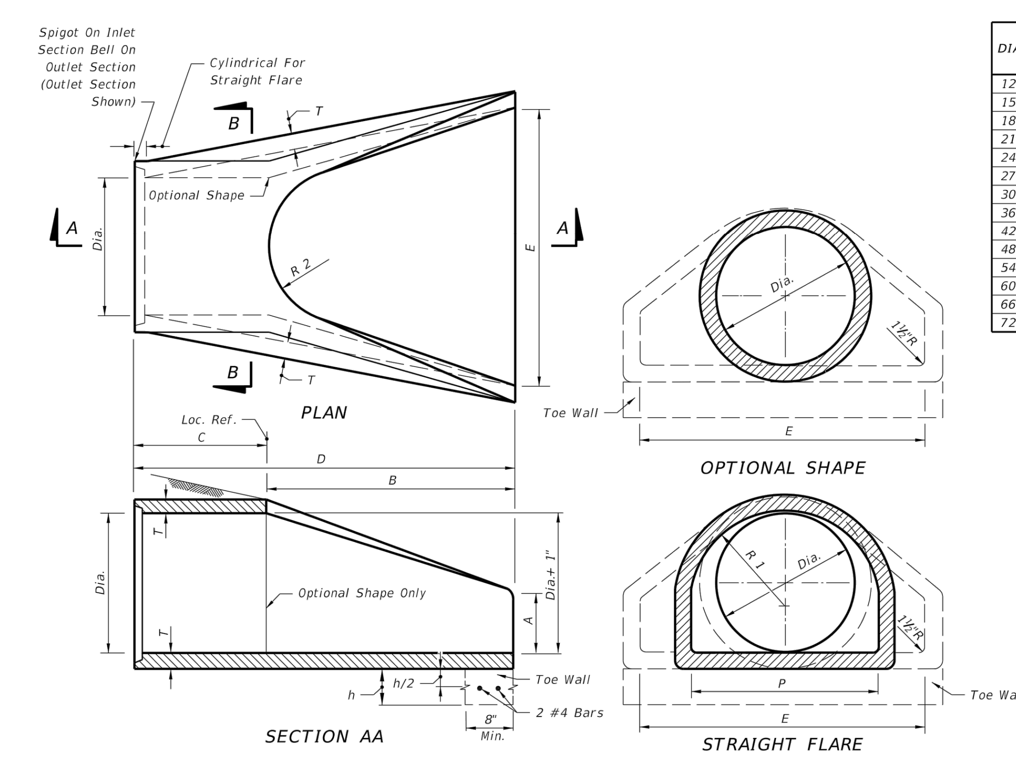

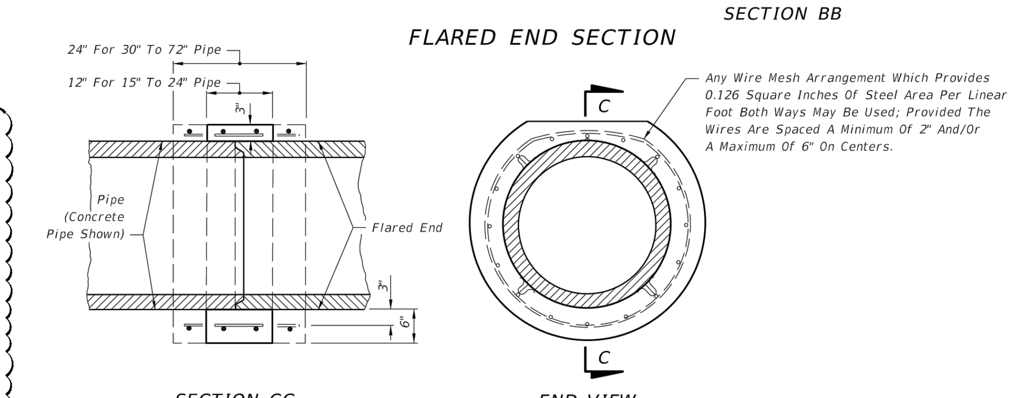

REINFORCED CONCRETE JACKET DETAIL

DIA.	T	REINF. (in²/ft)	BELL Or Spigot	A	B	C	D	E	P	R 1	R 2	FLAT	WEIGHT (lb)	h	TOE WALL CLASS I CONC (CY)
12"	2"	0.07	1½"	4"	2'-0"	4'-0⅞"	6'-0⅞"	2'-0"	19 15/16"	10⅛"	9"	3½"	530	12"	.06
15"	2¼"	0.07	2"	6"	2'-3"	3'-10"	6'-1"	2'-6"	24 5/16"	12½"	11"	3½"	740	12"	.07
18"	2½"	0.07	2½"	9"	2'-3"	3'-10"	6'-1"	3'-0"	29"	15½"	12"	4"	990	15"	.11
21"	2¾"	0.07	2¼"	9"	2'-11"	3'-2"	6'-1"	3'-6"	31⅝"	16⅛"	13"	4"	1280	15"	.12
24"	3"	0.07	2½"	9½"	3'-7½"	2'-6"	6'-1½"	4'-0"	33 9/16"	16 13/16"	14"	4½"	1520	18"	.17
27"	3¼"	0.148	2½"	10½"	4'-0"	2'-1½"	6'-1½"	4'-6"	36"	18 9/16"	14½"	4½"	1930	18"	.19
30"	3½"	0.148	3"	1'-0"	4'-6"	1'-7¾"	6'-1¾"	5'-0"	37"	18½"	15"	5"	2190	21"	.24
36"	4"	0.148	3½"	1'-3"	5'-3"	2'-10¾"	8'-1¾"	6'-0"	47 13/16"	24 5/16"	20"	5½"	4100	21"	.29
42"	4½"	0.148	3¾"	1'-9"	5'-3"	2'-11"	8'-2"	6'-6"	53⅞"	27½"	22"	5½"	5380	24"	.36
48"	5"	0.148	4¼"	2'-0"	6'-0"	2'-2"	8'-2"	7'-0"	56½"	28½"	22"	5¾"	6550	24"	.39
54"	5½"	0.174	4¾"	2'-3"	5'-5"	2'-11"	8'-4"	7'-6"	65½"	33⅛"	24"	6¼"	8040	24"	.42
60"	6"	0.174	5"	2'-6"	5'-0"	3'-3"	8'-3"	8'-0"	72½"	36 11/16"	24"	6¾"	8750	24"	.44
66"	6½"	0.174	5½"	2'-0"	6'-6"	1'-9"	8'-3"	8'-6"	72"	36⅛"	24"	7¼"	10630	24"	.47
72"	7"	0.174	6"	2'-0"	6'-6"	1'-9"	8'-3"	9'-0"	77 13/16"	38 15/16"	24"	7¾"	12520	24"	.50

GENERAL NOTES

1. Flared end sections shall conform to the requirements of ASTM C76 with the exception that dimensions and reinforcement shall be as prescribed in the table above. Circumferential reinforcement may consist of either one cage or two cages of steel. Compressive strength of concrete shall be 4000 psi. Shop drawings for flared end sections having dimensions other than above must be submitted for approval to the State Drainage Engineer.
2. Connections between the flared end section and the pipe culvert may be any of the following types unless otherwise shown on the plans.
   a. Joints meeting the requirements of Section 449 of the Standard Specifications (O-Ring Gasket). Flared end section joint dimensions and tolerances shall be identical or compatible to those used in the pipe culvert joint. When pipe culvert and flared end section manufacturers are different, the compatibility of joint designs shall be certified to by the manufacturer of the flared end sections.
   b. Joints sealed with preformed plastic gaskets. The gaskets shall meet the requirements of Section 942-2 of the Standard Specifications and the minimum sizes for gaskets shall be as that specified for equivalent sizes of elliptical pipe.
   c. Reinforced concrete jackets, as detailed on this drawing. Cost of the reinforced concrete jacket to be included in the contract unit price for the flared end section. When non-coated corrugated metal pipe is called for in the plans, the pipe shall be bituminous coated in the jacketed area as specified on Index No. 280. Bituminous coating to be included in the contract unit price for the pipe culvert. Concrete jacket shall be as specified on Index No. 280. Cost of concrete and reinforcement shall be included in the contract unit price for the pipe culvert.
3. Toe walls shall be constructed when shown on the plans or at locations designated by the Engineer. Toe walls are to be cast-in-place with Class I Concrete and paid for under the contract unit price for Flared End Section (Concrete), EA. Reinforcing steel shall also be included in the cost of the Flared End Section (Concrete), EA.
4. On skewed pipe culverts the flared end sections shall be placed in line with the pipe culvert. Side slopes shall be warped as required to fit the flared end sections.
5. Flared End Section to be paid for under the contract unit price for Flared End Section (Concrete), EA. Sodding shall be in accordance with Index No. 281, and paid for under the contract unit price for Performance Turf, SY.

DESIGN NOTES

1. Flared end sections are intended for use outside the clear zone on median drain and cross drain installation, except that flared end sections for pipe sizes 12" and 15" are permitted within the clear zone. When the slope intersection permits, 12" and 15" flared end sections may be located with the culvert opening as close as 8' beyond the outside edge of the shoulder. Flared end sections are not intended for side drain installations.
2. Reinforced concrete jackets shall be used at all locations where high velocities and/or highly erosive soils may cause disjointing. These locations are to be shown on the plans.
3. Toe walls shall be used whenever the anticipated velocity of discharge and soil type are such that erosive action would occur. Toe walls are not required where ditch pavement is provided, except when disjointing would occur if the ditch pavement should fail.

FLARED END SECTION
FDOT INDEX 270

TYPICAL POND SECTIONS

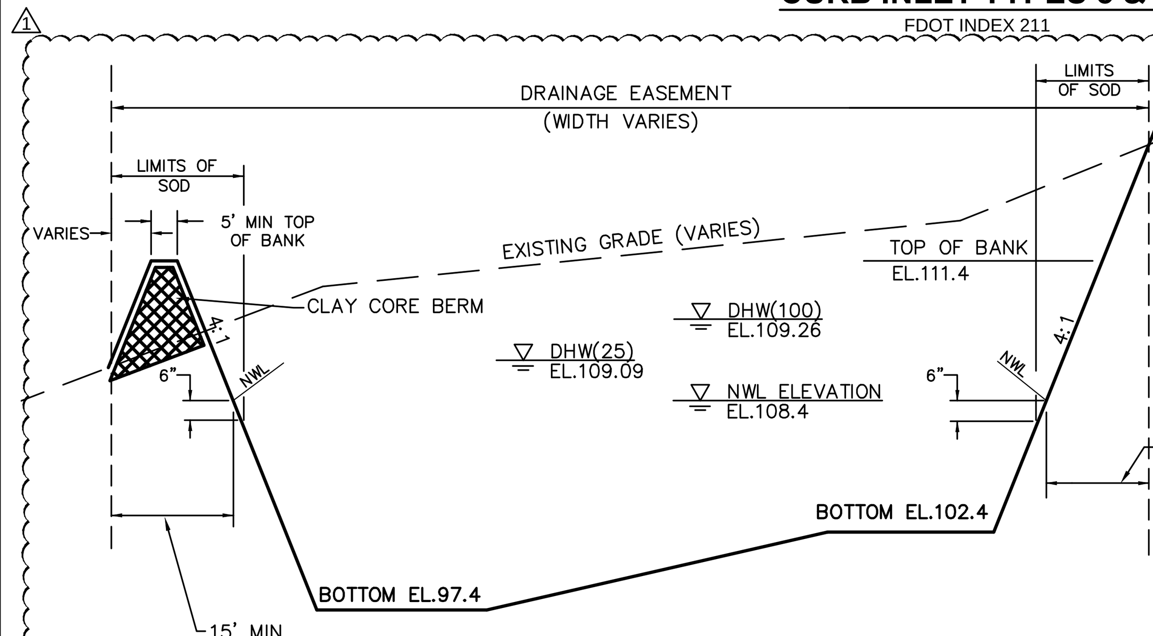

TYPICAL POND SECTION 230/11
N.T.S.

SEE SHEET 11 FOR POND

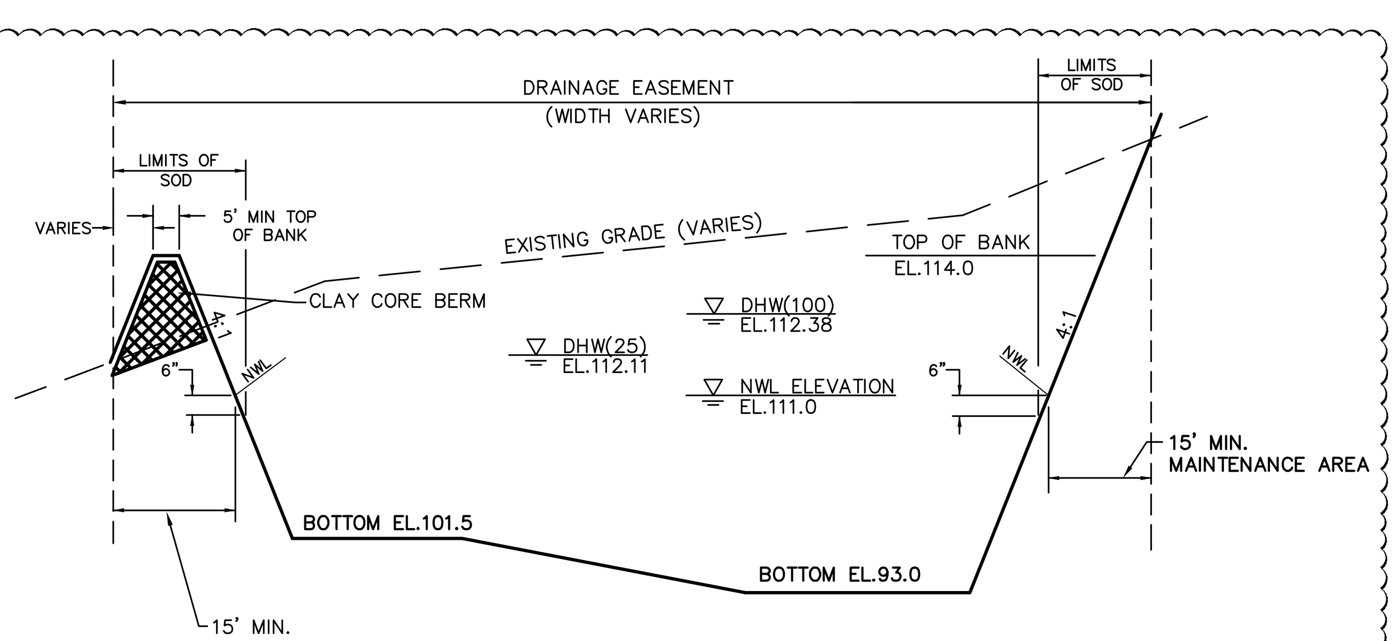

TYPICAL POND SECTION 180/11
N.T.S.

SEE SHEET 11 FOR POND

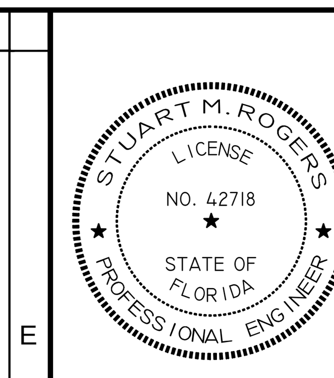

12-2-2014

JOB NO.	EPN	DATE	DESIGNED	DRAWN	CHECKED	Q.C.
0597-0025	137	8-8-2014	JD	AH	SR	

NO.	DATE	REVISIONS	APP'D BY
1	11-6-14	PASCO COUNTY COMMENTS	

DESIGNED FOR
EPPERSON RANCH, LLC
2502 NORTH ROCKY POINT DRIVE, SUITE 1050, TAMPA, FLORIDA 33607
PHONE: (813) 288-8078

PROJECT NAME
PARK PLACE ENTRANCE ROAD

SHEET NAME
DRAINAGE DETAILS

FLORIDA DESIGN CONSULTANTS, INC.
THINK IT. ACHIEVE IT.
707 N. FRANKLIN STREET, 6TH FLOOR, TAMPA, FLORIDA 34655
PHONE: (800) 532 - 1047 FAX: (727) 848 - 3648 WWW.FLDESIGN.COM C.A. NO. 7421

SHEET 12 OF 19

©Copyright 2014 Florida Design Consultants, Inc. Drawings and concepts may not be used or reproduced without written permission.

K:\137\PROJDATA\ConstDocs\PLANS\EPPERSON RANCH BLVD\137_DTPA-1-ERB.dwg - Dec 23, 2014 @ 3:47pm - ahulbert
K:\137\PROJDATA\ConstDocs\PLANS\EPPERSON RANCH BLVD\137_DTPA-1-ERB.dwg, DTPA-01, 12/23/2014 3:47:50 PM, ahulbert

	1	2	3	4	5	6	7

SINGLE AND MULTIPLE ROUND CONCRETE PIPE

DIMENSIONS AND QUANTITIES

	D	X	A	B	C	E	F	G	H ■	M Single Pipe	M Double Pipe	M Triple Pipe	M Quad. Pipe	N	5½" CONCRETE SLAB (CY) ◪ Single Pipe	Double Pipe	Triple Pipe	Quad. Pipe	SODDING (SY) Single Pipe	Double Pipe	Triple Pipe	Quad. Pipe
1:2 Slope	15"	2'-7"	1.92'	2.18'	4.10'	2.06'	5'	1.22'	2.9'	4.63'	7.21'	9.79'	12.37'	1.19'	0.38	0.58	0.77	0.96	21	24	27	30
	18"	2'-10"	1.97'	2.74'	4.71'	2.56'	6'	1.41'	3.4'	4.92'	7.75'	10.58'	13.42'	1.21'	0.44	0.65	0.87	1.09	22	25	28	31
	24"	3'-5"	2.06'	3.85'	5.91'	3.56'	7'	1.73'	3.4'	5.50'	8.92'	12.33'	15.75'	1.25'	0.54	0.83	1.12	1.42	24	28	32	35
	30"	4'-3"	2.15'	4.95'	7.10'	4.56'	8'	2.00'	3.4'	6.08'	10.33'	14.58'	18.83'	1.29'	0.66	1.09	1.50	1.91	26	31	35	40
	36"	5'-1"	2.25'	6.08'	8.33'	5.56'	9'	2.24'	3.4'	6.67'	11.75'	16.83'	21.92'	1.33'	0.81	1.38	1.95	2.51	28	34	39	45
	42"	6'-0"	2.34'	7.21'	9.55'	6.56'	10'	2.45'	3.4'	7.25'	13.25'	19.25'	25.25'	1.38'	0.97	1.70	2.45	3.19	30	37	43	50
	48"	6'-9"	2.43'	8.33'	10.76'	7.56'	11'	2.65'	3.4'	7.83'	14.58'	21.33'	28.08'	1.42'	1.13	2.04	2.93	3.84	32	39	47	54
	54"	7'-8"	2.52'	9.44'	11.96'	8.56'	12'	2.83'	3.4'	8.42'	16.08'	23.75'	31.42'	1.46'	1.31	2.44	3.58	4.72	34	42	51	59
	60"	8'-6"	2.62'	10.56'	13.18'	9.56'	14'	3.00'	4.4'	9.00'	17.50'	26.00'	34.50'	1.50'	1.51	2.89	4.28	5.68	36	45	55	64
	66"	9'-2"	2.71'	11.68'	14.39'	10.56'	15'	3.18'	4.4'	9.58'	18.75'	27.92'	37.08'	1.54'	1.68	3.25	4.84	6.43	38	48	58	68
	72"	10'-0"	2.80'	12.80'	15.60'	11.56'	16'	3.30'	4.4'	10.16'	20.16'	30.16'	40.16'	1.58'	1.89	3.74	5.59	7.45	40	51	62	73
1:4 Slope	15"	2'-7"	2.27'	4.09'	6.36'	4.03'	8'	1.22'	4.0'	4.63'	7.21'	9.79'	12.37'	1.19'	0.57	0.87	1.15	1.44	23	26	29	32
	18"	2'-10"	2.36'	5.12'	7.48'	5.03'	9'	1.41'	4.0'	4.92'	7.75'	10.58'	13.42'	1.21'	0.66	0.99	1.31	1.65	25	28	31	35
	24"	3'-5"	2.53'	7.18' △	9.71'	7.03' △	11'	1.73'	4.0'	5.50'	8.92'	12.33'	15.75'	1.25'	0.85	1.30	1.75	2.20	28	32	36	40
	30"	4'-3"	2.70'	9.25'	11.95'	9.03'	13'	2.00'	4.0'	6.08'	10.33'	14.58'	18.83'	1.29'	1.10	1.74	2.39	3.05	31	36	41	46
	36"	5'-1"	2.87'	11.31' ◇	14.18'	11.03' ◇	15'	2.24'	4.0'	6.67'	11.75'	16.83'	21.92'	1.33'	1.32	2.21	3.08	3.96	34	40	46	52
	42"	6'-0"	3.05'	13.37'	16.42'	13.03'	17'	2.45'	4.0'	7.25'	13.25'	19.25'	25.25'	1.38'	1.58	2.76	3.91	5.09	38	44	51	58
	48"	6'-9"	3.22'	15.43'	18.65'	15.03'	19'	2.65'	4.0'	7.83'	14.58'	21.33'	28.08'	1.42'	1.85	3.30	4.73	6.17	41	48	56	63
	54"	7'-8"	3.39'	17.49'	20.88'	17.03'	21'	2.83'	4.0'	8.42'	16.08'	23.75'	31.42'	1.46'	2.14	3.95	5.77	7.58	44	52	61	69
	60"	8'-6"	3.56'	19.55'	23.11'	19.03'	23'	3.00'	4.0'	9.00'	17.50'	26.00'	34.50'	1.50'	2.45	4.66	6.87	9.07	47	56	66	75
	66"	9'-2"	3.73'	21.62'	25.35'	21.03'	25'	3.18'	4.0'	9.58'	18.75'	27.92'	37.08'	1.54'	2.88	5.54	8.18	10.84	49	59	69	80
	72"	10'-0"	3.91'	23.68'	27.59'	23.03'	27'	3.30'	4.0'	10.16'	20.16'	30.16'	40.16'	1.58'	3.54	6.61	9.87	13.13	52	63	74	85

◪ See General Note No. 5.
See Sheet 5 For 3" Slab Quantities

■ Values shown for estimating pipe quantities and are for information only.

B	E	
△ 6.42'	△ 6.25'	Dimensions permitted to allow use of 8' standard pipe lengths.
◇ 10.40'	◇ 10.10'	Dimensions permitted to allow use of 12' standard pipe lengths.

△ ◇ Concrete slab shall be deepened to form bridge across crown of pipe. See section below.

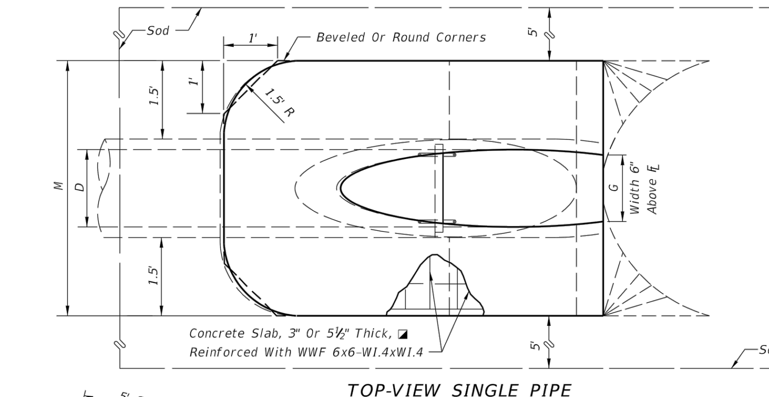

TOP-VIEW SINGLE PIPE

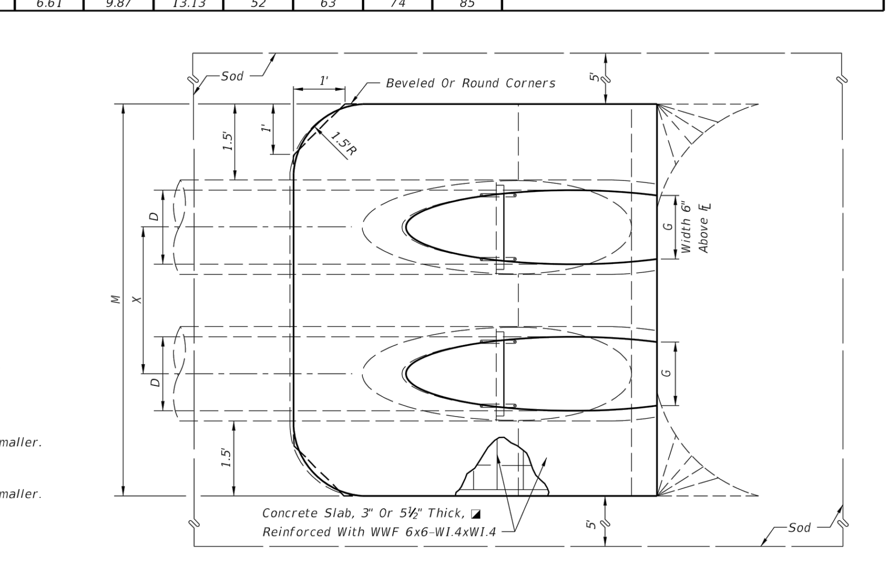

TOP-VIEW MULTIPLE PIPE

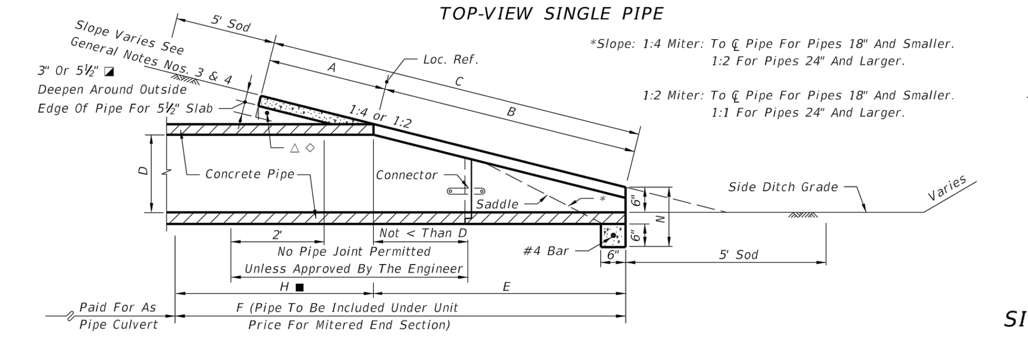

SECTION

*Slope: 1:4 Miter: To ℄ Pipe For Pipes 18" And Smaller.
1:2 For Pipes 24" And Larger.

1:2 Miter: To ℄ Pipe For Pipes 18" And Smaller.
1:1 For Pipes 24" And Larger.

NOTE: See sheet 6 for details and notes.

SINGLE AND MULTIPLE ROUND CONCRETE PIPE

SINGLE AND MULTIPLE ELLIPTICAL CONCRETE PIPE

DIMENSIONS & QUANTITIES

	Rise R	Span S	X	A	B	C	E	F	G	H ■	M Single Pipe	M Double Pipe	M Triple Pipe	M Quad. Pipe	N	5½" CONC. SLAB (CY) ◪ Single Pipe	Double Pipe	Triple Pipe	Quad. Pipe	SODDING (SY) Single Pipe	Double Pipe	Triple Pipe	Quad. Pipe
1:2 Slope	12"	18"	2'-10"	1.97'	1.62'	3.59'	1.56'	4'	1.50'	2.4'	4.92'	7.75'	10.58'	13.42'	1.21'	0.30	0.49	0.67	0.85	21	24	27	30
	14"	23"	3'-4"	2.01'	1.99'	4.00'	1.89'	5'	1.90'	3.1'	5.38'	8.71'	12.04'	15.38'	1.23'	0.37	0.59	0.81	1.02	22	26	29	33
	19"	30"	4'-0"	2.11'	2.92'	5.03'	2.73'	6'	2.37'	3.3'	6.04'	10.04'	14.04'	18.04'	1.27'	0.50	0.80	1.09	1.39	24	28	33	37
	24"	38"	5'-0"	2.20'	3.85'	6.05'	3.56'	7'	2.85'	3.4'	6.79'	11.79'	16.79'	21.79'	1.31'	0.62	1.03	1.45	1.86	26	31	37	42
	29"	45"	5'-11"	2.34'	4.79'	7.13'	4.39'	8'	3.19'	3.6'	7.50'	13.42'	19.33'	25.25'	1.38'	0.75	1.30	1.84	2.39	28	34	41	47
	34"	53"	7'-0"	2.43'	5.72'	8.15'	5.23'	9'	3.57'	3.8'	8.25'	15.25'	22.25'	29.25'	1.42'	0.90	1.61	2.32	3.03	30	37	45	53
	38"	60"	7'-10"	2.52'	6.46'	8.98'	5.89'	9'	3.95'	3.1'	8.92'	16.75'	24.58'	32.42'	1.46'	1.03	1.89	2.74	3.60	31	40	49	57
	43"	68"	8'-11"	2.62'	7.39'	10.01'	6.73'	10'	4.28'	3.3'	9.67'	18.58'	27.50'	36.42'	1.50'	1.19	2.26	3.33	4.40	33	43	53	63
	48"	76"	9'-11"	2.71'	8.33'	11.04'	7.56'	11'	4.59'	3.4'	10.42'	20.33'	30.25'	40.17'	1.54'	1.38	2.65	3.93	5.21	35	46	57	68
	53"	83"	10'-8"	2.80'	9.26'	12.06'	8.39'	12'	4.77'	3.6'	11.08'	21.75'	32.42'	43.08'	1.58'	1.55	3.03	4.50	5.96	37	49	61	73
	58"	91"	11'-8"	2.90'	10.19'	13.09'	9.23'	13'	5.01'	3.8'	11.83'	23.50'	35.17'	46.83'	1.63'	1.75	3.47	5.20	6.93	39	52	65	78
1:4 Slope	12"	18"	2'-10"	2.36'	3.06'	5.42'	3.03'	5'	1.50'	2.0'	4.92'	7.75'	10.58'	13.42'	1.21'	0.45	0.68	0.92	1.14	23	26	29	32
	14"	23"	3'-4"	2.44'	3.75'	6.19'	3.70'	6'	1.90'	2.3'	5.38'	8.71'	12.04'	15.38'	1.23'	0.53	0.83	1.13	1.42	24	28	32	35
	19"	30"	4'-0"	2.62'	5.47'	8.09'	5.36'	8'	2.37'	2.6'	6.04'	10.04'	14.04'	18.04'	1.27'	0.74	1.15	1.57	1.98	27	32	36	40
	24"	38"	5'-0"	2.79'	7.18'	9.97'	7.03'	10'	2.85'	3.0'	6.79'	11.79'	16.79'	21.79'	1.31'	0.97	1.57	2.19	2.81	30	36	41	47
	29"	45"	5'-11"	3.05'	8.90'	11.95'	8.70'	12'	3.19'	3.3'	7.50'	13.42'	19.33'	25.25'	1.38'	1.22	2.07	2.92	3.77	33	40	46	53
	34"	53"	7'-0"	3.22'	10.62'	13.84'	10.36'	13'	3.57'	2.6'	8.25'	15.25'	22.25'	29.25'	1.42'	1.48	2.62	3.77	4.92	36	44	52	59
	38"	60"	7'-10"	3.39'	11.99'	15.38'	11.70'	15'	3.95'	3.3'	8.92'	16.75'	24.58'	32.42'	1.46'	1.72	3.12	4.53	5.92	38	47	56	65
	43"	68"	8'-11"	3.56'	13.71'	17.27'	13.36'	17'	4.28'	3.6'	9.67'	18.58'	27.50'	36.42'	1.50'	2.02	3.78	5.56	7.32	41	51	61	71
	48"	76"	9'-11"	3.73'	15.43'	19.16'	15.03'	19'	4.59'	4.0'	10.42'	20.33'	30.25'	40.17'	1.54'	2.34	4.49	6.64	8.79	44	55	66	77
	53"	83"	10'-8"	3.91'	17.15'	21.06'	16.70'	20'	4.77'	3.3'	11.08'	21.75'	32.42'	43.08'	1.58'	2.66	5.17	7.66	10.16	47	59	71	83
	58"	91"	11'-8"	4.08'	18.87'	22.95'	18.36'	22'	5.01'	3.6'	11.83'	23.50'	35.17'	46.83'	1.63'	3.02	5.98	8.95	11.90	50	63	76	89

◪ See General Note No. 3.
See Sheet 5 For 3" Slab Quantities

■ Values shown for estimating pipe quantities and are for information only.

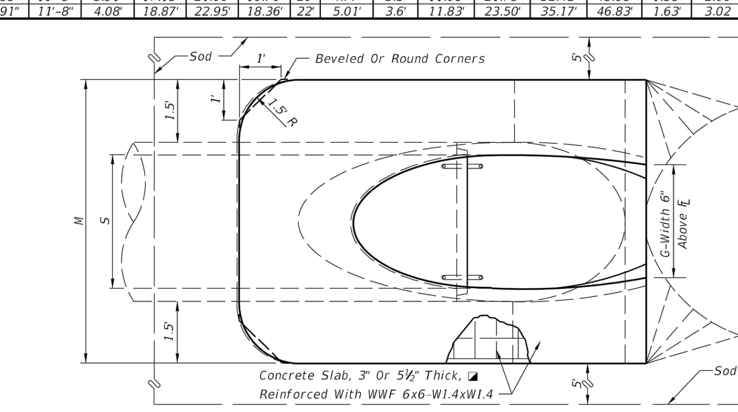

TOP VIEW-SINGLE PIPE

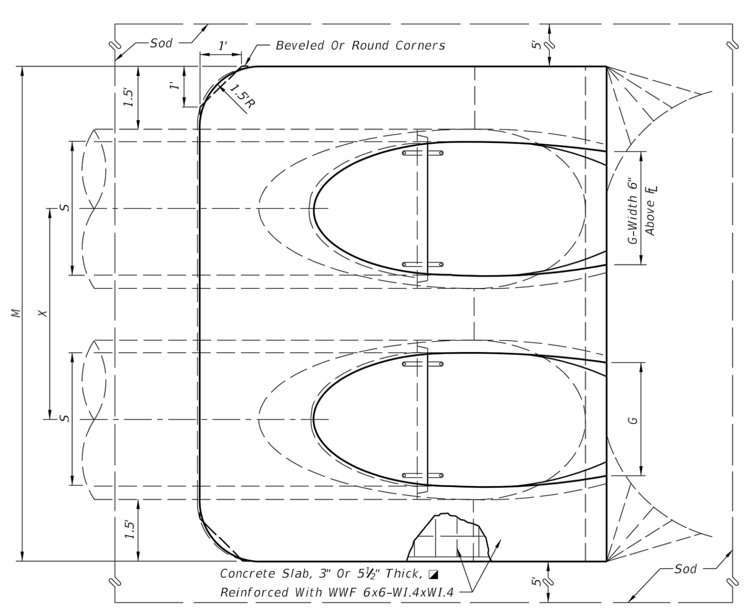

NOTE: See Sheet 6 For Details And Notes.

TOP VIEW - MULTIPLE PIPE

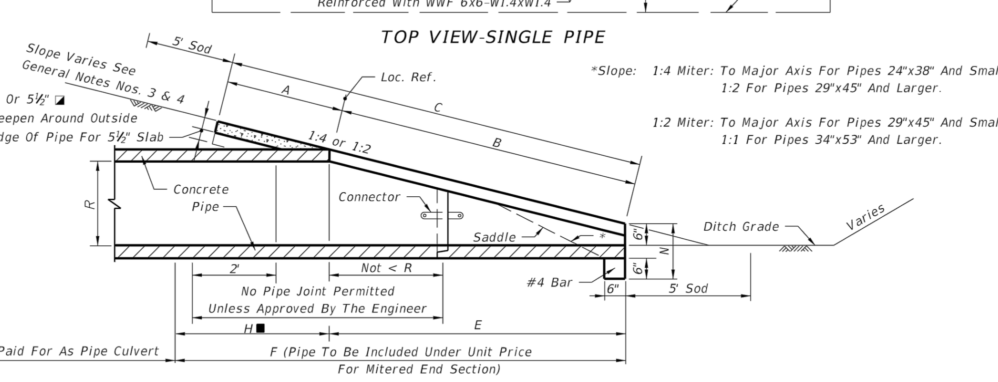

SECTION

*Slope: 1:4 Miter: To Major Axis For Pipes 24"x38" And Smaller.
1:2 For Pipes 29"x45" And Larger.

1:2 Miter: To Major Axis For Pipes 29"x45" And Smaller.
1:1 For Pipes 34"x53" And Larger.

SINGLE AND MULTIPLE ELLIPTICAL CONCRETE PIPE

MITERED END SECTION

CROSS DRAIN

FDOT INDEX 272

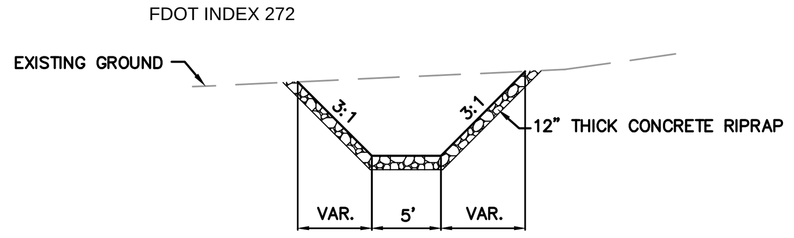

SECTION A

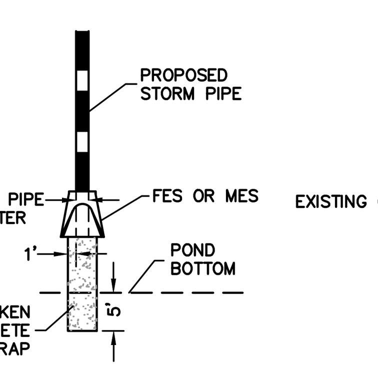

OUTFALL RIP RAP DETAIL

N.T.S.

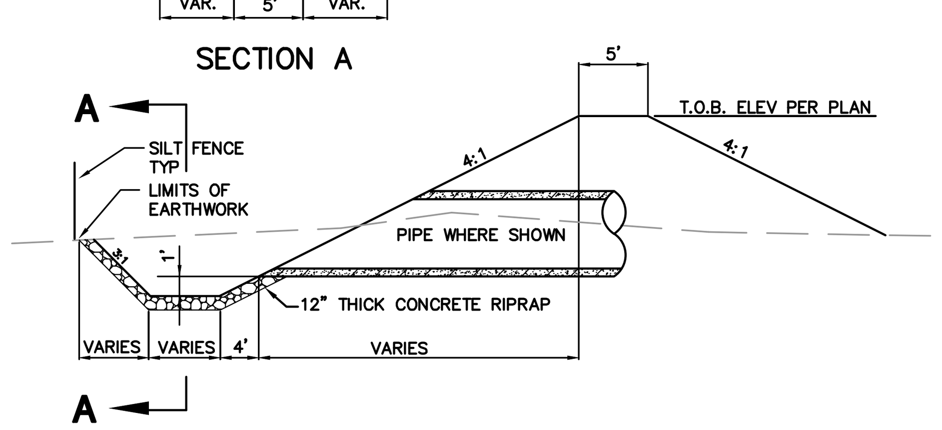

TYPICAL OUTFALL SUMP DETAIL

N.T.S.

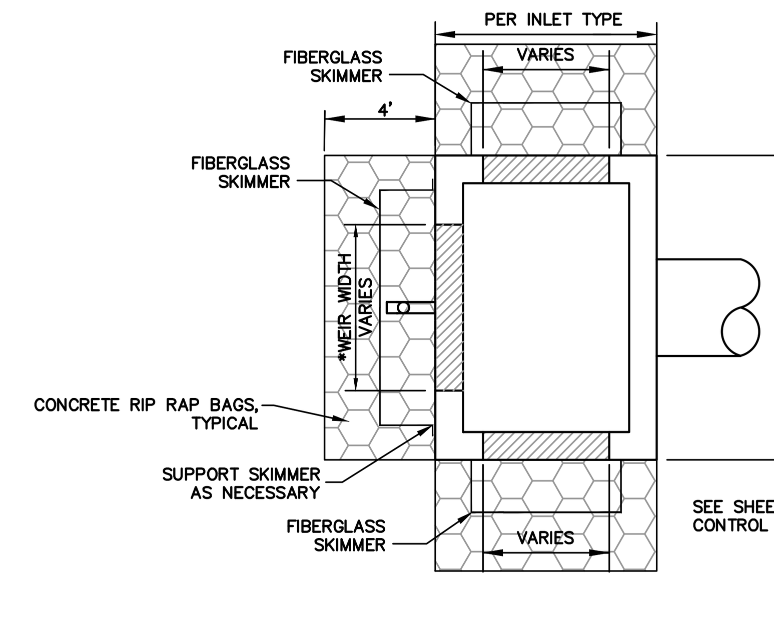

PLAN

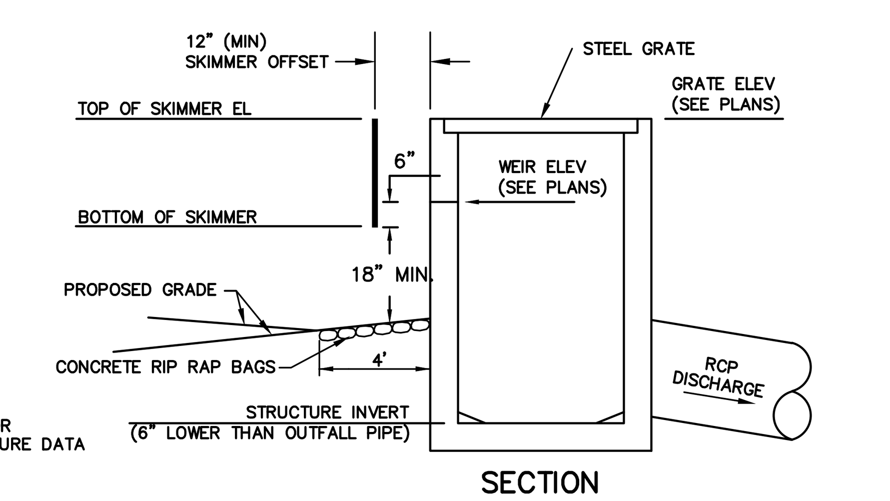

SECTION

TYPICAL DROP STRUCTURE FDOT TYPE (SEE PLANS)

N.T.S.

DROP STRUCTURE WITH BLEED-DOWN ORIFICE DETAIL

N.T.S.

OCS180 AND OCS280

*NOTE: THE USE OF LONG WEIRS MAY REQUIRE THE USE OF THE BOX SIDES FOR THE WEIR CONSTRUCTION

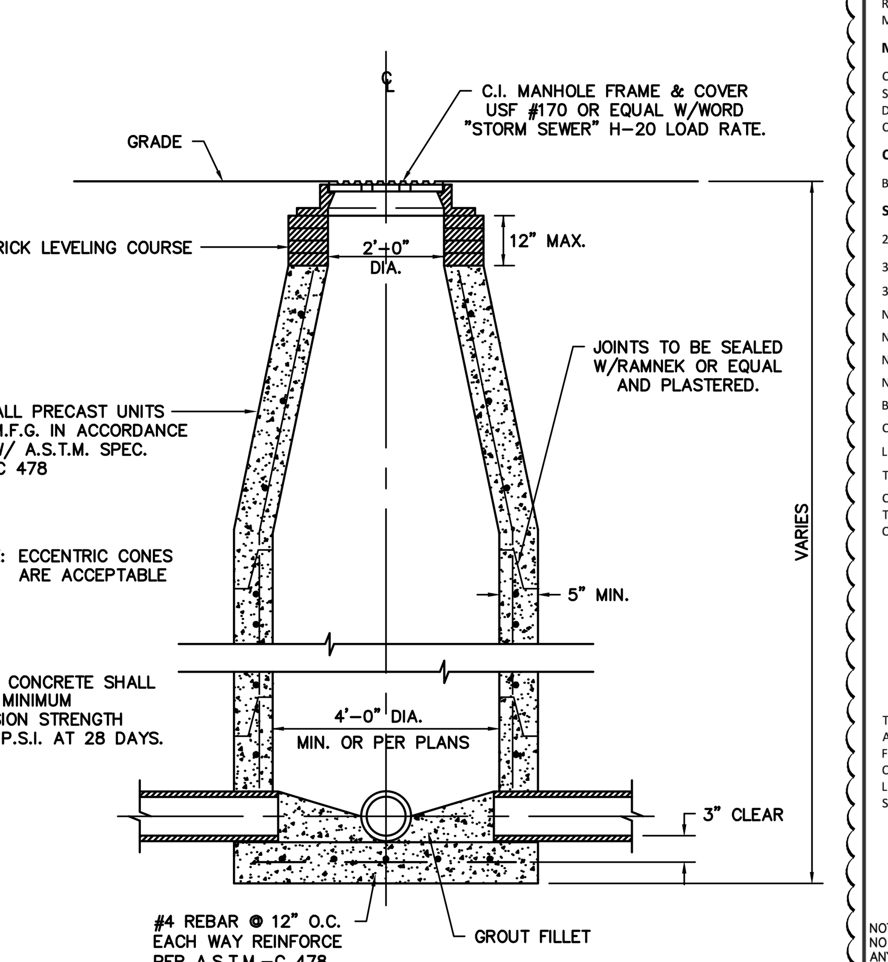

STORM MANHOLE

N.T.S.

△1

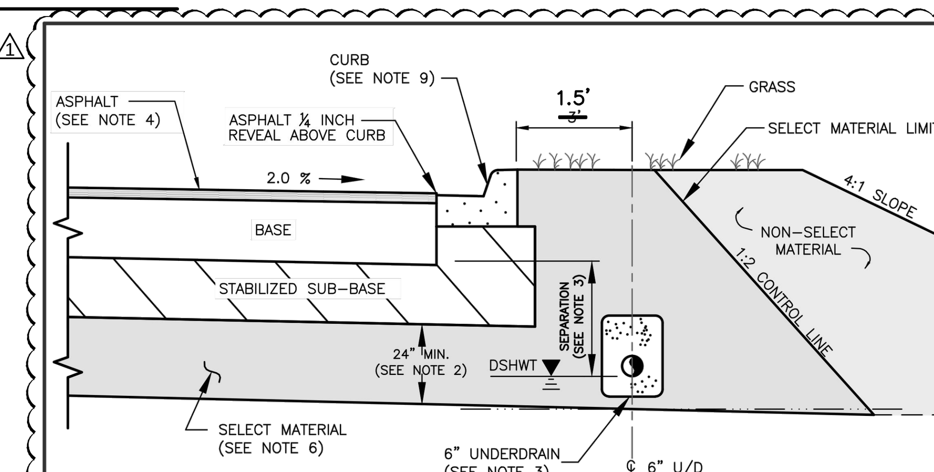

SECTIONAL VIEW

NTS

NOTES:

1. THE MINIMUM VERTICAL SEPARATION BETWEEN THE DESIGN SEASONAL HIGH WATER TABLE (DSHWT) AND THE BOTTOM OF THE BASE AT THE LOWEST EDGE OF PAVEMENT SHALL BE AS FOLLOWS:
   A. LIMEROCK BASE — 24 INCH
   B. SOIL CEMENT BASE — 12 INCH
   C. CRUSHED CONCRETE BASE (IF APPROVED) — 12 INCH
   D. ASPHALT BASE COURSE (ABC) — 12 INCH
2. A MINIMUM TWO (2) FEET OF SELECT MATERIAL CONSISTING OF A–1, A–3 OR A–2–4 WITH A MAXIMUM 15% PASSING THE #200 SIEVE BELOW THE STABILIZED SUB–BASE.
3. IF THE VERTICAL SEPARATION BETWEEN DSHWT AND BOTTOM OF BASE IS LESS THAN 2 FEET, UNDERDRAINS SHALL BE CONSTRUCTED ALONG BOTH SIDES OF THE ROAD. IF 2–3 FEET, UNDERDRAINS SHALL BE CONSTRUCTED ALONG ONE SIDE. THE INVERT OF A SIX (6) INCH UNDERDRAIN SHALL BE TWO (2) FEET MINIMUM BELOW THE BOTTOM OF THE BASE.
4. TYPE 2 THRU TYPE 5 ROADWAYS SHALL CONTAIN A MINIMUM OF 1.5 INCH OF SP ASPHALTIC CONCRETE. COLLECTOR ROADWAYS SHALL HAVE A MINIMUM OF THREE (3) INCHES OF SP ASPHALTIC CONCRETE. TYPE 1 ROADWAYS MAY BE COMPLETED IN STAGES, INITIALLY 2.25 INCHES OF SP 12.5 (S–1) ASPHALT COURSE WITH REQUIRED PAVEMENT MARKINGS AND 0.75 INCHES OF SP 9.5 (S–3) COURSE INSTALLED WITH ANY THERMOPLASTIC STRIPES, PRIOR TO RELEASE OF THE ASSURANCE FOR MAINTENANCE.
5. THE ROAD DESIGN DRAWINGS SHALL CONTAIN SOIL BORING LOCATIONS WITH EXISTING SOIL DATA, OBSERVED WATER LEVEL AND DSHWT SURFACE. UNDERDRAIN OUTFALL POND DATA AND PROXIMATE WETLAND HYDRO PERIOD ELEVATIONS SHALL ALSO BE IDENTIFIED.
6. SELECT MATERIAL SHALL BE PLACED PER FDOT INDEX DRAWINGS 500 & 505.
7. THE REQUIRED MINIMUM STRUCTURAL NUMBER (SN) SHALL BE;
   2.34 MIN. TYPE 2 ROADWAY
   3.50 MIN. TYPE I ROADWAYS
   3.70 MIN. COUNTY COLLECTOR
   4.00 MIN. COUNTY ARTERIAL
8. SOIL CEMENT BASE SHALL NOT BE CONSTRUCTED OVER STABILIZED SUBGRADE EXCEEDING LBR 20. THE COUNTY ASSIGNED LAYER COEFFICIENT FOR A MAXIMUM 12 INCH DEPTH, LBR 20 SHALL BE 0.04 PER INCH.
9. CURB DESIGN IS SITE SPECIFIC AND SHALL BE IDENTIFIED ON PLANS.

NOTE:
NO DEVIATIONS TO THIS DETAIL WILL BE PERMITTED UNLESS APPROVED BY THE COUNTY ENGINEER.
ANY PROPOSED ALTERATIONS SHALL BE CLEARLY IDENTIFIED AND HIGHLIGHTED ON DETAIL.

PASCO COUNTY ENGINEERING SERVICES DESIGN STANDARDS	ROADWAY DESIGN CRITERIA	Sheet No. 1 of 1
	APPROVED BY JCW / BCC APPROVAL REVISED	Index No. 100

C:\Standards\Final\100_Road_Design-Criteria.dwg 09/09/08

EQUIPMENT, PLACEMENT AND SPREADING OF MATERIAL

USE MECHANICAL ROCK SPREADERS, EQUIPPED WITH A DEVICE THAT STRIKES OFF THE ROCK UNIFORMLY TO LAYING THICKNESS AND CAPABLE OF PRODUCING EVEN DISTRIBUTION. FOR ROADWAY WIDTHS OF 20 FEET OR LESS, CROSSOVERS, INTERSECTIONS, RAMP AREAS OR WHERE THE USE OF A MECHANICAL SPREADER IS NOT PRACTICABLE; THE CONTRACTOR MAY SPREAD THE CRUSHED CONCRETE BASE USING BULLDOZERS OR BLADE GRADERS.

TRANSPORT CRUSHED CONCRETE TO THE POINT OF USE, OVER THE BASE PREVIOUSLY PLACED, AND DUMP IT ON THE END OF THE PRECEDING SPREAD. HAULING ON SUBGRADE TO DUMP CRUSHED CONCRETE BASE WILL BE PERMITTED ONLY WHEN, IN THE ENGINEER'S OPINION, THESE OPERATIONS WILL NOT BE DETRIMENTAL TO THE BASE AND SUBGRADE.

CRUSHED CONCRETE SHALL BE SPREAD UNIFORMLY WITHOUT SEGREGATION OF FINE OR COURSE MATERIALS. SEGREGATED AREAS SHALL BE REPLACED WITH PROPERLY GRADED CRUSHED CONCRETE AFTER REMOVAL.

THE MINIMUM THICKNESS OF THE CRUSHED CONCRETE BASE SHALL BE INDICATED ON THE PLANS. WHEN THE SPECIFIED COMPACTED THICKNESS OF THE CRUSHED CONCRETE BASE IS **GREATER THAN SIX INCHES, CONSTRUCT THE BASE IN MULTIPLE COURSES OF EQUAL THICKNESS. INDIVIDUAL COURSES SHALL NOT BE LESS THAN THREE INCHES.** PLACE CRUSHED CONCRETE MATERIAL TO ENSURE THE TOTAL THICKNESS SINGLE SOURCE INTEGRITY AT ANY STATION LOCATION OF THE BASE.

COMPACTING, FINISHING AND TESTING REQUIREMENTS

AFTER SPREADING IS COMPLETED THE CRUSHED CONCRETE SHALL BE UNIFORMLY COMPACTED, WITH WATER BEING ADDED AS REQUIRED TO A **DENSITY OF NOT LESS THAN ONE HUNDRED PERCENT (100%) OF THE MAXIMUM DENSITY AS DETERMINED BY AASHTO T-180.** DURING FINAL COMPACTION OPERATIONS, IF THE BLADING OF ANY AREAS IS NECESSARY TO OBTAIN THE TRUE GRADE AND CROSS SECTION, FREE OF SCABS AND LAMINATIONS, THE COMPACTING OPERATIONS FOR SUCH AREAS SHALL BE COMPLETED PRIOR TO THE PERFORMANCE OF DENSITY TESTS ON THE FINISHED BASE.

MULTIPLE COURSE BASE: CLEAN THE FIRST COURSE OF FOREIGN MATERIAL, THEN BLADE AND BRING IT TO A SURFACE CROSS-SECTION APPROXIMATELY PARALLEL TO THE FINISHED BASE. BEFORE SPREADING ANY MATERIAL FOR THE UPPER COURSES, **OBTAIN DENSITY TESTS FOR THE LOWER COURSES** TO DETERMINE THAT THE REQUIRED COMPACTION [NOT LESS THAN ONE HUNDRED PERCENT (100%) OF THE MAXIMUM DENSITY AS DETERMINED BY AASHTO T-180] HAS BEEN OBTAINED. AFTER SPREADING THE CRUSHED CONCRETE FOR THE TOP COURSE, FINISH AND SHAPE IT'S SURFACE TO PRODUCE THE REQUIRED GRADE AND CROSS-SECTION, FREE OF SCABS AND LAMINATIONS, AFTER COMPACTION.

THE MINIMUM DENSITY THAT WILL BE ACCEPTED AT ANY LOCATION OUTSIDE THE TRAVELED ROADWAY (SUCH AS INTERSECTIONS, CROSSOVERS, TURNOUTS, ETC.) SHALL BE 98% OF THE MAXIMUM DENSITY AS DETERMINED BY AASHTO T-180.

TESTING OF BASE COURSE

THE MINIMUM **FREQUENCY** OF SAMPLING AND TESTING OF CRUSHED CONCRETE MATERIAL, LAB DENSITY, FIELD DENSITY AND THICKNESS SHALL ADHERE TO THE FREQUENCY OF TESTING FOR LIMEROCK BASE IN THE MOST CURRENT EDITION OF "**PASCO COUNTY ENGINEERING SERVICES DEPARTMENT TESTING SPECIFICATIONS FOR CONSTRUCTION OF ROADS, STORM DRAINAGE AND UTILITIES**". ONE PLANT MIX DESIGN, ONE PLANT GRADATION TEST FOR SIEVE ANALYSIS OF FINE AND COARSE AGGREGATES (AASHTO T-27) (FM1-T027) INCLUDING A PLASTICITY INDEX (FM-T090) (AASHTO T-90) FROM THE APPROVED SOURCE SHALL BE SUBMITTED AT ONE PER DAY OR CHANGE OF MATERIAL. ONE ROADWAY FIELD TEST FOR SIEVE ANALYSIS OF FINE AND COARSE AGGREGATES (ASTM C-136) SHALL BE SUBMITTED PER 500 FEET OF ROAD PER DAY PER MIX DESIGN; MINIMUM ONE PER ROAD.

THE CONTRACTOR SHALL BE RESPONSIBLE FOR ALL TESTING PERFORMED IN CONNECTION WITH CONSTRUCTION OF THE BASE.

CORRECTION OF DEFECTS

ALL SEGREGATED AREAS OF FINE OR COURSE CRUSHED CONCRETE SHALL BE REMOVED AND REPLACED WITH PROPERLY GRADED RECLAIMED CONCRETE AGGREGATE BASE MATERIAL. ALL DEFECTS IN MATERIALS AND CONSTRUCTION SHALL BE CORRECTED BY THE CONTRACTOR, AT HIS EXPENSE, AND TO THE SATISFACTION OF THE COUNTY ENGINEER.

PRIMING AND MAINTENANCE

APPLY THE PRIME COAT ONLY WHEN THE BASE MEETS THE SPECIFIED DENSITY REQUIREMENTS AND WHEN THE MOISTURE CONTENT. AT THE TIME OF PRIMING, ENSURE THAT THE BASE IS FIRM, UNYIELDING AND IN SUCH CONDITION THAT NO UNDUE DISTORTION WILL OCCUR. MAINTAIN THE TRUE CROWN AND TEMPLATE, WITH NO RUTTING OR DISTORTION, WHILE APPLYING THE SURFACE COURSE.

PASCO COUNTY TESTING SPECIFICATIONS ON CRUSHED CONCRETE BASE

TESTS FOR BASE THICKNESS, AND DENSITY SHALL BE LOCATED NO MORE THAN THREE HUNDRED (300) FEET APART AND SHALL BE STAGGERED TO THE LEFT, RIGHT, AND ON THE CENTERLINE OF ROADWAY. THERE SHALL BE NO LESS THAN ONE (1) TEST PER STREET. BEARING VALUE, GRADATION AND FIELD TEST FOR SIEVE ANALYSIS OF FINE AND COARSE AGGREGATES (ASTM C-136) SHALL BE NO MORE THAN FIVE HUNDRED (500) FEET.

EXAMPLE: A SEVEN HUNDRED FEET ROAD WOULD REQUIRE TWO FIELD LBR AND GRADATION TESTS, THREE FIELD DENSITY AND THICKNESS TESTS ALONG WITH THE APPROPRIATE LAB TESTING.

NOTE:
NO DEVIATIONS TO THIS DETAIL WILL BE PERMITTED UNLESS APPROVED BY THE COUNTY ENGINEER.
ANY PROPOSED ALTERATIONS SHALL BE CLEARLY IDENTIFIED AND HIGHLIGHTED ON DETAIL.

PASCO COUNTY ENGINEERING SERVICES DESIGN STANDARDS	CRUSHED - CONCRETE BASE SPECIFICATIONS	Sheet No. 2 of 2
	APPROVED BY JCW / BCC APPROVAL REVISED	Index No. 104

C:\Standards\Final\NEW Index #\104_Crush-Conc_BaseSpec.dwg 05/15/09

PASCO COUNTY CRUSHED CONCRETE BASE SPECIFICATIONS

THE WORK SPECIFIED UNDER THIS SECTION CONSISTS OF THE CONSTRUCTION OF ROADWAY BASE UTILIZING CRUSHED CONCRETE (RECLAIMED CONCRETE AGGREGATE BASE MATERIAL) ON A PREPARED STABILIZED SUBGRADE OF LBR 40 WITH A DENSITY OF 98% OF THE MODIFIED PROCTOR MAXIMUM DENSITY AS DETERMINED BY FM 1-T 180, METHOD D, IN CONFORMITY WITH THE LINES, GRADES NOTES AND TYPICAL CROSS SECTIONS SHOWN IN THE PLANS, AND AS DIRECTED BY THE COUNTY ENGINEER.

THE CONSTRUCTION OF CRUSHED CONCRETE BASE SHALL CONFORM TO THE REQUIREMENTS OF THIS SECTION, OR, IN LIEU THEREOF, SUCH REQUIREMENTS AS MAY BE ESTABLISHED BY THE COUNTY ENGINEER DURING CONSTRUCTION. THE COUNTY ENGINEER SHALL HAVE FULL AUTHORITY TO MODIFY THE PROVISIONS OF THIS SECTION AS DEEMED NECESSARY, IN HIS OPINION, TO MEET FIELD CONDITIONS AND REQUIREMENTS.

MATERIALS

CRUSHED CONCRETE MUST BE PRODUCED FROM A SOURCE APPROVED BY FLORIDA DEPARTMENT OF TRANSPORTATION OR THE COUNTY ENGINEER. THE SUPPLIER SHALL HAVE DEPARTMENT OF ENVIRONMENTAL PROTECTION (DEP) PERMIT REQUIREMENTS SECTION 62-701.730 OR BE QUALIFIED AS A CLEAN DEBRIS SOURCE UNDER DEP RULES. THE RECLAIMED CONCRETE AGGREGATE BASE SHALL CONSIST OF CRUSHED CONCRETE MATERIAL DERIVED FROM THE CRUSHING OF HARD PORTLAND CEMENT CONCRETE.

COMPOSITION

BASE MATERIAL SHALL CONFORM TO THE FOLLOWING **GRADATION REQUIREMENTS**:

SIEVE SIZE	PERCENT BY WEIGHT PASSING
2 INCH	100
3/4 INCH	65 to 95
3/8 INCH	40 to 85
No. 4	25 to 65
No. 10	20 to 50
No. 50	5 to 25
No. 200	0 to 10

BASE MATERIAL SHALL CONFORM TO THE FOLLOWING **PLASTICITY REQUIREMENTS**:

CRUSHED CONCRETE BASE SHALL NOT CONTAIN PLASTIC SOILS SUCH THAT THE No. 40 SIEVE MATERIAL SHALL BE NON-PLASTIC.

LIQUID LIMIT (AS DETERMINED BY AASHTO T80) (LESS THAN 25) PER MATERIAL TYPE

THE FINISHED IN-PLACE CRUSHED CONCRETE BASE **LIMEROCK BEARING RATIO** SHALL HAVE A MINIMUM (LBR) OF 150.

CRUSHED CONCRETE BASE SHALL BE FREE OF ALL MATERIALS THAT FALL UNDER THE CATEGORY OF SOLID WASTE OR HAZARD MATERIALS AS DEFINED BY THE STATE OR LOCAL JURISDICTION AND SHALL MEET ALL DEP PERMIT REQUIREMENTS WHICH PERTAIN TO CONSTRUCTION, DEMOLITION AND RECYCLING OF THESE MATERIALS. CRUSHED CONCRETE BASE SHALL BE ASBESTOS FREE. THE FOLLOWING LIMITS SHALL NOT BE EXCEEDED:

BITUMINOUS CONCRETE........1% BY WEIGHT
BRICKS........1% BY WEIGHT
WOOD AND OTHER ORGANIC SUBSTANCES........0.5% BY WEIGHT
HEAVY METALS (EXCEPT LEAD)........0.1% BY WEIGHT
LEAD........5 PARTS PER MILLION
REINFORCED STEEL AND WELDED WIRE FABRIC........0.1% BY WEIGHT
PLASTER AND GYPSUM BOARD........0.1% BY WEIGHT

THE MATERIAL FOR CRUSHED CONCRETE BASE SHALL CONSIST ONLY OF CRUSHED CONCRETE PAVEMENT AND SUCH ADDITIVE MATERIAL AS MAY BE APPROVED BY THE COUNTY ENGINEER FOR THE PURPOSE OF FACILITATING CONSTRUCTION AND ACHIEVING THE DESIRED CHARACTERISTICS OF THE FINISHED IN-PLACED PRODUCT. APPROVAL FROM THE COUNTY ENGINEER IS REQUIRED BEFORE PLACING MATERIAL FROM MORE THAN ONE SOURCE. ONCE APPROVED, A CHANGE IN THE SOURCE OF BASE MATERIAL SHALL REQUIRE ADDITIONAL ACCEPTANCE TESTING. THE MATERIAL SHALL NOT CONTAIN LUMPS, BALLS OR POCKETS OF SAND OR CLAY MATERIAL IN SIZE OR QUANTITY SUFFICIENT TO BE DETRIMENTAL TO THE PROPER BONDING, FINISHING, STRENGTH OF THE CONCRETE BASE. EXISTING BASE IS TO BE REMOVED TO CONSTRUCT THE NEW BASE.

NOTE:
NO DEVIATIONS TO THIS DETAIL WILL BE PERMITTED UNLESS APPROVED BY THE COUNTY ENGINEER.
ANY PROPOSED ALTERATIONS SHALL BE CLEARLY IDENTIFIED AND HIGHLIGHTED ON DETAIL.

PASCO COUNTY ENGINEERING SERVICES DESIGN STANDARDS	CRUSHED - CONCRETE BASE SPECIFICATIONS	Sheet No. 1 of 2
	APPROVED BY JCW / BCC APPROVAL REVISED	Index No. 104

C:\Standards\Final\NEW Index #\104_Crush-Conc_BaseSpec.dwg 05/15/09

SOIL – CEMENT BASE SPECIFICATIONS

DESCRIPTION
CONSTRUCT A BASE COURSE COMPOSED OF A COMBINATION OF SOIL, PORTLAND CEMENT, AND WATER.

MATERIALS
MEET THE FOLLOWING REQUIREMENTS:

CEMENT: PORTLAND CEMENT, TYPE I, II, III, OR TYPE I–P OR TYPE I–S..................SECTION 921

WATER: USE WATER THAT IS FREE FROM SUBSTANCES DELETERIOUS TO HARDENING OF THE SOIL–CEMENT MIXTURE.
CURING MATERIAL: 916–4

USE EMULSIFIED ASPHALT GRADE SS, RS, OR MS AS APPROVED BY THE ENGINEER. DILUTE THESE AS RECOMMENDED BY MANUFACTURER.

SOIL: FOR BASE COURSE CONSTRUCTION, USE EITHER THE MATERIAL EXISTING IN THE LOCATION TO BE OCCUPIED BY BASE, A SUITABLY FRIABLE MATERIAL FURNISHED BY THE CONTRACTOR, OR A COMBINATION OF THESE. IF THE MATERIAL EXISTING IN THE LOCATION TO BE OCUPIED BY THE BASE DOES NOT MEET THE REQUIREMENTS SPECIFIED BELOW, REMOVE AND REPLACED WITH SUITABLE SOIL.

OBTAIN APPROVAL OF THE MATERIAL PITS PRIOR TO USE. EXCAVATE MATERIAL PITS TO ACHIEVE A UNIFORMLY MIXED MATERIAL WITH REASONABLY CONSISTENT CHARACTERISTICS. BLEND STRATA OR DIFFERING MATERIALS IN ACCORDANCE WITH A PROCEDURE APPROVED BY THE ENGINEER. THE COUNTY WILL CONSIDER PROPOSED RECYCLED MATERIALS ON A CASE BY CASE BASIS.

SPECIFIC REQUIREMENTS FOR SOIL:
ORGANIC MATERIAL (AS PER FM 1–T267)..................MAXIMUM 5%
TOTAL CLAY AND SILT CONTENT (MINUS NO. 200 [75 $\mu\Omega$ SIEVE](AS PER FM 1–T088, NO HYDROMETER TEST) ....MAXIMUM 25%
PLASTIC INDEX (AS PER FM 1–T090)..................MAXIMUM 10%
LIQUID LIMIT (AS PER FM 1–T089)..................MAXIMUM 25%
GRADATION:
PASSING 2 INCH [50 MM] SIEVE..................MINIMUM 100%
PASSING NO. 4 [4.75 MM] SIEVE..................MINIMUM 55%
PASSING NO. 10 [2.00 MM] SIEVE..................MINIMUM 37%
(AS PER FM 1–T088)

AS AN EXCEPTION TO THE ABOVE REQUIRMENTS, THE CONTRACTOR MAY USE ANY MATERIAL MEETING THE REQUIREMENTS FOR LIMEROCK.

NOTE:

THE ABOVE SOIIL CEMENT BASE SPECIFICATIONS WERE TAKEN FROM FDOT STANDARD SPECIFICATIONS FOR ROAD AND BRIDGE CONSTRUCTION 2002 MANUAL – SECTION 270. AS SUCH, THE REFERENCED MATERIALS FOR SOIL CEMENT BASE SHALL CONFORM TO THE REQUIREMENTS SPECIFIED IN DIVISION III (MATERIALS) OF THIS FDOT MANUAL AS WELL.

SOIL CEMENT SHALL BE PLANT MIXED. DESIGN MIX SHALL BE 300 PSI AND CONSTRUCTED BASE SHALL NOT EXCEED 350 PSI.

NOTE:
NO DEVIATIONS TO THIS DETAIL WILL BE PERMITTED UNLESS APPROVED BY THE COUNTY ENGINEER.
ANY PROPOSED ALTERATIONS SHALL BE CLEARLY IDENTIFIED AND HIGHLIGHTED ON DETAIL.

PASCO COUNTY ENGINEERING SERVICES DESIGN STANDARDS	SOIL - CEMENT BASE SPECIFICATIONS	Sheet No. 1 of 1
	APPROVED BY JCW / BCC APPROVAL REVISED	Index No. 105

STUART M. ROGERS
LICENSE NO. 42718
STATE OF FLORIDA
PROFESSIONAL ENGINEER

12-2-2014

JOB NO.	EPN	DATE	DESIGNED	DRAWN	CHECKED	Q.C.
0597-0025	137	8-8-2014	JD	AH	SR	

NO.	DATE	REVISIONS	APP'D BY
△1	12-23-2014	ADDED PASCO COUNTY DETAILS	

DESIGNED FOR
EPPERSON RANCH, LLC
2502 NORTH ROCKY POINT DRIVE, SUITE 1050, TAMPA, FLORIDA 33607
PHONE: (813) 288-8078

PROJECT NAME
PARK PLACE ENTRANCE ROAD

SHEET NAME
DRAINAGE DETAILS

FLORIDA DESIGN CONSULTANTS, INC.
THINK IT. ACHIEVE IT.
707 N. FRANKLIN STREET, 6TH FLOOR, TAMPA, FLORIDA 34655
PHONE: (800) 532 - 1047 FAX: (727) 848 - 3648 WWW.FLDESIGN.COM C.A. NO. 7421

SHEET 13 OF 19

©Copyright 2014 Florida Design Consultants, Inc. Drawings and concepts may not be used or reproduced without written permission.

K:\137\PROJDATA\ConstDocs\PLANS\EPPERSON RANCH BLVD\137_DTPA-2-ERB.dwg – Dec 23, 2014 @ 3:48pm – ahulbert
K:\137\PROJDATA\ConstDocs\PLANS\EPPERSON RANCH BLVD\137_DTPA-2-ERB.dwg, DTPA-02, 12/23/2014 3:48:05 PM, ahulbert

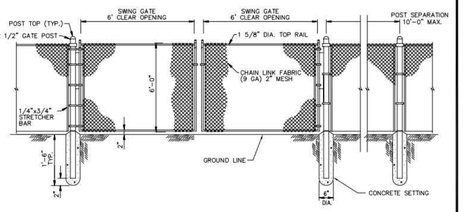

MATERIALS	
ITEM	DESCRIPTION
TYPE	CHAIN LINK
HEIGHT	4', 6', 8' – AS SPECIFIED BY COUNTY
FABRIC	9 GAUGE
POST	2-1/2" DIA. – .085 WALL THICKNESS (MINIMUM)
TOP RAILS	1-5/8" DIA. – .080 WALL THICKNESS (MINIMUM)
GATE	4' x 6' SWING TYPE W/ 2" DIA. – .085 WALL THICKNESS (MINIMUM)
	FRAMEWORK (LOCATED AS INDICATED ON METER SPEC. SHEET)
LATCH	FORK TYPE – PADLOCK COMPATIBLE

CREATED 02/24/03
REVISED

FENCE SPECIFICATIONS

PASCO COUNTY UTILITIES

PROVIDED FOR INFORMATIONAL PURPOSES ONLY. NO MODIFICATIONS WITHOUT WRITTEN PCU APPROVAL

DETAIL 04

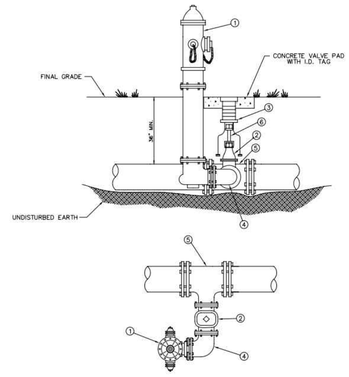

MATERIALS		
ITEM	QUANT.	DESCRIPTION
1	1	HYDRANT, FIRE (5 1/4" VALVE MIN.), PAINTED YELLOW
2	1	6" VALVE, GATE, MJ RESILIENT WEDGE
3	1	BOX, VALVE SLIP TYPE
4	1	6" BEND, ANCHORING, D.I.
5	1	TEE, ANCHORING, MJ
6	*	VALVE EXTENSION ROD, AS NECESSARY (3' MAX. BELOW GRADE)

CREATED 02/24/03
REVISED

FIRE HYDRANT PARALLEL TO THE MAIN

PASCO COUNTY UTILITIES

PROVIDED FOR INFORMATIONAL PURPOSES ONLY. NO MODIFICATIONS WITHOUT WRITTEN PCU APPROVAL

DETAIL 25

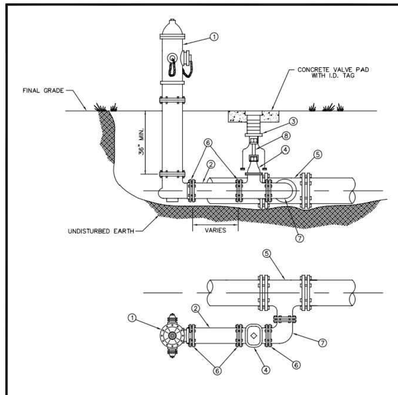

MATERIALS		
ITEM	QUANT.	DESCRIPTION
1	1	HYDRANT, FIRE (5 1/4" VALVE MIN.), PAINTED YELLOW
2	*	6" PIPE, P.V.C. (DR-18)
3	1	BOX, VALVE SLIP TYPE
4	1	6" VALVE, GATE, M.J. RESILIENT WEDGE
5	1	TEE, ANCHORING, M.J.
6	*	6" RESTRAINER GLAND (MEGALUG)
7	1	BEND, ANCHORING, D.I.
8	*	VALVE EXTENSION ROD, AS NECESSARY (3' MAX. BELOW GRADE)

CREATED 02/24/03
REVISED

FIRE HYDRANT PARALLEL TO THE MAIN

PASCO COUNTY UTILITIES

PROVIDED FOR INFORMATIONAL PURPOSES ONLY. NO MODIFICATIONS WITHOUT WRITTEN PCU APPROVAL

DETAIL 26

P.V.C. PIPE RESTRAINT

NOTE: THRUST RESTRAINT AT FITTINGS AND VALVES SHALL BE BY USE OF EBBA IRON MEGALUG RESTRAINERS. THRUST RESTRAINT BETWEEN PIPE JOINTS SHALL BE BY EBBA IRON SERIES 1500 RESTRAINERS.

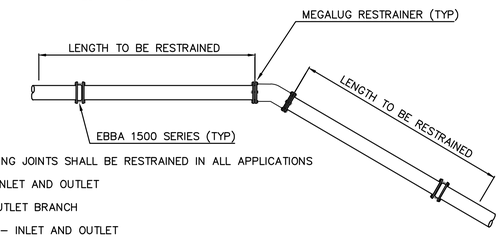

THE FOLLOWING JOINTS SHALL BE RESTRAINED IN ALL APPLICATIONS

1. BEND – INLET AND OUTLET
2. TEE – OUTLET BRANCH
3. OFFSETS – INLET AND OUTLET
4. CAPS
5. PLUGS
6. LAST TWO (2) JOINTS ON A DEAD END RUN (MIN 36')
7. LAST TWO (2) JOINTS ON A HYDRANT RUNOUT (MIN 36')

DUCTILE IRON PIPE RESTRAINT

THRUST RESTRAINT ON SLIPJOINT DUCTILE IRON PIPE SHALL BE U.S. PIPE FIELD LOCK GASKETS FOR TYTON JOINT PIPE OR AMERICAN FAST-GRIP GASKETS FOR AMERICAN FASTITE PIPE. THRUST RESTRAINT ON DUCTILE IRON FITTINGS SHALL BE PROVIDED BY THE USE OF MEGALUG RETAINERS AND MECHANICAL JOINT FITTINGS.

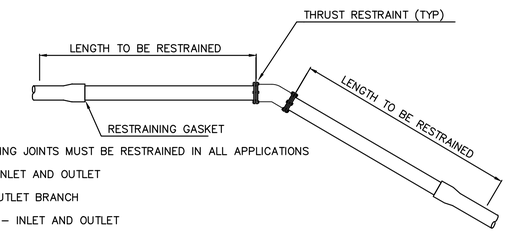

THE FOLLOWING JOINTS MUST BE RESTRAINED IN ALL APPLICATIONS

1. BEND – INLET AND OUTLET
2. TEE – OUTLET BRANCH
3. OFFSETS – INLET AND OUTLET
4. CAPS
5. PLUGS
6. DEAD END RUN
7. HYDRANT RUNOUT

PIPE RESTRAINT LENGTHS IN FEET COMMON FITTINGS

WATER MAINS - TEST PRESSURE 150 PSI

PIPE SIZE	FITTING TYPE 11-1/4°	22-1/2°	45°	90°	DEAD END
4"	2'	4'	8'	20'	45'
6"	3'	6'	12'	28'	63'
8"	4'	7'	15'	36'	82'
10"	4'	9'	18'	43'	98'
12"	5'	10'	21'	50'	116'
16"	6'	13'	26'	63'	148'
20"	7'	15'	31'	76'	179'
24"	9'	17'	36'	87'	208'

FORCE MAINS - TEST PRESSURE 100 PSI

PIPE SIZE	FITTING TYPE 11-1/4°	22-1/2°	45°	90°	DEAD END
4"	1'	3'	6'	13'	30'
6"	2'	4'	8'	19'	42'
8"	2'	5'	10'	24'	55'
10"	3'	6'	12'	29'	66'
12"	3'	7'	14'	34'	77'
16"	4'	8'	18'	42'	99'
20"	5'	10'	21'	50'	119'
24"	6'	11'	24'	58'	139'

RESTRAINT LENGTHS ARE MEASURED FROM THE CENTER LINE OF THE FITTING ALONG THE PIPE IN BOTH DIRECTIONS (EXCEPT DEAD ENDS).

CREATED 02/24/03
REVISED

RESTRAINED JOINT TABLE COMMON FITTINGS

PASCO COUNTY UTILITIES

PROVIDED FOR INFORMATIONAL PURPOSES ONLY. NO MODIFICATIONS WITHOUT WRITTEN PCU APPROVAL

DETAIL 31

PIPE RESTRAINT LENGTHS IN FEET TEES (BRANCH SIDE)

WATER MAINS - TEST PRESSURE 150 PSI

RUN SIZE	BRANCH SIZE 3"	4"	6"	8"	10"	12"	16"	20"	24"
3"	6'	14'	30'	—	—	—	—	—	—
4"	2'	11'	28'	44'	—	—	—	—	—
6"	1'	2'	22'	40'	52'	—	—	—	—
8"	1'	1'	16'	35'	48'	62'	—	—	—
10"	1'	1'	10'	30'	44'	58'	83'	—	—
12"	1'	1'	3'	25'	40'	55'	80'	103'	—
16"	1'	1'	1'	14'	31'	48'	75'	98'	119'
20"	1'	1'	1'	2'	22'	40'	69'	94'	116'
24"	1'	1'	1'	1'	11'	31'	63'	89'	111'

RESTRAINT LENGTHS ARE MEASURED FROM THE CENTER LINE OF THE TEE ALONG THE BRANCH FOR THE DISTANCE INDICATED. A MINIMUM OF 5 FEET OF RESTRAINED PIPE MUST BE INSTALLED ON BOTH RUNS OF THE TEE. MEGALUG TYPE RESTRAINERS ARE REQUIRED ON ALL JOINTS.

CREATED 02/24/03
REVISED

RESTRAINED JOINT TABLE TEES (BRANCH SIDE)

PASCO COUNTY UTILITIES

PROVIDED FOR INFORMATIONAL PURPOSES ONLY. NO MODIFICATIONS WITHOUT WRITTEN PCU APPROVAL

DETAIL 32

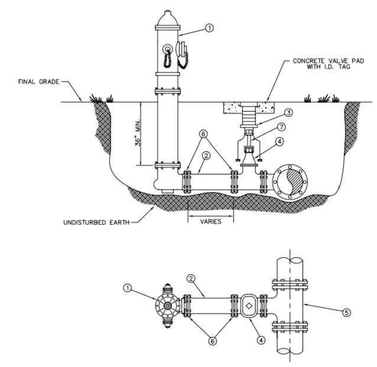

MATERIALS		
ITEM	QUANT.	DESCRIPTION
1	1	HYDRANT, FIRE (5 1/4" VALVE MIN.), PAINTED YELLOW
2	*	6" PIPE, P.V.C. (DR-18)
3	1	BOX, VALVE SLIP TYPE
4	1	6" VALVE, GATE, M.J. RESILIENT WEDGE
5	1	TEE, ANCHORING, M.J.
6	*	6" RESTRAINER GLAND (MEGALUG)
7	*	VALVE EXTENSION ROD, AS NECESSARY (3' MAX. BELOW GRADE)

CREATED 02/24/03
REVISED

FIRE HYDRANT PERPENDICULAR TO THE MAIN

PASCO COUNTY UTILITIES

PROVIDED FOR INFORMATIONAL PURPOSES ONLY. NO MODIFICATIONS WITHOUT WRITTEN PCU APPROVAL

DETAIL 27

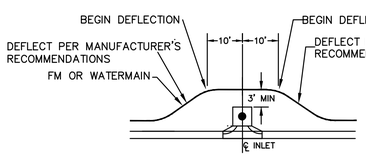

DETAIL "A"

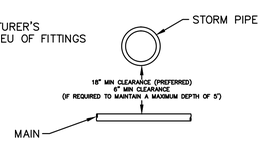

DETAIL "B"

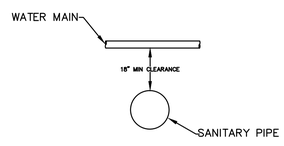

DETAIL "C"

ANGULAR DEFLECTION:

NOTE: NO DEFLECTION SHALL BE ALLOWED AT THE JOINT. PIPE CURVATURE SHOULD BE ACCOMPLISHED BY BENDING THE PIPE RATHER THAN DEFLECTING THE JOINTS. THE BENT PIPE IS ASSUMED TO FORM A TRUE ARC, I.E. THE PIPE IS CURVED UNIFORMLY THROUGHOUT ITS LENGTH AS FOLLOWS:

PIPE SIZE (INCHES)	MINIMUM ALLOWABLE RADIUS (FEET)
4	100*
6	150*
8	200*
10	250*
12	300*

*VERIFY WITH PIPE MANUFACTURER

POTABLE WATER/SANITARY SEWER CLEARANCE REQUIREMENTS

Vertical Clearance at Crossings:

Gravity sewers or force mains crossing under water mains shall be laid to provide a minimum vertical distance of 18 inches between the invert of the upper pipe and the crown of the lower pipe. The crossing shall be arranged so that the sewer joints and water joints will be equidistant from the point of crossing with no less than 10 feet between any two joints. Where the minimum 18-in. separation cannot be maintained, one of the following methods of protection shall be utilized:

a. the sewer shall be encased in concrete for 20 feet centered on the crossing (10-ft. linear separation between joints);
b. the sewer shall be installed as D.I.P. for 20 feet centered on the crossing (10-ft. linear separation between joints);
c. the sewer shall be designed and constructed to the same specifications as water pipe, and shall be pressure tested at 150 psi to assure water tightness prior to backfilling; or
d. either the water main or the sewer line may be encased in a watertight carrier pipe which extends 10 feet on both sides of the crossing, measured perpendicular to the water main. The carrier pipe shall be of materials approved by the Department for use in water main construction.

One of the above descibed methods shall also be utilized when there is no alternative to sewers crossing over water mains. In such instances, adequate structural support shall be provided for the sewer to maintain line and grade.

Horizontal Separation Between Parallel Lines:

Gravity sewers or force mains shall be installed at least 10 feet horizontally from any existing or proposed water main. The distance shall be measured edge to edge. In cases where it is not practical to maintain a 10-ft. separation, the water main shall be installed in a separate trench or on an undisturbed earth shelf located on one side of the sewer and at an elevation so that the bottom of the water main is at least 18 inches above the top of the sewer, and the water and sewer joints shall be staggered.

If it is impossible to obtain proper horizontal and vertical separation as described above, both the water main and sewer must be constructed of slip-on or mechanical joint pipe complying with public water supply design standards of the Florida Department of Environmental Protection and be pressure tested to 150 psi to assure watertightness before backfilling.

POTABLE WATER/STORM SEWER CLEARANCE REQUIREMENTS

PARALLEL INSTALLATION

Water mains shall be laid at least 10 feet horizontally from any existing or proposed storm sewer. The distance shall be measured edge to edge. In cases where it is not practical to maintain a 10-ft. separation the water main shall be installed in a separate trench or on an undisturbed earth shelf located on one side of the storm sewer and at an elevation so that the bottom of the water main is at least 18 inches above the top of the storm sewer.

CROSSINGS

Water mains crossing storm sewers shall be laid to provide a minimum vertical distance of 18 inches between the outside of the water main and the outside of the storm sewer. This shall be the case where the water main is either above or below the storm sewer. At crossings, one full length of water pipe shall be located so both joints will be as far from the storm as possible. Special structural support for the water and storm sewer pipes may be required.

STORM SEWER MANHOLES

No water pipe shall pass through or come in contact with any part of a storm sewer manhole.

STUART M. ROGERS LICENSE NO. 42718 STATE OF FLORIDA PROFESSIONAL ENGINEER

12-2-2014

JOB NO.	SCALE	DATE	DESIGNED	DRAWN	CHECKED	QC
0597-0025	137	8-8-2014		JD	AH	SR

NO.	DATE	REVISIONS	APP'D

DESIGNED FOR: EPPERSON RANCH, LLC
25502 NORTH ROCKY POINT DRIVE, SUITE 1050, TAMPA, FLORIDA 33607
PHONE: (813) 288-8078

PROJECT NAME: PARK PLACE ENTRANCE ROAD

SHEET NAME: UTILITY DETAILS

FLORIDA DESIGN CONSULTANTS, INC.
THINK IT. ACHIEVE IT.
707 N. FRANKLIN STREET, 6TH FLOOR, TAMPA, FLORIDA 34655
PHONE: (800) 532 - 1047 FAX: (727) 848 - 3648 WWW.FLDESIGN.COM C.A. NO. 7421

© Copyright: 2014 Florida Design Consultants, Inc. Drawings and concepts may not be used or reproduced without written permission.

K:\137\PROJDATA\Const\Docs\PLANS\EPPERSON RANCH BLVD\137_DTUT-1-ERB.dwg, Layout: 12/23/2014 3:48:20 PM, ahulbert

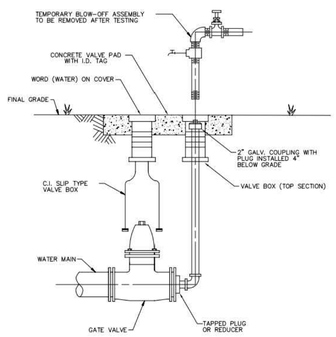

NOTES:
- MECHANICAL JOINTS/UNDERGROUND PIPING SHALL BE RESTRAINED AS SPECIFIED IN JOINT RESTRAINT TABLE (DETAIL 46)
- VALVE EXTENSION ROD SHALL BE UTILIZED, AS NECESSARY, SO THAT VALVE OPERATING NUT IS A MAXIMUM OF 3' BELOW GRADE.

CREATED 02/24/03	PERMANENT BLOW-OFF DETAIL	PROVIDED FOR INFORMATIONAL PURPOSES ONLY. NO MODIFICATIONS WITHOUT WRITTEN PCU APPROVAL
REVISED	PASCO COUNTY UTILITIES	DETAIL 28

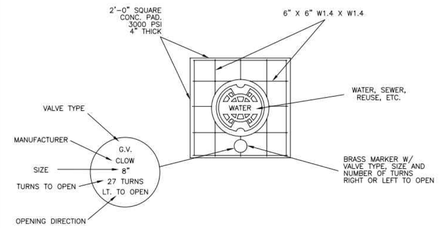

TYPICAL CONCRETE VALVE PAD

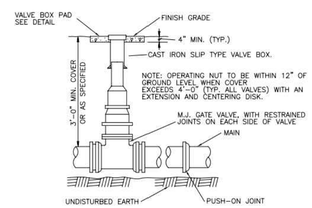

CREATED 02/24/03	VALVE BOX DETAIL SLIP TYPE	PROVIDED FOR INFORMATIONAL PURPOSES ONLY. NO MODIFICATIONS WITHOUT WRITTEN PCU APPROVAL
REVISED	PASCO COUNTY UTILITIES	DETAIL 30

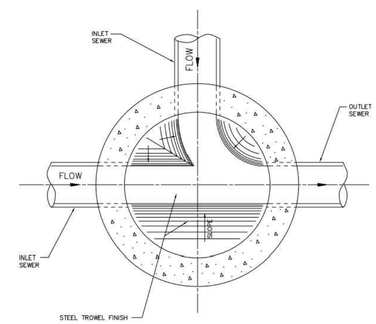

CREATED 02/24/03	STANDARD MANHOLE (BENCH AND INVERTS)	PROVIDED FOR INFORMATIONAL PURPOSES ONLY. NO MODIFICATIONS WITHOUT WRITTEN PCU APPROVAL
REVISED	PASCO COUNTY UTILITIES	DETAIL 39

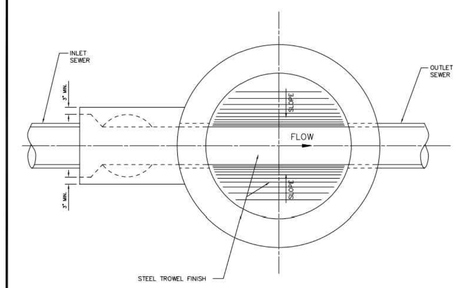

NOTE:
DROP MANHOLE TO BE USED WHEN THE DIFFERENCE BETWEEN INVERTS IS 2' OR MORE.

CREATED 02/24/03	DROP MANHOLE (BENCH AND INVERTS)	PROVIDED FOR INFORMATIONAL PURPOSES ONLY. NO MODIFICATIONS WITHOUT WRITTEN PCU APPROVAL
REVISED	PASCO COUNTY UTILITIES	DETAIL 40

NOTE:
PRECAST CONCRETE SHALL ATTAIN A MINIMUM COMPRESSIVE STRENGTH OF 4,000 p.s.i. AT 28 DAYS.

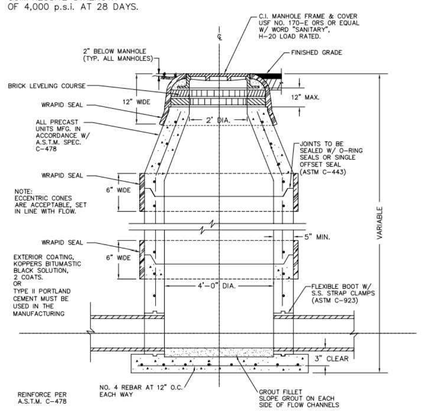

NOTE:
1. WRAPID SEAL MUST BE USED ON ALL JOINTS, CASTINGS AND RISER RINGS: ON ALL JOINTS ON AIR RELEASES, MANHOLES, GREASE/WATER, OIL/WATER SEPARATORS, AND WETWELLS.
2. WRAPID SEAL MUST BE USED IN ACCORDANCE WITH MANUFACTURES RECOMMENDATIONS.
3. PASCO COUNTY SHALL HAVE THE OPTION OF SPECIFYING THE TYPE OF INTERIOR LINING TO BE INSTALLED FOR EACH INDIVIDUAL MANHOLE.
4. PASCO COUNTY SHALL HAVE THE OPTION OF REQUIRING A NEGATIVE PRESSURE TEST PER ASTM C-1244
5. LIFT HOLES MUST NOT PENETRATE THE WALLS

CREATED 02/24/03	STANDARD MANHOLE	PROVIDED FOR INFORMATIONAL PURPOSES ONLY. NO MODIFICATIONS WITHOUT WRITTEN PCU APPROVAL
REVISED	PASCO COUNTY UTILITIES	DETAIL 41

NOTE:
ECCENTRIC CONES ARE ACCEPTABLE, SET IN LINE WITH FLOW.

EXTERIOR COATING, KOPPERS BITUMASTIC BLACK SOLUTION, 2 COATS. OR TYPE II PORTLAND CEMENT MUST BE USED IN THE MANUFACTURING PROCESS

NOTE:
PRECAST CONCRETE SHALL ATTAIN A MINIMUM COMPRESSIVE STRENGTH OF 4,000 p.s.i. AT 28 DAYS.

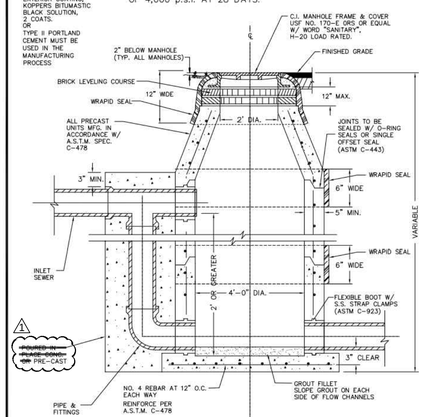

NOTE:
1. WRAPID SEAL MUST BE USED ON ALL JOINTS, CASTINGS AND RISER RINGS: ON ALL JOINTS ON AIR RELEASES, MANHOLES, GREASE/WATER, OIL/WATER SEPARATORS, AND WETWELLS.
2. WRAPID SEAL MUST BE USED IN ACCORDANCE WITH MANUFACTURES RECOMMENDATIONS.
3. PASCO COUNTY SHALL HAVE THE OPTION OF SPECIFYING THE TYPE OF INTERIOR LINING TO BE INSTALLED FOR EACH INDIVIDUAL MANHOLE.
4. PASCO COUNTY SHALL HAVE THE OPTION OF REQUIRING A NEGATIVE PRESSURE TEST PER ASTM C-1244
5. LIFT HOLES MUST NOT PENETRATE THE WALLS

CREATED 02/24/03	DROP MANHOLE	PROVIDED FOR INFORMATIONAL PURPOSES ONLY. NO MODIFICATIONS WITHOUT WRITTEN PCU APPROVAL
REVISED	PASCO COUNTY UTILITIES	DETAIL 42

NOTE:
PRECAST CONCRETE SHALL ATTAIN A MINIMUM COMPRESSIVE STRENGTH OF 4,000 p.s.i. AT 28 DAYS.

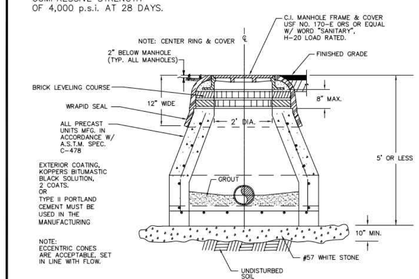

NOTE:
- A BEDDING OF CLASS I, CLASS II, OR CLASS III MATERIAL SHALL BE REQUIRED WHEN THE MANHOLE BOTTOM CANNOT BE INSTALLED ON UNDISTURBED SOIL OR IF THE NATIVE SOIL IS CLASS IV OR CLASS V MATERIAL.
- THIS TYPE OF CONSTRUCTION SHALL BE LIMITED TO DEPTHS OF (0-5) FEET.
- EXTERIOR COATING SHALL BE KOPPERS BITUMASTIC BLACK SOLUTION, 2 COATS.
- WRAPID SEAL MUST BE USED ON ALL JOINTS, CASTINGS AND RISER RINGS. WRAPID SEAL MUST BE USED IN ACCORDANCE WITH MANUFACTURER'S RECOMMENDATIONS.
- PASCO COUNTY SHALL HAVE THE OPTION OF SPECIFYING THE TYPE OF INTERIOR LINING TO BE INSTALLED FOR EACH INDIVIDUAL MANHOLE.
- PASCO COUNTY SHALL HAVE THE OPTION OF REQUIRING A NEGATIVE PRESSURE TEST PER ASTM C-1244
- LIFT HOLES MUST NOT PENETRATE THE WALLS

CREATED 02/24/03	MANHOLE SHALLOW CONSTRUCTION (CLOSED BOTTOM)	PROVIDED FOR INFORMATIONAL PURPOSES ONLY. NO MODIFICATIONS WITHOUT WRITTEN PCU APPROVAL
REVISED	PASCO COUNTY UTILITIES	DETAIL 43

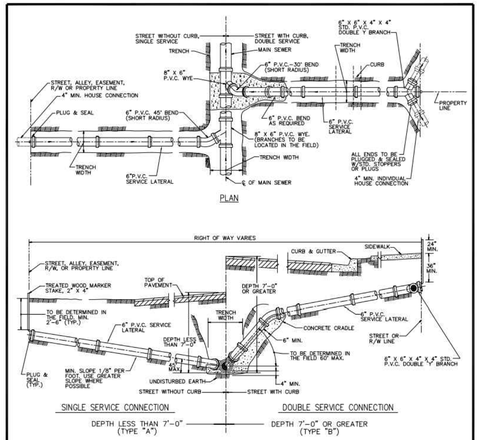

NOTE:
- CONTRACTOR SHALL MAKE, ON A CLEAN SET OF PLANS, THE FINAL STATIONING OR DISTANCE AND DIRECTION FROM MANHOLE OF EACH SERVICE LATERAL AND THEN GIVE TO ENGINEER FOR RECORD PURPOSES.
- PROVIDE 2" x 4" PRESSURE TREATED WOOD MARKER STAKE AT ALL SANITARY SERVICES (INCLUDE IN PIPE PRICE). TOP OF STAKE TO BE PAINTED WITH GREEN PAINT.
- THE MINIMUM DIAMETER OF ALL SERVICE LATERALS SHALL BE 6 INCHES.

CREATED 02/24/03	SEWER LATERAL CONNECTION	PROVIDED FOR INFORMATIONAL PURPOSES ONLY. NO MODIFICATIONS WITHOUT WRITTEN PCU APPROVAL
REVISED	PASCO COUNTY UTILITIES	DETAIL 44

STUART M. ROGERS
LICENSE NO. 42718
STATE OF FLORIDA
PROFESSIONAL ENGINEER

12-2-2014

JOB NO.	SHEET	DATE	DESIGNED	DRAWN	CHECKED	QC
0597-0025	137	8-8-2014	JD	AH	SR	

NO.	DATE	REVISIONS	APP'D
1	11-6-14	PASCO COUNTY COMMENTS	

DESIGNED FOR
EPPERSON RANCH, LLC
2502 NORTH ROCKY POINT DRIVE, SUITE 1050, TAMPA, FLORIDA 33607
PHONE: (813) 288-8078

PROJECT NAME
PARK PLACE ENTRANCE ROAD

SHEET NAME
UTILITY DETAILS

FLORIDA DESIGN CONSULTANTS, INC.
THINK IT. ACHIEVE IT.
707 N. FRANKLIN STREET, 6TH FLOOR, TAMPA, FLORIDA 34655
PHONE: (800) 532 - 1047 FAX: (727) 848 - 3648 WWW.FLDESIGN.COM C.A. NO. 7421

©Copyright 2014 Florida Design Consultants, Inc. Drawings and concepts may not be used or reproduced without written permission.

K:\137\PROJDATA\ConstDocs\PLANS\EPPERSON RANCH BLVD\137_DTUT-2-ERB.dwg - Layout: 12/23/2014 3:48:30 PM, ahulbert

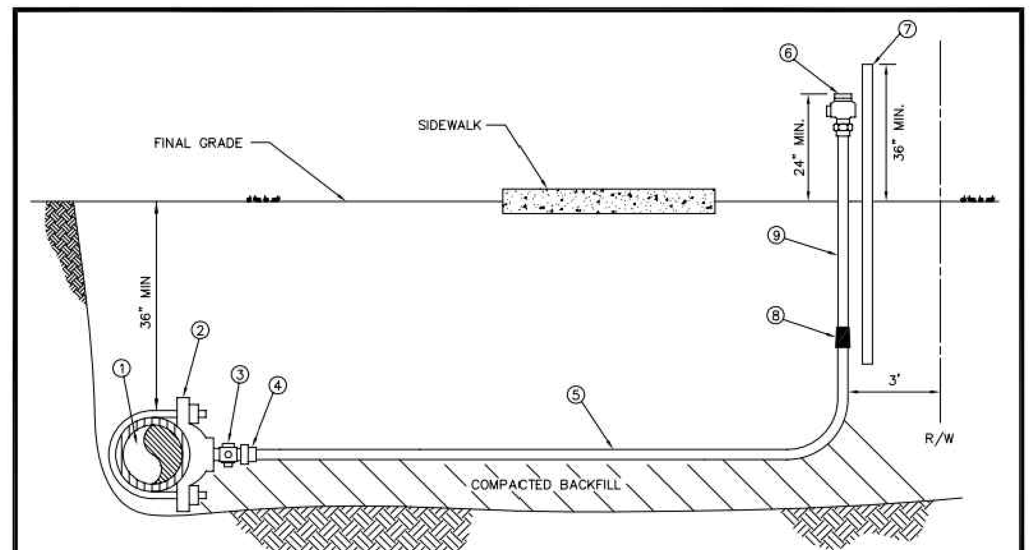

MATERIALS		
ITEM	QUANT.	DESCRIPTION
1	*	PIPE, PVC (DR-18) OR D.I.P.
2	1	SADDLE, SERVICE W/ 1" F.I.P. THREAD
3	1	1" CORPORATION (M.I.P. x COMP.)
4	1	1" INSERT (STAINLESS STEEL)
5	*	1" TUBING, POLYETHYLENE
6	1	3/4" WATER OR 1" REUSE CURB STOP BALL
		VALVE W/ LOCK WINGS (F.I.P. x COMP.)
7	1	2" x 4" P.T. MARKER STAKE
8	1	1" x 3/4" COUPLING (COMP. x COMP.) WATER ONLY
9	1	3/4" WATER OR 1" REUSE TUBING, POLYETHYLENE 4'

NOTES:
- ALL FITTINGS FOR POLYETHYLENE TUBING ARE BRASS COMPRESSION TYPE.
- A VALVE BOX MAY BE REQUIRED AS SPECIFIED BY THE ENGINEER.
- CURB STOP TO TERMINATE 24" ABOVE GROUND AT R/W LINE.
- REUSE CURB STOPS = 1" / WATER CURB STOPS = 3/4"
- TUBING TO BE YARDLEY 3406 OR EQUAL.
- SADDLES 2" – 3" TO BE BRASS FULL CIRCLE TYPE.
- SADDLES 4" AND LARGER TO BE D.I. DUAL STRAP TYPE.
- CURB STOPS TO BE TIED TO MARKER STAKE.
- SADDLE MAY BE INSTALLED AT ANGLE (WITHIN 45° OF HORIZONTAL).
- MARKER STAKES PAINTED SAFETY BLUE FOR WATER, PURPLE FOR REUSE.

CREATED 02/24/03 REVISED	SINGLE NEAR SIDE WATER SERVICE – 3/4" SINGLE NEAR SIDE REUSE SERVICE – 1" POLYETHYLENE TUBING	PROVIDED FOR INFORMATIONAL PURPOSES ONLY. NO MODIFICATIONS WITHOUT WRITTEN PCU APPROVAL
	PASCO COUNTY UTILITIES	DETAIL 17

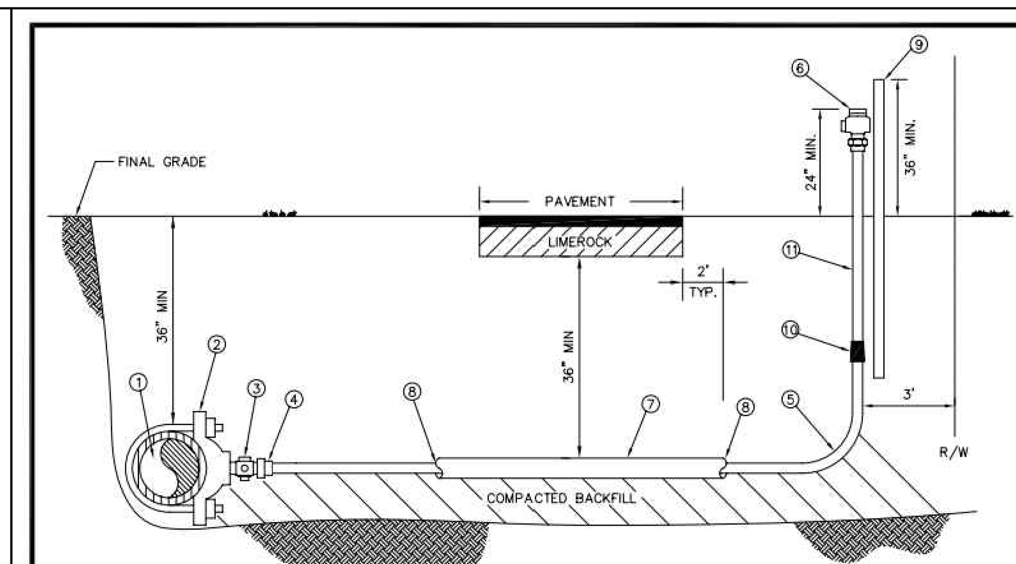

MATERIALS		
ITEM	QUANT.	DESCRIPTION
1	*	PIPE, PVC (DR-18) OR D.I.P.
2	1	SADDLE, SERVICE W/ 1" F.I.P. THREAD
3	1	1" CORPORATION (M.I.P. x COMP.)
4	1	1" INSERT (STAINLESS STEEL)
5	*	1" TUBING, POLYETHYLENE
6	1	3/4" WATER OR 1" REUSE CURB STOP BALL
		VALVE W/ LOCK WINGS (F.I.P. x COMP.)
7	*	2" CASING, PVC OR HDPE – 2' BEYOND EDGE PAVEMENT
8	*	SEALER, RAM-NEK
9	1	2" x 4" P.T. MARKER STAKE
10	1	1" x 3/4" COUPLING (COMP. x COMP.) WATER ONLY
11	1	3/4" WATER OR 1" REUSE TUBING, POLYETHYLENE 4'

NOTES:
- ALL FITTINGS FOR POLYETHYLENE TUBING ARE BRASS COMPRESSION TYPE.
- A VALVE BOX MAY BE REQUIRED AS SPECIFIED BY THE ENGINEER.
- CURB STOP TO TERMINATE 24" ABOVE GROUND AT R/W LINE.
- REUSE CURB STOPS = 1" / WATER CURB STOPS = 3/4"
- TUBING TO BE YARDLEY 3406 OR EQUAL.
- SADDLES 2" – 3" TO BE BRASS FULL CIRCLE TYPE.
- SADDLES 4" AND LARGER TO BE D.I. DUAL STRAP TYPE.
- CURB STOPS TO BE TIED TO MARKER STAKE.
- SADDLE MAY BE INSTALLED AT ANGLE (WITHIN 45° OF HORIZONTAL).
- MARKER STAKES PAINTED SAFETY BLUE FOR WATER, PURPLE FOR REUSE.

CREATED 02/24/03 REVISED	SINGLE FAR SIDE WATER SERVICE – 3/4" SINGLE FAR SIDE REUSE SERVICE – 1" POLYETHYLENE TUBING	PROVIDED FOR INFORMATIONAL PURPOSES ONLY. NO MODIFICATIONS WITHOUT WRITTEN PCU APPROVAL
	PASCO COUNTY UTILITIES	DETAIL 18

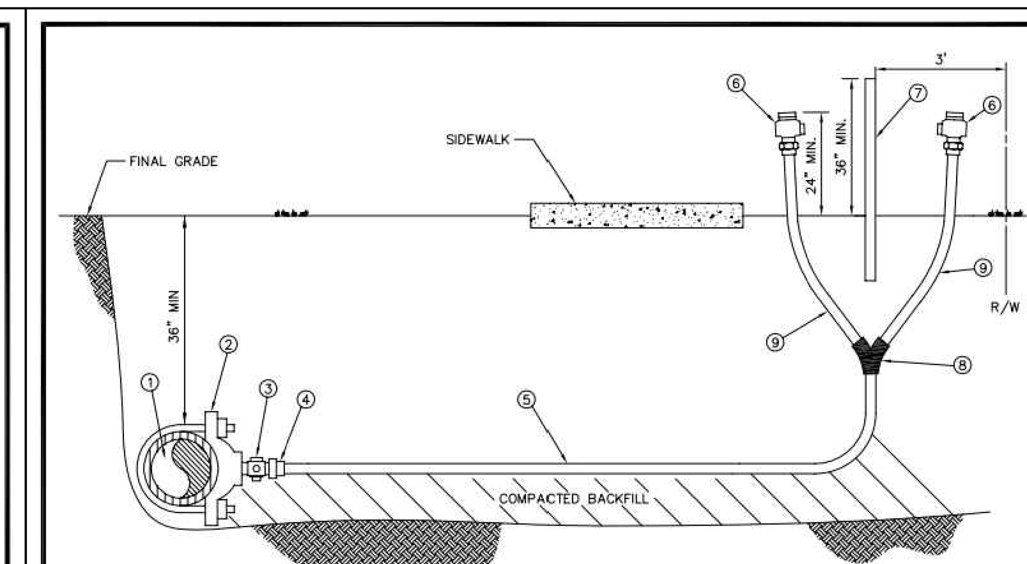

MATERIALS		
ITEM	QUANT.	DESCRIPTION
1	*	PIPE, PVC (DR-18) OR D.I.P.
2	1	SADDLE, SERVICE W/ 1" F.I.P. THREAD
3	1	1" CORPORATION (M.I.P. x COMP.)
4	1	1" INSERT (STAINLESS STEEL)
5	*	1" TUBING, POLYETHYLENE
6	1	3/4" WATER OR 1" REUSE CURB STOP BALL
		VALVE W/ LOCK WINGS (F.I.P. x COMP.)
7	1	2" x 4" P.T. MARKER STAKE
8	1	1" x 3/4" WYE BRANCH (COMP. x COMP.) WATER ONLY
		1" x 1" WYE BRANCH (COMP. x COMP.) REUSE ONLY
9	1	3/4" WATER OR 1" REUSE TUBING, POLYETHYLENE 4'

NOTES:
- ALL FITTINGS FOR POLYETHYLENE TUBING ARE BRASS COMPRESSION TYPE.
- A VALVE BOX MAY BE REQUIRED AS SPECIFIED BY THE ENGINEER.
- CURB STOP TO TERMINATE 24" ABOVE GROUND AT R/W LINE.
- REUSE CURB STOPS = 1" / WATER CURB STOPS = 3/4"
- TUBING TO BE YARDLEY 3406 OR EQUAL.
- SADDLES 2" – 3" TO BE BRASS FULL CIRCLE TYPE.
- SADDLES 4" AND LARGER TO BE D.I. DUAL STRAP TYPE.
- CURB STOPS TO BE TIED TO MARKER STAKE.
- SADDLE MAY BE INSTALLED AT ANGLE (WITHIN 45° OF HORIZONTAL).
- MARKER STAKES PAINTED SAFETY BLUE FOR WATER, PURPLE FOR REUSE.

CREATED 02/24/03 REVISED	DOUBLE NEAR SIDE WATER SERVICE – 3/4" DOUBLE NEAR SIDE REUSE SERVICE – 1" POLYETHYLENE TUBING	PROVIDED FOR INFORMATIONAL PURPOSES ONLY. NO MODIFICATIONS WITHOUT WRITTEN PCU APPROVAL
	PASCO COUNTY UTILITIES	DETAIL 19

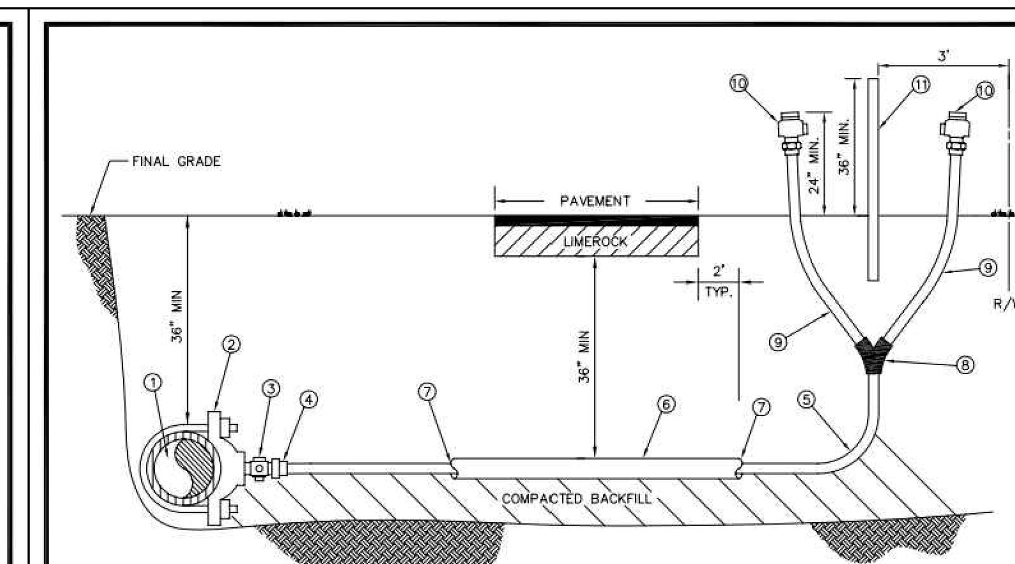

MATERIALS		
ITEM	QUANT.	DESCRIPTION
1	*	PIPE, PVC (DR-18) OR D.I.P.
2	1	SADDLE, SERVICE W/ 1" F.I.P. THREAD
3	1	1" CORPORATION (M.I.P. x COMP.)
4	1	1" INSERT (STAINLESS STEEL)
5	*	1" TUBING, POLYETHYLENE
6	*	2" CASING, PVC OR HDPE – 2' BEYOND EDGE PAVEMENT
7	*	SEALER, RAM-NEK
8	1	WYE BRANCH FOR POLY TUBING
9	2	3/4" WATER OR 1" REUSE TUBING, POLYETHYLENE 4'
10	2	3/4" WATER OR 1" REUSE CURB STOP BALL
		VALVE W/ LOCK WINGS (F.I.P. x COMP.)
11	1	2" x 4" P.T. MARKER STAKE

NOTES:
- ALL FITTINGS FOR POLYETHYLENE TUBING ARE BRASS COMPRESSION TYPE.
- A VALVE BOX MAY BE REQUIRED AS SPECIFIED BY THE ENGINEER.
- CURB STOP TO TERMINATE 24" ABOVE GROUND AT R/W LINE.
- REUSE CURB STOPS = 1" / WATER CURB STOPS = 3/4"
- TUBING TO BE YARDLEY 3406 OR EQUAL.
- SADDLES 2" – 3" TO BE BRASS FULL CIRCLE TYPE.
- SADDLES 4" AND LARGER TO BE D.I. DUAL STRAP TYPE.
- CURB STOPS TO BE TIED TO MARKER STAKE.
- SADDLE MAY BE INSTALLED AT ANGLE (WITHIN 45° OF HORIZONTAL).
- MARKER STAKES PAINTED SAFETY BLUE FOR WATER, PURPLE FOR REUSE.

CREATED 02/24/03 REVISED	WATER AND REUSE LATERAL SERVICE 3/4" (DOUBLE – FAR SIDE) POLYETHYLENE TUBING	PROVIDED FOR INFORMATIONAL PURPOSES ONLY. NO MODIFICATIONS WITHOUT WRITTEN PCU APPROVAL
	PASCO COUNTY UTILITIES	DETAIL 20

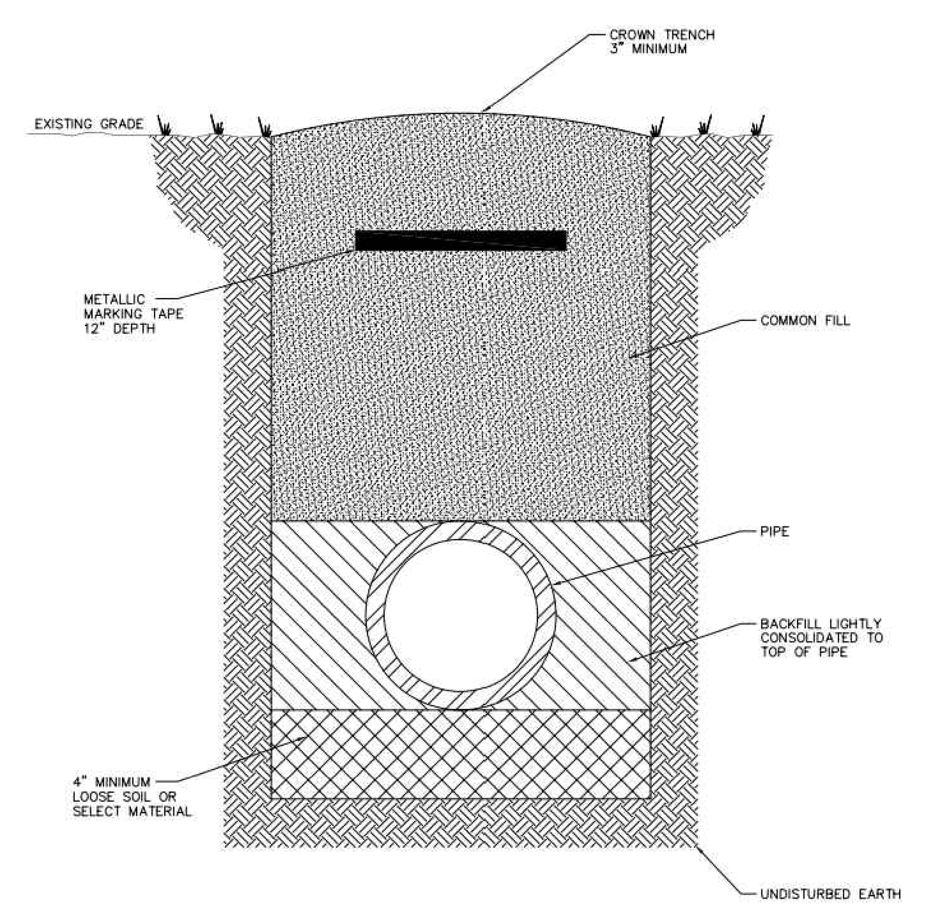

NOTES:
- LOOSE SOIL OR SELECT MATERIAL IS NATIVE SOIL EXCAVATED FROM THE TRENCH FREE OF ROCKS AND FOREIGN MATERIAL.
- COMMON FILL TO BE PLACED AND COMPACTED IN 12" LAYERS. ROLLING EQUIPMENT SHALL NOT BE USED FOR COMPACTION UNTIL A MINIMUM OF 18" OF COMMON FILL HAS BEEN PLACED AND COMPACTED OVER THE PIPE. THREE FEET OF FILL SHALL BE PLACED BEFORE A HYDROHAMMER MAY BE USED FOR COMPACTION.

NTS

CREATED 02/24/03 REVISED	PIPE LAYING CONDITIONS STANDARD UNPAVED AREAS	PROVIDED FOR INFORMATIONAL PURPOSES ONLY. NO MODIFICATIONS WITHOUT WRITTEN PCU APPROVAL
	PASCO COUNTY UTILITIES	DETAIL 35

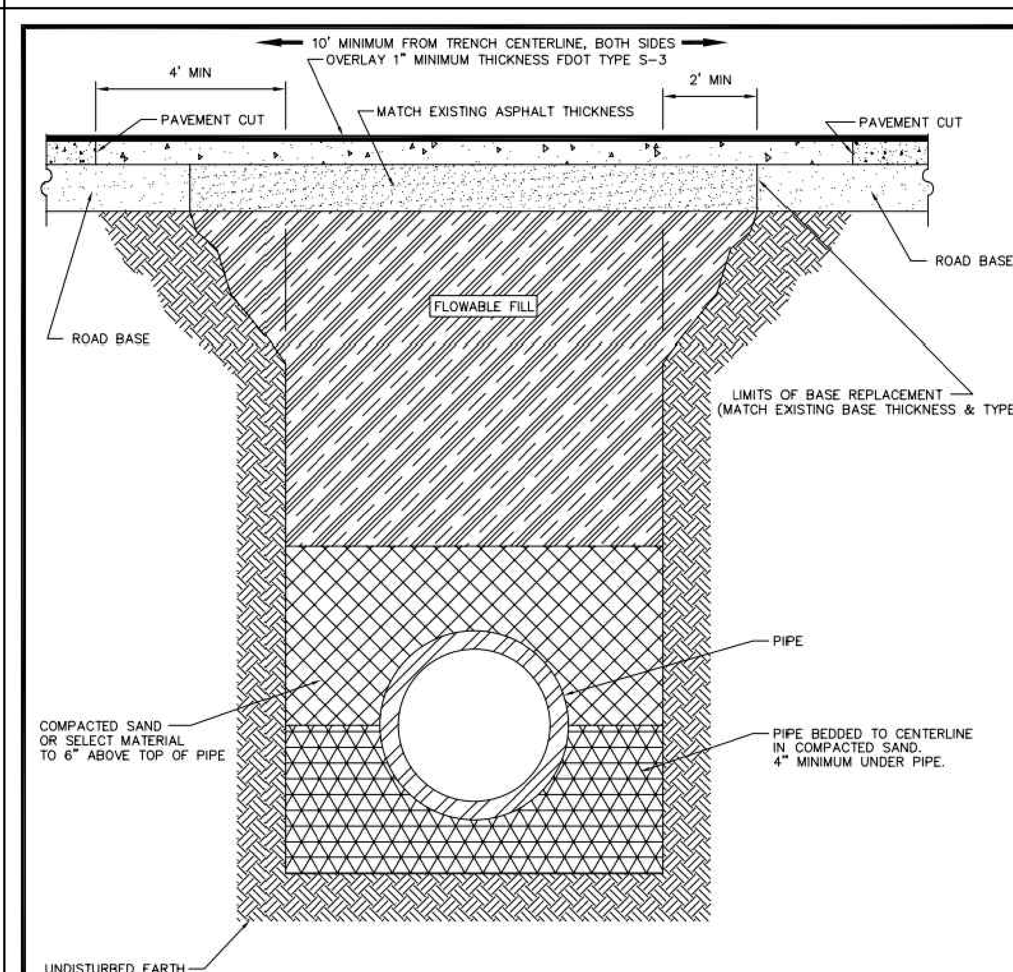

NOTE:
- SELECT MATERIAL IS NATIVE SOIL EXCAVATED FROM THE TRENCH FREE OF ROCKS AND FOREIGN MATERIAL.
- COMPACTION TO TOP OF PILE IS TO BE APPROXIMATELY 90% STANDARD PROCTOR, AASHTO T-99.
- EXISTING CONCRETE/ASPHALT PAVEMENT SURFACE AND BASE TO BE CUT SQUARE WITH CONCRETE SAW.

NTS

CREATED 03/06/03 REVISED	PIPE LAYING CONDITIONS FLOWABLE FILL BACKFILL STANDARD EXISTING PAVED AREAS & ROADWAYS	PROVIDED FOR INFORMATIONAL PURPOSES ONLY. NO MODIFICATIONS WITHOUT WRITTEN PCU APPROVAL
	PASCO COUNTY UTILITIES	DETAIL 36

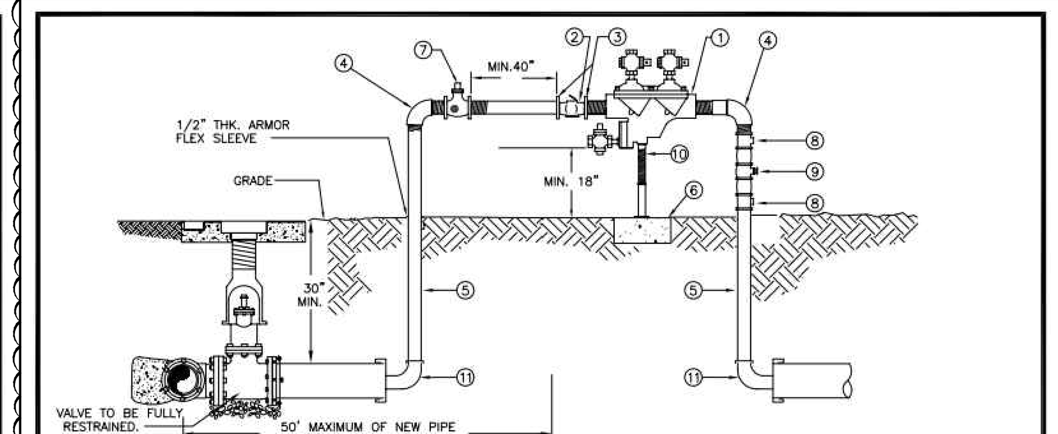

MATERIALS		
ITEM	QUANT.	DESCRIPTION
1	1	2" BACKFLOW PREVENTER ASSEMBLY, REDUCED PRESSURE ZONE
2	1	2" METER FURNISHED BY PASCO COUNTY UTILITIES
3	2	BRASS-METER FLANGES OR ADAPTORS
4	2	2" ELBOWS – GALV. 90°
5	2	2" RISER – GALV.
6	*	CONCRETE SLAB
7	1	2" VALVE – BRASS OR S.S.
8	2	TEE/ VALVES – BRASS OR S.S.
9	1	2" GATE VALVE – BRASS OR S.S.
10	1	PIPE STAND (SUPPORT)
11	2	M.J. CAP WITH 2" TAP

NOTE:
- CONTRACTOR/CUSTOMER SHALL APPLY AT PASCO COUNTY UTILITIES CUSTOMER SERVICE FOR TEMPORARY WATER SERVICE AT LEAST THREE DAYS PRIOR TO REQUIRED SERVICE DATE.
- THE METER WILL BE FURNISHED, INSTALLED AND INITIAL READING TAKEN BY PASCO COUNTY UTILITIES. ALL FITTINGS, PIPING, VALVES AND MATERIALS INCLUDING THE PASCO COUNTY APPROVED REDUCED PRESSURE BACKFLOW PREVENTION DEVICE SHALL BE FURNISHED AND INSTALLED BY THE CONTRACTOR/CUSTOMER.
- CONTRACTOR/CUSTOMER FURNISHED REDUCED PRESSURE BACKFLOW PREVENTION DEVICE MUST BE INSTALLED BEFORE THE METER IS INSTALLED BY PASCO COUNTY UTILITIES. THE APPROVED BACKFLOW PREVENTION DEVICE SHALL BE TESTED AND CERTIFIED BY PASCO COUNTY UTILITIES CERTIFIED BACKFLOW PREVENTION TECHNICIAN AT TIME OF METER INSTALLATION.
- CONTRACTOR/CUSTOMER SHALL PROTECT THE JUMPER/METER ASSEMBLY FROM DAMAGE.
- CONTRACTOR/CUSTOMER IS RESPONSIBLE FOR BACTERIOLOGICAL TESTING AFTER CONNECTION OF TEMPORARY WATER SERVICE.
- TEMPORARY CONSTRUCTION JUMPER/METER ASSEMBLY SHALL NOT BE REMOVED UNTIL SYSTEM IS ACCEPTED AND DEPARTMENT OF HEALTH CERTIFICATION AND CLEARANCE FOR SERVICE FORM HAS BEEN RECEIVED BY PASCO COUNTY UTILITIES.
- WHEN THE NEW SYSTEM IS ACCEPTED AND THE FINAL METER READING TAKEN BY PASCO COUNTY, THE TEMPORARY CONSTRUCTION JUMPER/METER ASSEMBLY MUST BE COMPLETELY REMOVED FROM M.J CAP TO M.J. CAP AND A NEW WATER MAIN IS TO BE CHLORINATED AND INSTALLED COMPLETING THE FINAL CONNECTION.
- BY APPLYING FOR SERVICE, CONTRACTOR/CUSTOMER AGREES TO TAKE WATER SERVICE FROM PASCO COUNTY UTILITIES IN ACCORDANCE WITH THE APPROPRIATE RATE SCHEDULE AND IN ACCORDANCE WITH PASCO COUNTY UTILITIES RULES AND REGULATION.

CREATED 11/18/05 REVISED	TEMPORARY CONSTRUCTION WATER SERVICE	PROVIDED FOR INFORMATIONAL PURPOSES ONLY. NO MODIFICATIONS WITHOUT WRITTEN PCU APPROVAL
	PASCO COUNTY UTILITIES	DETAIL 01

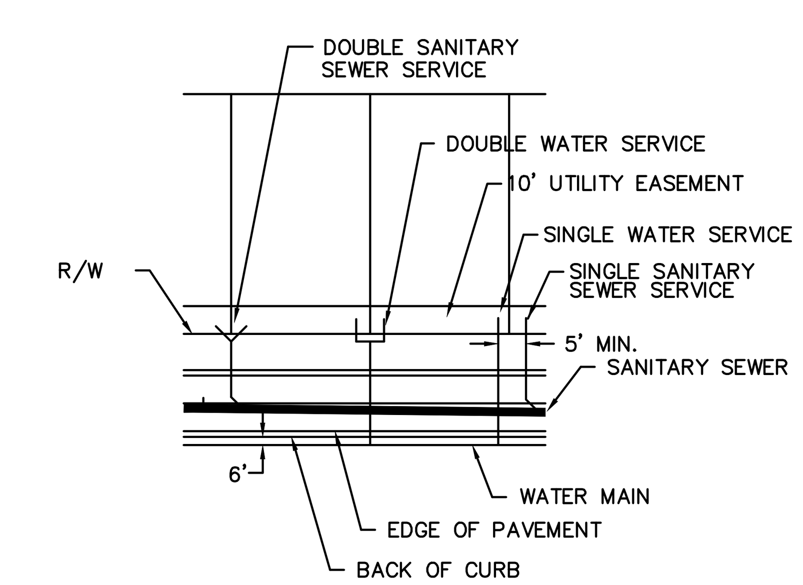

TYPICAL UTILITY SERVICES

N.T.S.

STUART M. ROGERS LICENSE NO. 42718 STATE OF FLORIDA PROFESSIONAL ENGINEER

12-2-2014

JOB NO.	EPN	DATE	DESIGNED	DRAWN	CHECKED	Q.C.
0597-0025	137	8-8-2014	JD	AH	SR	

NO.	DATE	REVISIONS	APP'D BY
1	11-6-14	PASCO COUNTY COMMENTS	

DESIGNED FOR: **EPPERSON RANCH, LLC**
2502 NORTH ROCKY POINT DRIVE, SUITE 1050, TAMPA, FLORIDA 33607
PHONE: (813) 288-8078

PROJECT NAME: **PARK PLACE ENTRANCE ROAD**

SHEET NAME: **UTILITY DETAILS**

FLORIDA DESIGN CONSULTANTS, INC.
THINK IT. ACHIEVE IT.
707 N. FRANKLIN STREET, 6TH FLOOR, TAMPA, FLORIDA 34655
PHONE: (800) 532-1047 FAX: (727) 848-3648 WWW.FLDESIGN.COM C.A. NO. 7421

©Copyright 2014 Florida Design Consultants, Inc. Drawings and concepts may not be used or reproduced without written permission.

K:\137\PROJDATA\ConstDocs\PLANS\EPPERSON RANCH BLVD\137_DTUT-3-ERB.dwg – Dec 23, 2014 @ 3:48pm – ahulbert
K:\137\PROJDATA\ConstDocs\PLANS\EPPERSON RANCH BLVD\137_DTUT-3-ERB.dwg, Layout1, 12/23/2014 3:48:40 PM, ahulbert

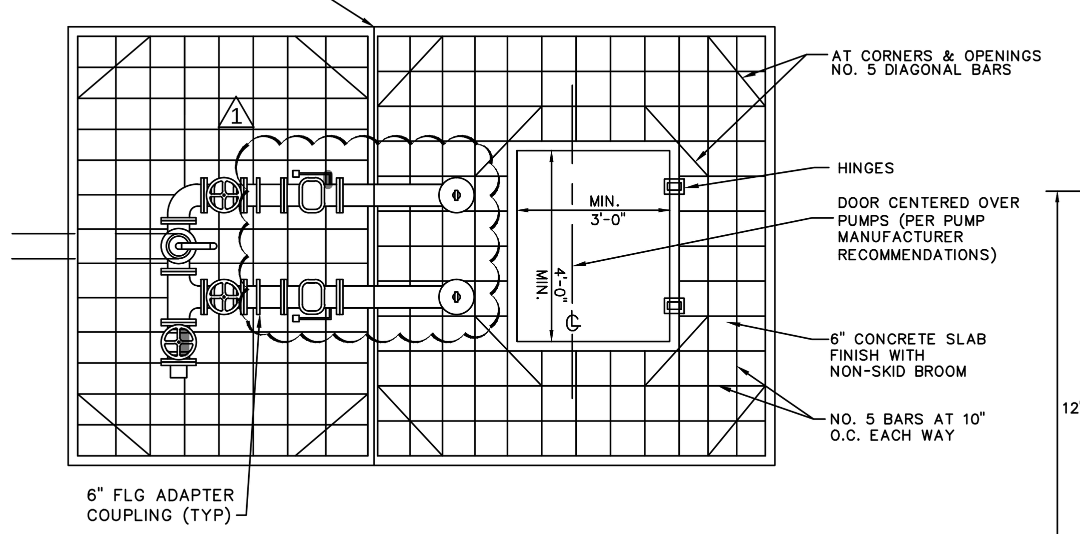

LIFT STATION & PIPING SLAB PLAN VIEW

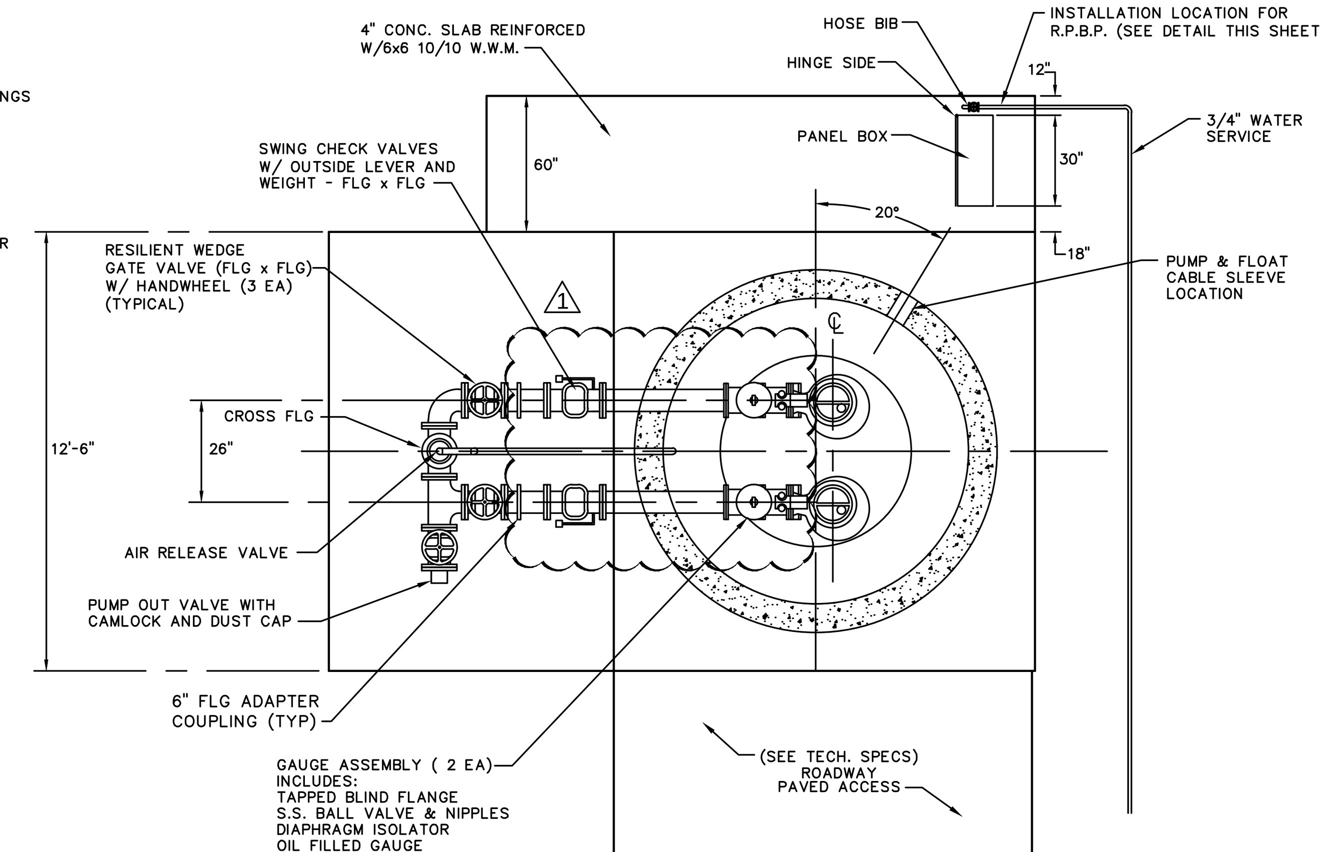

PUMP STATION SLAB & PIPING PLAN
PASCO COUNTY UTILITIES

PLAN VIEW
LIFT STATION & PIPING

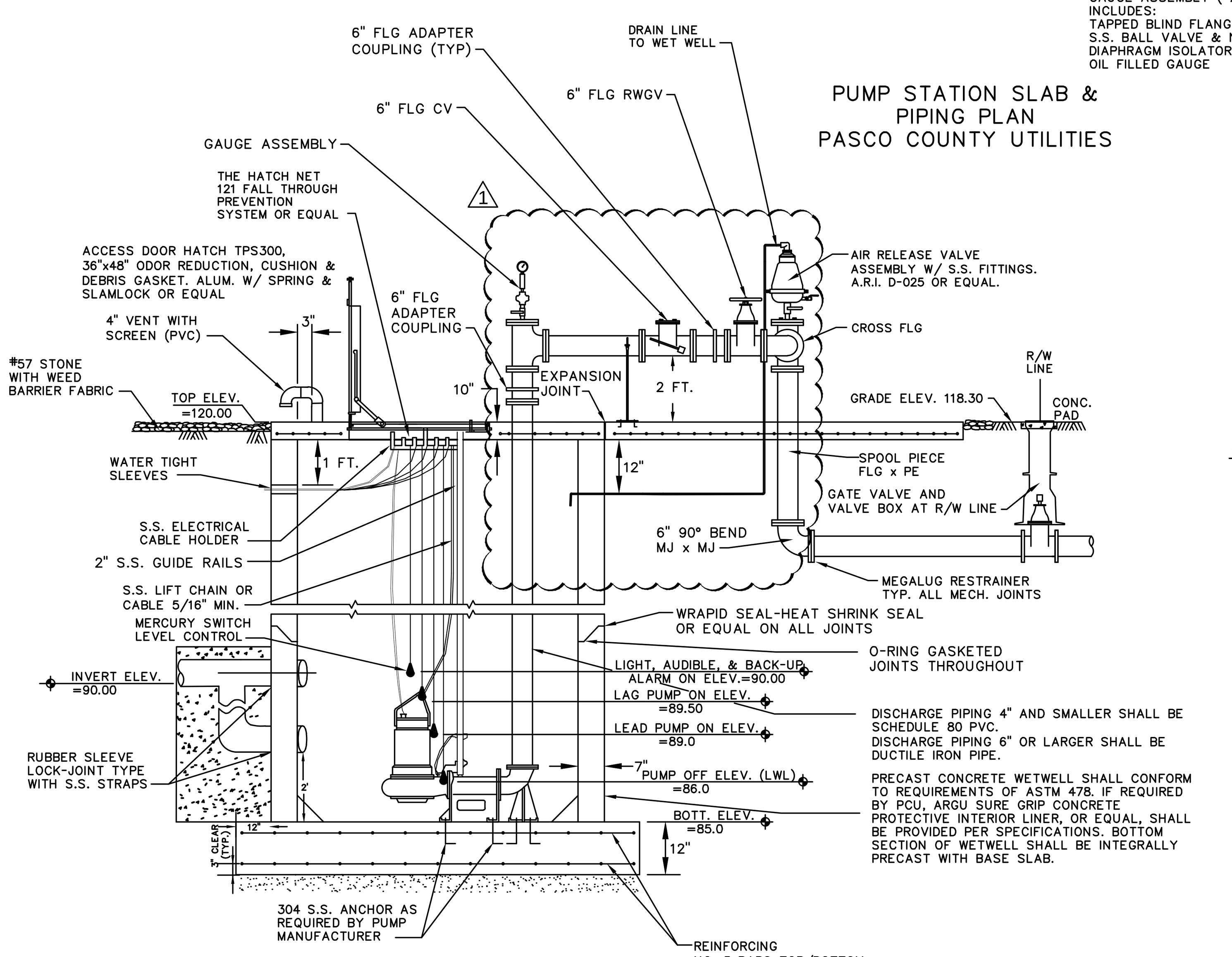

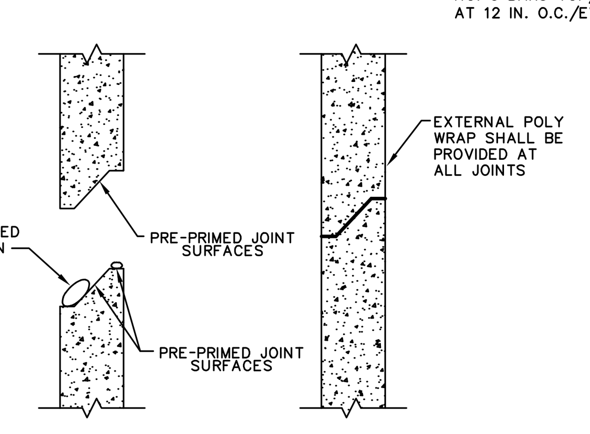

PRECAST JOINT DETAIL

TYPICAL LIFT STATION ELEVATION & PIPING
PASCO COUNTY UTILITIES

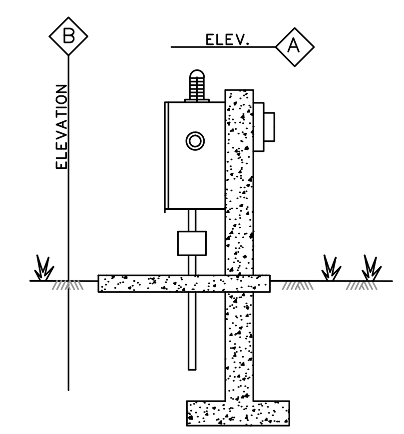

PANEL BOX ELEV.

NOTE:

1. POSITION PANEL BOX SO OPERATOR'S BACK IS NOT TO WET WELL WHILE FACING BOX.
2. PANEL BOX SHALL BE LOCATED TO ALLOW UNOBSTRUCTED ACCESS TO WET WELL BY PAVED ACCESS ROAD.
3. PANEL ELEVATION SHALL BE ABOVE 100-YEAR FLOOD ELEV. AND MUST BE SHOWN ON ALL PLANS.
4. DUPLEXOR SHALL BE AN T.T.I. 6012 ANY ALTERNATE TYPE MUST BE SPECIFICALLY APPROVED BY PASCO COUNTY.

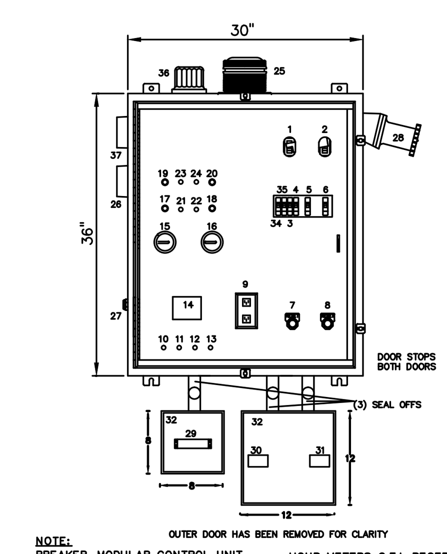

1 – MAIN BREAKER
2 – EMERGENCY BREAKER
3 – RECEPTACLE BREAKER
4 – CONTROL BREAKER
5 – MB1 MOTOR BREAKER 1
6 – MB2 MOTOR BREAKER 2
7 – OVERLOAD 1 RESET
8 – OVERLOAD 2 RESET
9 – DUPLEX RECEPTACLE (GFI)
10 – FTS1 FLOAT TEST SWITCH 1
11 – FTS2 FLOAT TEST SWITCH 2
12 – FTS3 FLOAT TEST SWITCH 3
13 – FTS4 FLOAT TEST SWITCH 4
14 – DUPLEXOR – (SEE NOTE BELOW)
15 – ELAPSE TIME METER 1
16 – ELAPSE TIME METER 2
17 – PL1 OVERTEMP 1
18 – PL2 OVERTEMP 2
19 – PL3 MOISTURE 1
20 – PL4 MOISTURE 2
21 – OVERTEMP 1 TEST BUTTON
22 – OVERTEMP 2 TEST BUTTON
23 – MOISTURE 1 TEST BUTTON
24 – MOISTURE 2 TEST BUTTON
25 – AL ALARM LIGHT (DC)
26 – AH ALARM HORN (DC)
27 – ASB ALARM SILENCE BUTTON
28 – GR GENERATOR RECEPTACLE
29 – FLOAT TERMINAL STRIP
30 – PUMP 1 POWER TERMINAL BLOCK
31 – PUMP 2 POWER TERMINAL BLOCK
32 – (2) JUNCTION BOXES
33 – LA LIGHTNING ARRESTOR
34 – SPARE CIRCUIT BREAKER
35 – ACB DC ALARM CIRCUIT BREAKER
36 – AL ALARM LIGHT (AC)
37 – ALARM HORN (AC)

NOTE:
BREAKER, MODULAR CONTROL UNIT & RESETS MOUNTED FOR OPERATION THROUGH INNER SAFETY DOOR
HOUR METERS G.F.I. RECEPTACLE SHALL BE MOUNTED ON INNER SAFETY DOOR
SEE TECHNICAL SPECIFICATION FOR DETAILS

PANEL BOX COMPONENT LAY-OUT

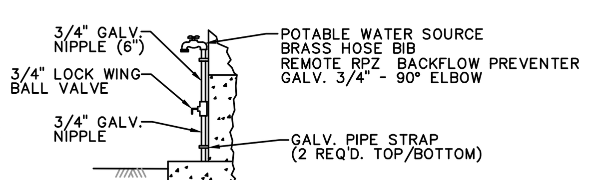

HOSE BIB DETAIL

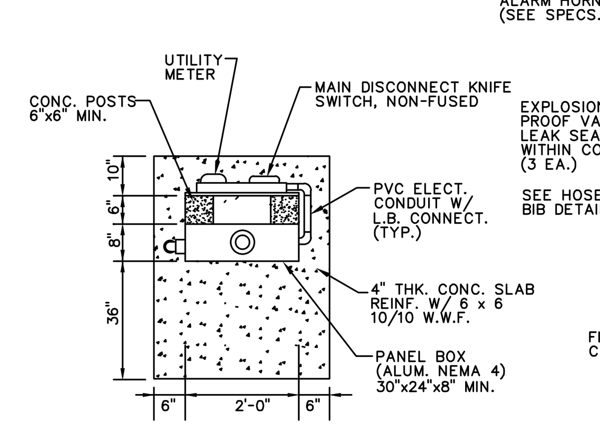

ELEVATION A

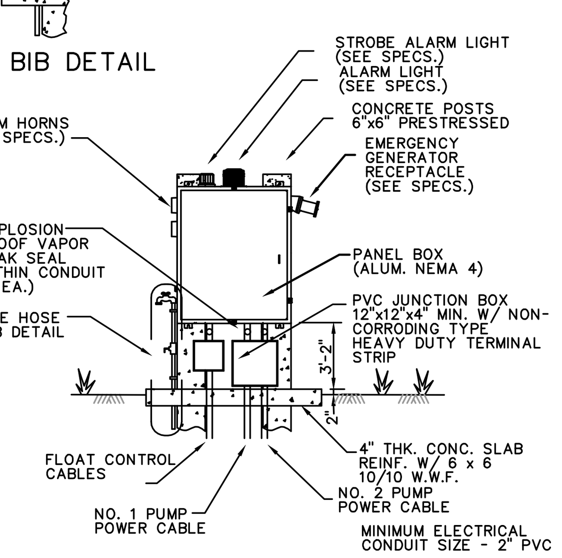

ELEVATION B

PHASE MONITOR:
A PHASE-LOSS/IMBALANCE/REVERSAL, UNDER VOLTAGE PROTECTION ASSEMBLY SHALL BE FURNISHED WITH ADJUSTABLE NOMINAL VOLTAGE SETTINGS AND THREE LINE VOLTAGE FUSES. THIS DEVICE SHALL DROP-OUT PUMPS IF ALL PHASES DROP BELOW 90% OR IF ONE PHASE DROPS BELOW 80-83% NOMINAL VOLTAGE. THIS DEVICE SHALL HAVE A 1/2 SECOND DROPOUT DELAY.

LIGHTNING ARRESTOR:
A LIGHTNING ARRESTOR SHALL BE SUPPLIED IN THE CONTROL PANEL AND CONNECTED TO EACH LINE OF THE INCOMING SIDE OF THE POWER INPUT TERMINALS. THE ARRESTOR SHALL PROTECT THE CONTROLS AGAINST DAMAGE DUE TO LIGHTNING STRIKES ON THE INCOMING POWER LINE.

STANDARD PUMP STATION (DUPLEX)
PANEL BOX ELEVATION &
COMPONENT LAY-OUT

PASCO COUNTY UTILITIES

DESIGN DATA

FLOW
UNITS 371 PHASE 1 SINGLE FAMILY UNITS
UNITS 131 PHASE 3 SINGLE FAMILY UNITS
UNITS 180 PHASE 4 SINGLE FAMILY UNITS
CRYSTAL LAGOON PARCEL (62,500 GPD)
AVERAGE DAILY FLOW 138 GPM
DESIGN (PEAK) FLOW 415 GPM
STATIC HEAD LOSS 37 FEET
FRICTION HEAD LOSS 25 FEET
MANIFOLD HEAD LOSS 60 FEET

TOTAL DYNAMIC HEAD 122 FEET

PUMP
MAKE ABS (WITH COOLING OPTION)
MODEL XFP100J–CH1
IMPELLER 305mm
MOTOR 33.5 HP, 1750 RPM
460V, 3 PHASE, 60 HZ
SOLIDS 3"
OPERATING POINT 415 GPM @ 122 TDH

PIPING
PUMP DISCHARGE SIZE = 4"
WET WELL PIPING = 6"
FORCE MAIN SIZE = 8"

WELL
INSIDE DIA. OF WET WELL 8'
TOP ELEVATION 120.0
BOTTOM ELEVATION 85.0
INVERT ELEVATION 90.0
C.Y. OF BALLAST REQ'D. 16 CY

ALARMS
BACK–UP AUDIBLE ALARM ON EL. 90.0
AUDIBLE ALARM ON EL. 90.0
LIGHT ON EL. 90.0
LAG PUMP ON EL. 89.5
LEAD PUMP ON EL. 89.0
PUMP OFF EL. (LWL) 86.0

WET WELL HATCH
48"X60" WITH SAFETY NET

TOP SLAB
AS SHOWN w/EXP JOINTS

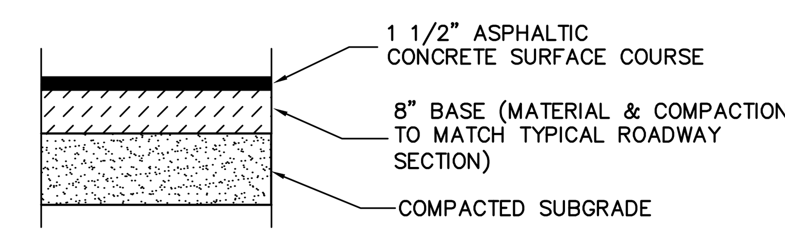

ALTERNATE PAVEMENT SECTION:
6" CONCRETE (3000 PSI W/6 X 6 10/10 W.W.M.)
OVER COMPACTED SUBGRADE

12' WIDE ACCESS ROADWAY SECTION
NTS

NOTE: B.F.E. (100 YR.) = 118.8
TOP OF LIFT STATION SHALL BE 12" ABOVE THE 100 YR B.F.E. EL. OR 12" ABOVE CENTERLINE OF ROAD, WHICHEVER IS GREATER.

GENERAL NOTES :

1. ALL PIPING WITHIN THE WETWELL (LARGER THAN 4") AND ALL ABOVE GROUND PIPING SHALL BE MANUFACTURED FLANGED PIPE. FIELD FABRICATED FLANGES (UNI–FLANGE OR MEGAFLANGE) WILL NOT BE PERMITTED.
2. ALL DUCTILE IRON PIPE AND FITTINGS SHALL BE PROVIDED WITH CERAMIC EPOXY INTERIOR LINING (PROTECTO 401). IN ADDITION, ALL PIPE & FITTINGS WITHIN THE WETWELL SHALL BE PROVIDED WITH POLYETHYLENE SHRINK WRAPPED EXTERIOR COATING.
3. ALL UNDERGROUND FITTINGS SHALL BE RESTRAINED MECHANICAL JOINT AND SHALL BE PROVIDED WITH PROTECTO 401 INTERIOR LINING.
4. IF LIFT CABLES ARE USED, LIFTING RINGS SHALL BE PROVIDED EVERY 4 FT.
5. INDIVIDUAL WALL PENETRATION SLEEVES SHALL BE PROVIDED FOR EACH PUMP CABLE.
6. ALL HARDWARE (INCLUDING FLANGE BOLTS & NUTS) SHALL BE STAINLESS STEEL.
7. ALL ABOVE GROUND PIPING SHALL BE PAINTED SAFETY GREEN.
8. SLAB ELEVATION SHALL BE 12 IN. ABOVE C/L OF ROADWAY OR 12 IN. ABOVE 100 YEAR FLOOD PLAIN – WHICHEVER IS HIGHER.
9. TECHNICAL SPECIFICATIONS SHALL BE MOST CURRENT COPY OF PASCO COUNTY'S – STANDARDS FOR DESIGN AND CONSTRUCTION OF WATER AND WASTEWATER FACILITIES.
10. POSITION PANEL BOX SO OPERATOR'S BACK IS NOT TO WET WELL WHILE FACING BOX. PANEL BOX SHALL BE LOCATED TO ALLOW UNOBSTRUCTED ACCESS TO WET WELL BY EQUIPMENT UTILIZING PAVED ACCESS ROAD. (SEE PLAN VIEW FOR ACTUAL LOCATION.)
11. THE CONTROL CIRCUITRY SHALL PROVIDE FOR ALTERNATING OPERATION OF THE LEAD PUMP UNDER NORMAL CONDITIONS. PASCO COUNTY STANDARDS FOR DESIGN AND CONSTRUCTION OF WATER, WASTEWATER, AND RECLAIMED WATER FACILITIES. JUNE 1995.
12. CONTRACTOR SHALL PREVENT FLOTATION OF PUMP STATION DURING ALL PHASES OF CONSTRUCTION. SEE DESIGN DATA, C.Y. OF BALLAST REQUIRED.
13. PUMP STATION SHALL BE EQUIPPED WITH AN EFFECTIVE METHOD FOR DETECTING SHAFT SEAL FAILURE OR POTENTIAL SEAL FAILURE. PUMPS SHALL BE PROVIDED WITH SEAL FAILURE PROBES THAT WILL CAUSE A RED LIGHT TO TURN ON AT THE CONTROL PANEL.
14. EMERGENCY BACK–UP BATTERY OPERATED AUDIO ALARM SYSTEM WITH INDEPENDENT FLOAT SHALL BE PROVIDED AS REQUIRED BY PASCO COUNTY UTILITIES DEPARTMENT.
15. AREAS WITHIN THE PUMP STATION TRACT SHALL BE COVERED WITH 4" OF #57 STONE. STONE SHALL BE INCLUDED WITH THE PUMP STATION COSTS.
16. ALL UNDERGROUND PIPING, ELECTRIC, WATER SERVICE, ETC., SHALL BE WITHIN THE PUMPING STATION TRACT/PARCEL AS DESIGNATED ON THE PLANS.
17. THE DEVELOPER'S GEOTECHNICAL ENGINEER SHALL PROVIDE THE WET WELL FOUNDATION DESIGN.

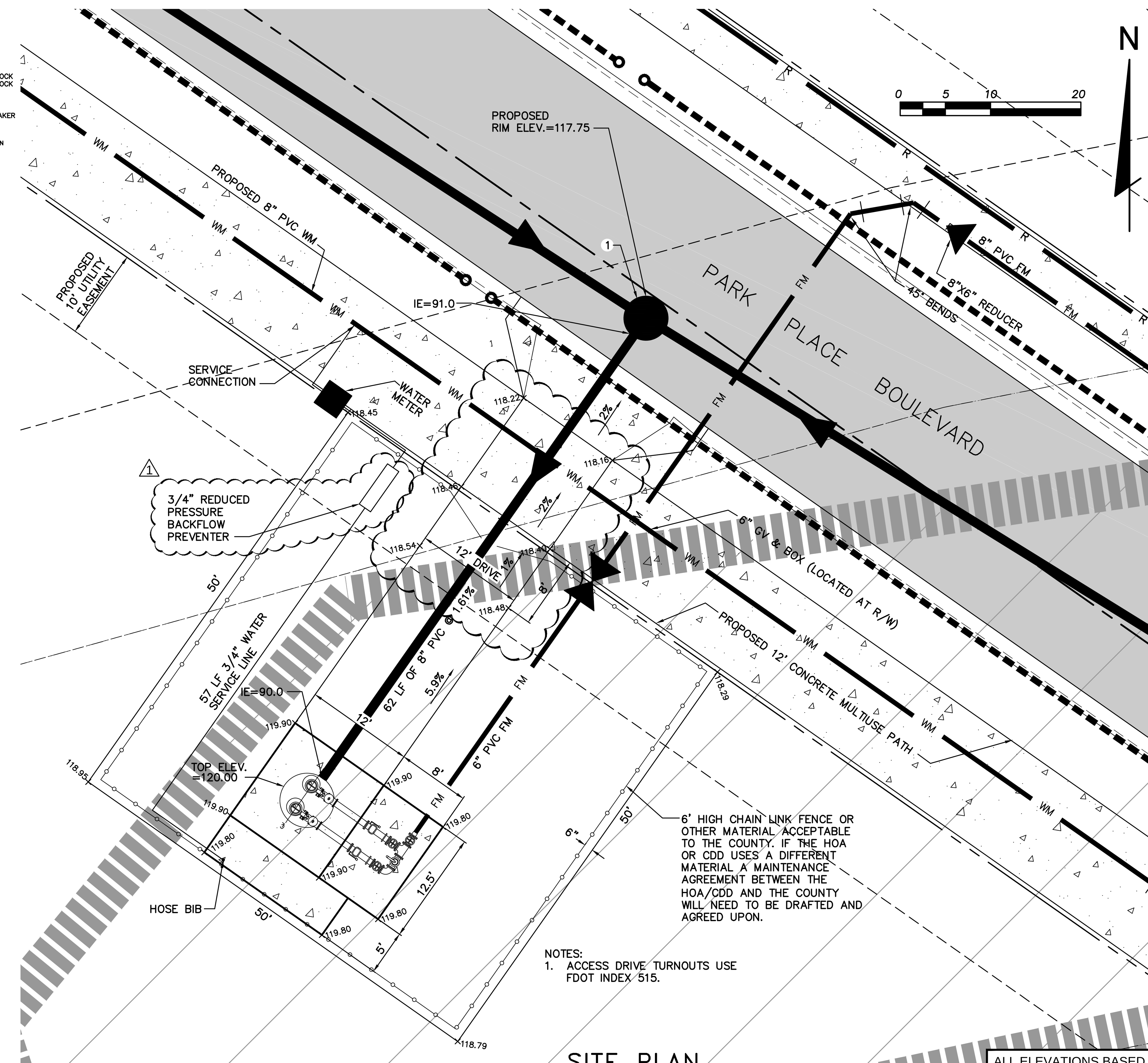

SITE PLAN
1"=10'

ALL ELEVATIONS BASED ON NAVD-1988 DATUM.

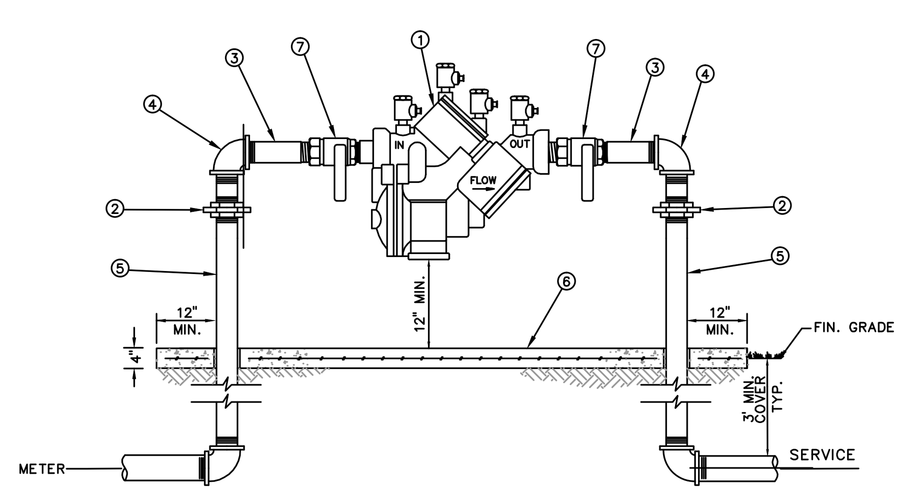

REDUCED PRESSURE BACKFLOW PREVENTER DETAIL
SINGLE SERVICE: 3/4", 1-1/2", 2"
N.T.S.

MATERIALS		
ITEM	QUANT.	DESCRIPTION
1	1	BACKFLOW PREVENTER ASSEMBLY, REDUCED PRESSURE ZONE
2	2	UNIONS - GALV.
3	2	NIPPLES - BRASS
4	2	ELBOWS - GALV. 90°
5	2	RISER - GALV.
6	*	CONCRETE SLAB
7	2	BALL VALVES - BRASS OR S.S. (PROVIDED WITH BFP ASS'Y)

NOTE:
- FIELD ADJUST AND CUT ITEM 5 TO THE PROPER LENGTH.
- MINIMUM CLEARANCE OF 24" TO BE MAINTAINED AROUND DEVICE FOR TESTING.
- ENTIRE ASSEMBLY TO BE PAINTED SAFETY BLUE.
- CONCRETE SLAB TO EXTEND 12" MIN. AROUND ENTIRE DEVICE.
- DEVICE MUST BE LISTED WITH THE UNIVERSITY OF SOUTHERN CALIFORNIA FOUNDATION FOR CROSS CONNECTION CONTROL AND HYDRAULIC RESEARCH.

NOTE:
REFER TO SHEET 17A FOR ELECTRICAL DIAGRAM DETAILS.

STUART M. ROGERS
LICENSE NO. 42718
STATE OF FLORIDA
PROFESSIONAL ENGINEER
12-2-2014

JOB NO. 0597-0025
EPN 137
DATE 8-8-2014
DESIGNED JD
DRAWN AH
CHECKED SR
Q.C.

NO.	DATE	REVISIONS	APP'D BY
2	11-12-14	ADDED GRADES TO LIFT STATION DRIVEWAY	
1	11-06-14	REVISED PER PASCO COUNTY COMMENTS	JC

DESIGNED FOR
EPPERSON RANCH, LLC
2502 NORTH ROCKY POINT DRIVE, SUITE 1050, TAMPA, FLORIDA 33607
PHONE: (813) 288-8078

PROJECT NAME
PARK PLACE ENTRANCE ROAD

SHEET NAME
LIFT STATION

FLORIDA DESIGN CONSULTANTS, INC.
THINK IT. ACHIEVE IT.
707 N. FRANKLIN STREET, 6TH FLOOR, TAMPA, FLORIDA 34655
PHONE: (800) 532 - 1047 FAX: (727) 848 - 3648 WWW.FLDESIGN.COM C.A. NO. 7421

©Copyright 2014 Florida Design Consultants, Inc. Drawings and concepts may not be used or reproduced without written permission.

K:\137\PROJDATA\ConstDocs\PLANS\EPPERSON RANCH BLVD\137_LS-ERB.dwg – Dec 23, 2014 @ 3:49pm – ahulbert
K:\137\PROJDATA\ConstDocs\PLANS\EPPERSON RANCH BLVD\137_LS-ERB.dwg, Layout1, 12/23/2014 3:48:59 PM, ahulbert

1	2	3	4	5	6	7

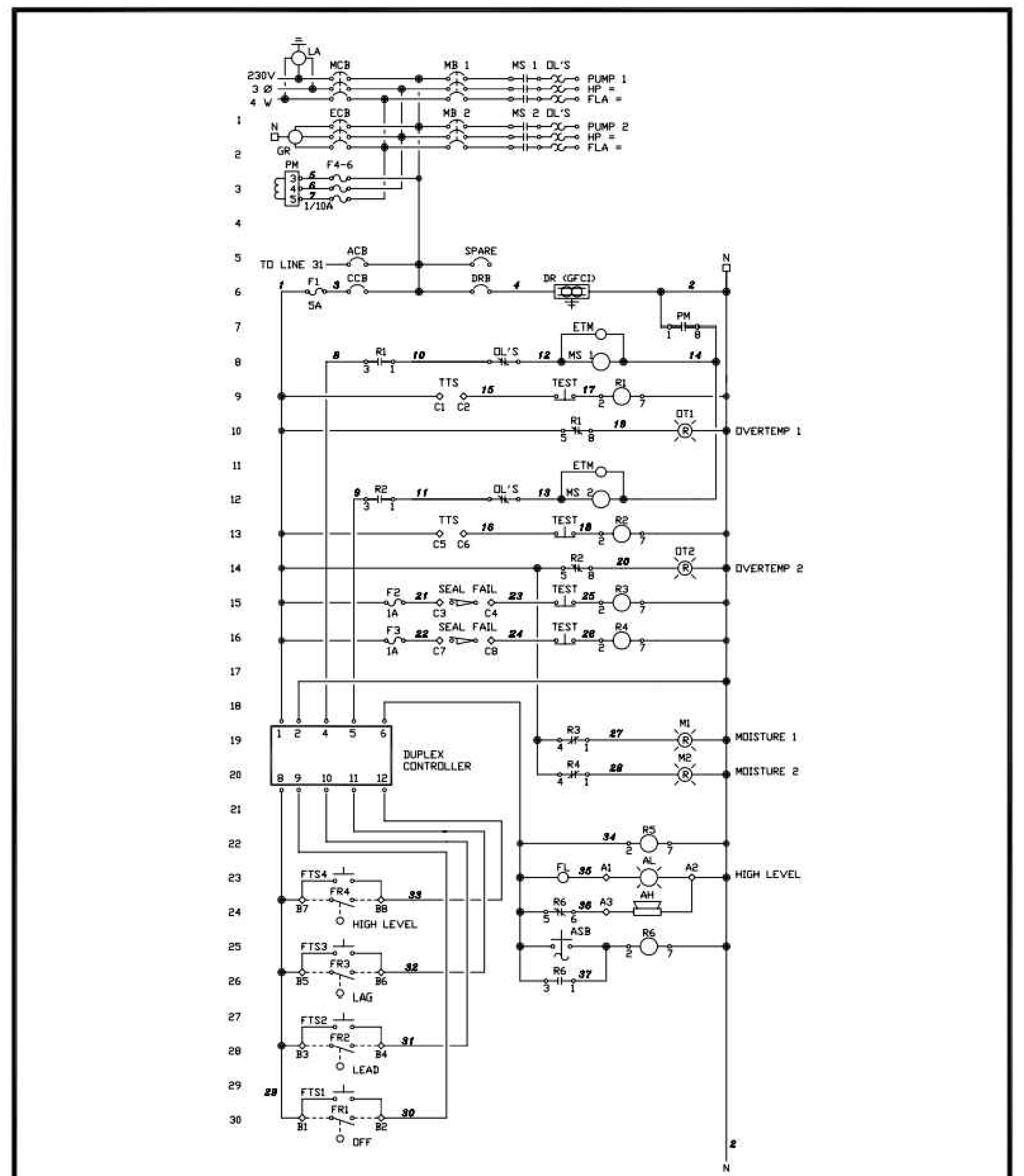

CREATED 02/24/03 REVISED	STANDARD PUMP STATION WIRING DIAGRAM (1 OF 2)	PROVIDED FOR INFORMATIONAL PURPOSES ONLY. NO MODIFICATIONS WITHOUT WRITTEN PCU APPROVAL
	PASCO COUNTY UTILITIES	DETAIL 51

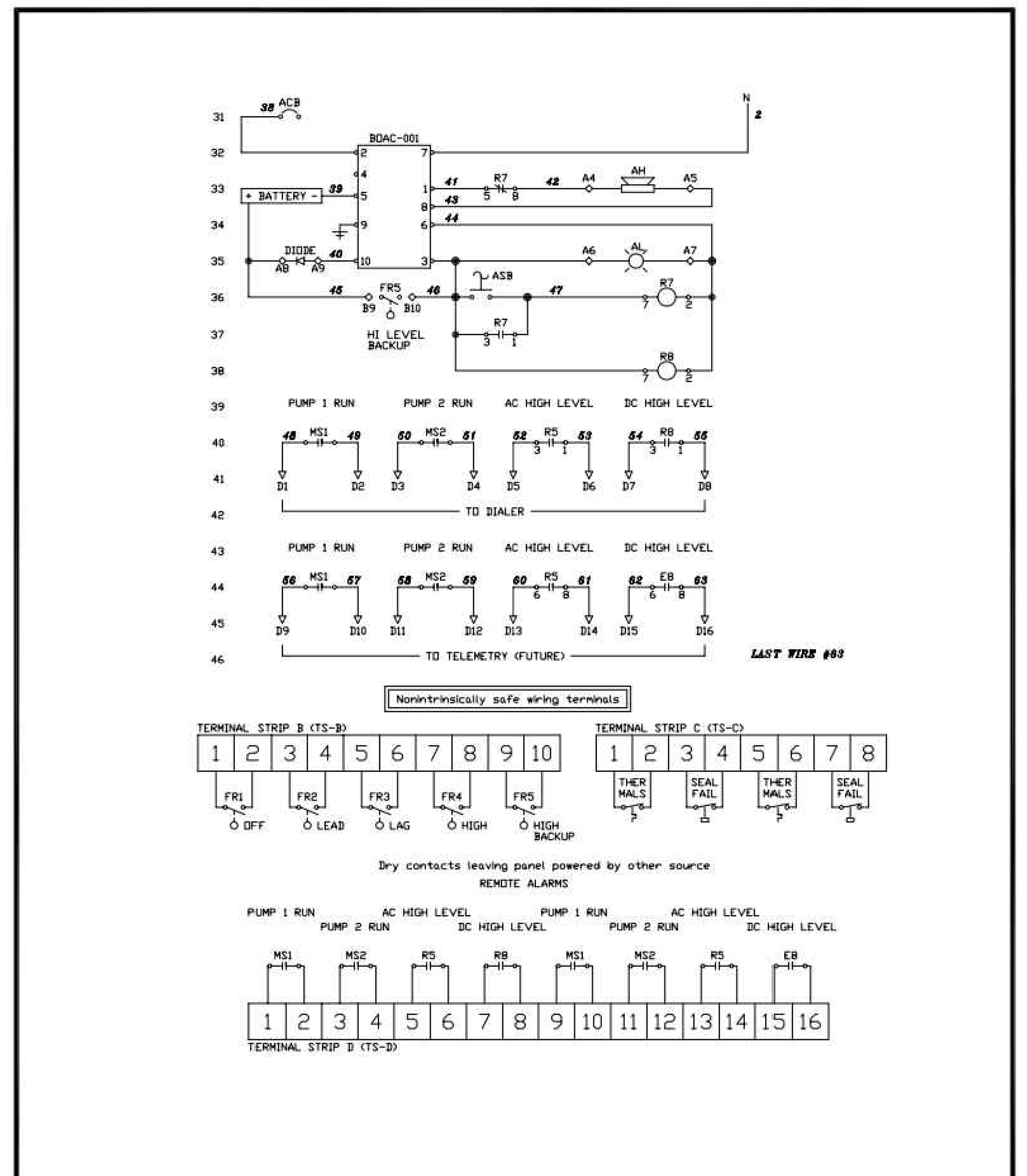

CREATED 02/24/03 REVISED	STANDARD PUMP STATION WIRING DIAGRAM (2 OF 2)	PROVIDED FOR INFORMATIONAL PURPOSES ONLY. NO MODIFICATIONS WITHOUT WRITTEN PCU APPROVAL
	PASCO COUNTY UTILITIES	DETAIL 52

DESIGN NOTES

1. The information shown on this index is intended solely for the purpose of clear sight development and maintenance at intersecting highways, roads and streets, and is not intended to be used to establish roadway and roadside safety except as related to clear sight corridors. An analysis of sight distance shall be documented for all intersections.

2. Details are based on the AASHTO 'A Policy On Geometric Design Of Highways And Streets, 2001', CHAPTER 9, INTERSECTION SIGHT DISTANCE, CASES B and F, and Department practices for channelized median openings (left turns from major roadways).

3. The minimum driver eye setback of 14.5' from the edge of the traveled way may be adjusted on any intersection leg only when justified by a documented, site specific field study of vehicle stopping position and driver eye position.

4. For SIGNALIZED INTERSECTIONS sight distances should be developed based on AASHTO 'Case D–Intersections With Traffic Signal Control'. 'At signalized intersections, the first vehicle stopped on one approach should be visible to the driver of the first vehicle stopped on each of the other approaches. Left– turning vehicles should have sufficient sight distance to select gaps in oncoming traffic and complete left turns. Apart from these sight conditions, there are generally no other approach or departure sight triangles needed for signalized intersections. However, if the traffic signal is to be placed on two –way flashing operation (i.e. flashing yellow on the major –road approaches and flashing red on the minor –road approaches) under off– peak or nighttime conditions, then the appropriate departure sight triangles for Case B, both to the left and to the right, should be provided for the minor –road approaches. In addition, if right turns on a red signal are to be permitted from any approach, then the appropriate departure sight triangle to the left for Case B2 should be provided to accommodate right turns from that approach.'

5. Where curvature, superelevation, adverse split profiles or other conditions preclude the use of standard tree sizes and spacing, proof of view and shadowing restraints must be documented and the size and location of trees in medians detailed in the plans.

6. Intersection sight distance values are provided for Passenger Vehicles, SU Vehicles and Combination Vehicles. Intersection sight distance based on the Passenger Vehicle is suitable for most intersections. Where substantial volumes of heavy vehicles enter the major –road, such as from ramp terminals with stop control or roadways serving truck terminals, the use of tabulated values for SU Vehicles or Combination Vehicles should be considered.

GENERAL NOTES

1. Details apply to both rural and urban intersections under stop sign control or flashing beacon control. For full signal controlled intersections see Design Note No 4. At intersections listed in the Department's High Crash Intersection Report, designers shall give attention to keeping to a minimum, objects that distract or affect sight distance.

2. Sight distance 'd' applies to normal and skewed intersections (intersecting angles between 60° and 120°), and where vertical and/or horizontal curves are not present. Sight distance 'd' is measured along the major roadway from the center of the entrance lane of the minor roadway to the center of the near approach lane (right or left) of the major roadway. Distances 'd_L' and 'd_r' are measured from the centerline of the entrance lane of the minor roadway to a point on the edge of the near side outer traffic lane on the major roadway. Distance 'd_m' is measured from the centerline of the entrance lane of the minor roadway to a point on the median clear zone limit or horizontal clearance limit for the far side roadway of the major roadway.

3. A. The limits of clear sight define a corridor throughout which a clear sight window must be preserved. See WINDOW DETAIL, Sheet 2.

   B. Clear sight must be provided between vehicles at intersection stop locations, and vehicles on the major roadway within dimension 'd'.

   C. Since observations are made in both directions along the line of sight, the reference datum between roadways is 3'–6" above respective pavements.

4. Barrier systems within intersection sight corridors, where penetration into the sight window might occur, shall be located to provide the least adverse affect practical.

5. The corridor defined by the limits of clear sight is a restricted planting area. Drivers of vehicles on the intersecting roadway and vehicles on the major roadway must be able to see each other clearly throughout the limits of 'd' and 'd_a'. If in the Engineers judgement, landscaping interferes with the line of sight corridor prescribed by these standards the Engineer may rearrange, relocate or eliminate plantings. Plants within the restricted areas are limited to selections as follows:

5. (Cont.)
   Ground Cover & Trunked Plants (Separate or Combined):

   Ground Covers – Plant selection of low growing vegetation which at maturity does not attain a height greater than 18" below the sight line datum. For ground cover in combination with trees and palms; the following heights below the sight line datum will apply:

   24" for trees and palms ≤ 11" dia.; and, 18" for sabal palms >11" but ≤ 18" dia. (dia.–within Sight Window).

   Trunked Plants – Plant selection of a mature trunk diameter 4" or less measured at 6" above the ground. Canopy or high borne foliage shall never be lower than 5' above the sight line datum. These selections shall be spaced no closer than 20'.

   Trees – Trees can be installed with sod; pavers; gravel, mulch; ground covers or other Department approved material. The clear sight window must be in conformance with the 'WINDOW DETAIL' modified to attain the height requirements listed in 'Ground Covers' above.

   A. Size and spacing shall conform to the Tree Spacing Table.

   B. Requirements for placement within medians at median openings and at unsignalized and signalized intersections:

   a. Horizontal clearance for the mature specimen shall be maintained as specified in Index 700. Specimens whose mature trunk diameter is greater than 18 inches shall not be permitted,

   b. Where left turns from the major road are permitted, no trees shall be located within the distance 'd_b', Sheet 2 of 6; and not less than the distances called for in (c) or (d), as applicable,

   c. For safety, these additional setbacks are required:

   1. Where no left turn lane is present, size and spacing shall conform to the Tree Spacing Table. No trees shall be permitted within 100' of the restricted median nose (measured from the edge of pavement),

   2. Where left turn lane(s) are present, the following requirements apply:

   - For low speed facilities (design speed less than 50 mph), size and spacing shall conform to the Tree Spacing Table. No trees shall be permitted within 100' of the restricted median nose (measured from the edge of pavement).
   - For high speed facilities (design speed 50 mph or greater), no trees shall be permitted within 200' of the restricted median nose. Beyond this limit, size and spacing shall conform to the Tree Spacing Table.

TREE SPACING TABLE **

Description	Speed (mph)													
	30		35		40		45		50		55		60	
Diameter (Within Limits Of Sight Window)	(Inches)													
	>4≤11	>11≤18	>4≤11	>11≤18	>4≤11	>11≤18	>4≤11	>11≤18	>4≤11	>11≤18	>4≤11	>11≤18	>4≤11	>11≤18
	(Feet)													
Minimum Spacing (c. to c. Of Trunk)	25	90	30	105	35	120	40	135	50	150	55	165	60	180

** Sizes and spacings are based on the following conditions:
a. A single line of trees in the median parallel to but not necessarily colinear with the centerline.

b. A straight approaching mainline, within skew limits as described in No. 2 above.

c. 1. Trees and palms ≤ 11" in diameter casting a vertical 6' wide shadow band on a vehicle entering at stop bar location when viewed by mainline driver beginning at distance 'd'; see SHADOW DIAGRAM, Sheet 2.

2. Sabal palms with diameters > 11" ≤ 18" spaced at intervals providing a 2 second full view of entering vehicle at stop bar location when viewed by the mainline driver beginning at distance 'd'; see PERCEPTION DIAGRAM, Sheet 2.

d. Trees with diameters ≤ 11" intermixed with trees with diameters > 11" ≤ 18" are to be spaced based on trees with diameters > 11" ≤ 18".

For any other conditions the tree sizes, spacings and locations shall be detailed in the plans; see Design Note 5.

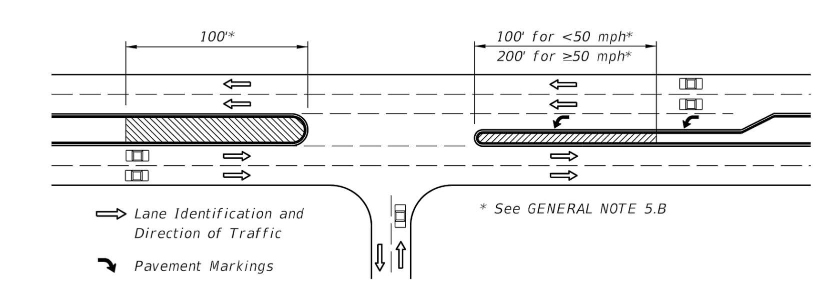

PLAN
Special Areas Limited to Ground Cover

5:52:26 PM 5/27/2014

LAST REVISION 07/01/13	REVISION	DESCRIPTION:	FDOT 2015 DESIGN STANDARDS	SIGHT DISTANCE AT INTERSECTIONS	INDEX NO. 546	SHEET NO. 1 of 6

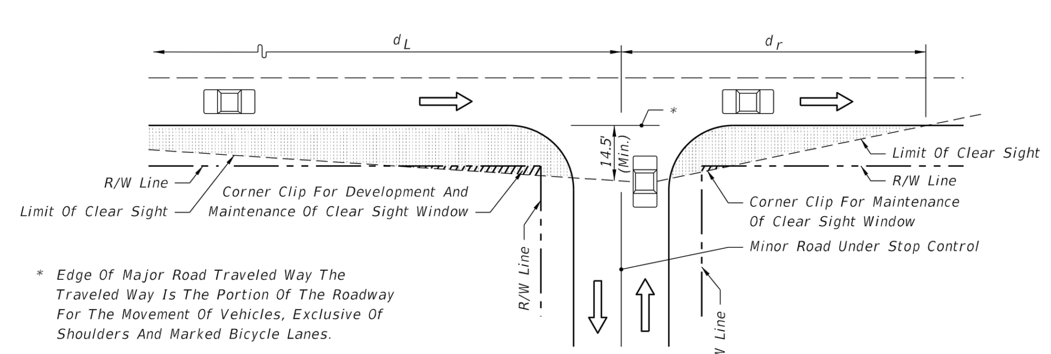

* Edge Of Major Road Traveled Way The Traveled Way Is The Portion Of The Roadway For The Movement Of Vehicles, Exclusive Of Shoulders And Marked Bicycle Lanes.

Note:
Lines For 'Limit Of Clear Sight' Are Opposite Hand When Major Road Near Lane Traffic Moving Left (e.g., One-Way Left).

PICTORIAL
ORIGIN OF CLEAR SIGHT LINE ON MINOR ROAD

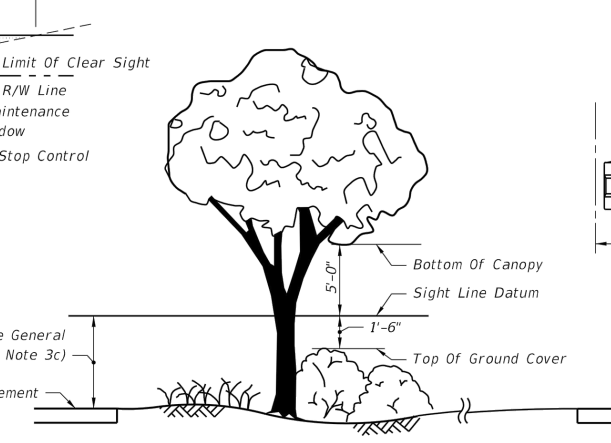

The Intent Of This Standard Is To Provide A Window With Vertical Limits Of Not Less Than 5' Above And 1'-6" Below The Sight Line Datum, And Horizontal Limits Defined By The Limits Of Clear Sight.

PICTORIAL
WINDOW DETAIL

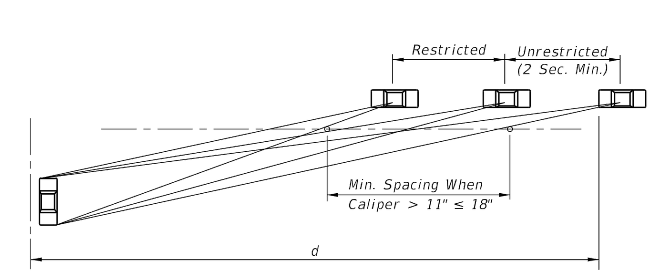

PERCEPTION DIAGRAM
SETTING SABAL PALM (STATE TREE) SPACING

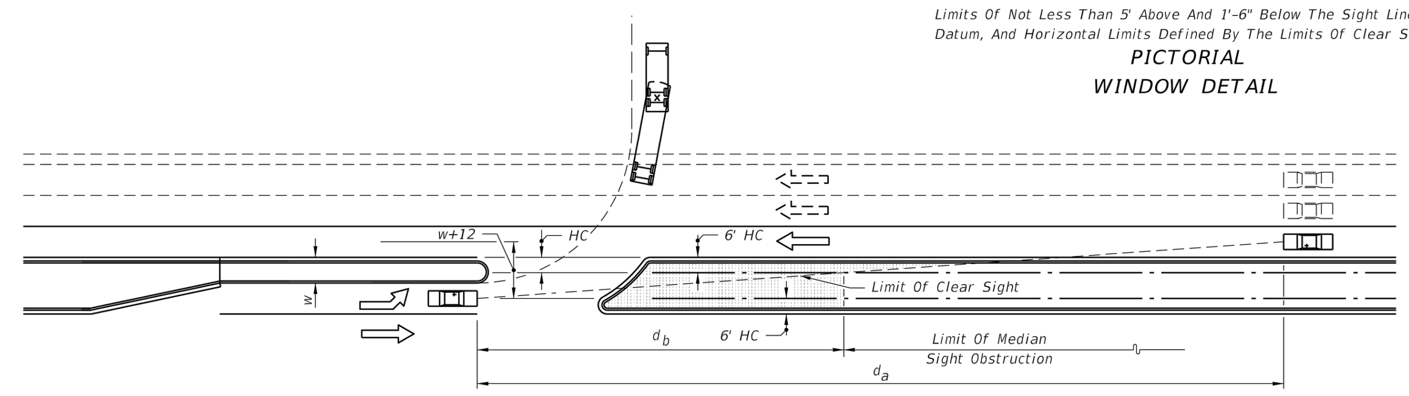

PICTORIAL

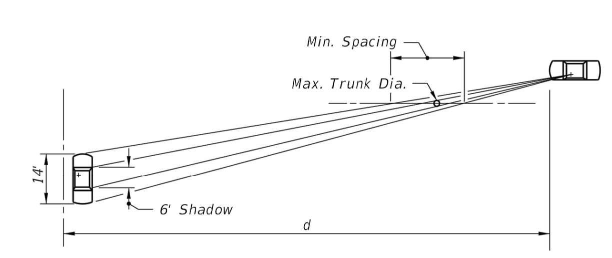

SHADOW DIAGRAM

LEGEND
Areas Free Of Sight Obstructions

Design Speed MPH	d_a (Feet) 1 Lane Crossed P	SU	Comb.	2 Lanes Crossed P	SU	Comb.	3 Lanes Crossed P	SU	Comb.
30	245	290	330	265	320	365	290	350	395
35	285	335	385	310	370	425	335	410	460
40	325	385	440	355	425	485	385	465	525
45	365	430	495	400	475	545	430	525	590

☆ See Note

☆ The d_a values in this table were established by the method referenced in Design Note 2, and are applicable to urban, predominantly curbed roadways with design speeds of 45 mph or less and meeting the restricted conditions defined in Index No. 700. For horizontal clearance (HC) of six feet (6'), the values for d_b may be determined by the equation $d_b = d_a (w/(w+12))$. For roadways with nonrestricted conditions, d_a and d_b should be based on the geometry for the left turn storage and on clear zone widths (See Index No. 700).

For wide medians where the turning vehicle can approach the through lanes at or near 90°, use d_v values from tables on sheets 5 or 6. (The clear sight line origin is assumed to be 14.5' from the edge of the near lane.)

CHANNELIZED DIRECTIONAL MEDIAN OPENINGS

5:52:28 PM 5/27/2014

LAST REVISION 07/01/14	REVISION	DESCRIPTION:	FDOT 2015 DESIGN STANDARDS	SIGHT DISTANCE AT INTERSECTIONS	INDEX NO. 546	SHEET NO. 2 of 6

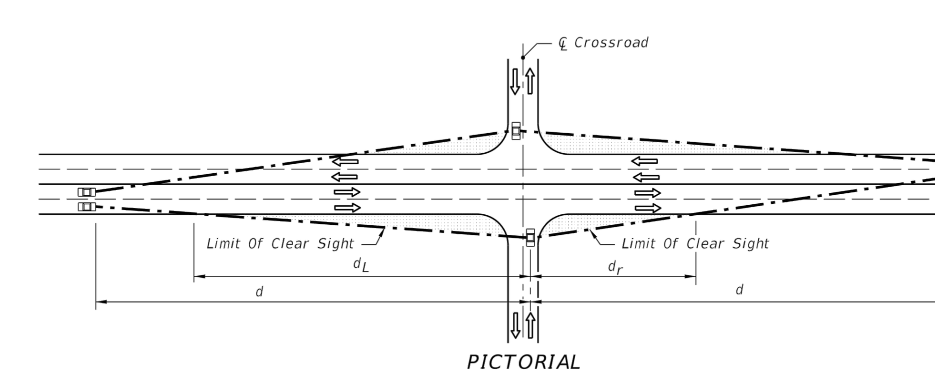

PICTORIAL
4 LANE UNDIVIDED

SIGHT DISTANCE (d) AND RELATED DISTANCES (d_L, d_r) (FEET)
4 LANE UNDIVIDED

Design Speed	Passenger Vehicle d	d_L	d_r	SU Vehicle d	d_L	d_r	Combination Vehicle d	d_L	d_r
30	355	255	120	450	320	150	540	385	180
35	415	295	135	525	375	175	630	450	205
40	475	335	155	600	425	200	720	510	235
45	530	375	175	675	480	220	810	575	265
50	590	420	195	750	530	245	900	640	295
55	650	460	215	825	585	270	990	700	325
60	705	500	230	900	640	295	1080	765	355
65	765	545	250	975	690	320	1170	830	385

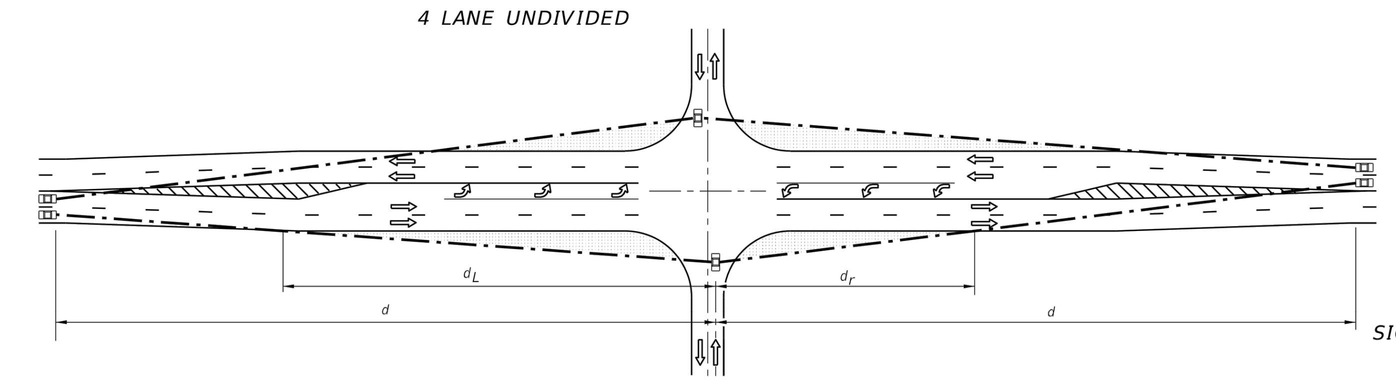

PICTORIAL
4 LANE UNDIVIDED FLARED - SYMMETRICAL

SIGHT DISTANCE (d) AND RELATED DISTANCES (d_L, d_r) (FEET)
4 LANE UNDIVIDED FLARED - SYMMETRICAL

Design Speed	Passenger Vehicle d	d_L	d_r	SU Vehicle d	d_L	d_r	Combination Vehicle d	d_L	d_r
30	375	205	110	480	265	140	570	315	165
35	440	245	130	560	310	165	665	365	195
40	500	275	145	640	350	185	760	420	220
45	565	310	165	720	395	210	855	470	245
50	625	345	180	800	440	230	950	520	275
55	690	380	200	880	485	255	1045	575	300
60	750	410	215	960	525	280	1140	625	330
65	815	450	235	1040	570	300	1235	675	355

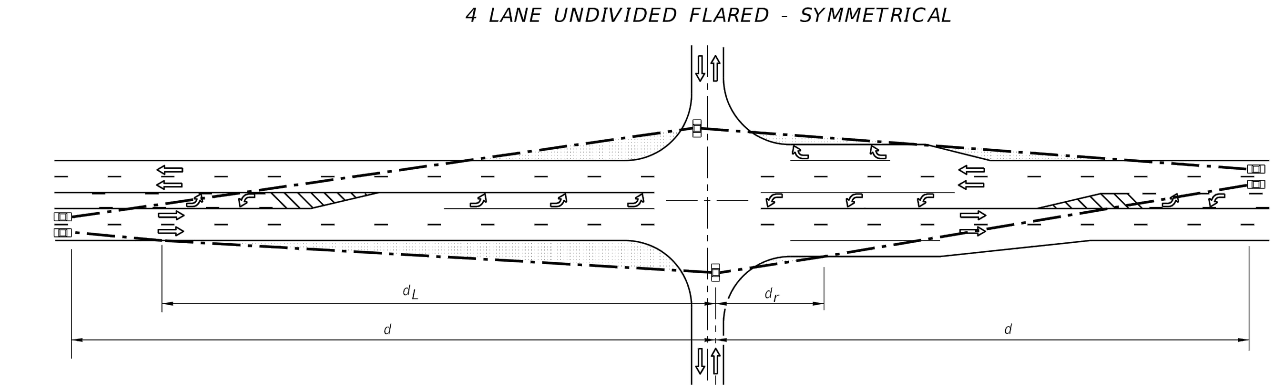

PICTORIAL
4 LANE UNDIVIDED WITH OPTIONAL LANE

SIGHT DISTANCE (d) AND RELATED DISTANCES (d_L, d_r) (FEET)
4 LANE UNDIVIDED WITH OPTIONAL LANE

Design Speed	Passenger Vehicle d	d_L	d_r	SU Vehicle d	d_L	d_r	Combination Vehicle d	d_L	d_r
30	375	265	80	480	340	105	570	405	125
35	440	315	95	560	400	120	665	470	145
40	500	355	110	640	455	135	760	540	165
45	565	400	120	720	510	155	855	605	185
50	625	445	135	800	570	170	950	675	205
55	690	490	150	880	625	190	1045	740	225
60	750	530	160	960	680	205	1140	810	245
65	815	580	175	1040	740	220	1235	875	265

LEGEND
Areas Free Of Sight Obstructions

NOTE: See Sheet 2 for intersecting roadway origin of clear sight and quadrant corner clips.

5:52:29 PM 5/27/2014

LAST REVISION 07/01/14	REVISION	DESCRIPTION:	FDOT 2015 DESIGN STANDARDS	SIGHT DISTANCE AT INTERSECTIONS	INDEX NO. 546	SHEET NO. 4 of 6

STUART M. ROGERS LICENSE NO. 42718 STATE OF FLORIDA PROFESSIONAL ENGINEER
12-2-2014

JOB NO. 0597-0025 | EPN 137 | DATE 8-8-2014 | DESIGNED JD | DRAWN AH | CHECKED SR | Q.C.

NO.	DATE	REVISIONS	APP'D BY
1	11-6-14	PASCO COUNTY COMMENTS	

DESIGNED FOR
EPPERSON RANCH, LLC
2502 NORTH ROCKY POINT DRIVE, SUITE 1050, TAMPA, FLORIDA 33607
PHONE: (813) 288-8078

PROJECT NAME
PARK PLACE ENTRANCE ROAD

SHEET NAME
MISCELLANEOUS DETAILS

FLORIDA DESIGN CONSULTANTS, INC.
THINK IT. ACHIEVE IT.
707 N. FRANKLIN STREET, 6TH FLOOR, TAMPA, FLORIDA 34655
PHONE: (800) 532 - 1047 FAX: (727) 848 - 3648 WWW.FLDESIGN.COM C.A. NO. 7421

SHEET 17A OF 19

©Copyright 2014 Florida Design Consultants, Inc. Drawings and concepts may not be used or reproduced without written permission.

K:\137\PROJDATA\CONSTDOCS\PLANS\EPPERSON RANCH BLVD\137_DTUT-4-ERB.dwg - Dec 23, 2014 @ 3:49pm - ahulbert
K:\137\PROJDATA\CONSTDOCS\PLANS\EPPERSON RANCH BLVD\137_DTUT-4-ERB.dwg, Layout1, 12/23/2014 3:49:13 PM, ahulbert

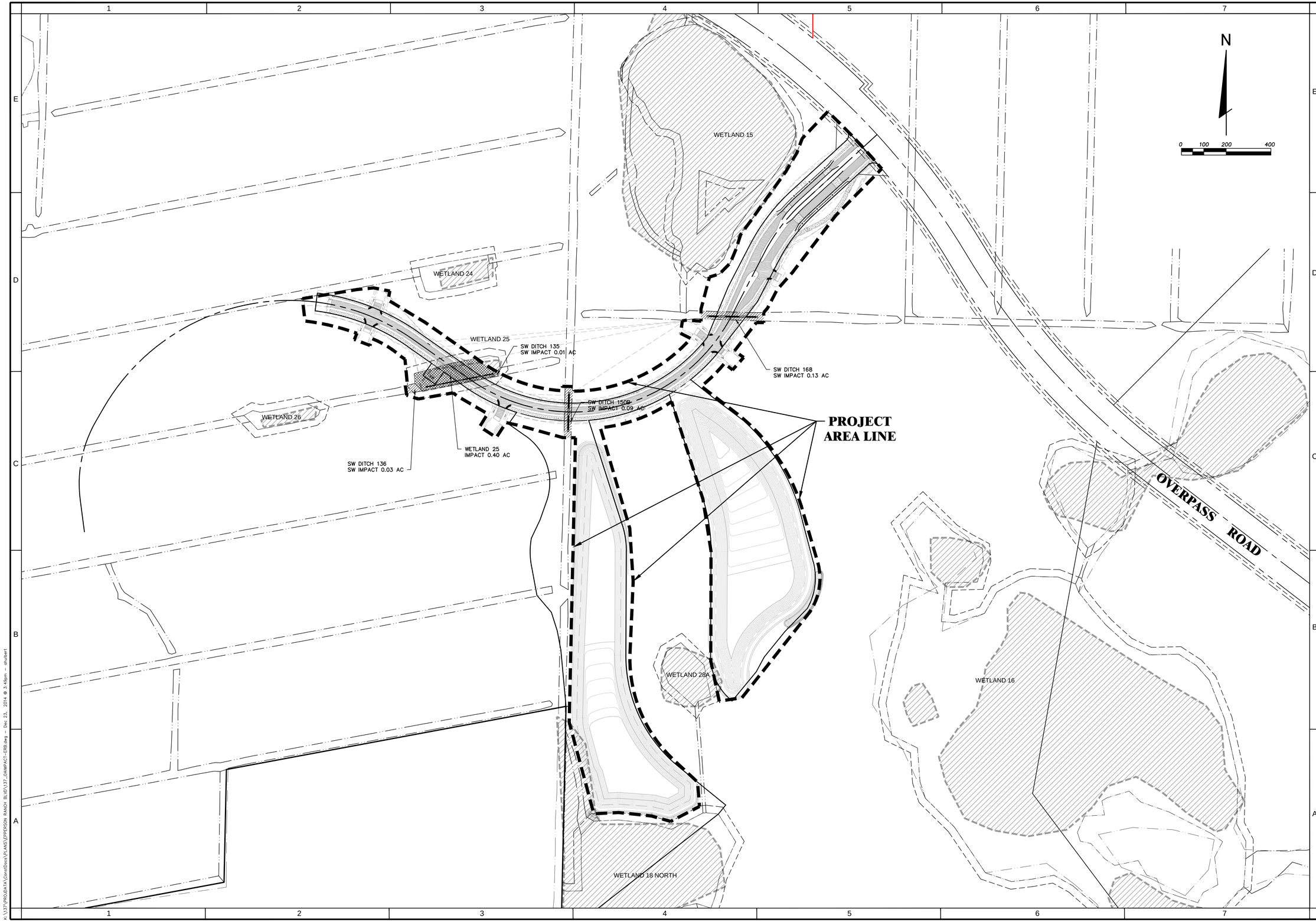

STUART M. ROGERS
LICENSE
NO. 42718
STATE OF FLORIDA
PROFESSIONAL ENGINEER

12-2-2014

JOB NO.	EPN	DATE	DESIGNED	DRAWN	CHECKED	APP'D BY
0597-0025	137	8-8-2014	JD	AH	SR	

NO.	DATE	REVISIONS

DESIGNED FOR
EPPERSON RANCH, LLC
2502 NORTH ROCKY POINT DRIVE, SUITE 1050, TAMPA, FLORIDA 33607
PHONE: (813) 288-8078

PROJECT NAME
PARK PLACE ENTRANCE ROAD

SHEET NAME
WETLAND IMPACT PLAN

FLORIDA DESIGN CONSULTANTS, INC.
THINK IT. ACHIEVE IT.
707 N. FRANKLIN STREET, 6TH FLOOR, TAMPA, FLORIDA 34655
PHONE: (800) 532 - 1047 FAX: (727) 848 - 3648 WWW.FLDESIGN.COM C.A. NO. 7421

© Copyright 2014 Florida Design Consultants, Inc. Drawings and concepts may not be used or reproduced without written permission.

K:\137\PROJDATA\ConstDocs\PLANS\EPPERSON RANCH BLVD\137_OAIMPACT-ERB.dwg, Layout1, 12/23/2014 3:49:43 PM, ahulbert

PASCO COUNTY LANDSCAPING STANDARD NOTES

1. MAINTENANCE RESPONSIBILITY. THE COUNTY IS NOT RESPONSIBLE FOR MAINTENANCE OF ANY LANDSCAPING UNLESS APPROVED THROUGH A COUNTY MAINTENANCE AGREEMENT. (LDC 905.2-C.1.A)

2. CLEAR-SIGHT TRIANGLE. WHERE A DRIVEWAY/ACCESSWAY INTERSECTS A ROAD RIGHT-OF-WAY OR WHERE TWO (2) ROAD RIGHTS-OF-WAY INTERSECT, VEGETATION, STRUCTURES, AND NON-VEGETATIVE VISUAL SCREENS SHALL NOT BE LOCATED SO AS TO INTERFERE WITH THE CLEARSIGHT TRIANGLE AS DEFINED IN THIS CODE OR THE FLORIDA DEPARTMENT OF TRANSPORTATION, MANUAL OF UNIFORM MINIMUM STANDARDS, MOST RECENT EDITION (GREEN BOOK), WHICHEVER IS MORE RESTRICTIVE. (LDC 905.2-C.1.B)

3. SUSTAINABLE PRACTICES. LANDSCAPING SHALL BE INSTALLED SO THAT LANDSCAPING MATERIALS MEET THE CONCEPT OF RIGHT MATERIAL/RIGHT PLACE. INSTALLED TREES AND PLANTS SHALL BE GROUPED INTO ZONES ACCORDING TO WATER, SOIL, CLIMATE, AND LIGHT REQUIREMENTS. PLANT GROUPINGS BASED ON WATER REQUIREMENTS ARE DROUGHT TOLERANT, NATURAL, AND OASIS. (LDC 905.2-C.1.C)

4. DIVERSITY. A MAXIMUM OF 50 PERCENT OF THE PLANT MATERIALS USED, OTHER THAN TREES, MAY BE NON-DROUGHT TOLERANT. A MINIMUM OF 30 PERCENT OF THE PLANT MATERIALS, OTHER THAN TREES AND TURFGRASS, USED TO FULFILL THE REQUIREMENTS OF THIS SUBSECTION SHALL BE NATIVE FLORIDIAN SPECIES, SUITABLE FOR GROWTH IN THE COUNTY. (LDC 905.2-C.1.D)

5. DIVERSITY. NO ONE PLANT SPECIES OF SHRUBS OR GROUND COVER PLANTS, EXCLUDING TURFGRASS, SHALL CONSTITUTE MORE THAN 25 PERCENT COVERAGE OF THE OVERALL LANDSCAPE AREA. (LDC 905.2-C.1.D.5)

6. QUALITY. ALL PLANT MATERIALS SHALL BE FLORIDA NO. 1 GRADE PER "GRADES AND STANDARDS FOR NURSERY PLANTS," FLORIDA DEPARTMENT OF AGRICULTURE AND CONSUMER SERVICES (FDACS), WHICH IS INCORPORATED HEREIN BY REFERENCE. (LDC 905.2-C.2.A)

7. AVOID EASEMENTS. TREES SHALL NOT BE PLANTED WITHIN ANY EASEMENT SO AS TO INTERFERE WITH THE USE OF THAT EASEMENT, NOR UNDER ANY PRESENT OR PLANNED OVERHEAD UTILITY, NOR IN ANY RIGHTS-OF-WAY WITHOUT COUNTY APPROVAL THROUGH THE ASSOCIATED REVIEW PROCESS. (LDC 905.2-C.3.C)

8. MULCH SHALL BE USED IN CONJUNCTION WITH LIVING PLANT MATERIALS SO AS TO COVER EXPOSED SOIL. MULCH SHALL BE INSTALLED TO A MINIMUM DEPTH OF THREE (3) INCHES. THE MULCH SHOULD NOT BE PLACED DIRECTLY AGAINST THE PLANT STEM OR TREE TRUNK. MULCH SHALL NOT BE REQUIRED FOR ANNUAL BEDS. STONE OR GRAVEL MAY BE USED TO COVER A MAXIMUM OF 20 PERCENT OF THE LANDSCAPED AREA. (LDC 905.2-C.3.D)

9. QUALITY PRACTICES. ALL LANDSCAPING SHALL BE INSTALLED IN ACCORDANCE WITH STANDARDS AND PRACTICES OF THE FLORIDA NURSERY, GROWERS, AND LANDSCAPE ASSOCIATION AND THE FLORIDA CHAPTER OF THE INTERNATIONAL SOCIETY OF ARBORICULTURE. (LDC 905.2-C.3.E)

10. ALL PORTIONS OF A LOT UPON WHICH DEVELOPMENT HAS COMMENCED, BUT NOT CONTINUED FOR A PERIOD OF 30 DAYS, SHALL BE PLANTED WITH A GRASS SPECIES OR GROUND COVER TO PREVENT EROSION AND ENCOURAGE SOIL STABILIZATION. ADEQUATE COVERAGE, SO AS TO SUPPRESS FUGITIVE DUST, SHALL BE ACHIEVED WITHIN 45 DAYS. (LDC 905.2-C.3.G)

11. ALL REQUIRED LANDSCAPING SHALL BE MAINTAINED IN A HEALTHY CONDITION IN PERPETUITY IN ACCORDANCE WITH THIS CODE. (LDC 905.2-E.2)

12. ONGOING MAINTENANCE TO PREVENT THE ESTABLISHMENT OF PROHIBITED EXOTIC SPECIES IS REQUIRED. (LDC 905.2-E.4)

SPECIFICATIONS

PLANT MATERIALS: ALL TREES, PALMS, SHRUBS, GROUNDCOVERS, LITTORALS, WATER PLANTS, SOD AND VINES SHALL CONFORM TO THOSE SPECIES AND SIZES INDICATED ON THE DRAWINGS. ALL NURSERY STOCK SHALL BE IN ACCORDANCE WITH GRADES AND STANDARDS FOR NURSERY PLANTS AS DETERMINED BY THE FLORIDA DEPARTMENT OF AGRICULTURE AND CONSUMER SERVICES, UNLESS SPECIFIED OTHERWISE, ALL PLANTS SHALL BE FLORIDA GRADE NUMBER 1 OR BETTER AS DETERMINED BY THE FLORIDA DIVISION OF PLANT INDUSTRY. SPECIMEN MEANS A PLANT THAT IS TRAINED IN ITS DEVELOPMENT TO POSSESS UNQUESTIONABLE AND OUTSTANDINGLY SUPERIOR IN FORM, BRANCHING, COMPACTNESS AND SYMMETRY. TREES FOR PLANTING ROWS SHALL BE UNIFORM IN SIZE AND SHAPE. SINGLE TRUNK TREES SHALL HAVE A STRAIGHT, CENTRAL LEADER. MULTI-TRUNK TREES ARE TO HAVE 3-5 EQUAL SIZED TRUNKS UNLESS OTHERWISE SPECIFIED. PLANTS WITH MARRED OR BURNED TRUNKS WILL NOT BE ACCEPTED. PLANTS SHALL BE PRUNED PRIOR TO DELIVERY ONLY IN ACCORDANCE WITH INTERNATIONAL SOCIETY OF ARBORIST GUIDELINES TO INSURE PROPER HEALTH AND VIGOROUS GROWTH. ALL MATERIALS SHALL BE SUBJECT TO FLORIDA DESIGN CONSULTANTS INC.'S APPROVAL.

BALLED & BURLAPPED: ALL BALLED & BURLAPPED STOCK SHALL BE FRESHLY DUG, SOUND, HEALTHY, VIGOROUS, WELL-BRANCHED, FREE FROM DISEASE AND INSECTS, SECURE IN THE ROOTBALL, AND POSSESS ADEQUATE ROOT SYSTEMS. ALL BURLAP SHALL BE REMOVED FROM THE TOP ONE-THIRD OF THE BALL TO PREVENT WICKING. ANY BURLAP THAT IS NOT BIODEGRADABLE SHALL BE CAREFULLY REMOVED TO PROTECT DAMAGE TO FEEDER ROOTS. GROW BAGS SHALL BE REMOVED IN THEIR ENTIRETY. ALL BALLED & BURLAPPED STOCK THAT IS NOT IMMEDIATELY PLANTED, SHALL BE HEALED IN AND THOROUGHLY WATERED UNTIL PLANTING. LIFTING, MOVING, OR ADJUSTING THE PLANT MATERIAL BY THE TRUNK IS PROHIBITED.

CONTAINER GROWN STOCK: ALL CONTAINER GROWN STOCK SHALL BE HEALTHY, VIGOROUS, WELL-ROOTED (NOT ROOT BOUND), AND ESTABLISHED IN THE CONTAINER IN WHICH THEY ARE SOLD. THE PLANTS SHALL HAVE TOPS OF GOOD QUALITY AND BE IN A HEALTHY GROWING CONDITION. ALL CONTAINER GROWN STOCK THAT IS NOT IMMEDIATELY PLANTED, SHALL BE STORED IN A MANNER TO SHADE THE CONTAINERS FROM DIRECT SUNLIGHT TO MINIMIZE ROOT DAMAGE. ALL CONTAINER STOCK SHALL BE THOROUGHLY WATERED PRIOR TO PLANTING AND DURING STORAGE UNTIL PLANTING. LIFTING AND MOVING OF THE PLANT MATERIAL SHALL BE BY THE CONTAINER ONLY.

MEASUREMENTS: TREES HEIGHTS SHALL BE MEASURED FROM GROUND TO THE AVERAGE BRANCH HEIGHT OF CANOPY. SPREAD SHALL BE MEASURED TO THE END OF BRANCHING EQUALLY AROUND THE CROWN FROM THE CENTER OF THE TRUNK. MEASUREMENTS SHALL NOT INCLUDE ANY TERMINAL GROWTH. SHRUBS HEIGHT SHALL BE MEASURED FROM THE GROUND TO THE AVERAGE POINT WHERE MATURE PLANT GROWTH STOPS. SPREAD SHALL BE MEASURED TO THE END OF BRANCHING EQUALLY AROUND THE SHRUB MASS. MEASUREMENT SHALL NOT INCLUDE ANY TERMINAL GROWTH. PALMS SHALL BE MEASURED BY THREE HEIGHT CLASSIFICATIONS: OVERALL HEIGHT, CLEAR WOOD, AND GRAY WOOD. OVERALL HEIGHT SHALL BE MEASURED FROM THE FROM THE GROUND TO THE AVERAGE FROND HEIGHT AT TIME OF INSTALLATION. CLEAR WOOD SHALL BE MEASURED FROM THE GROUND AT TIME OF INSTALLATION TO THE BOTTOM OF THE FROND SHEATH. GRAY WOOD SHALL BE MEASURED FROM THE GROUND AT TIME OF INSTALLATION TO THE TOP OF HARDENED WOOD.

PLANTING SOIL AND BACKFILL: PLANTING SOIL FOR USE IN PREPARING BACKFILL FOR PLANT PITS SHALL BE A FERTILE, FRIABLE, NATIVE SOIL WITHOUT MIXTURE OF SUBSOIL MATERIALS. IT SHALL BE FREE FROM HEAVY CLAY, STONES, LIME, LUMPS, PLANTS, ROOTS OR OTHER FOREIGN MATERIALS, NOXIOUS GRASSES OR WEEDS. IT SHALL NOT CONTAIN TOXIC SUBSTANCES WHICH MAY BE HARMFUL TO PLANT GROWTH. AMEND BEDS WITH 3" MINIMUM OF ORGANICS TO ACHIEVE OPTIMAL PH LEVELS AND SOIL AERATION. ROTOTILL TO A DEPTH OF 6" AND INCORPORATE A COMPLETE SLOW RELEASE FERTILIZER AT A 3-1-2 RATIO. THE RESULTS OF POST SOIL MODIFICATION TESTING, BASED ON LIKE PLANTING CONDITIONS AND AREA PROXIMITY, SHALL BE SUBMITTED TO FLORIDA DESIGN CONSULTANTS INC.'S FOR APPROVAL PRIOR TO PLANTING.

COMMERCIAL FERTILIZER: FERTILIZERS SHALL BE UNIFORM IN COMPOSITION, DRY, AND FREE FLOWING AND DELIVERED TO THE SITE IN ORIGINAL UNOPENED BAGS BEARING ALL THE MANUFACTURER'S LABELS. ALL FERTILIZER IS TO BE SLOW RELEASE AND COMPLETE WITH NECESSARY MICRONUTRIENTS. AFTER INSTALLATION, FERTILIZER SHALL BE CLEANED FROM ALL HARDSCAPE SURFACES AND WATERED IN THOROUGHLY PER MANUFACTURER'S SPECIFICATIONS. TREES AND SHRUBS MIXTURE SHALL CONSIST OF A SLOW RELEASE THE FORMULATION OF 3 PARTS NITROGEN TO 1 PART PHOSPHOROUS TO 2 PARTS POTASSIUM (3-1-2 RATIO). ALL TREES AND SHRUBS SHALL BE FERTILIZED BI MONTHLY DURING THE GROWING SEASON AT A RATE OF 4-6 LBS. OF A PER 100 SQ. FT. OF BEDS / TREE CANOPY (3' FORM BASE TO DRIPLINE) OR PER MANUFACTURE'S RECOMMENDATION. SOD FERTILIZER SHALL BE TURF SPECIFIC FOR ESTABLISHING NEW LAWNS AND APPLIED PER MANUFACTURE'S RECOMMENDATION. UPON ESTABLISHMENT, THE TURF SHALL BE FERTILIZED AT A RATE OF 1 LB OF ACTUAL NITROGEN PER 1000 FT. SQ. OR PER MANUFACTURE'S RECOMMENDATION. (NOTE: BAHIA TURF SHALL RECEIVE FERTILIZATION AT A HALF RATE OF THE ABOVE TURF RECOMMENDATIONS.) APPLY A 1/2 LBS. OF A PALM SPECIFIC (1 PART NITROGEN TO 1 PART POTASSIUM WITH 0.3 PARTS MAGNESIUM) FERTILIZER QUARTERLY FOR ALL ESTABLISHED PALMS PER 2' OF HEIGHT OR PER MANUFACTURE'S RECOMMENDATION.

MULCH: MATERIAL SHALL BE DARK BROWN PINE MULCH, FREE FROM WEED SEEDS, AND APPLIED TO A MINIMUM 3" DEPTH.

SEED: ALL SEED SHALL MEET FLORIDA STATE PLANT BOARD. SEED SHALL BE INSTALLED AND WATERED WITHIN 24 HOURS AFTER HARVESTING.

SUBSTITUTIONS: NO SUBSTITUTION OF ANY MATERIALS' VARIETIES, GRADES, OR SIZES SHALL BE ALLOWED WITHOUT WRITTEN AUTHORIZATION FROM THE LANDSCAPE ARCHITECT. ANY / ALL UNAUTHORIZED SUBSTITUTIONS MAY REQUIRE REPAIRING / REPLACING AT THE CONTRACTOR'S EXPENSE AND AT FLORIDA DESIGN CONSULTANTS, INC.'S DISCRETION.

WARRANTY: THE CONTRACTOR SHALL WARRANTY ALL WORKMANSHIP FOR THE PERIOD OF ONE YEAR AFTER FINAL ACCEPTANCE FROM THE OWNER AND FLORIDA DESIGN CONSULTANTS, INC. ANY DEAD, UNHEALTHY, NON-CONFORMING PLANT MATERIAL SHALL BE REPLACED AT THE CONTRACTOR'S EXPENSE WITHIN 7 DAYS OF NOTICE FROM THE OWNER OR FLORIDA DESIGN CONSULTANTS, INC. THE CONTRACTOR SHALL NOT BE LIABLE FOR "ACTS OF GOD" AND VANDALISM, NEGLIGENCE AND THEFT BY OTHERS.

QUALITY ASSURANCE: THE CONTRACTOR SHALL PROVIDE SUBSTANTIAL PROOF TO FLORIDA DESIGN CONSULTANTS, INC. THAT HE / SHE HAS A MINIMUM OF 5 YEARS EXPERIENCE IN THE FIELD OF LANDSCAPE CONTRACTING WITH PROJECTS OF SIMILAR SCOPE. THE CONTRACTOR MUST SUPPLY AT ALL TIMES ON SITE WHEN WORK IS BEING PERFORMED A QUALIFIED SUPERVISOR WITH A MINIMUM OF 18 MONTHS FIELD EXPERIENCE. ALCA LANDSCAPE CERTIFICATIONS CAN SUBSTITUTE IN LIEU OF THE EXPERIENCE REQUIREMENT AT FLORIDA DESIGN CONSULTANTS, INC.'S DISCRETION.

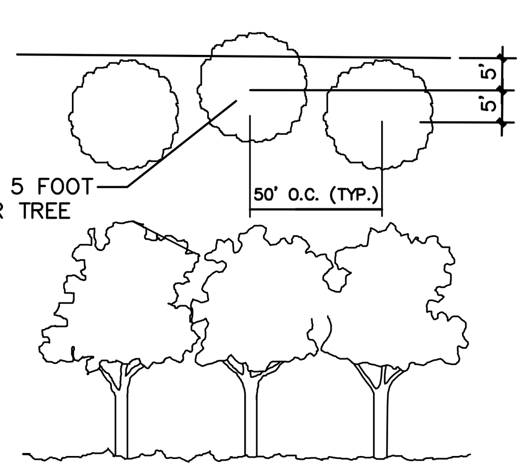

POND TREE DETAIL

GENERAL NOTES

1. LANDSCAPE PLAN REQUIREMENTS ASSOCIATED WITH THE TREE PLAN PROVIDE 1 TREE PER 30 L.F. OF TYPE "D" LANDSCAPE BUFFER ALONG RIGHT OF WAY.
2. MINIMUM OF 8 TREE SPECIES ARE REQUIRED WHEN 40 OR MORE TREES ARE REQUIRED.
3. MINIMUM TREE SIZE: 2" CALIPER, MEASURED 6' FROM GROUND.
4. THE OWNER OR OWNER'S DESIGNATED ENTITY SHALL BE RESPONSIBLE FOR MAINTENANCE OF THE TREES WITHIN COMMON AREAS.
5. TREES SHALL BE FLORIDA NO. 1 OR BETTER GRADE AS DESCRIBED IN THE FLORIDA DEPARTMENT OF AGRICULTURE AND CONSUMER SERVICES, DIVISION OF PLANT INDUSTRY, "GRADES AND STANDARDS FOR NURSERY PLANT", LATEST EDITION.
6. IRRIGATION FOR THE TREES SHALL BE PROVIDED BY EITHER A MASTER IRRIGATION SYSTEM OR INDIVIDUAL RESIDENTIAL LOT IRRIGATION SYSTEM. THE IRRIGATION SYSTEM SHALL MEET THE REQUIREMENTS OF PASCO COUNTY LANDSCAPE AND IRRIGATION ORDINANCE, 02-04. THE CONTRACTOR SHALL SUPPLY SUPPLEMENTAL WATER; OVER THE AMOUNT OF WATER SUPPLIED BY THE IRRIGATION SYSTEM, FOR THE ESTABLISHMENT OF ALL NEWLY INSTALLED TREES FOR 90 DAYS, COMMENCING IMMEDIATELY AFTER INSTALLATION. IT IS THE CONTRACTOR'S RESPONSIBILITY TO ADJUST WATERING AMOUNTS AND FREQUENCY TO ENSURE PROPER ESTABLISHMENT OF ALL PLANT MATERIAL. IRRIGATION IS NOT PART OF THIS PLAN SET.
7. TREES FOR USE ON LOTS, STREET TREES, ALONG PONDS AND WITHIN BUFFERS ARE TO BE NATIVE TREE SPECIES AS LISTED IN THE PLANT LIST.
8. TREES ALONG POND AREAS SHALL BE PLACED TO CREATE A NATURAL APPEARANCE AND PROVIDE AN AVERAGE OF 1 TREE PER 50 L.F. OF POND FRONTAGE, FOR PONDS VISIBLE FROM PUBLIC RIGHT OF WAY.
9. THE FINAL PLACEMENT OF LOT TREES SHALL BE BASED ON THE FINAL DEVELOPMENT OF THE INDIVIDUAL LOT WITH CONSIDERATIONS FOR DRIVES, SIDEWALKS, BUILDINGS, UTILITIES AND OTHER FINAL SITE/LOT CONDITIONS.
10. ALL LANDSCAPE CONSTRUCTION AND PLACEMENT SHALL CONFORM TO THE MINIMUM REQUIREMENTS OF THE PASCO COUNTY LANDSCAPE CODE.
11. THE CONTRACTOR SHALL VERIFY THE LOCATION OF ALL UTILITIES, BEFORE PERFORMING ANY WORK. CONTRACTOR SHALL NOTIFY SUNSHINE STATE ONE CALL TO VERIFY LOCATION OF ANY UTILITIES AND THE CONTRACTOR SHALL REVIEW THE ENGINEERING DRAWINGS FOR THIS PROJECT FOR ADDITIONAL INFORMATION ON POSSIBLE UTILITY LOCATIONS, HOWEVER, ALL UTILITIES MAY NOT BE SHOWN ON PLANS. CONFLICTS SHALL BE IMMEDIATELY BROUGHT TO THE ATTENTION OF THE OWNER'S REPRESENTATIVE FOR RESOLUTION.
12. EXISTING TREES, PALMS, SHRUBS AND GROUNDCOVERS WITHIN AND ADJACENT TO THE LIMITS OF CONSTRUCTION AND SPECIFIED TO REMAIN ARE TO BE PROTECTED THROUGHOUT THE CONSTRUCTION PROCESS WITH TREE BARRICADES.
13. ALL LANDSCAPE AREAS AND AROUND EXISTING TREES SHALL BE MULCHED UTILIZING SHREDDED PINE BARK NUGGETS (100% ORGANIC). MULCH SHALL BE INSTALLED TO A WETTED DEPTH OF 3". MULCH SHALL BE FREE OF EXTRANEOUS DEBRIS. MULCH SHALL NOT BE PLACED DIRECTLY AGAINST THE PLANT STEM OR TREE TRUNK.
14. THE CONTRACTOR SHALL BE RESPONSIBLE FOR ALL UNAUTHORIZED DAMAGE OR CUTTING OF EXISTING TREES TO REMAIN ON SITE. DAMAGE MAY BE CAUSED BY OPERATION OF EQUIPMENT, STOCKPILING OF MATERIALS, ETC. DAMAGE ALSO INCLUDES THE COMPACTION OF THE ROOT ZONE BY DRIVING OR PARKING INSIDE THE DRIP-LINE OF TREES OR THE SPILLAGE OF DELETERIOUS CHEMICALS, OILS, DIESEL, ETC. WITHIN THE DRIP-LINE OF TREES.
15. PLANTING AREAS SHALL BE FREE OF EXTRANEOUS MATERIALS AND CAPABLE OF PERCOLATION PRIOR TO PLANTING AND PREPARED SOIL BACKFILL.
16. SHRUBS WITHIN BUFFERS SHALL BE A MINIMUM OF 2' IN HEIGHT AND FULL TO THE BASE, PLANTED ON 6 ON CENTER.
17. TREES SHOWN DO NOT INCLUDE TREES ON INDIVIDUAL LOTS. THESE WILL BE HANDLED WITH THE INDIVIDUAL BUILDING PERMIT DRAWINGS.
18. ALL WALLS ERECTED IN RELATION TO REQUIRED BUFFERS SHALL BE OF UNIFORM CONSTRUCTION AND APPEARANCE, AND SHALL BE ERECTED AND MAINTAINED IN GOOD REPAIR SO AS TO NOT POSE A HAZARD OR EYESORE

REQUIRED NUMBER OF TREES	REQUIRED SPECIES
1-5	1
6-10	2
11-15	3
16-20	4
21-25	5
26-30	6
31-35	7
35 or more	8

OVERALL EPPERSON RANCH SOUTH TREE REMOVAL DEFICIT (in inches)		13,462
Per 10/08/14 Tree Removal Permit		
Credits for Tree Replacment: (in inches)		
Overpass Road	60	
Crystal Lagoon	136	
Park Place Blvd., Phase 1	15	
Total Credits for Overpass Road, Crystal Lagoon and Park Place Blvd.		211
Remaining Tree Removal Deficit (in inches)		13,251

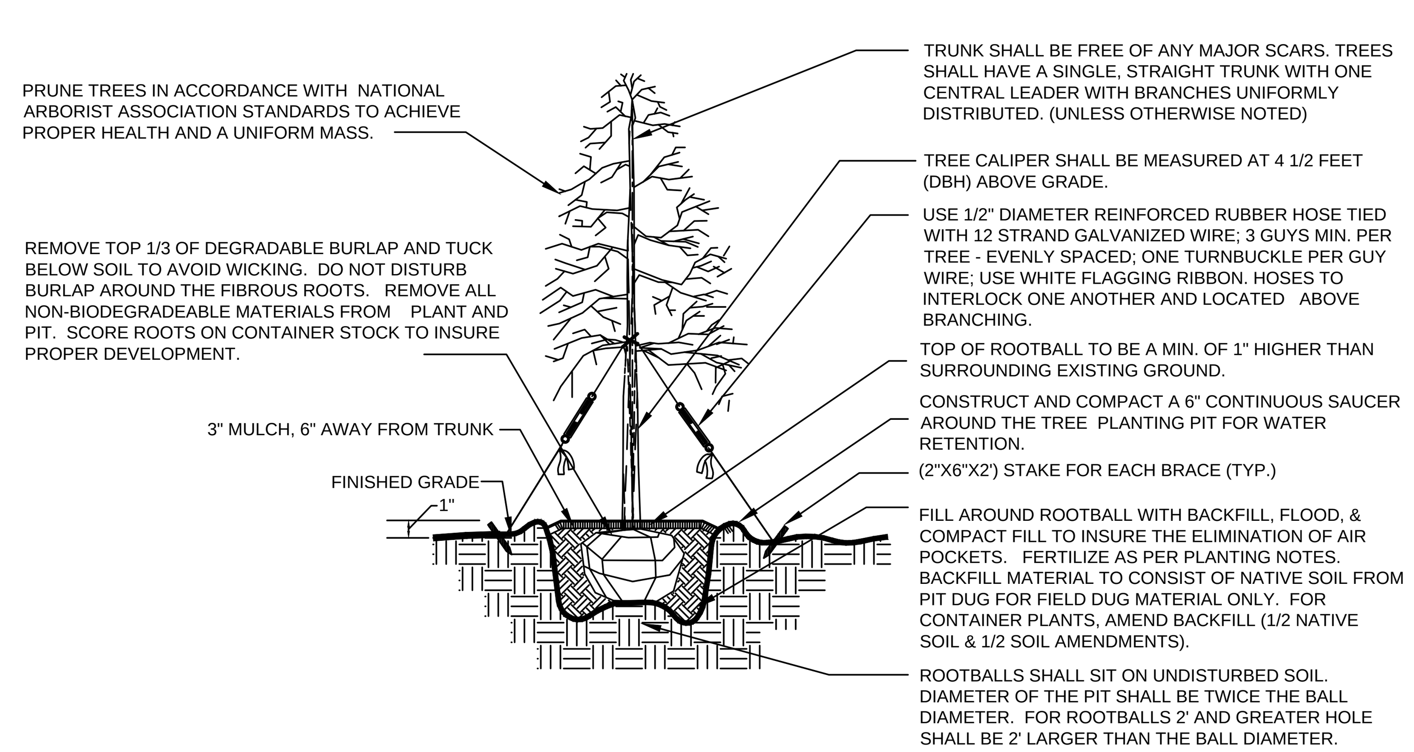

2 TYPICAL SINGLE TRUNK TREE PLANTING

N.T.S.

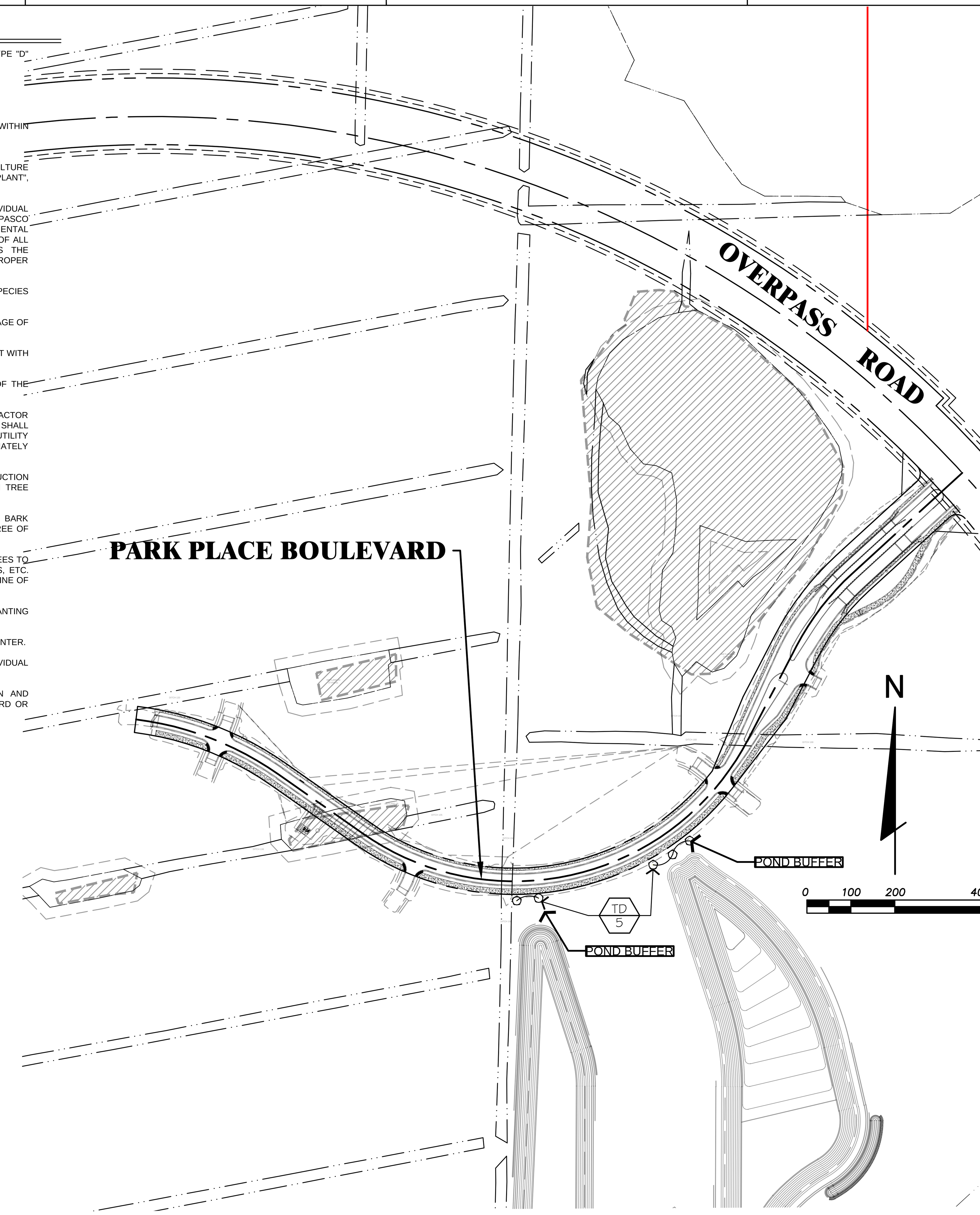

PLANT SCHEDULE

TREES	QTY	BOTANICAL NAME / COMMON NAME	CAL	SIZE	Native	Drought Tolerant
(symbol)	5	TAXODIUM DISTICHUM / BALD CYPRESS	3"CAL	MIN. 8' HT	Y	Y

Tree Replacement Schedule			
Tree Type	Number	DBI	Replacement DBI
Taxodium Distichum (Bald Cypress)	5	3"	15"
Totals	5		*15"

* For the additional 36" of replacement trees the developer will either pay into the County's tree bank or plant the remaining replacement trees at an approved location.

TREE REMOVAL - REPLACEMENT TABLE

Type	Size (Inches)	No.	Total Inches On Site	To Be Saved No.	To Be Saved Inches	To Be Removed No.	To Be Removed Inches	Required Replacements 1:1	Required Replacements 1:3
Oak	10	143	1,430	30	300	113	1,130	1,130	
	11	99	1,089	19	209	80	880	880	
	12	109	1,308	27	324	82	984	984	
	13	85	1,105	18	234	67	871	871	
	14	68	952	12	168	56	784	784	
	15	72	1,080	14	210	58	870	870	
	16	47	752	7	112	40	640	640	
	17	39	663	8	136	31	527	527	
	18	55	990	15	270	40	720	720	
	19	50	950	8	152	42	798	798	
	20	39	780	6	120	33	660	660	
	21	32	672	4	84	28	588	588	
	22	31	682	3	66	28	616	616	
	23	19	437	2	46	17	391	391	
	24	23	552	5	120	18	432	432	
	25	17	425	1	25	16	400	400	
	26	18	468	1	26	17	442	442	
	27	5	135	2	54	3	81	81	
	28	10	280	1	28	9	252	252	
	29	3	87	0	0	3	87	87	
	30	4	120	0	0	4	120	120	
	31	3	93	0	0	3	93	93	
	32	5	160	0	0	5	160	160	
	33	6	198	1	33	5	165	165	
	34	2	68	2	68	0	0	0	
	35	3	105	0	0	3	105	105	
	36	2	72	1	36	1	36	36	
	37	4	148	1	37	3	111	111	
	38	2	76	1	38	1	38	38	
	39	1	39	1	39	0	0	0	
	42	2	84	0	0	2	84	84	
	43	1	43	1	43	0	0	0	
	Total	**999**	**16,043**	**191**	**2,978**	**808**	**13,065**	**13,065**	**0**
Maple	10	6	60	2	20	4	40		13 1/3
	11	3	33	1	11	2	22		7 1/3
	12	2	24	1	12	1	12		4
	13	4	52	3	39	1	13		4 1/3
	14	3	42	2	28	1	14		4 2/3
	15	2	30	1	15	1	15		5
	18	2	36	1	18	1	18		6
	20	1	20	1	20	0	0		0
	21	1	21	0	0	1	21		7
	23	1	23	1	23	0	0		0
	Total	**25**	**341**	**13**	**186**	**12**	**155**	**0**	**51 2/3**
Cedar	11	2	22	0	0	2	22		7 1/3
	14	1	14	0	0	1	14		4 2/3
	18	1	18	0	0	1	18		6
	Total	**4**	**54**	**0**	**0**	**4**	**54**	**0**	**18**
China Berry	10	12	120	0	0	12	120		40
	11	5	55	0	0	5	55		18 1/3
	12	4	48	0	0	4	48		16
	13	1	13	0	0	1	13		4 1/3
	14	4	56	0	0	4	56		18 2/3
	15	3	45	0	0	3	45		15
	16	2	32	0	0	2	32		10 2/3
	Total	**31**	**369**	**0**	**0**	**31**	**369**	**0**	**123**
Camphor	10	4	40	0	0	4	40		
	11	1	11	0	0	1	11		
	12	5	60	1	12	4	48		
	13	1	13	0	0	1	13		
	14	2	28	0	0	2	28		
	17	2	34	0	0	2	34		
	19	1	19	0	0	1	19		
	21	1	21	1	21	0	0		
	32	1	32	0	0	1	32		
	Total	**18**	**258**	**2**	**33**	**16**	**225**	**0**	**0**
Bay	10	3	30	1	10	2	20		6 2/3
	11	2	22	1	11	1	11		3 2/3
	12	3	36	2	24	1	12		4
	15	1	15	0	0	1	15		5
	Total	**9**	**103**	**4**	**45**	**5**	**58**	**0**	**19 1/3**
Black Cherry	10	15	150	1	10	14	140		46 2/3
	11	5	55	1	11	4	44		14 2/3
	12	7	84	0	0	7	84		28
	13	3	39	0	0	3	39		13
	14	2	28	0	0	2	28		9 1/3
	15	1	15	0	0	1	15		5
	16	1	16	0	0	1	16		5 1/3
	17	1	17	0	0	1	17		5 2/3
	30	1	30	0	0	1	30		10
	Total	**36**	**434**	**2**	**21**	**34**	**413**	**0**	**137 2/3**
Palm	10	1	10	0	0	1	10		
	12	1	12	0	0	1	12		
	13	2	26	0	0	2	26		
	14	8	112	0	0	8	112		
	15	6	90	0	0	6	90		
	16	4	64	0	0	4	64		
	17	5	85	0	0	5	85		
	18	7	126	0	0	7	126		
	19	3	57	0	0	3	57		
	20	1	20	0	0	1	20		
	21	1	21	0	0	1	21		
	23	1	23	0	0	1	23		
	24	2	48	0	0	2	48		
	Total	**42**	**694**	**0**	**0**	**42**	**694**	**0**	**0**
Pine	19	1	19	0	0	1	19		6 1/3
	21	1	21	1	21	0	0		0
	22	1	22	0	0	1	22		7 1/3
	Total	**3**	**62**	**1**	**21**	**2**	**41**	**0**	**13 2/3**
Sweet Gum	10	5	50	1	10	4	40		13 1/3
	11	2	22	1	11	1	11		3 2/3
	12	1	12	1	12	0	0		0
	15	1	15	0	0	1	15		5
	21	1	21	0	0	1	21		7
	25	1	25	1	25	0	0		0
	Total	**11**	**145**	**4**	**58**	**7**	**87**	**0**	**29**
Unknown	15	1	15	0	0	1	15		5
	Total	**1**	**15**	**0**	**0**	**1**	**15**	**0**	**5**
Total Required Replacement (Inches)								13,462	

STUART M. ROGERS LICENSE NO. 42718 STATE OF FLORIDA PROFESSIONAL ENGINEER

12-2-2014

JOB NO. 0597-0025
EPN 137
DATE 8-8-2014
DESIGNED JD
DRAWN AH
CHECKED SR
Q.C.

NO. DATE REVISIONS APP'D BY

DESIGNED FOR
EPPERSON RANCH, LLC
2502 NORTH ROCKY POINT DRIVE, SUITE 1050, TAMPA, FLORIDA 33607
PHONE: (813) 288-8078

PROJECT NAME
PARK PLACE ENTRANCE ROAD

SHEET NAME
LANDSCAPING PLAN & NOTES

FLORIDA DESIGN CONSULTANTS, INC.
THINK IT. ACHIEVE IT.
707 N. FRANKLIN STREET, 6TH FLOOR, TAMPA, FLORIDA 34655
PHONE: (800) 532 - 1047 FAX: (727) 848 - 3648 WWW.FLDESIGN.COM C.A. NO. 7421

SHEET 19 OF 19

©Copyright 2014 Florida Design Consultants, Inc. Drawings and concepts may not be used or reproduced without written permission.

K:\137\PROJDATA\ConstDocs\PLANS\EPPERSON RANCH BLVD\137_TREE-ERB.dwg – Dec 23, 2014 @ 3:50pm – ahulbert
K:\137\PROJDATA\ConstDocs\PLANS\EPPERSON RANCH BLVD\137_TREE-ERB.dwg, Layout1, 12/23/2014 3:50:11 PM, ahulbert