PASCO COUNTY ZONING AND SITE DEVELOPMENT SUBMITTAL APPLICATION FORM PRELIMINARY/CONSTRUCTION/STORMWATER MANAGEMENT PLAN

PROJECT NAME: Asturia Promenade Parkway

PROJECT NO. (FROM DEVELOPMENT REVIEW DIVISION): _____

X OWNER:
NAME: Asturia Community Development District/Lane Gardner, Chairman
ADDRESS: 605 Palencia Club Drive
St. Augustine, FL 32095
TELEPHONE NO.: (904) 810 - 0520
E-MAIL: sean.manson@hines.com

_____ DEVELOPER:
NAME: _____
ADDRESS: _____
TELEPHONE NO.: (_____) _____ - _____
E-MAIL: _____

X AUTHORIZED REPRESENTATIVE AND TITLE:
NAME: Florida Design Consultants, Inc./Paul E. Skidmore, P.E.
ADDRESS: 3030 Starkey Boulevard
New Port Richey, FL 34655
TELEPHONE NO.: (727) 849 - 7588
E-MAIL: pskidmore@fldesign.com

X ENGINEER:
NAME: Florida Design Consultants, Inc./Paul E. Skidmore, P.E.
ADDRESS: 3030 Starkey Boulevard
New Port Richey, FL 34655
TELEPHONE NO.: (727) 849 - 7588
E-MAIL: pskidmore@fldesign.com

NOTE: Indicate above with an "X" who will receive all correspondence concerning this submission and be responsible for actions concerning the review and approval process. All others will receive copies of the correspondence.

Type of review/approval being sought (reference Section 303, Common Procedures, Pasco County Land Development Code):

PSP-Small:
- Preliminary Site Plan _____
- Construction Site Plan _____
- Stormwater Management Plan and Report _____
- Simultaneous _____

PSP-Large:
- Preliminary Site Plan _____
- Construction Site Plan _____
- Stormwater Management Plan and Report _____
- Simultaneous X

MRS/LFLD:
- Preliminary Development Plan _____
- Stormwater Management Plan and Report _____
- Construction Plan _____
- Simultaneous _____

PDP:
- Preliminary Development Plan _____
- Stormwater Management Plan and Report _____
- Construction Plan _____
- Simultaneous _____

Fee: $10,000

OTHER: _____

DATE STAMP (FOR OFFICE USE ONLY)

SUBMITTED BY: Florida Design Consultants, Inc.

NAME: Paul E. Skidmore, P.E. (Print)

SIGNATURE: _____

E-MAIL: pskidmore@fldesign.com

FLORIDA DESIGN
CONSULTANTS, INC.
THINK IT. ACHIEVE IT.

3030 Starkey Boulevard
New Port Richey, Florida 34655

707 N. Franklin Street, 6th Floor
Tampa, FL 33602

800.532.1047
www.fldesign.com

May 29, 2015

Ms. Michele L. Crary
West Pasco Government Center
8731 Citizens Drive, Suite 230
New Port Richey, FL 34654

RE: Asturia - Promenade Parkway Extension
Preliminary/Construction/Stormwater Plans
Pasco County Content Review Package

Dear Michele:

On behalf of our Client, Asturia Community Development District, Florida Design Consultants, Inc. (FDC) is submitting the Content Review package for the above referenced project.

Asturia, Promenade Parkway is a roadway extension through the Asturia MPUD. This roadway lies within the TND portion of the MPUD. The design is for approximately ½ mile of a 2-lane roadway, Type 1B and A. The construction plans will provide the design for stormwater management, storm conveyance, roadways, water distribution, reclaimed water and wastewater collection system, including Lift Station. There are no trees within the project area. Minimum Code Landscape Plans have been prepared and are part of the Construction Plans. Excavated material generated from the construction of the stormwater ponds will remain on-site; no material will leave the site. Per Pasco County Staff, no pre-application meeting was required.

Enclosed find the following:

1. One (1) CD containing pdf copies of the entire content review package, including CAD Drawing.
2. Two (2) signed and sealed set of Preliminary/Construction Stormwater Plans.
3. One (1) completed copy of the Pasco County Submittal Application Form.
4. One (1) completed copy of the Pasco County Content Checklist for Preliminary Site Plan, Construction Plan, and Stormwater Plan Developments Simultaneous Submittal (PSPCPSW) - Commercial.
5. Agent of Record Letter.
6. One (1) check in the amount of $10,000 made payable to the Pasco County Board of County Commissioners (BOCC) for the review fee.
7. One (1) copy of the Deed.
8. One (1) copy of the Location Map Aerial.

9. One (1) copy of the Site Plan Aerial Photo (8½" x 14" size).
10. One (1) copy of the 200-scale Site Map.
11. One (1) copy of the Access Connection Permit Application.
12. Pasco County Stormwater Review Checklist.
13. Preliminary Wildlife and Habitat Assessment.
14. One (1) copy each of the Geotechnical Report as prepared by Universal.
15. Substandard Road Review Application (if required).
16. Asturia Pump Station PS-2 Design Report.

If you have any comments or questions, please contact me at (727) 849-7588 or pskidmore@fldesign.com.

Sincerely,

Paul E. Skidmore, P.E.
Vice President of Engineering

j:\admin\project_docs\asturia fka behnke property - hines\letters\crary-asturia-promenade pkwy ext.docx

Enclosures

c: File 0597-0017-40.01

Asturia

PROMENADE PARKWAY - SIMULTANEOUS SUBMITTAL

LOCATED IN PART OF
SECTIONS 25 & 26, TOWNSHIP 26 SOUTH, RANGE 17 EAST
PASCO COUNTY, FLORIDA

VICINITY MAP

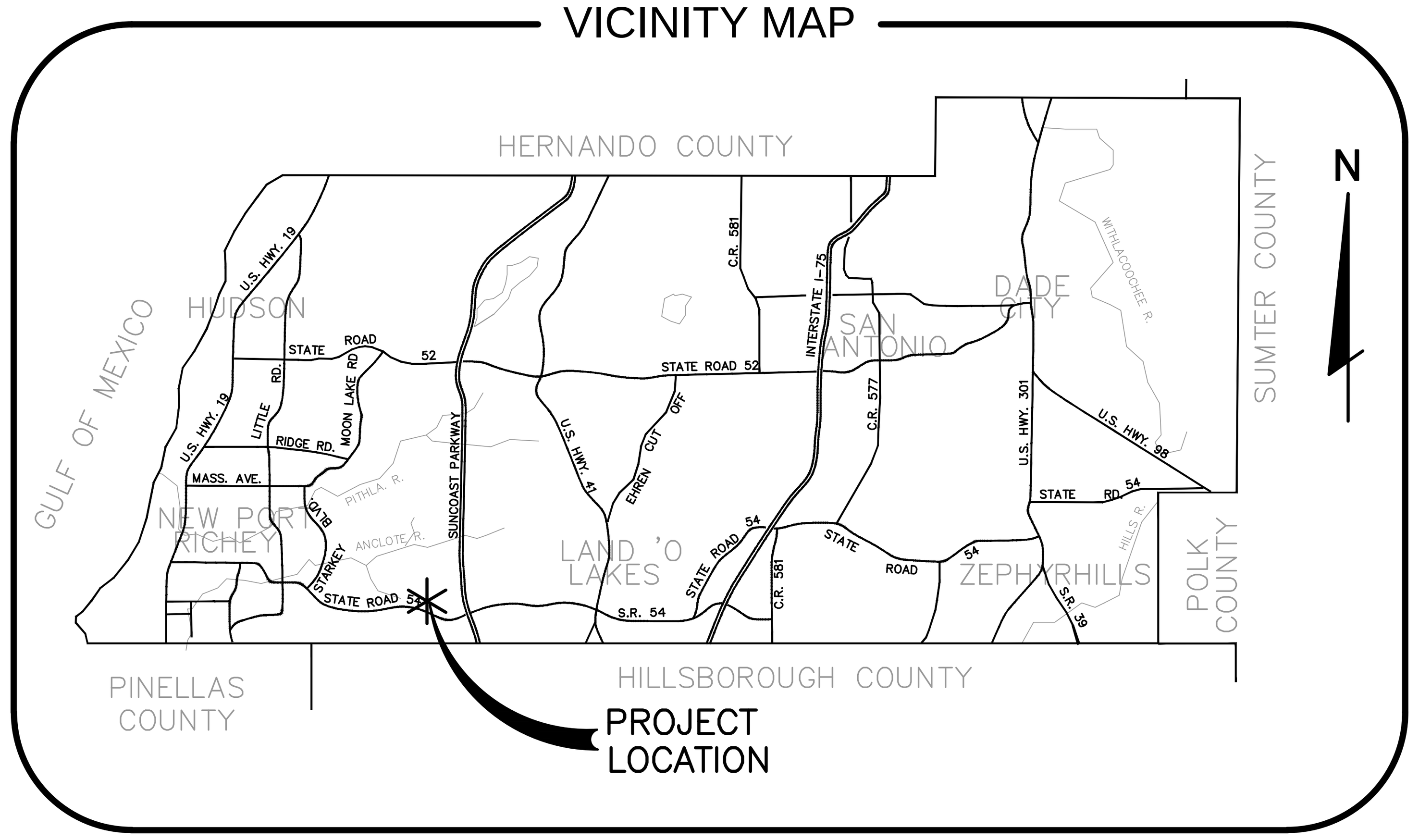

LOCATION MAP

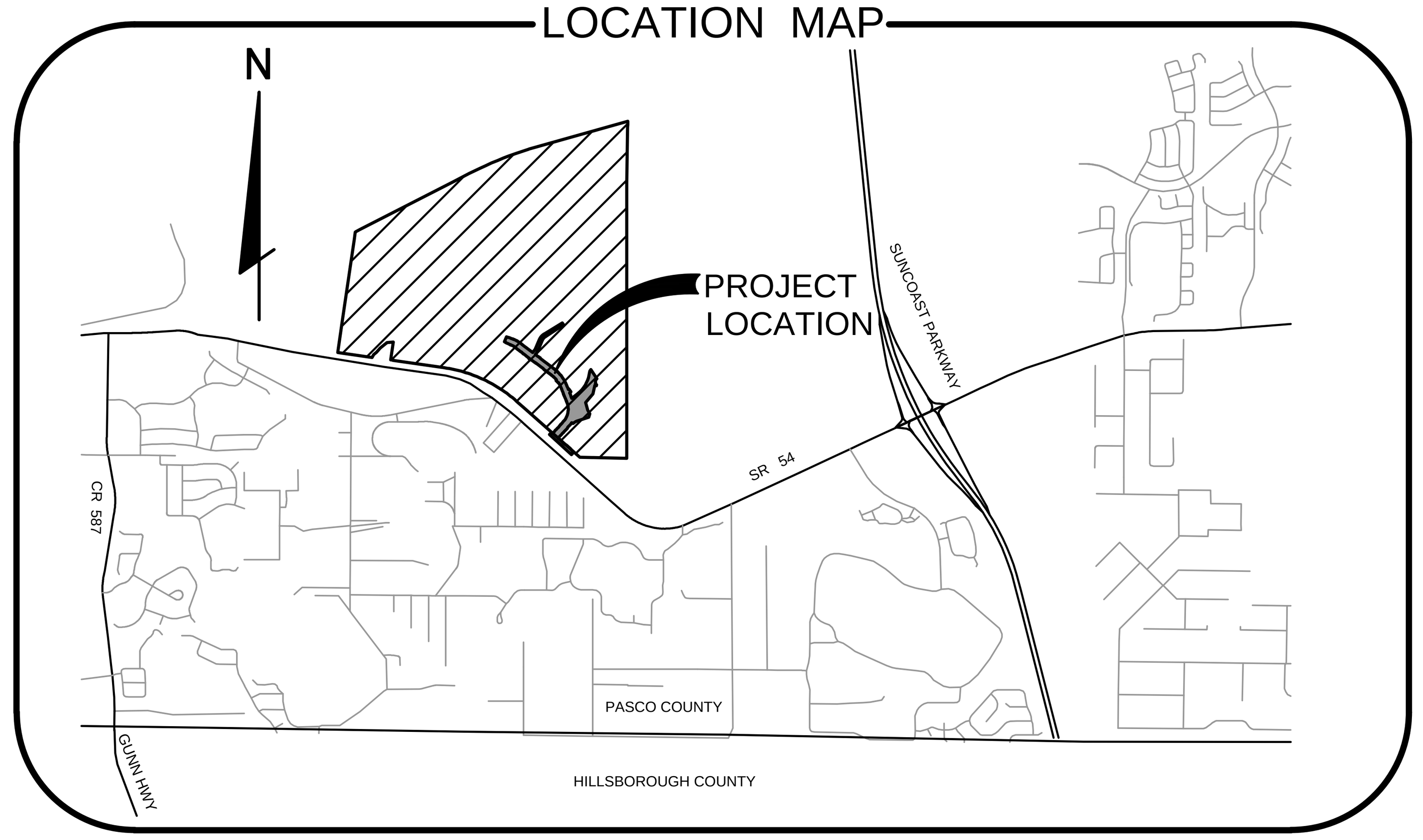

DRAWING INDEX

1	COVER SHEET
2	GENERAL NOTES
3	TYPICAL SECTIONS AND DETAILS
4	HORIZONTAL CONTROL PLAN
5-6	OVERALL DRAINAGE AND STORMWATER POLLUTION PREVENTION PLAN
* 7	OVERALL UTILITY PLAN
8-14	CONSTRUCTION PLANS
15-20	ROADWAY PROFILES
21-24	SR-54 TURN LANE CROSS SECTIONS
25	POND GRADING PLANS
26	STORM SEWER OUTFALL PLAN
* 27-28	SANITARY SEWER PUMP STATION PLAN AND DETAILS
* 29-32	SIGNAGE AND PAVEMENT MARKING PLANS
33-35	PAVING, GRADING AND DRAINAGE DETAILS
* 36-38	UTILITY DETAILS
LP1 - LP12	LANDSCAPE PLANS (BY PROSSER)

* SHEETS NOT INCLUDED IN SWFWMD SUBMITTAL

LEGAL DESCRIPTION

A PARCEL OF LAND BEING A PORTION OF SECTIONS 25 AND 26, TOWNSHIP 26 SOUTH, RANGE 17 EAST, PASCO COUNTY, FLORIDA, BEING MORE PARTICULARLY DESCRIBED AS FOLLOWS:

COMMENCE AT THE EAST 1/4 CORNER OF SECTION 24, TOWNSHIP 26 SOUTH, RANGE 17 EAST, PASCO COUNTY, FLORIDA; THENCE S00°12'05"W ALONG THE EAST LINE OF THE SOUTHEAST 1/4 OF SAID SECTION 24 (BEING THE BASIS OF BEARINGS FOR THIS LEGAL DESCRIPTION), FOR 428.33 FEET TO THE POINT OF INTERSECTION WITH THE NORTHERLY LINE OF THE FORMER SEABOARD COASTLINE RAILROAD RIGHT-OF-WAY; THENCE S72°52'02"W ALONG SAID NORTHERLY LINE OF THE FORMER SEABOARD COASTLINE RAILROAD RIGHT-OF-WAY, FOR 3,463.77 FEET; THENCE LEAVING SAID NORTHERLY LINE OF THE FORMER SEABOARD COASTLINE RAILROAD RIGHT-OF-WAY, S00°23'37"W ALONG A LINE 3,309.55 FEET WEST OF AND PARALLEL WITH THE EAST LINE OF SECTION 25, TOWNSHIP 26 SOUTH, RANGE 17 EAST, PASCO COUNTY, FLORIDA, FOR 3,825.02 FEET; THENCE CONTINUE S00°16'14"W ALONG SAID LINE 3,309.55 FEET WEST OF AND PARALLEL WITH THE EAST LINE OF SECTION 25, FOR 3,277.64 FEET TO THE POINT OF INTERSECTION WITH THE SOUTHERLY LINE OF THE FORMER TRACT 2 ACCORDING TO THE PLAT OF REVISED MAP OF KEYSTONE PARK COLONY, AS RECORDED IN PLAT BOOK 1, PAGE 64, AS VACATED BY RESOLUTION DATED APRIL 25, 2006 AND RECORDED IN OFFICIAL RECORDS BOOK 6985, PAGE 2, ALL OF THE PUBLIC RECORDS OF PASCO COUNTY, FLORIDA; THENCE LEAVING SAID LINE 3,309.55 FEET WEST OF AND PARALLEL WITH THE EAST LINE OF SECTION 25, N89°08'18"W ALONG SAID SOUTHERLY LINE OF THE FORMER TRACT 2, FOR 133.59 FEET TO THE POINT OF INTERSECTION WITH THE NORTHERLY RIGHT-OF-WAY LINE OF STATE ROAD 54, ACCORDING TO THAT CERTAIN STATE OF FLORIDA DEPARTMENT OF TRANSPORTATION RIGHT-OF-WAY MAP FOR STATE ROAD 54, W.P. ITEM/SEG.: 256337-1, PREPARED BY CUMBY AND FAIR, INC., DATED 10-13-1999, SAME BEING THE POINT OF INTERSECTION WITH A NON-TANGENT CURVE CONCAVE NORTHEASTERLY; THENCE NORTHWESTERLY ALONG THE ARC OF SAID CURVE FROM A RADIAL BEARING OF S40°19'04"W, HAVING A RADIUS OF 1,785.19 FEET, A CENTRAL ANGLE OF 01°20'58", AN ARC LENGTH OF 42.04 FEET, AND A CHORD BEARING N49°00'27"W, FOR 42.04 FEET TO THE POINT OF TANGENT; THENCE N48°21'18"W ALONG SAID NORTHERLY RIGHT-OF-WAY LINE OF STATE ROAD 54, FOR 216.61 FEET TO THE POINT OF BEGINNING; THENCE CONTINUE ALONG THE NORTHERLY RIGHT-OF-WAY LINE OF STATE ROAD 54, N48°21'18"W, FOR 230.00 FEET; THENCE LEAVING SAID NORTHERLY RIGHT-OF-WAY LINE OF SAID STATE ROAD 54, N41°38'42"E, FOR 30.00 FEET; THENCE S48°21'18"E, FOR 100.00 FEET; THENCE N41°38'42"E, FOR 35.00 FEET; THENCE S48°21'18"E, FOR 40.00 FEET; THENCE N41°38'42"E, FOR 249.09 FEET TO THE POINT OF CURVATURE OF A CURVE CONCAVE WESTERLY; THENCE NORTHERLY ALONG THE ARC OF SAID CURVE, HAVING A RADIUS OF 330.00 FEET, A CENTRAL ANGLE OF 64°33'58", AN ARC LENGTH OF 371.87 FEET, AND A CHORD BEARING N09°21'43"E FOR 352.51 FEET TO THE POINT OF TANGENT; THENCE N22°55'16"W, FOR 335.02 FEET TO THE POINT OF CURVATURE OF A CURVE CONCAVE SOUTHWESTERLY; THENCE NORTHWESTERLY ALONG THE ARC OF SAID CURVE, HAVING A RADIUS OF 625.00 FEET, A CENTRAL ANGLE OF 31°08'15", AN ARC LENGTH OF 339.66 FEET, AND A CHORD BEARING N38°29'24"W FOR 335.49 FEET TO THE POINT OF TANGENT; THENCE N54°03'32"W, FOR 872.49 FEET TO THE POINT OF CURVATURE OF A CURVE CONCAVE SOUTHWESTERLY; THENCE NORTHWESTERLY ALONG THE ARC OF SAID CURVE, HAVING A RADIUS OF 220.00 FEET, A CENTRAL ANGLE OF 14°48'29", AN ARC LENGTH OF 56.86 FEET, AND A CHORD BEARING N61°27'46"W FOR 56.70 FEET TO THE POINT OF TANGENT; THENCE N68°52'01"W, FOR 177.02 FEET TO THE SOUTHEAST CORNER OF PROPOSED ASTURIA PHASE 1D; THENCE N21°07'59"E, ALONG THE EASTERLY LINE OF SAID PROPOSED ASTURIA PHASE 1D, FOR 90.00 FEET; THENCE LEAVING SAID EASTERLY LINE OF PROPOSED ASTURIA PHASE 1D, S23°52'01"E, FOR 14.14 FEET; THENCE S68°52'01"E, FOR 167.02 FEET TO THE POINT OF CURVATURE OF A CURVE CONCAVE SOUTHWESTERLY; THENCE SOUTHEASTERLY ALONG THE ARC OF SAID CURVE, HAVING A RADIUS OF 300.00 FEET, A CENTRAL ANGLE OF 13°09'20", AN ARC LENGTH OF 68.88 FEET, AND A CHORD BEARING S62°17'21"E FOR 68.73 FEET TO THE POINT OF INTERSECTION WITH A NON-TANGENT LINE; THENCE N73°11'18"E, FOR 12.30 FEET; THENCE N21°07'59"E, FOR 16.90 FEET; THENCE S54°03'32"E, FOR 65.16 FEET; THENCE S21°07'59"W, FOR 16.89 FEET; THENCE S16°27'46"E, FOR 15.85 FEET; THENCE S54°03'32"E, FOR 237.55 FEET; THENCE N73°32'14"E, FOR 12.20 FEET; THENCE N21°07'59"E, FOR 16.89 FEET; THENCE S54°03'32"E, FOR 65.16 FEET; THENCE S21°07'59"W, FOR 16.89 FEET; THENCE S16°27'46"E, FOR 15.85 FEET; THENCE S54°03'32"E, FOR 228.24 FEET; THENCE N73°32'14"E, FOR 12.20 FEET; THENCE N21°07'59"E, FOR 16.89 FEET; THENCE S54°03'32"E, FOR 65.16 FEET; THENCE S21°07'59"W, FOR 16.89 FEET; THENCE S16°27'46"E, FOR 15.85 FEET; THENCE S54°03'32"E, FOR 159.85 FEET TO THE POINT OF CURVATURE OF A CURVE CONCAVE SOUTHWESTERLY; THENCE SOUTHEASTERLY ALONG THE ARC OF SAID CURVE, HAVING A RADIUS OF 705.00 FEET, A CENTRAL ANGLE OF 12°38'25", AN ARC LENGTH OF 155.53 FEET, AND A CHORD BEARING S47°44'19"E FOR 155.22 FEET TO THE POINT OF REVERSE CURVATURE OF A CURVE CONCAVE NORTHERLY; THENCE EASTERLY ALONG THE ARC OF SAID CURVE, HAVING A RADIUS OF 20.00 FEET, A CENTRAL ANGLE OF 86°46'55", AN ARC LENGTH OF 30.29 FEET, AND A CHORD BEARING S84°48'34"E FOR 27.48 FEET TO THE POINT OF TANGENT; THENCE N51°47'58"E, FOR 6.85 FEET TO THE POINT OF INTERSECTION WITH A NON-TANGENT CURVE, CONCAVE SOUTHWESTERLY; THENCE SOUTHEASTERLY ALONG THE ARC OF SAID CURVE, WITH A RADIAL BEARING OF S50°10'37"W, HAVING A RADIUS OF 731.00 FEET, A CENTRAL ANGLE OF 04°42'16", AN ARC LENGTH OF 60.02 FEET, AND A CHORD BEARING S37°28'15"E FOR 60.00 FEET TO THE POINT OF INTERSECTION WITH A NON-TANGENT LINE; THENCE S51°47'58"W, FOR 7.37 FEET TO THE POINT OF CURVATURE OF A CURVE CONCAVE EASTERLY; THENCE SOUTHERLY ALONG THE ARC OF SAID CURVE, HAVING A RADIUS OF 20.00 FEET, A CENTRAL ANGLE OF 85°18'30", AN ARC LENGTH OF 29.78 FEET, AND A CHORD BEARING S09°08'43"W FOR 27.10 FEET TO THE POINT OF REVERSE CURVATURE OF A CURVE CONCAVE SOUTHWESTERLY; THENCE SOUTHEASTERLY ALONG THE ARC OF SAID CURVE, HAVING A RADIUS OF 705.00 FEET, A CENTRAL ANGLE OF 10°35'15", AN ARC LENGTH OF 130.28 FEET, AND A CHORD BEARING S28°12'54"E FOR 130.09 FEET TO THE POINT OF TANGENT; THENCE S22°55'16"E, FOR 60.38 FEET TO THE POINT OF CURVATURE OF A CURVE CONCAVE NORTHERLY; THENCE EASTERLY ALONG THE ARC OF SAID CURVE, HAVING A RADIUS OF 20.00 FEET, A CENTRAL ANGLE OF 105°16'45", AN ARC LENGTH OF 36.75 FEET, AND A CHORD BEARING S75°33'39"E FOR 31.79 FEET TO THE POINT OF TANGENT; THENCE N51°47'58"E, FOR 13.43 FEET; THENCE S37°26'32"E, FOR 60.01 FEET; THENCE S51°47'58"W, FOR 39.96 FEET TO THE POINT OF CURVATURE OF A CURVE CONCAVE EASTERLY; THENCE SOUTHERLY ALONG THE ARC OF SAID CURVE, HAVING A RADIUS OF 20.00 FEET, A CENTRAL ANGLE OF 74°43'15", AN ARC LENGTH OF 26.08 FEET, AND A CHORD BEARING S14°26'20"W FOR 24.27 FEET TO THE POINT OF TANGENT; THENCE S22°55'16"E, FOR 109.13 FEET; THENCE N51°47'58"E, FOR 137.01 FEET TO THE POINT OF CURVATURE OF A CURVE CONCAVE NORTHWESTERLY; THENCE NORTHEASTERLY ALONG THE ARC OF SAID CURVE, HAVING A RADIUS OF 645.00 FEET, A CENTRAL ANGLE OF 42°10'06", AN ARC LENGTH OF 474.71 FEET, AND A CHORD BEARING N30°42'55"E FOR 464.06 FEET TO THE POINT OF TANGENT; THENCE N09°37'52"E, FOR 74.56 FEET TO THE POINT OF CURVATURE OF A CURVE CONCAVE SOUTHEASTERLY; THENCE NORTHEASTERLY ALONG THE ARC OF SAID CURVE, HAVING A RADIUS OF 55.00 FEET, A CENTRAL ANGLE OF 31°13'32", AN ARC LENGTH OF 29.97 FEET, AND A CHORD BEARING N25°14'38"E FOR 29.60 FEET TO THE POINT OF INTERSECTION WITH A NON-TANGENT LINE; THENCE S41°31'33"E, FOR 280.56 FEET; THENCE S12°16'12"W, FOR 823.16 FEET; THENCE S87°13'10"W, FOR 327.82 FEET; THENCE N48°21'18"W, FOR 58.82 FEET TO THE POINT OF INTERSECTION WITH A NON-TANGENT CURVE, CONCAVE NORTHWESTERLY; THENCE SOUTHWESTERLY ALONG THE ARC OF SAID CURVE, WITH A RADIAL BEARING OF N62°17'56"W, HAVING A RADIUS OF 410.00 FEET, A CENTRAL ANGLE OF 13°56'38", AN ARC LENGTH OF 99.78 FEET, AND A CHORD BEARING S34°40'23"W FOR 99.53 FEET TO THE POINT OF TANGENT; THENCE S41°38'42"W, FOR 39.20 FEET TO THE POINT OF CURVATURE OF A CURVE CONCAVE EASTERLY; THENCE SOUTHERLY ALONG THE ARC OF SAID CURVE, WITH A RADIAL BEARING OF S48°21'19"E, HAVING A RADIUS OF 20.00 FEET, A CENTRAL ANGLE OF 90°00'00", AN ARC LENGTH OF 31.42 FEET, AND A CHORD BEARING S03°21'18"E FOR 28.28 FEET TO THE POINT OF TANGENT; THENCE S48°21'18"E, FOR 10.00 FEET; THENCE S41°38'42"W, FOR 60.00 FEET TO THE POINT OF INTERSECTION WITH A NON-TANGENT CURVE, CONCAVE SOUTHERLY; THENCE WESTERLY ALONG THE ARC OF SAID CURVE, WITH A RADIAL BEARING OF S41°38'42"W, HAVING A RADIUS OF 20.00 FEET, A CENTRAL ANGLE OF 90°00'00", AN ARC LENGTH OF 31.42 FEET, AND A CHORD BEARING S86°38'42"W FOR 28.28 FEET TO THE POINT OF TANGENT; THENCE S41°38'42"W, FOR 174.89 FEET TO THE POINT OF BEGINNING.

CONTAINING 539,776 SQUARE FEET OR 12.392 ACRES, MORE OR LESS.

SITE DATA

ASTURIA - PROMENADE PARKWAY

PROJECT TYPE:	ROADWAY EXTENSION
PASCO COUNTY PARCEL I.D. #'S:	26-26-17-0000-00200-0034 25-26-17-0000-00100-0021
EXISTING ZONING:	LEGACY MPUD #6668 APPROVED 12/2009
FUTURE LAND USE:	RES-3
CURRENT USE:	VACANT
PROJECT AREA:	14.34 ACRES
CLASS III WETLAND AREA:	0.15 ACRES (WITHIN PROJECT AREA)
PROPOSED WETLAND IMPACTS:	0.15 ACRES (WITHIN PROJECT AREA)

MITIGATION PROVIDED AS PART OF ASTURIA PHASE 1 PLAN

ROADS: THE PROPOSED ROADWAYS ARE TO BE OWNED & MAINTAINED BY ASTURIA CDD AND ASSESSABLE TO THE PUBLIC.

THE PLAN HAS BEEN CERTIFIED BY THE DESIGN ENGINEER TO BE IN SUBSTANTIAL CONFORMANCE WITH THE LATEST EDITION OF THE "MANUAL OF UNIFORM MINIMUM STANDARDS FOR DESIGN, CONSTRUCTION AND MAINTENANCE FOR STREETS AND HIGHWAYS" AS REQUIRED BY SECTION 336.045 FLORIDA STATUTES.

811 Know what's below. Call before you dig.

FLA. STATUTE 553.851 (1979) REQUIRES A MIN. OF 2 DAYS AND A MAX. OF 5 DAYS NOTICE BEFORE YOU EXCAVATE.

ELEVATIONS SHOWN HEREON ARE BASED ON NAVD 1988 DATUM. TO CONVERT TO NGVD 1929 DATUM, ADD 0.83'.

PAUL E. SKIDMORE LICENSE NO. 39631 STATE OF FLORIDA PROFESSIONAL ENGINEER

JOB NO.	EPN	DATE	DESIGNED	DRAWN	CHECKED	Q.C.
506-100C	213	5-1-2015	RAH	RAH	PES	

REVISIONS: NO. | DATE | APP'D BY

DESIGNED FOR
ASTURIA COMMUNITY DEVELOPMENT DISTRICT
605 PALENCIA CLUB DRIVE, ST. AUGUSTINE, FLORIDA 32095
PHONE: (904) 810-0500 - FAX: (904) 810-0525

PROJECT NAME: Asturia | PROMENADE PARKWAY

SHEET NAME: COVER SHEET

FLORIDA DESIGN CONSULTANTS, INC.
THINK IT. ACHIEVE IT.
3030 STARKEY BOULEVARD, NEW PORT RICHEY, FLORIDA 34655
PHONE: (800) 532-1047 FAX: (727) 848-3648 WWW.FLDESIGN.COM C.A. NO. 7421

©Copyright 2015 Florida Design Consultants, Inc. Drawings and concepts may not be used or reproduced without written permission.

K:\213\ProjData\ConstDocs\Plans\Promenade Parkway\213_PROMENADE-PCS.dwg - May 27, 2015 @ 12:06pm - asyrisko

GENERAL NOTES

1. ALL ELEVATIONS ARE BASED ON NAVD-1988 DATUM.
2. ALL OPEN/DISTURBED AREAS TO BE SODDED. AREAS WHERE SOD IS REQUIRED SHALL BE SAND GROWN AND STAKED AS NECESSARY TO PREVENT DISPLACEMENT. SODDED SLOPES GREATER THAN A 4:1 SLOPE SHALL BE PEGGED.
3. ELECTRICAL SERVICE WILL BE PROVIDED BY DUKE ENERGY.
4. COMMUNICATION CONNECTION SERVICE WILL BE PROVIDED BY VERIZON AND BRIGHT HOUSE.
5. STREET LIGHTING WILL BE PROVIDED BY DUKE ENERGY. STREET LIGHTING SHALL BE PROVIDED, DESIGNED, AND CONSTRUCTED IN ACCORDANCE WITH THIS CODE, SECTION 901.11, STREET LIGHTING.
6. PROPOSED DRAINAGE EASEMENTS AND UTILITY EASEMENTS SHALL BE GRANTED ON THE PLAT WHEN RECORDED. PONDS SHALL BE WITHIN DRAINAGE EASEMENTS. THE WETLANDS SHALL BE WITHIN WETLAND CONSERVATION AREAS.
7. THE SITE IS PRIMARILY LOCATED WITHIN FLOOD ZONE "X" WITH LIMITED AREAS IN FLOOD ZONE "A" & "AE". (REFERENCE: FLOOD INSURANCE RATE MAP PANEL NO. 12101C0380F, REVISED SEPTEMBER 24, 2014.
8. CONSERVATION AREAS, DETENTION PONDS AND BUFFER EASEMENTS SHALL BE OWNED AND MAINTAINED BY A HOME OWNERS ASSOCIATION, COMMUNITY DEVELOPMENT DISTRICT OR SOME OTHER APPROVED ENTITY OTHER THAN PASCO COUNTY.
9. THE CONTRACTOR SHALL NOT ENTER UPON OR IN ANY WAY ALTER ANY WETLAND AREAS, EXCEPT AS AUTHORIZED BY THE APPROPRIATE ENVIRONMENTAL PERMIT. ALL WORK IN THE VICINITY OF OPEN WATER OR WETLANDS SHALL BE PERFORMED IN COMPLIANCE WITH ANY AND ALL PERMITS.
10. ALL TREES WITHIN PROPOSED INGRESS/EGRESS EASEMENT, RIGHT OF WAYS AND DRAINAGE EASEMENTS MAY BE REMOVED.
11. THE CONTRACTOR SHALL EXERCISE EXTREME CAUTION IN THE VICINITY OF TREES TO REMAIN AND IS RESPONSIBLE FOR ANY DAMAGE RESULTING FROM HIS WORK.
12. BURN AREAS, IF PERMITTABLE, SHALL BE LIMITED TO PROPOSED PONDS AS DIRECTED BY THE OWNER OR HIS AUTHORIZED REPRESENTATIVE. CONTRACTOR SHALL BE RESPONSIBLE FOR ACQUIRING AND BEING IN COMPLIANCE WITH THE APPROPRIATE BURN PERMIT(S).
13. EXCESS FILL MATERIAL IF ANY WILL BE STOCKPILED IN FUTURE PHASES, OUTSIDE OF WETLANDS AND WETLAND BUFFERS, AND WITH APPROPRIATE EROSION CONTROL.
14. NO BUFFER SHALL ENCROACH INTO THE CLEAR SITE TRIANGLE, AS DEFINED IN SECTION 200 OF THE PASCO COUNTY LAND DEVELOPMENT CODE, SO AS TO BLOCK CLEAR SITE VISIBILITY. ALL CLEAR-SITE AREAS SHALL BE KEPT FREE OF ANY SIGNAGE, PLANTINGS, TREES, ETC. IN EXCESS OF THREE-AND-A-HALF (3 1/2) FEET IN HEIGHT.
15. THE LOCATION OF EXISTING UTILITIES ARE APPROXIMATE AS SHOWN AND IT IS THE CONTRACTOR'S RESPONSIBILITY TO DETERMINE THE EXACT LOCATION OF THE UTILITIES PRIOR TO CONSTRUCTION IN THEIR VICINITY. THE CONTRACTOR SHALL NOTIFY ALL CONCERNED PUBLIC AGENCIES AND UTILITY COMPANIES IN THE AREA BEFORE BEGINNING CONSTRUCTION, INCLUDING "SUNSHINE" AT 811.
16. PRIOR TO BEGINNING WORK, THE CONTRACTOR SHALL EXPOSE ALL EXISTING UTILITIES TO BE EXTENDED, CONNECTED TO, OR CROSSED FOR VERIFICATION OF THEIR LOCATION AND ELEVATION. ANY CONFLICTS SHALL BE BROUGHT TO THE ENGINEERS ATTENTION AND BE SATISFACTORILY RESOLVED BY THE CONTRACTOR.
17. IN ACCORDANCE WITH SECTION 905.2.6.B.3 OF THE PASCO COUNTY LAND DEVELOPMENT CODE, DRAINAGE AREAS THAT ABUT ROAD RIGHT-OF-WAYS SHALL BE PLANTED WITH TREES SELECTED FROM THE TAMPA BAY AREA TREE LIST AT A RATE OF(1) ONE TREE PER (50) FIFTY LINEAR FEET OF POND BANK. TREES MAY BE PLANTED IN GROUPS IN ACCORDANCE WITH THE APPROVED TREE PLAN.
18. IF DURING CONSTRUCTION ACTIVITIES, ANY EVIDENCE OF HISTORIC RESOURCES, INCLUDING, BUT NOT LIMITED TO, ABORIGINAL OR HISTORIC POTTERY, PREHISTORIC STONE TOOLS, BONE OR SHELL TOOLS, HISTORIC TRASH PITS, OR HISTORIC BUILDING FOUNDATIONS ARE DISCOVERED, WORK SHALL COME TO AN IMMEDIATE STOP AND THE FLORIDA DEPARTMENT OF HISTORIC RESOURCES (STATE HISTORIC PRESERVATION OFFICER) AND PASCO COUNTY SHALL BE NOTIFIED WITHIN TWO WORKING DAYS OF THE RESOURCES BEING FOUND ON THE SITE.
19. ALL ROADS WITHIN THIS SUBDIVISION WILL BE MAINTAINED BY A COMMUNITY DISTRICT (CDD). THE ROADWAY DESIGN SPEED OF THIS PROJECT IS AS NOTED ON THE TYPICAL SECTION.
20. IF, DURING CONSTRUCTION ACTIVITIES, ANY EVIDENCE OF STATE AND FEDERALLY PROTECTED PLANT AND/OR ANIMAL SPECIES, OTHER THAN THOSE SUBJECT TO ALREADY ISSUED PERMITS, ARE DISCOVERED, WORK SHALL COME TO AN IMMEDIATE STOP, AND PASCO COUNTY SHALL BE NOTIFIED WITHIN TWO WORKING DAYS OF THE PLANT AND/OR ANIMAL SPECIES BEING FOUND.
21. ALL PROPOSED SIGNS MUST BE APPLIED FOR, APPROVED, AND PERMITTED ON AN INDIVIDUAL BASIS APART FROM ANY ULTIMATELY-APPROVED SITE PLAN. APPROVAL OF THIS SITE PLAN DOES NOT CONSTITUTE APPROVAL OF ANY SIGNAGE.
22. THE ARCHITECT/ENGINEER CERTIFIES THAT THE SITE HAS BEEN DESIGNED IN ACCORDANCE WITH THE AMERICANS WITH DISABILITIES ACT.
23. NO IRRIGATION SYSTEM OR LANDSCAPING SHALL BE INSTALLED IN ANY COUNTY OR STATE RIGHT-OF-WAY WITHOUT ISSUANCE OF APPROPRIATE RIGHT-OF-WAY USE PERMIT.
24. THE OWNER/DEVELOPER ACKNOWLEDGES THAT THE SITE AND ITS SUBSEQUENT BUILDING PERMITS SHALL COMPLY WITH ALL REZONING/MPUD CONDITIONS.
25. ALL STRUCTURES, INCLUDING BUFFER WALLS, RETAINING WALLS, SIGNAGE, ETC. REQUIRE SEPARATE BUILDING PERMITS.
26. THE CONTRACTOR SHALL CHECK PLANS FOR CONFLICTS AND DISCREPANCIES PRIOR TO CONSTRUCTION. THE CONTRACTOR SHALL NOTIFY THE OWNER'S ENGINEER OF ANY CONFLICT BEFORE PERFORMING ANY WORK IN THE AFFECTED AREA.
27. THE CONTRACTOR IS RESPONSIBLE FOR REPAIRING ANY DAMAGE TO EXISTING FACILITIES, ABOVE OR BELOW GROUND, THAT MAY OCCUR AS A RESULT OF THE WORK PERFORMED BY THE CONTRACTOR CALLED FOR IN CONTRACT.
28. IT IS THE CONTRACTOR'S RESPONSIBILITY TO BECOME FAMILIAR WITH THE PERMIT AND INSPECTION REQUIREMENTS OF THE VARIOUS GOVERNMENTAL AGENCIES. THE CONTRACTOR SHALL OBTAIN ALL NECESSARY PERMITS PRIOR TO CONSTRUCTION, AND SCHEDULE INSPECTIONS ACCORDING TO AGENCY INSTRUCTION.
29. ALL WORK PERFORMED SHALL COMPLY WITH THE REGULATIONS AND ORDINANCES OF THE VARIOUS GOVERNMENTAL AGENCIES HAVING JURISDICTION OVER THE WORK.
30. CONTRACTOR SHALL SUBMIT FOR REVIEW TO THE OWNER'S ENGINEER SHOP DRAWINGS ON ALL PRECAST AND MANUFACTURED ITEMS. FAILURE TO OBTAIN ENGINEERS COMMENTS BEFORE INSTALLATION MAY RESULT IN REMOVAL AND REPLACEMENT AT CONTRACTOR'S EXPENSE.
31. REPAIR AND REPLACEMENT OF ALL PRIVATE AND PUBLIC PROPERTY AFFECTED BY THIS WORK SHALL BE RESTORED TO A CONDITION EQUAL TO OR BETTER THAN EXISTING CONDITIONS UNLESS SPECIFICALLY EXEMPTED BY THE PLANS.
32. CONTRACTOR SHALL VERIFY THE LENGTHS OF ALL PIPE PRIOR TO BIDDING AND INSTALLATION. NO EXTRAS WILL BE APPROVED FOR ADDITIONAL PIPE LUMP SUM CONTRACTS EXCEPT AS A RESULT FROM PLAN CHANGES.
33. ADJUSTMENTS OF INLETS, JUNCTION BOXES, MANHOLE TOPS, WATER VALVES, WATER METERS, ETC. SHALL BE INCLUDED IN THE CONTRACTOR'S BID AND NO CLAIM SHALL BE MADE AGAINST THE OWNER OR ENGINEER FOR THESE ADJUSTMENTS, IF REQUIRED.
34. IT WILL BE NECESSARY TO EXAMINE, COORDINATE AND ADJUST ACCORDINGLY THE PROPOSED LOCATIONS OF THE VARIOUS COMPONENTS OF THE SITE UTILITIES. IT SHALL BE THE RESPONSIBILITY OF THE CONTRACTOR TO SUBMIT COORDINATION DRAWINGS SHOWING PIPE SIZES, STRUCTURES, AND ELEVATIONS. THE CONTRACTOR SHALL BE RESPONSIBLE FOR THE SCHEDULING AND COORDINATION OF THE ALL UNDERGROUND WORK ASSOCIATED WITH THIS PROJECT.
35. UPON COMPLETION OF THE LAND DEVELOPMENT CONSTRUCTION, A PROFESSIONAL ENGINEER SHALL PROVIDE A CERTIFICATION TO PASCO COUNTY THAT THE PROJECT, INCLUDING EACH PAD AREA, COMPLIES WITH THE RECOMMENDATIONS OF THE GEOTECHNICAL/GEOLOGICAL ENGINEERING REPORT.

PASCO COUNTY DEVELOPMENT REVIEW - STANDARD SITE PLAN NOTES

1. ALL UTILITY CONSTRUCTION SHALL COMPLY WITH THE PASCO COUNTY STANDARDS FOR DESIGN AND CONSTRUCTION OF WATER AND WASTEWATER FACILITIES SPECIFICATIONS, LATEST EDITION.
2. ALL ON-SITE WATER AND SEWER FACILITIES SHALL BE OWNED AND MAINTAINED BY THE PASCO COUNTY.
3. INSTALLATION OF FUEL STORAGE TANKS REQUIRES REVIEW AND APPROVAL BY THE FIRE MARSHAL AND THE ISSUANCE OF A SEPARATE BUILDING PERMIT. APPROVAL OF THE SITE PLAN DOES NOT CONSTITUTE APPROVAL OF THE LOCATION OF THE FUEL TANKS.
4. HANDICAP PARKING SPACES WILL BE PROPERLY SIGNED AND STRIPED IN ACCORDANCE WITH FLORIDA STATUTE 316, THE MANUAL OF UNIFORM TRAFFIC CONTROL DEVICES, OR OTHER APPLICABLE STANDARDS.
5. ALL ON-SITE PARKING SPACES WILL BE STRIPED AND SIGNED IN ACCORDANCE WITH THE MANUAL ON UNIFORM TRAFFIC CONTROL DEVICES, LATEST EDITION. PARKING SPACES, DIRECTIONAL ARROWS, AND STOP BARS SHALL BE STRIPED IN WHITE. IT SHALL BE THE OWNER/DEVELOPER'S RESPONSIBILITY TO PROPERLY SIGN AND STRIPE IN ACCORDANCE WITH APPLICABLE STANDARDS.
6. THE OWNER/DEVELOPER ACKNOWLEDGES THAT THIS APPROVAL DOES NOT INCLUDE ANY WORK IN THE COUNTY RIGHT-OF-WAY. ALL RIGHT-OF-WAY WORK SHALL BE A FUNCTION OF AN APPROVED PASCO RIGHT-OF-WAY USE PERMIT.

SAFETY

1. DURING THE CONSTRUCTION AND MAINTENANCE OF THIS PROJECT, ALL SAFETY REGULATIONS ARE TO BE ENFORCED. THE CONTRACTOR OR HIS HIS REPRESENTATIVE SHALL BE RESPONSIBLE FOR THE CONTROL AND SAFETY OF THE TRAVELING PUBLIC AND THE SAFETY OF HIS PERSONNEL.
2. THE CONTRACTOR SHALL BE RESPONSIBLE FOR PROTECTING EXCAVATIONS AGAINST COLLAPSE AND WILL PROVIDE BRACING, SHEETING OR SHORING AS NECESSARY. DEWATERING TRENCHES SHALL BE KEPT DRY WHILE PIPE AND APPURTENANCES ARE BEING PLACED.
3. LABOR SAFETY REGULATIONS SHALL CONFORM TO THE PROVISIONS SET FORTH BY OSHA IN THE FEDERAL REGISTER OF THE DEPARTMENT OF TRANSPORTATION.
4. CONTRACTOR SHALL PROVIDE AND MAINTAIN ITS OWN SAFETY EQUIPMENT IN ACCORDANCE WITH ITS HEALTH & SAFETY PROGRAM AND ALL OTHER APPLICABLE LEGAL AND HEALTH AND SAFETY REQUIREMENTS. THE CONTRACTOR IS ALSO RESPONSIBLE FOR PROVIDING ITS EMPLOYEES AND SUB CONTRACTORS WITH ADEQUATE INFORMATION AND TRAINING TO ENSURE THAT ALL EMPLOYEES AND SUB CONTRACTORS AND SUB CONTRACTOR'S EMPLOYEES COMPLY WITH ALL APPLICABLE REQUIREMENTS. CONTRACTOR SHALL REMAIN IN COMPLIANCE WITH ALL OCCUPATION SAFETY AND HEALTH REGULATIONS AS WELL AS THE ENVIRONMENTAL PROTECTION LAWS. THE FOLLOWING IS NOT TO BE PERCEIVED AS THE ENTIRE SAFETY PROGRAM BUT JUST BASIC REQUIREMENTS.
5. ALL EXCAVATIONS BY THE CONTRACTOR SHALL CONFORM TO THE REQUIREMENTS OF THE DEPARTMENT OF LABOR'S OCCUPATIONAL SAFETY AND HEALTH ADMINISTRATION RULES AND REGULATIONS. PARTICULAR ATTENTION MUST BE PAID TO THE CONSTRUCTION STANDARDS FOR EXCAVATIONS, 29 CFR PART 1926, SUBPART P.
6. THE MINIMUM STANDARDS AS SET FORTH IN THE CURRENT EDITION OF "THE STATE OF FLORIDA, MANUAL ON TRAFFIC CONTROL AND SAFE PRACTICES FOR STREET AND HIGHWAY CONSTRUCTION, MAINTENANCE AND UTILITY OPERATIONS" SHALL BE FOLLOWED IN THE DESIGN APPLICATION, INSTALLATION, MAINTENANCE AND REMOVAL OF ALL TRAFFIC CONTROL DEVICES, WARNING DEVICES AND BARRIERS NECESSARY TO PROTECT THE PUBLIC AND WORKMEN FROM HAZARDS WITHIN THE PROJECT LIMITS.
7. ALL TRAFFIC CONTROL MARKINGS AND DEVICES SHALL CONFORM TO THE PROVISIONS SET FORTH IN THE MANUAL ON UNIFORM TRAFFIC CONTROL DEVICES PREPARED BY THE U.S. DEPARTMENT OF TRANSPORTATION FEDERAL HIGHWAY ADMINISTRATION.
8. IT SHALL BE THE SOLE RESPONSIBILITY OF THE CONTRACTOR TO COMPLY AND ENFORCE ALL APPLICABLE SAFETY REGULATIONS. THE ABOVE INFORMATION HAS BEEN PROVIDED FOR THE CONTRACTOR'S INFORMATION ONLY AND DOES NOT IMPLY THAT THE OWNER OR ENGINEER WILL INSPECT AND/OR ENFORCE SAFETY REGULATIONS.
9. THE CONTRACTOR SHALL EXERCISE EXTREME CAUTION IN AREAS OF BURIED UTILITIES AND SHALL PROVIDE AT LEAST 48 HOURS NOTICE TO THE UTILITY COMPANIES PRIOR TO CONSTRUCTION TO OBTAIN FIELD LOCATIONS OF EXISTING UNDERGROUND UTILITIES. CALL SUNSHINE ONE AT 811.
10. THE CONTRACTOR'S MAINTENANCE OF TRAFFIC PLAN MUST BE SUBMITTED TO AND APPROVED BY, THE APPROPRIATE GOVERNMENTAL AGENCIES PRIOR TO BEGINNING ANY CONSTRUCTION.

EROSION/TURBIDITY CONTROL

1. ALL COSTS ASSOCIATED WITH ADDITIONAL TURBIDITY EROSION CONTROL ARE INCIDENTAL TO THE DEWATERING COSTS OR THE ITEM THAT REQUIRES THE DEWATERING.
2. THE CONTRACTOR SHALL BE RESPONSIBLE FOR REQUIREMENTS CONTAINED IN NPDES EROSION AND SEDIMENTATION CONTROLS INCLUDING ALL REPORTING AND MAINTENANCE REQUIREMENTS UNTIL SUCH TIME AS THE PROJECT INFRASTRUCTURE IS ACCEPTED BY THE COUNTY.
3. THE INSTALLATION OF TEMPORARY EROSION CONTROL BARRIERS SHALL BE COORDINATED WITH THE CONSTRUCTION OF THE PERMANENT EROSION CONTROL FEATURES TO THE EXTENT NECESSARY TO ASSURE ECONOMICAL, EFFECTIVE AND CONTINUOUS CONTROL OF EROSION AND WATER POLLUTION THROUGHOUT THE LIFE OF THE CONSTRUCTION PHASE.
4. THE TYPE OF EROSION CONTROL BARRIERS USED SHALL BE GOVERNED BY THE NATURE OF THE CONSTRUCTION OPERATION AND SOIL TYPE THAT WILL BE EXPOSED. SILTY AND CLAYEY MATERIAL USUALLY REQUIRE SOLID SEDIMENT BARRIERS TO PREVENT TURBID WATER DISCHARGE, WHILE SANDY MATERIAL MAY NEED ONLY SILT SCREENS OR HAY BALES TO PREVENT EROSION. FLOATING TURBIDITY CURTAINS SHALL BE USED IN OPEN WATER SITUATIONS. DIVERSION DITCHES OR SWALES MAY BE REQUIRED TO PREVENT TURBID STORMWATER RUNOFF FROM BEING DISCHARGED TO WETLANDS OR OTHER WATER BODIES. IT MAY BE NECESSARY TO EMPLOY A COMBINATION OF BARRIERS, DITCHES AND OTHER EROSION/TURBIDITY CONTROL MEASURES IF CONDITIONS WARRANT.
5. CONSTRUCTION OPERATIONS IN OR ADJACENT TO WETLANDS SHALL BE RESTRICTED TO THOSE AREAS IDENTIFIED IN THE PLANS AND IN THE SPECIFICATIONS.
6. EXCEPT AS NECESSARY FOR CONSTRUCTION, EXCAVATED MATERIAL SHALL NOT BE DEPOSITED IN THE WETLANDS OR IN A POSITION CLOSE ENOUGH THERETO TO BE WASHED AWAY BY HIGH WATER OR RUNOFF.
7. WHERE PUMPS ARE TO BE USED TO REMOVE TURBID WATERS FROM CONSTRUCTION AREAS, THE WATER SHALL BE TREATED PRIOR TO DISCHARGE TO THE WETLANDS. TREATMENT METHODS INCLUDE AND ARE NOT LIMITED TO, TURBID WATER BEING PUMPED INTO GRASSED SWALES OR APPROPRIATE VEGETATED AREAS, SEDIMENT BASINS, OR CONFINED BY AN APPROPRIATE ENCLOSURE SUCH AS TURBIDITY BARRIERS, AND KEPT CONFINED UNTIL ITS TURBIDITY LEVEL MEETS STATE WATER QUALITY STANDARDS.
8. THE CONTRACTOR SHALL SCHEDULE HIS OPERATIONS SUCH THAT THE AREA OF UNPROTECTED ERODIBLE EARTH EXPOSED AT ANY ONE TIME IS NOT LARGER THAN THE MINIMUM AREA NECESSARY FOR EFFICIENT CONSTRUCTION OPERATIONS, AND THE DURATION OF EXPOSED, UNCOMPLETED CONSTRUCTION TO THE ELEMENTS SHALL BE AS SHORT AS PRACTICABLE. CLEARING AND GRUBBING SHALL BE SO SCHEDULED AND PERFORMED THAT GRADING OPERATIONS CAN FOLLOW IMMEDIATELY THEREAFTER, AND GRADING OPERATIONS SHALL BE SCHEDULED AND PERFORMED THAT PERMANENT EROSION CONTROL FEATURES CAN FOLLOW IMMEDIATELY THEREAFTER IF CONDITIONS ON THE PROJECT PERMIT.
9. THE CONTRACTOR AND/OR OWNER'S REPRESENTATIVE SHALL PROVIDE ROUTINE MAINTENANCE OF PERMANENT AND TEMPORARY EROSION CONTROL FEATURES UNTIL THE PROJECT IS COMPLETE AND ALL BARED SOILS ARE STABILIZED.
10. THE CONTRACTOR SHALL CONTROL ALL FUGITIVE DUST ORIGINATING ON THIS PROJECT BY WATERING OR OTHER METHODS AS APPROVED BY THE OWNER OR HIS AUTHORIZED REPRESENTATIVE.
11. ALL PRACTICABLE AND NECESSARY EFFORT, INCLUDING BUT NOT LIMITED TO THE USE OF STAKED HAY BALES OR STAKED SILT SCREEN BARRIERS, SHALL BE TAKEN DURING CONSTRUCTION TO CONTROL AND PREVENT EROSION AND TRANSPORT OF SEDIMENT MATERIALS TO INLETS, SURFACE DRAINS, WETLANDS AND POND AREAS. STAKED HAY BALES AND STAKED SILT SCREEN BARRIERS SHALL BE INSTALLED PRIOR TO AND MAINTAINED THROUGH CONSTRUCTION COMPLETENESS. THE CONTRACTOR SHALL BE RESPONSIBLE FOR ALL RESTORATION EFFORTS THAT MAY BE REQUIRED.
12. THE CONTRACTOR SHALL RETAIN ALL EFFLUENT FROM DEWATERING ACTIVITIES ON-SITE WITHIN ISOLATED PONDS OR WETLANDS. NO WATER FROM DEWATERING ACTIVITIES SHALL BE PERMITTED TO LEAVE THE SITE WITHOUT PRIOR WRITTEN APPROVAL FROM SWFWMD. ALL WATER FROM DEWATERING ACTIVITIES SHALL PASS THROUGH DEWATERING BAGS (EQUIVALENT TO ULTRA DEWATERING BAGS AS PRODUCED BY ULTRA TECH INTERNATIONAL, INC.) OR APPROVED ALTERNATE.

CLEARING AND SITE PREPARATION NOTES

1. PRIOR TO THE START OF THE CLEARING AND GRUBBING, OR ANY SOIL DISTURBANCE CONTACT PASCO COUNTY STORMWATER MANAGEMENT AT (727) 834-3611 FOR SOIL EROSION AND SEDIMENT CONTROL, PRE-INSPECTION MEETING.
2. PRIOR TO ANY SITE CLEARING, ALL TREES SHOWN TO REMAIN ON THE CONSTRUCTION PLANS SHALL BE PROTECTED IN ACCORDANCE WITH THE LOCAL REGULATORY AGENCY'S TREE ORDINANCE AND DETAILS CONTAINED IN THESE PLANS. IT SHALL BE THE CONTRACTOR'S RESPONSIBILITY TO MAINTAIN THESE TREES IN GOOD CONDITION
3. CONTRACTOR SHALL CLEAR AND GRUB ONLY THOSE PORTIONS OF THE SITE NECESSARY FOR CONSTRUCTION. DISTURBED AREAS WILL BE SEEDED, MULCHED, OR PLANTED WITH OTHER APPROVED LANDSCAPE MATERIAL IMMEDIATELY FOLLOWING CONSTRUCTION.
4. ALL CONSTRUCTION DEBRIS AND OTHER WASTE MATERIAL SHALL BE DISPOSED OF OFF-SITE IN ACCORDANCE WITH APPLICABLE REGULATIONS.
5. THE LOCATION OF ALL EXISTING UTILITIES SHOWN ON THE PLANS HAVE BEEN DETERMINED FROM THE BEST INFORMATION AVAILABLE AND ARE GIVEN FOR THE CONVENIENCE OF THE CONTRACTOR/SUBCONTRACTOR. THE ENGINEER ASSUMES NO RESPONSIBILITY FOR ACCURACY PRIOR TO THE START OF ANY CONSTRUCTION ACTIVITY. IT SHALL BE THE CONTRACTOR'S/SUBCONTRACTOR'S RESPONSIBILITY TO NOTIFY THE VARIOUS UTILITIES AND TO MAKE THE NECESSARY ARRANGEMENTS FOR ANY RELOCATION OF THESE UTILITIES WITH THE OWNER OF THE UTILITY. THE CONTRACTOR/SUBCONTRACTOR SHALL EXERCISE CAUTION WHEN CROSSING ANY UNDERGROUND UTILITY, WHETHER SHOWN ON THE PLANS OR LOCATED BY THE UTILITY COMPANY. ALL UTILITIES WHICH INTERFERE WITH THE PROPOSED CONSTRUCTION SHALL BE RELOCATED BY THE RESPECTIVE UTILITY COMPANIES AND THE CONTRACTOR/SUBCONTRACTOR SHALL COOPERATE WITH THE UTILITY COMPANIES DURING RELOCATION OPERATIONS. ANY DELAY OR INCONVENIENCE CAUSED TO THE CONTRACTOR/SUBCONTRACTOR BY THE VARIOUS UTILITIES SHALL BE INCIDENTAL TO THE CONTRACT AND NO EXTRA COMPENSATION WILL BE ALLOWED.
6. ALL TREE ROOTS EXISTING WITHIN APPROVED AREAS AND ORIGINATING FROM A PROTECTED TREE, SHALL BE SEVERED CLEAN AT THE LIMITS OF THE PRESERVED AREA AS SHOWN ON THE TREE REMOVAL PLAN.
7. ALL TRIMMING UNDERTAKEN ON A TREE PROTECTED BY THE PROVISIONS OF THE LAND DEVELOPMENT CODE SHALL BE PRUNED IN ACCORDANCE WITH THE NATIONAL ARBORIST ASSOCIATION (NAA) PRUNING STANDARDS.
8. NO GRADE CHANGES SHOULD OCCUR WITHIN THE DRIP LINE OF TREES TO REMAIN.
9. ALL TREES TO REMAIN MUST BE PROTECTED BY TREE PROTECTION BARRICADES MEETING THE MINIMUM CODE STANDARDS. PROTECTIVE BARRICADES SHALL REMAIN IN PLACE UNTIL LAND ALTERATION AND CONSTRUCTION ACTIVITIES ARE COMPLETED.
10. DURING LAND ALTERATION AND CONSTRUCTION ACTIVITIES, THE CONTRACTOR SHALL NOT REMOVE VEGETATION BY GRUBBING OR TO PLACE SOIL DEPOSITS, DEBRIS, SOLVENTS, CONSTRUCTION MATERIAL, MACHINERY OR OTHER EQUIPMENT OF ANY KIND WITHIN THE DRIP LINE OF A TREE TO REMAIN ON THE SITE UNLESS OTHERWISE APPROVED BY THE COUNTY.
11. CONTRACTOR IS TO PROVIDE EROSION CONTROL/SEDIMENTATION BARRIER (HAY BALES OR SILTATION CURTAIN) TO PREVENT SILTATION OF ADJACENT PROPERTY, STREETS, STORM SEWERS, WATERWAYS, AND EXISTING WETLANDS. IN ADDITION, CONTRACTOR SHALL PLACE STRAW MULCH, OR OTHER SUITABLE MATERIAL ON GROUND IN AREAS WHERE CONSTRUCTION RELATED TRAFFIC IS TO ENTER AND EXIT THE SITE. IF, IN THE OPINION OF THE ENGINEER AND / OR LOCAL AUTHORITIES, EXCESSIVE QUANTITIES OF EARTH ARE TRANSPORTED OFF-SITE EITHER BY NATURAL DRAINAGE OR BY VEHICULAR TRAFFIC, THE CONTRACTOR IS TO REMOVE SAID EARTH TO THE SATISFACTION OF THE ENGINEER AND/OR AUTHORITIES.

SANITARY SEWER, RECLAIMED AND POTABLE WATER DISTRIBUTION NOTES

1. ALL SEWER AND WATER PIPE MATERIAL AND INSTALLATIONS SHALL BE IN ACCORDANCE WITH THE PASCO COUNTY "STANDARDS FOR DESIGN AND CONSTRUCTION OF WATER, WASTEWATER, AND RECLAIMED WATER FACILITIES", LATEST EDITION. SANITARY SEWER PIPE SHALL BE PVC (SDR-35) UP TO DEPTHS OF 12 FEET, DEPTHS BETWEEN 12 FEET AND 18 FEET SHALL BE PVC (SDR-26) AND DEPTHS EXCEEDING 18 FEET SHALL BE PVC (C-900). ALL SANITARY SEWER SHALL BE COLORED GREEN. WATER PIPE 2" THROUGH 3" SHALL BE PVC (SDR-21) AND 4" THROUGH 12" SHALL BE PVC AWWA C-900, DR-18. ALL WATER PIPE SHALL BE COLORED BLUE.
2. ALL SANITARY SEWER AND POTABLE WATER SERVICE LATERALS SHALL BE MARKED WITH PAINT ON THE EDGE OF PAVEMENT AND WITH WOOD STAKES AT THE END OF SERVICE LATERALS (BLUE PAINT FOR WATER AND GREEN PAINT FOR SEWER) OR SOME OTHER APPROVED METHOD.
3. CONFLICTS OF WATER LINES WITH SANITARY SEWER AND STORM SEWER SYSTEMS SHALL BE RESOLVED BY ADJUSTING WATER LINES AS NECESSARY.
4. POTABLE WATER LINE AND SANITARY SEWER LINES SHALL HAVE A MINIMUM OF 36-INCHES OF COVER FROM PROPOSED GRADE. (UNLESS APPROVED IN WRITING BY THE PROJECT ENGINEER).
5. APPROXIMATE POTABLE WATER LINE DISTANCES ARE SHOWN BETWEEN CENTERS OF MAIN FITTINGS. THE CONTRACTOR SHALL PROVIDE ALL FITTINGS REQUIRED FOR COMPLETE SYSTEMS IN ACCORDANCE WITH GOOD CONSTRUCTION PRACTICES.
6. ALL WATER MAINS SHALL MAINTAIN A MINIMUM HORIZONTAL SEPARATION OF 10 FEET FROM ALL SANITARY SEWER, STORM SEWER AND FORCEMAINS. THE DISTANCE SHALL BE MEASURED EDGE TO EDGE. A MINIMUM VERTICAL SEPARATION OF 18 INCHES SHALL BE MAINTAINED BETWEEN THE INVERT OF THE UPPER PIPE AND THE CROWN OF THE LOWER PIPE.
7. ALL WATER LINE PIPE JOINTS SHALL BE A MINIMUM OF 10 FEET FROM THE CENTERLINE OF ANY STORM SEWER STRUCTURE (MANHOLES, INLETS OR CATCH BASINS).
8. SEWAGE DISPOSAL SHALL BE PROVIDED BY PASCO COUNTY UTILITIES VIA AN EXISTING SANITARY SEWER SYSTEM.
9. POTABLE WATER SHALL BE PROVIDED BY PASCO COUNTY FROM AN EXISTING WATER MAIN SYSTEM.
10. FIRE PROTECTION WILL BE PROVIDED FROM HYDRANTS BY THE EXISTING PASCO COUNTY FIRE STATION NO 26.
11. AT THE TERMINATION OF EACH WATER MAIN, A GATE VALVE THE SAME SIZE AS THE WATER MAIN AND 2" TEMPORARY BLOW-OFF SHALL BE INSTALLED. VALVES AND BLOW-OFFS SHALL BE RESTRAINED AND CONSTRUCTED IN ACCORDANCE WITH THE CURRENT PASCO COUNTY STANDARDS.
12. TYPICAL-ALL WATER LINES AND FORCEMAINS DEFLECTING AROUND INLETS, TREES OR OTHER OBSTRUCTIONS SHALL USE THE PIPE DEFLECTION METHOD AS REQUIRED BY P.C.U.D.
13. CONTRACTOR SHALL PREVENT FLOATATION OF STRUCTURES DURING ALL PHASES OF CONSTRUCTION.
14. RAISED PAVEMENT MARKINGS INDICATING THE FIRE HYDRANT LOCATIONS SHALL BE PROVIDED IN ACCORDANCE WITH PASCO COUNTY CODE.
15. HYDRANTS SHALL BE FLOW TESTED BY THE CONTRACTOR. THIS COULD BE PART OF A UTILITY INSPECTION OR A SEPARATE TEST, BUT NOT PART OF THE PRESSURE TEST. THE ENGINEER OF RECORD OR THEIR APPOINTED REPRESENTATIVE MUST BE PRESENT AT THIS FLOW TEST.

83A. FIRE HYDRANTS SHALL BE INSTALLED AND IN SERVICE PRIOR TO THE ACCUMULATION OF COMBUSTIBLES.

16. FIRE HYDRANTS MUST BE FLOW TESTED AND COLOR-CODED. BASED ON FLOW RESULTS, THE CAPS (TOP AND 3 SIDES) ARE TO BE COLOR CODED: 0-500 GPM RED CLASS A, 500-1000 GPM ORANGE CLASS B, 1000-1500 GPM GREEN CLASS A, AND 1500+ GPM BLUE CLASS AA. ALL HYDRANT BODIES ARE TO BE BASE COLORED YELLOW.
17. THE SANITARY SEWER PLUGS SHALL BE INSTALLED AT THE BEGINNING OF CONSTRUCTION AND SHALL REMAIN IN PLACE UNTIL CERTIFICATION HAS BEEN COMPLETED FOR FACILITIES TO BE PLACED INTO SERVICE.
18. ALL WATER METERS ARE TO BE LOCATED OUTSIDE OF DRIVEWAYS.
19. ALL COMPONENTS OF WATER SYSTEM, INCLUDING FITTINGS, THRUST BLOCKING, HYDRANTS, CONNECTIONS AND VALVES SHALL REMAIN UNCOVERED UNTIL PROPERLY PRESSURE TESTED AND ACCEPTED BY THE OWNER;S ENGINEER, PRESSURE TESTS TO BE IN ACCORDANCE WITH THE LATEST EDITION OF THE REQUIREMENTS OF THE APPROPRIATE MUNICIPALITY. CONTRACTOR TO NOTIFY OWNER'S ENGINEER AND COUNTY INSPECTORS 48 HOURS IN ADVANCE OF PERFORMING TESTS.
20. CONTRACTOR TO PERFORM CHLORINATING AND BACTERIOLOGICAL SAMPLING AND OBTAIN CLEARANCE OF DOMESTIC WATER SYSTEM. COPIES OF ALL BACTERIOLOGICAL TESTS TO BE SUBMITTED TO OWNER'S ENGINEER.
21. SANITARY SEWERS, FORCE MAINS AND STORM SEWERS CROSSING WATER MAIN SHALL BE INSTALLED TO PROVIDE A MINIMUM VERTICAL DISTANCE OF 18 INCHES BETWEEN THE INVERT OF THE UPPER PIPE AND THE CROWN OF THE LOWER PIPE WHENEVER POSSIBLE.
22. WHERE SANITARY SEWERS, FORCE MAINS, RECLAIMED WATER MAINS AND STORM SEWERS MUST CROSS A POTABLE WATER MAIN WITH LESS THAN 18 INCHES VERTICAL DISTANCE: (1) BOTH THE SEWER AND THE WATER MAIN SHALL BE CONSTRUCTED OF DUCTILE IRON PIPE (DIP) AT THE CROSSING. (DIP IS NOT REQUIRED FOR STORM SEWERS IF IT IS NOT AVAILABLE IN THE SIZE PROPOSED/ALSO, A SANITARY SEWER OR FORCE MAIN MAY BE C900 PVC AT THE (CROSSING) SUFFICIENT LENGTHS OF DIP MUST BE USED TO PROVIDE A MINIMUM SEPARATION OF 10 FEET BETWEEN ANY TWO JOINTS (2) ALTERNATIVELY, ONE OF THE CROSSING MAINS SHALL BE ENCLOSED WITHIN A 20 FOOT LONG STEEL OR PVC CASING CENTERED ON THE CROSSING. WHERE WATER MAIN CROSSES BELOW SEWER MAIN, ENCASEMENT OF BOTH MAINS IS MANDATORY.
23. ALL JOINTS ON THE WATER MAIN WITHIN 20 FEET OF THE CROSSING MUST BE LEAK FREE AND MECHANICALLY RESTRAINED. A MINIMUM VERTICAL CLEARANCE OF 6 INCHES MUST BE MAINTAINED AT THE CROSSING.
24. ALL CROSSINGS SHALL BE ARRANGED SO THAT THE SEWER PIPE JOINTS AND THE WATER MAIN JOINTS ARE EQUIDISTANT FROM THE POINT OF CROSSING (PIPES CENTERED ON THE CROSSING).
25. WHERE A NEW PIPE CONFLICTS WITH AN EXISTING PIPE, THE NEW PIPE SHALL BE CONSTRUCTED OF DIP AND THE CROSSING SHALL BE ARRANGED TO MEET THE REQUIREMENTS ABOVE.
26. A MINIMUM OF 10-FOOT HORIZONTAL SEPARATION SHALL BE MAINTAINED BETWEEN ANY TYPE OF SEWER AND WATER MAIN IN PARALLEL INSTALLATIONS WHENEVER POSSIBLE.
27. IN CASES WHERE IT IS NOT POSSIBLE TO MAINTAIN A 10-FOOT HORIZONTAL SEPARATION, THE WATER MAIN MUST BE LAID IN A SEPARATE TRENCH OR ON AN UNDISTURBED EARTH SHELF LOCATED ON ONE SIDE OF THE SEWER OR FORCE MAIN AT SUCH AN ELEVATION THAT THE BOTTOM OF THE WATER MAIN IS AT LEAST 18 INCHES ABOVE THE TOP OF THE SEWER.
28. WHERE IT IS NOT POSSIBLE TO MAINTAIN A VERTICAL DISTANCE OF 18 INCHES IN PARALLEL INSTALLATIONS, THE WATER MAIN SHALL BE CONSTRUCTED OF DIP AND THE SEWER OR THE FORCE MAIN SHALL BE CONSTRUCTED OF DIP (IF AVAILABLE IN SIZE PROPOSED) WITH A MINIMUM VERTICAL DISTANCE OF 6 INCHES. THE WATER MAIN SHOULD ALWAYS BE ABOVE THE SEWER. JOINTS ON THE WATER MAIN SHALL BE LOCATED AS FAR APART AS POSSIBLE FROM THE JOINTS ON THE SEWER OR FORCE MAIN (STAGGERED JOINTS).
29. ALL ON-SITE PVC WATER MAINS 4-12 INCHES SHALL BE IN ACCORDANCE WITH AWWA C-900 STANDARDS. ALL ON-SITE PVC WATER MAINS 2-3 INCHES SHALL BE CLASS 1120 OR 1220 (SDR 21) AND MEET REQUIREMENTS OF ASTM D-2241. WATER MAINS SMALLER THAN 2 INCHES SHALL BE CLASS 1120 OR 1220 SCHEDULE 80 AND MEET REQUIREMENTS OF ASTM D-1785.
30. PE PIPE 2 INCHES OR SMALLER SHALL MEET THE REQUIREMENTS OF ASTM D-1248.
31. ALL DUCTILE IRON PIPE SHALL CONFORM TO THE REQUIREMENTS OF ANSI STANDARDS A21.51, MINIMUM CLASS 50. IN AREAS WHERE THE SOIL IS DETERMINED TO BE CORROSIVE OR HIGH GROUND WATER IS EXPECTED, THE PIPE SHALL BE INSTALLED IN LOOSE POLYETHYLENE ENCASEMENT NOT LESS THAN 8 MILS THICK AND INSTALLED IN ACCORDANCE WITH ANSI SPECIFICATION A21.51.
32. ALL WATER SYSTEM WORK SHALL CONFORM WITH LOCAL REGULATORY STANDARDS AND SPECIFICATIONS.
33. ALL NON-METALIC PIPE WILL BE INSTALLED WITH 2 PAIR, 10 GAUGE, COPPER TRACER WIRE.
34. ALL UNDERGROUND UTILITIES MUST BE IN PLACE AND TESTED OR INSPECTED PRIOR TO BASE AND PAVEMENT CONSTRUCTION.
35. ALL SANITARY SEWER WORK SHALL CONFORM WITH LOCAL REGULATORY STANDARDS AND SPECIFICATIONS.
36. ALL SANITARY SEWER MANHOLE COVERS SHALL BE TRAFFIC RATED FOR H-20 LOADING.
37. SANITARY SEWER MAINS AND LATERALS SHALL HAVE A MINIMUM COVER OF THREE (3) FEET.
38. JOINTING OF PVC PIPE USING SOLVENT CEMENTING IS NOT PERMITTED.
39. NON-METALIC FORCEMAIN PIPE WILL BE INSTALLED WITH TWO PAIR, 10 GAUGE COPPER TRACER WIRE.
40. THE CONTRACTOR SHALL PERFORM AT HIS OWN EXPENSE AN INFILTRATION OR EXFILTRATION TEST, A TELEVISION INSPECTION WITH VIDEO-TAPE RECORDS, AND A MANDREL (GO, NO GO) TEST ON ALL GRAVITY SEWERS IN ACCORDANCE WITH THE REQUIREMENTS OF THE REGULATORY AGENCY HAVING JURISDICTION. SAID TEST ARE TO BE CERTIFIED BY THE ENGINEER OF RECORD AND SUBMITTED TO THE REGULATORY AGENCY FOR APPROVAL. COORDINATION OF TESTING AND NOTIFICATION OF ALL PARITIES IS THE CONTRACTOR'S RESPONSIBILITY. THE MUNICIPALITY WILL PERFORM THE T.V. INSPECTION OF THE GRAVITY SEWER. A TESTING AGENCY APPROVED BY THE ENGINEER SHALL PERFORM THE MANDREL TESTING.
41. ALL COMPONENTS OF THE POTABLE AND RECLAIMED WATER SYSTEM (IF ANY), INCLUDING FITTINGS, HYDRANTS, CONNECTIONS AND VALVES SHALL REMAIN UNCOVERED UNTIL REVIEWED BY OWNER'S ENGINEER AND PROPERLY INSPECTED AND ACCEPTED BY THE MUNICIPALITY. PRESSURE TESTS TO BE IN ACCORDANCE WITH THE REQUIREMENTS OF THE MUNICIPALITIES. UTILITY DEPARTMENT SPECIFICATIONS. CONTRACTOR TO NOTIFY OWNER'S ENGINEER AND MUNICIPALITIES INSPECTOR FROM MUNICIPALITY 72 HOURS IN ADVANCE OF PERFORMING TEST.
42. CONTRACTOR TO CLEAN AND FLUSH WATER SERVICE CONNECTION PRIOR TO PLACING INTO SERVICE.
43. ALL OF THE ABOVE NOTES APPLY TO ALL SANITARY SEWER AND WATER DISTRIBUTION PLAN SHEETS.

PAVING, GRADING, AND DRAINAGE NOTES

1. ALL UNDERGROUND UTILITIES INCLUDING CONDUIT FOR ELECTRICAL, CABLE, IRRIGATION AND TELEPHONE CROSSINGS SHALL BE INSTALLED PRIOR TO PAVEMENT CONSTRUCTION.
2. ALL MATERIALS AND CONSTRUCTION SHALL BE IN ACCORDANCE WITH PASCO COUNTY STANDARDS AND/OR FDOT STANDARDS AS REQUIRED.
3. ALL ROADWAY CONSTRUCTION SHALL BE PERFORMED IN ACCORDANCE WITH APPLICABLE SECTIONS OF THE CURRENT VERSION OF THE "MANUAL OF UNIFORM MINIMUM STANDARDS FOR DESIGN, CONSTRUCTION AND MAINTENANCE FOR STREETS AND HIGHWAYS", STATE OF FLORIDA DEPARTMENT OF TRANSPORTATION.
4. PIPE MEASUREMENTS ARE TO CENTER OF STRUCTURES FOR INLETS AND STORM MANHOLES. MITERED END SECTIONS AND FLARED END SECTIONS ARE PART OF PIPE LENGTHS. CURB INLET STATIONS AND OFFSETS ARE CALCULATED TO EDGE OF PAVEMENT, CENTER OF BOX. ALL PIPE LENGTHS ARE APPROXIMATE.
5. DRAINAGE RUNOFF (POST DEVELOPMENT) SHALL BE COLLECTED AND DIRECTED TO PONDS VIA PIPES AND SWALES AS INDICATED ON THE MASTER DRAINAGE PLAN.
6. STAKED SILT FENCE SHALL BE INSTALLED AT LOCATIONS SHOWN ON THE PLANS PRIOR TO ANY CONSTRUCTION ACTIVITIES IN THE VICINITY OF ADJACENT WETLAND AREAS AND SHALL BE MAINTAINED THROUGH THE PROJECT COMPLETION.
7. FOR CONTROL STRUCTURE DATA, SEE POND & DRAINAGE STRUCTURE DETAIL SHEETS AND PAVING, GRADING AND DRAINAGE PLANS.
8. AFTER CONSTRUCTION OF EACH POND CONTROL STRUCTURE IS COMPLETED, A PERMANENT BENCHMARK SHALL BE ESTABLISHED ADJACENT TO OR ON THE OUTFALL STRUCTURE.
9. THE PROPOSED STORMWATER PONDS SHALL NOT BE OPERATED AND MAINTAINED BY THE PASCO COUNTY. IT SHALL BE THE RESPONSIBILITY OF ASTURIA COMMUNITY DEVELOPMENT DISTRICT TO MAINTAIN THE STORMWATER PONDS.
10. CONTRACTOR SHALL PREVENT FLOATATION OF STRUCTURES DURING ALL PHASES OF CONSTRUCTION.
11. A GEOTECHNICAL TESTING COMPANY SHALL BE PRESENT DURING POND EXCAVATION TO OBSERVE POND EXCAVATION ACTIVITIES. IF LIMEROCK IS ENCOUNTERED DURING EXCAVATION, EXCAVATION IN THIS AREA WILL STOP AND A MINIMUM OF 2 FEET OF CLAY SHALL BE BACKFILLED AND COMPACTED TO THE GEOTECH'S SATISFACTION.
12. ALL OF THE ABOVE NOTES APPLY TO ALL PAVING, GRADING AND DRAINAGE PLAN SHEETS.
13. CONTRACTOR TO PROVIDE A ½" BITUMINOUS EXPANSION JOINT MATERIAL WITH SEALER AT ABUTMENT OF CONCRETE AND ANY STRUCTURE.
14. ALL PAVEMENT MARKINGS SHALL CONFORM TO FDOT STANDARD INDEX NO. 17346, SHEETS 1-7.
15. CONTRACTOR SHALL TRIM, TACK AND MATCH EXISTING PAVEMENT AT LOCATIONS WHERE NEW PAVEMENT MEETS EXISTING PAVEMENT.
16. PAD ELEVATION IS FINISHED FLOOR ELEVATION MINUS 6".
17. STANDARD INDEXES REFER TO THE LATEST EDITION OF FDOT "ROADWAY AND TRAFFIC DESIGN STANDARDS".
18. ALL STORM SEWER PIPE SHALL BE REINFORCED CONCRETE CLASS III (ASTM C-76) WITH RUBBER GASKET JOINTS UNLESS OTHERWISE NOTED ON PLANS. ALL INLETS, MANHOLES AND JUNCTION BOXES SHALL CONFORM TO THE FLORIDA DOT STANDARD SPECIFICATIONS FOR ROAD AND BRIDGE CONSTRUCTION LATEST EDITION. ALL INLETS ARE TO HAVE MANHOLE LIDS FOR MAINTENANCE ACCESS. ALL PIPE ARE TO BE CUT FLUSH WITH THE INSIDE WALLS OF MANHOLES AND JUNCTION BOXES.
19. PIPE LENGTHS SHOWN ARE APPROXIMATE AND TO THE CENTER OF DRAINAGE STRUCTURES WITH THE EXCEPTION OF MITERED END AND FLARED END SECTIONS WHICH ARE INCLUDED IN LENGTHS.
20. ALL DRAINAGE STRUCTURE GRATES AND COVERS WITHIN TRAFFIC AREAS SHALL BE TRAFFIC RATED FOR H-20 LOADINGS.
21. CONTRACTOR TO SOD ANY SUMPS AS INDICATED ON PLANS WITHIN ONE WEEK FOLLOWING CONSTRUCTION OF THE SUMPS.
22. ALL STORM DRAINAGE STRUCTURES DEEPER THAN TEN (10) FEET TO HAVE LADDER BARS.
23. CONTRACTOR IS RESPONSIBLE FOR OBTAINING THE NECESSARY DEWATERING PERMITS FROM THE LOCAL WATER MANAGEMENT DISTRICT OR OTHER REGULATORY AGENCY.
24. PROTECTION OF EXISTING STORM SEWERS SYSTEMS: DURING CONSTRUCTION, ALL STORM SEWER INLETS IN THE VICINITY OF THE PROJECT SHALL BE PROTECTED BY SEDIMENT TRAPS SUCH AS SECURED HAY BALES, SOD, STONE, ETC., WHICH SHALL BE MAINTAINED AND MODIFIED AS REQUIRED BE CONSTRUCTION PROGRESS.
25. MATERIALS AND CONSTRUCTION METHODS FOR STREETS AND STORM DRAINAGE CONSTRUCTION SHALL BE IN ACCORDANCE WITH THE LOCAL REGULATORY AGENCY AND THE FLORIDA DEPARTMENT OF TRANSPORTATION STANDARD SPECIFICATIONS FOR ROAD AND BRIDGE CONSTRUCTION, 1996, OR LATEST REVISION THEREOF AND SUPPLEMENTAL SPECIFICATIONS THERETO.
26. ALL RELOCATION OR MODIFICATION OF PROPOSED STORM SEWER SYSTEM SHALL NOT BE MADE WITHOUT THE APPROVAL OF THE ENGINEER OF RECORD.
27. ALL BACKFILL OVER STORM SEWER PIPE THAT IS TO BE INSTALLED UNDER ROADWAYS OR WITHIN THE EMBANKMENT, ETC. OF THE ROADWAY IS TO BE COMPACTED TO 98% DENSITY AS DETERMINED BY AASHTO T-180 PER PASCO COUNTY ENGINEERING SERVICES DEPARTMENT TESTING SPECIFICATIONS FOR CONSTRUCTION OF ROADS, STORM DRAINAGE, AND UTILITIES, OCTOBER 2006.
28. IF LIMESTONE BEDROCK IS ENCOUNTERED DURING CONSTRUCTION OF THE SURFACE WATER MANAGEMENT SYSTEM. THE DISTRICT MUST BE NOTIFIED AND CONSTRUCTION IN THE AFFECTED AREA SHALL CEASE.
29. NO EXCAVATIONS SHALL EXTEND BELOW THE PERMITTED DEPTHS/ELEVATIONS SHOWN ON THE PLANS. NO CONFINING LAYER OF CLAYEY MATERIAL SHALL BE BREACHED AND/OR LIMEROCK MATERIAL SHALL BE EXCAVATED, REGARDLESS IF THESE MATERIALS ARE ENCOUNTERED ABOVE THE PERMITTED DEPTHS/ELEVATIONS. IF SUCH ARE DISCOVERED DURING EXCAVATION, THEN THE GEOTECHNICAL ENGINEER SHALL BE NOTIFIED AND EXCAVATION CEASE IN THAT AREA. IF IT IS DETERMINED THAT SUCH MATERIAL IS NON-CONFINING AND IS WITHIN THE LIMITS OF THE PERMITTED PLANS THEN EXCAVATION MAY CONTINUE. NO CLAY MATERIAL SHALL BE LEFT EXPOSED IN ANY POND. WHERE CLAY OR SANDY-CLAYS ARE EXPOSED AT THE PERMITTED BOTTOM OR SIDE LIMITS OF THE EXCAVATION, THE CONTRACTOR SHALL OVER-EXCAVATE BY A MINIMUM OF TWELVE (12) INCHES AND BACKFILL WITH CLEAN SANDS TO PREVENT SUSPENSION OF FINE PARTICLES IN THE WATER COLUMN. IN NO INSTANCE SHALL THE CONTRACTOR OVER-EXCAVATE THE BOTTOM OF THE POND IN A WAY TO COMPROMISE A CONFINING LAYER OF CLAY.
30. THE STORM DRAINAGE PIPING AND FILTRATION SYSTEM SHALL BE SUBJECT TO A VISUAL OBSERVATION BY THE OWNER'S ENGINEER PRIOR TO THE PLACEMENT OF BACKFILL. CONTRACTOR TO NOTIFY THE ENGINEER 48 HOURS IN ADVANCE TO SCHEDULE.
31. THE CONTRACTOR SHALL MAINTAIN THE STORM DRAINAGE SYSTEMS UNTIL FINAL ACCEPTANCE OF THE PROJECT. THE STORM SYSTEM WILL BE REVIEWED BY THE OWNER'S ENGINEER PRIOR TO FINAL ACCEPTANCE.
32. THE CONTRACTOR IS RESPONSIBLE FOR COORDINATING APPLICABLE TESTING WITH THE SOILS ENGINEER. TEST WILL BE REQUIRED FOR EMBANKMENT, SUBGRADE, SOIL CEMENT BASE COURSE AND ASPHALT SURFACE COURSE. ALL TESTING SHALL BE IN ACCORDANCE WITH THE PASCO COUNTY SPECIFICATIONS.
33. SOIL ENGINEER TO SUPPLY THE ENGINEER WITH A PHOTOCOPY OF ALL RESULTS. THE SOILS ENGINEER IS TO VERIFY TO THE ENGINEER OF RECORD IN WRITING THAT ALL TESTING REQUIREMENTS REQUIRED BY LOCAL REGULATORY AGENCY AND THE FLORIDA DEPARTMENT OF TRANSPORTATION(FDOT) FOR THE IMPROVEMENTS AS REQUIRED BY THE CONSTRUCTION DRAWINGS HAVE BEEN SATISFIED.
34. CONTRACTOR TO REVIEW SOILS REPORTS AND BORINGS PRIOR TO BIDDING THE PROJECT AND COMMENCING CONSTRUCTION.
35. THE DEVELOPER MAY PROVIDE SIDEWALKS IN EXCESS OF THE MINIMUM COUNTY REQUIREMENTS. THE SIDEWALKS, AS DEPICTED IN THESE DOCUMENTS, MAY BE CONSTRUCTED SIMILAR TO WHAT IS DEPICTED, BUT IN NO CASE SHALL THE CONSTRUCTED SIDEWALKS BE LESS THAN WHAT IS REQUIRED BY CODE.

STANDARD FIRE PROTECTION NOTES:

1. ALL PROJECTS MUST COMPLY WITH PASCO COUNTY FIRE HYDRANT ORDINANCE NO. 46-51.
2. FIRE HYDRANTS SHALL BE INSTALLED AND IN SERVICE PRIOR TO THE ACCUMULATION OF COMBUSTIBLES.
3. PER THE NATIONAL FIRE ASSOCIATION, NFPA-1, 16.4.3.1.3: WHERE UNDERGROUND WATER MAINS AND HYDRANTS ARE TO BE PROVIDED, THEY SHALL BE INSTALLED, COMPLETED, AND IN SERVICE PRIOR TO CONSTRUCTION WORK.
4. PER NFPA-1, 18.3.4.1: CLEARANCES OF 1.5 FEET IN FRONT OF AND TO THE SIDES OF THE FIRE HYDRANT WITH A 4 FOOT CLEARANCE TO THE REAR MUST BE MAINTAINED AT ALL TIMES.
5. GATED ENTRIES REQUIRE A SIREN OPERATING SYSTEM OR A 3M OPTICOM SYSTEM FOR EMERGENCY ACCESS.

GEOTECHNICAL NOTES:

1. SHOULD ANY NOTICEABLE SOIL SLUMPING OR SINKHOLE FORMATION BECOME EVIDENT, THE APPLICANT/DEVELOPER SHALL IMMEDIATELY NOTIFY THE COUNTY, TAMPA BAY WATER (TBW), AND SWFWMD, AND ADOPT ONE OR MORE OF THE FOLLOWING PROCEDURES AS DETERMINED TO BE APPROPRIATE BY THE COUNTY AND SWFWMD:
2. IF THE SLUMPING OR SINKHOLE FORMATION BECOMES EVIDENT BEFORE OR DURING CONSTRUCTION ACTIVITIES, STOP ALL WORK (EXCEPT FOR MITIGATION ACTIVITIES) IN THE AFFECTED AREA AND REMAIN STOPPED UNTIL THE COUNTY AND SWFWMD APPROVE RESUMING CONSTRUCTION ACTIVITIES.
3. TAKE IMMEDIATE MEASURES TO ENSURE NO SURFACE WATER DRAINS INTO THE AFFECTED AREAS.
4. VISUALLY INSPECT THE AFFECTED AREA.
5. EXCAVATE AND BACKFILL OR GROUT AS REQUIRED TO FILL THE AFFECTED AREA AND PREVENT FURTHER SUBSIDENCE.
6. USE SOIL REINFORCEMENT MATERIALS IN THE BACKFILLING OPERATION, WHEN APPROPRIATE.
7. IF THE AFFECTED AREA IS IN THE VICINITY OF A WATER-RETENTION AREA, MAINTAIN A MINIMUM DISTANCE OF TWO FEET FROM THE BOTTOM OF THE RETENTION POND TO THE SURFACE OF THE LIME-ROCK OR KARST CONNECTION.
8. IF THE AFFECTED AREA IS IN THE VICINITY OF A WATER-RETENTION AREA AND THE ABOVE METHODS DO NOT STABILIZE THE COLLAPSE, RELOCATE THE RETENTION AREA.
9. DISCHARGE OF STORM-WATER INTO DEPRESSIONS WITH DIRECT OR DEMONSTRATED HYDROLOGIC CONNECTION TO THE FLORIDAN AQUIFER SHALL BE PROHIBITED.
10. CONTRACTOR SHALL REVIEW THE REPORT OF STORMWATER POND AND ROADWAY SOIL STUDY FOR EPPERSON RANCH PREPARED BY FAULKNER ENGINEERING SERVICES, INC., DATED NOVEMBER 2006 FOR GEOTECHNICAL RECOMMENDATION.

PAUL E. SKIDMORE
LICENSE NO. 39631
STATE OF FLORIDA
PROFESSIONAL ENGINEER

JOB NO.	EPN	DATE	DESIGNED	DRAWN	CHECKED	Q.C.
506-100C	213	5-1-2015	RAH	RAH	PES	

NO.	DATE	REVISIONS	APP'D BY

DESIGNED FOR
ASTURIA COMMUNITY DEVELOPMENT DISTRICT
605 PALENCIA CLUB DRIVE, ST. AUGUSTINE, FLORIDA 32095
PHONE: (904) 810-0500 - FAX: (904) 810-0525

PROJECT NAME
Asturia | **PROMENADE PARKWAY**

SHEET NAME
GENERAL NOTES

FLORIDA DESIGN CONSULTANTS, INC.
THINK IT. ACHIEVE IT.
3030 STARKEY BOULEVARD, NEW PORT RICHEY, FLORIDA 34655
PHONE: (800) 532 - 1047 FAX: (727) 848 - 3648 WWW.FLDESIGN.COM C.A. NO. 7421

SHEET 2 OF 38

©Copyright 2015 Florida Design Consultants, Inc. Drawings and concepts may not be used or reproduced without written permission.

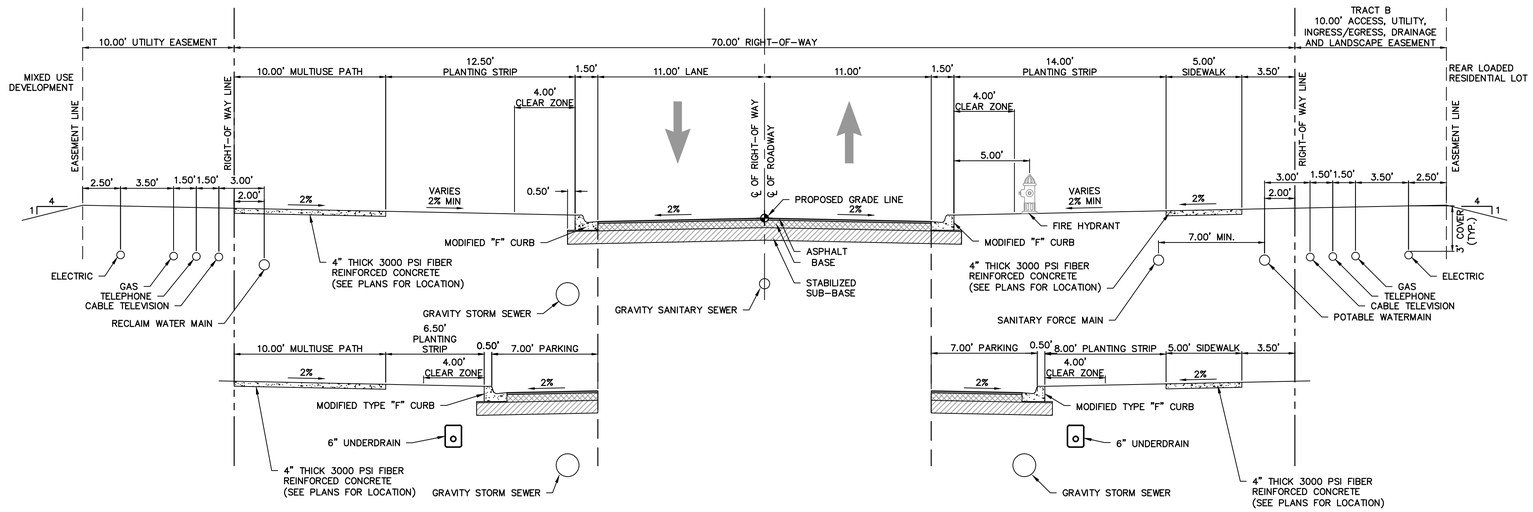

7' ON-STREET PARKING

7' ON-STREET PARKING

TYPICAL SECTION - ST70 (TYPE A ROADWAY)

(DESIGN SPEED / POSTED SPEED 25 MPH) NTS

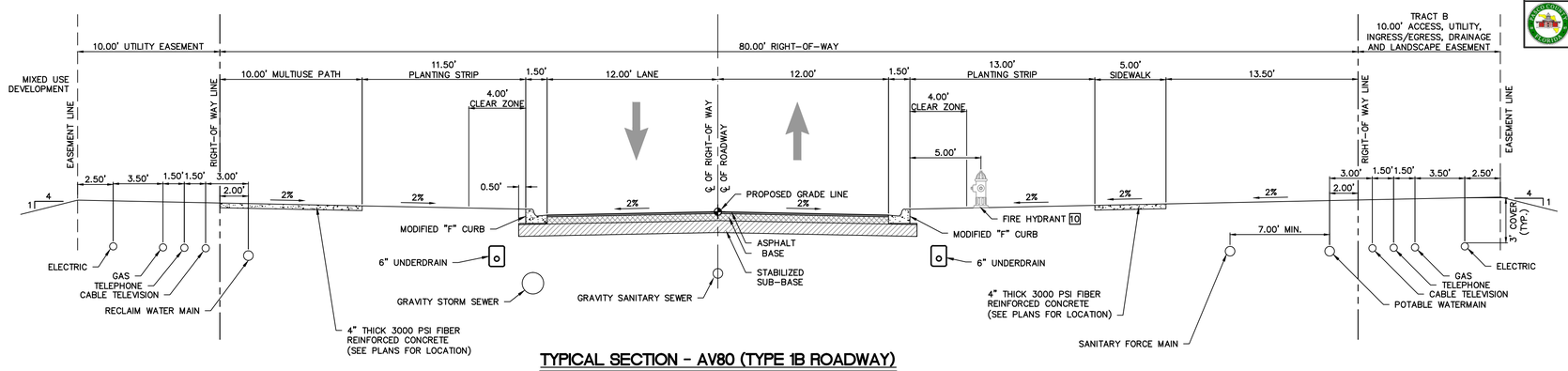

TYPICAL SECTION - AV80 (TYPE 1B ROADWAY)

(DESIGN SPEED 30 MPH / POSTED SPEED 25 MPH) NTS

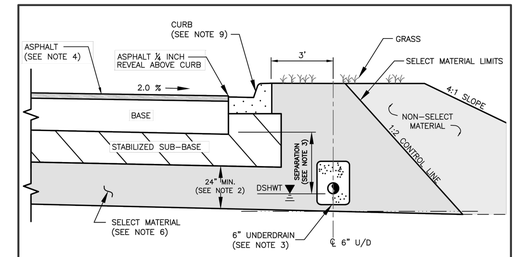

SECTIONAL VIEW
NTS

NOTES:

1. THE MINIMUM VERTICAL SEPARATION BETWEEN THE DESIGN SEASONAL HIGH WATER TABLE (DSHWT) AND THE BOTTOM OF THE BASE AT THE LOWEST EDGE OF PAVEMENT SHALL BE AS FOLLOWS:
   A. LIMEROCK BASE 24 INCH
   B. SOIL CEMENT BASE 12 INCH
   C. CRUSHED CONCRETE BASE (IF APPROVED) 12 INCH
   D. ASPHALT BASE COURSE (ABC) 12 INCH
2. A MINIMUM TWO (2) FEET OF SELECT MATERIAL CONSISTING OF A-1, A-3 OR A-2-4 WITH A MAXIMUM 15% PASSING THE #200 SIEVE BELOW THE STABILIZED SUB-BASE.
3. IF THE VERTICAL SEPARATION BETWEEN DSHWT AND BOTTOM OF BASE IS LESS THAN 2 FEET, UNDERDRAINS SHALL BE CONSTRUCTED ALONG BOTH SIDES OF THE ROAD. IF 2-3 FEET, UNDERDRAINS SHALL BE CONSTRUCTED ALONG ONE SIDE. THE INVERT OF A SIX (6) INCH UNDERDRAIN SHALL BE TWO (2) FEET MINIMUM BELOW THE BOTTOM OF THE BASE.
4. TYPE 2 THRU TYPE 5 ROADWAYS SHALL CONTAIN A MINIMUM OF 1.5 INCH OF SP ASPHALTIC CONCRETE. COLLECTOR ROADWAYS SHALL HAVE A MINIMUM OF THREE (3) INCHES OF SP ASPHALTIC CONCRETE. TYPE 1 ROADWAYS MAY BE COMPLETED IN STAGES, INITIALLY 2.25 INCHES OF SP 12.5 (S-1) ASPHALT COURSE WITH REQUIRED PAVEMENT MARKINGS AND 0.75 INCHES OF SP 9.5 (S-3) COURSE INSTALLED WITH ANY THERMOPLASTIC STRIPES, PRIOR TO RELEASE OF THE ASSURANCE FOR MAINTENANCE.
5. THE ROAD DESIGN DRAWINGS SHALL CONTAIN SOIL BORING LOCATIONS WITH EXISTING SOIL DATA, OBSERVED WATER LEVEL AND DSHWT SURFACE. UNDERDRAIN OUTFALL POND DATA AND PROXIMATE WETLAND HYDRO PERIOD ELEVATIONS SHALL ALSO BE IDENTIFIED.
6. SELECT MATERIAL SHALL BE PLACED PER FDOT INDEX DRAWINGS 500 & 505.
7. THE REQUIRED MINIMUM STRUCTURAL NUMBER (SN) SHALL BE:
   2.34 MIN. TYPE 2 ROADWAY
   3.50 MIN. TYPE 1 ROADWAYS
   3.70 MIN. COUNTY COLLECTOR
   4.00 MIN. COUNTY ARTERIAL
8. SOIL CEMENT BASE SHALL NOT BE CONSTRUCTED OVER STABILIZED SUBGRADE EXCEEDING LBR 20. THE COUNTY ASSIGNED LAYER COEFFICIENT FOR A MAXIMUM 12 INCH DEPTH, LBR 20 SHALL BE 0.04 PER INCH.
9. CURB DESIGN IS SITE SPECIFIC AND SHALL BE IDENTIFIED ON PLANS.

NOTE:
NO DEVIATIONS TO THIS DETAIL WILL BE PERMITTED UNLESS APPROVED BY THE COUNTY ENGINEER.
ANY PROPOSED ALTERATIONS SHALL BE CLEARLY IDENTIFIED AND HIGHLIGHTED ON DETAIL.

PASCO COUNTY ENGINEERING SERVICES	ROADWAY DESIGN CRITERIA	Sheet No. 1 of 1
DESIGN STANDARDS	APPROVED BY JCW / BCC APPROVAL / REVISED	Index No. 100

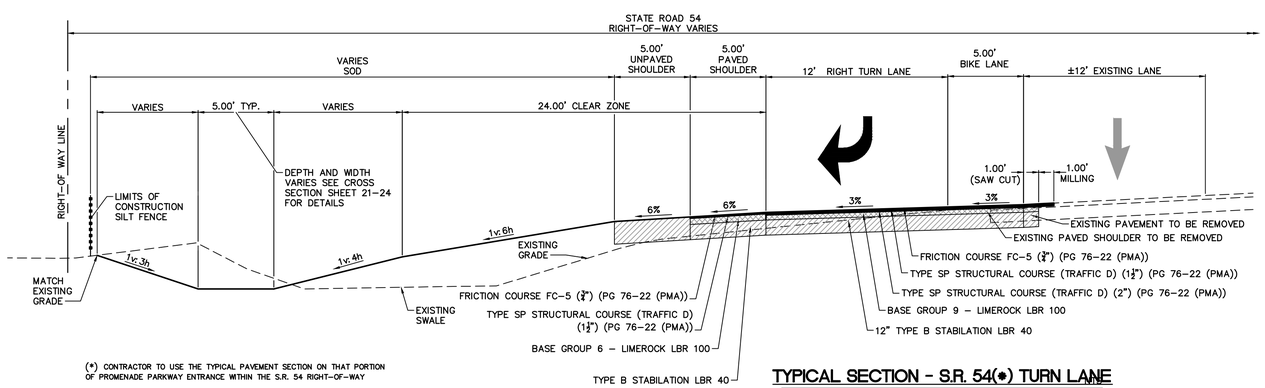

(*) CONTRACTOR TO USE THE TYPICAL PAVEMENT SECTION ON THAT PORTION OF PROMENADE PARKWAY ENTRANCE WITHIN THE S.R. 54 RIGHT-OF-WAY

TYPICAL SECTION - S.R. 54(*) TURN LANE

(DESIGN SPEED 60 MPH
POSTED SPEED 55 MPH)

TYPE 1B AND TYPE "A" STRUCTURAL NUMBER CALCULATION

STANDARD SECTION

LAYER DESCRIPTION	COEFF	DEPTH	SN	
1" TYPE FC-3 ASPHALT	0.44	1.0	0.44	
2" TYPE SP-12.5 ASPHALT	0.44	2.0	0.88	
9" CRUSHED CONCRETE BASE (LBR-150)	0.15	9.0	1.35	
12" STABILIZED SUB-BASE (LBR-40)	0.08	12.0	0.96	
TOTAL PROVIDED			3.63	> 3.50 (MIN)

ALTERNATIVE "A"

LAYER DESCRIPTION	COEFF	DEPTH	SN	
1" TYPE FC-3 ASPHALT	0.44	1.0	0.44	
2" TYPE SP-12.5 ASPHALT	0.44	2.0	0.88	
12" SOIL CEMENT (300 PSI)	0.15	12.0	1.80	
12" STABILIZED SUB-BASE (LBR-20)	0.04	12.0	0.48	
TOTAL PROVIDED			3.60	> 3.50 (MIN)

NOTE: MINIMUM ROADWAY STRUCTURAL COEFFICIENTS AND DESIGN STANDARDS WERE BASED ON CHAPTER 900, SECTION 901.6, STREET DESIGN AND DEDICATION REQUIREMENTS, OF THE PASCO COUNTY LAND DEVELOPMENT CODE.

PAUL E. SKIDMORE
LICENSE NO. 39631
STATE OF FLORIDA
PROFESSIONAL ENGINEER

JOB NO.	SITE	DATE	DESIGNED	DRAWN	CHECKED	QC
506-100C	213	5-1-2015	RAH	RAH		PES

NO.	DATE	REVISIONS	BY	APP

DESIGNED FOR
ASTURIA COMMUNITY DEVELOPMENT DISTRICT
605 PALMONA CLUB DRIVE, ST. AUGUSTINE, FLORIDA 32095
PHONE: (904) 810-0500 - FAX: (904) 810-0525

PROJECT NAME: Asturia | **PROMENADE PARKWAY**

SHEET NAME: **TYPICAL SECTIONS & DETAILS**

FLORIDA DESIGN CONSULTANTS, INC.
THINK IT. ACHIEVE IT.
3030 STARKEY BOULEVARD, NEW PORT RICHEY, FLORIDA 34655
PHONE: (800) 532 - 1047 FAX: (727) 848 - 3648 WWW.FLDESIGN.COM C.A. NO. 7421

©Copyright 2015 Florida Design Consultants, Inc. Drawings and concepts may not be used or reproduced without written permission.

K:\213\ProData\ConstDocs\Plans\Promenade Parkway\213_PROMENADE-RTYP.DWG - May 27, 2015 @ 12:06pm - mpriske

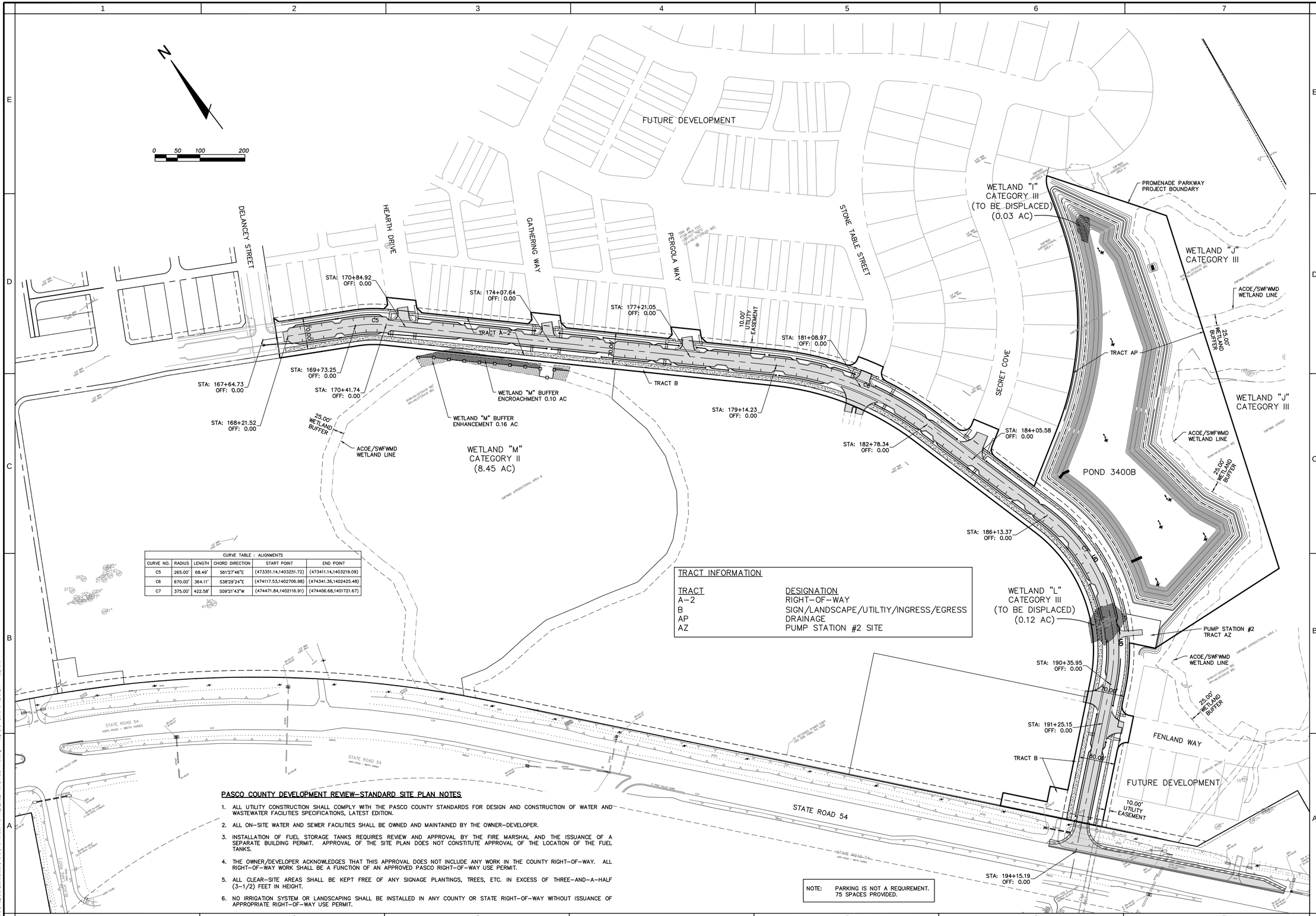

CURVE TABLE : ALIGNMENTS					
CURVE NO.	RADIUS	LENGTH	CHORD DIRECTION	START POINT	END POINT
C5	265.00'	68.49'	S61°27'46"E	(473351.14,1403251.72)	(473411.14,1403219.09)
C6	670.00'	364.11'	S38°29'24"E	(474117.53,1402706.98)	(474341.36,1402425.48)
C7	375.00'	422.58'	S09°21'43"W	(474471.84,1402116.91)	(474406.68,1401721.67)

TRACT INFORMATION

TRACT	DESIGNATION
A-2	RIGHT-OF-WAY
B	SIGN/LANDSCAPE/UTILTIY/INGRESS/EGRESS
AP	DRAINAGE
AZ	PUMP STATION #2 SITE

PASCO COUNTY DEVELOPMENT REVIEW-STANDARD SITE PLAN NOTES

1. ALL UTILITY CONSTRUCTION SHALL COMPLY WITH THE PASCO COUNTY STANDARDS FOR DESIGN AND CONSTRUCTION OF WATER AND WASTEWATER FACILITIES SPECIFICATIONS, LATEST EDITION.
2. ALL ON-SITE WATER AND SEWER FACILITIES SHALL BE OWNED AND MAINTAINED BY THE OWNER-DEVELOPER.
3. INSTALLATION OF FUEL STORAGE TANKS REQUIRES REVIEW AND APPROVAL BY THE FIRE MARSHAL AND THE ISSUANCE OF A SEPARATE BUILDING PERMIT. APPROVAL OF THE SITE PLAN DOES NOT CONSTITUTE APPROVAL OF THE LOCATION OF THE FUEL TANKS.
4. THE OWNER/DEVELOPER ACKNOWLEDGES THAT THIS APPROVAL DOES NOT INCLUDE ANY WORK IN THE COUNTY RIGHT-OF-WAY. ALL RIGHT-OF-WAY WORK SHALL BE A FUNCTION OF AN APPROVED PASCO RIGHT-OF-WAY USE PERMIT.
5. ALL CLEAR-SITE AREAS SHALL BE KEPT FREE OF ANY SIGNAGE PLANTINGS, TREES, ETC. IN EXCESS OF THREE-AND-A-HALF (3-1/2) FEET IN HEIGHT.
6. NO IRRIGATION SYSTEM OR LANDSCAPING SHALL BE INSTALLED IN ANY COUNTY OR STATE RIGHT-OF-WAY WITHOUT ISSUANCE OF APPROPRIATE RIGHT-OF-WAY USE PERMIT.

NOTE: PARKING IS NOT A REQUIREMENT. 75 SPACES PROVIDED.

PAUL E. SKIDMORE
LICENSE
NO. 39631
STATE OF
FLORIDA
PROFESSIONAL ENGINEER

JOB NO.	506-100C
SHTS	213
DATE	5-1-2015
DESIGNED	RAH
DRAWN	RAH
CHECKED	PES
QC	

NO.	DATE	REVISIONS	APP'D

DESIGNED FOR:
ASTURIA COMMUNITY DEVELOPMENT DISTRICT
605 PALLADIO CLUB DRIVE, ST. AUGUSTINE, FLORIDA 32095
PHONE: (904) 810-0500 - FAX: (904) 810-0525

PROJECT NAME: Asturia | **PROMENADE PARKWAY**

SHEET NAME: **HORIZONTAL CONTROL PLAN**

FLORIDA DESIGN CONSULTANTS, INC.
THINK IT. ACHIEVE IT.
3030 STARKEY BOULEVARD, NEW PORT RICHEY, FLORIDA 34655
PHONE: (800) 532 - 1047 FAX: (727) 848 - 3648 WWW.FLDESIGN.COM C.A. NO. 7421

SHEET 4 OF 38

© Copyright 2015 Florida Design Consultants, Inc. Drawings and concepts may not be used or reproduced without written permission.

K:\2015\Projects\Constituent\Plans\Promenade Parkway\213_PROMENADE_PHC.dwg - May 27, 2015 @ 12:07pm - eayrlake

LEGEND

- = Overland Flow Direction
- = Swale Flow Direction
- = Concentrated Drainage Flow Direction
- 17 = Proposed Storm Structure Number
- +42.1 = Proposed Spot Elevation
- + 6.17 = Existing Spot Elevation
- = Proposed Storm Structure & Pipe
- (5A) = Existing Tree
- = Proposed Silt Fence
- = Proposed Double Silt Fence
- = Floating Turbidity Barrier
- = Wetland/Surface Water Jurisdictional Limit
- = Drop Curb for Sidewalk Connections
- = Limits of Buffer Encroachment
- = Limits of Wetland Impact
- = Limits of Buffer Enhancement

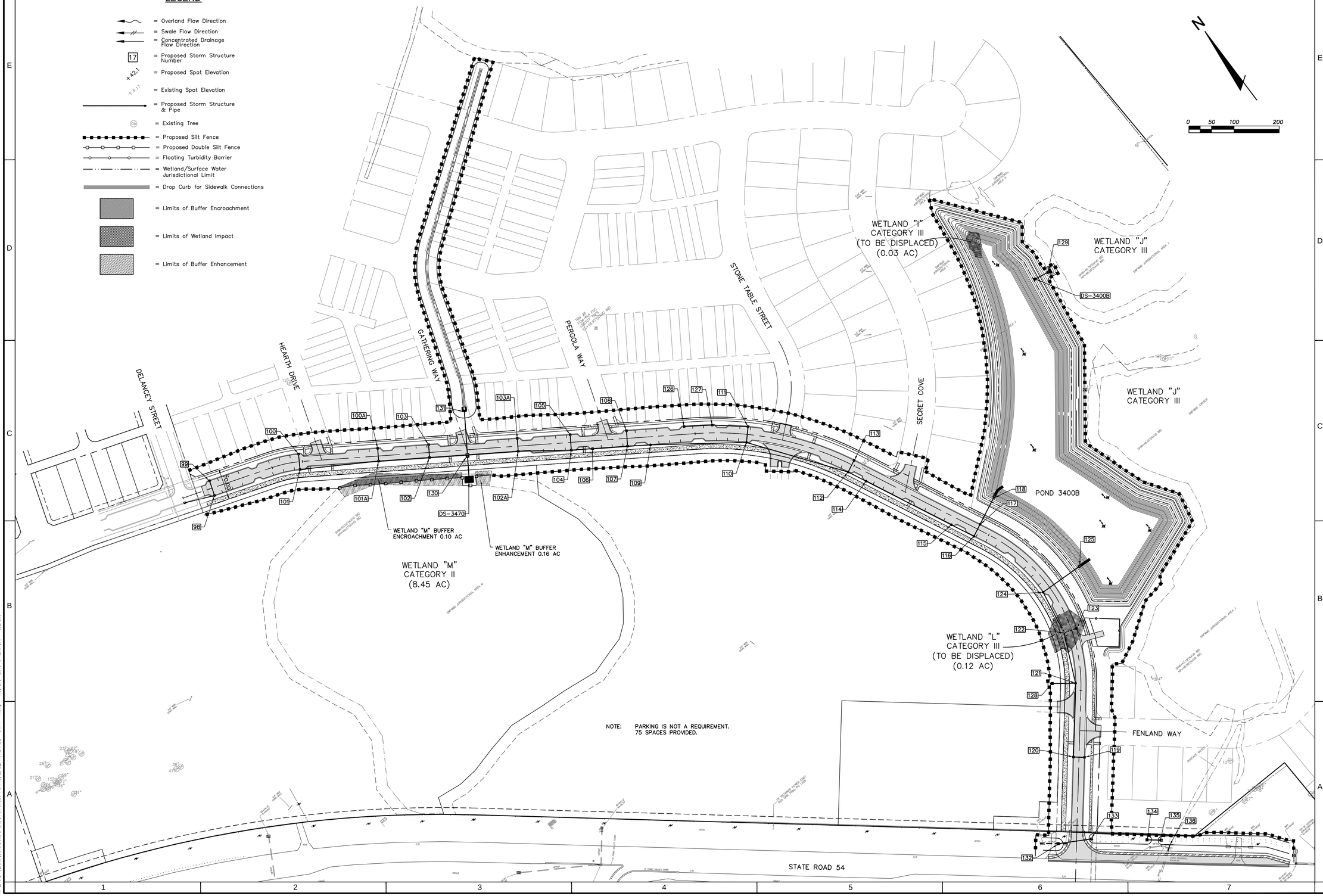

NOTE: PARKING IS NOT A REQUIREMENT.
75 SPACES PROVIDED.

PAUL E. SKIDMORE
LICENSE
NO. 39631
STATE OF FLORIDA
PROFESSIONAL ENGINEER

JOB NO.	506-100C
SHTS.	213
DATE	5-1-2015
DESIGNED	RAH
DRAWN	RAH
REVIEWED	PES

NO.	DATE	REVISIONS	APP'D

DESIGNED FOR
ASTURIA COMMUNITY DEVELOPMENT DISTRICT
600 PALMERA COURTYARD, 57 AVOCETTE, FLORIDA 32095
PHONE: (904) 810-0500 FAX: (904) 810-0505

PROJECT NAME
Asturia | **PROMENADE PARKWAY**

SHEET NAME
OVERALL DRAINAGE AND STORMWATER POLLUTION PREVENTION PLAN (1)

FLORIDA DESIGN CONSULTANTS, INC.
THINK IT. ACHIEVE IT.
3030 STARKEY BOULEVARD, NEW PORT RICHEY, FLORIDA 34655
PHONE: (800) 532 - 1047 FAX: (727) 848 - 3648 WWW.FLDESIGN.COM C.A. NO. 7421

© Copyright 2015 Florida Design Consultants, Inc. Drawings and concepts may not be used or reproduced without written permission.

K:\2213\ProjData\ConstDocs\Plans\Promenade Parkway\2213_PROMENADE-PSWPPP-1.dwg - May 27, 2015 @ 12:07pm - dayrlaw

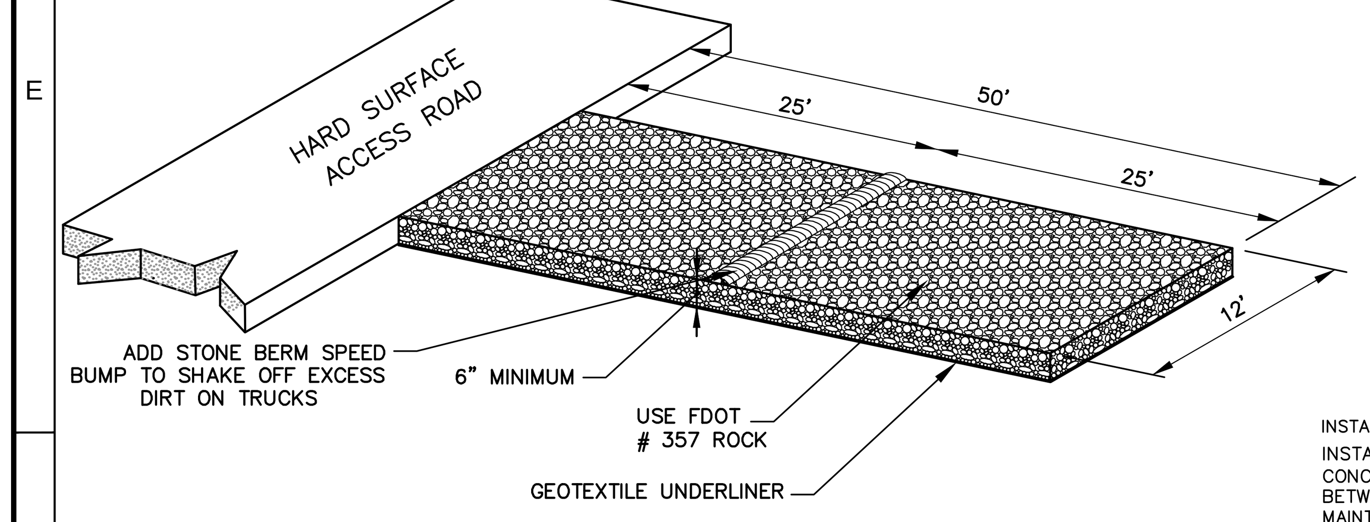

TEMPORARY CONSTRUCTION ACCESS

N.T.S.

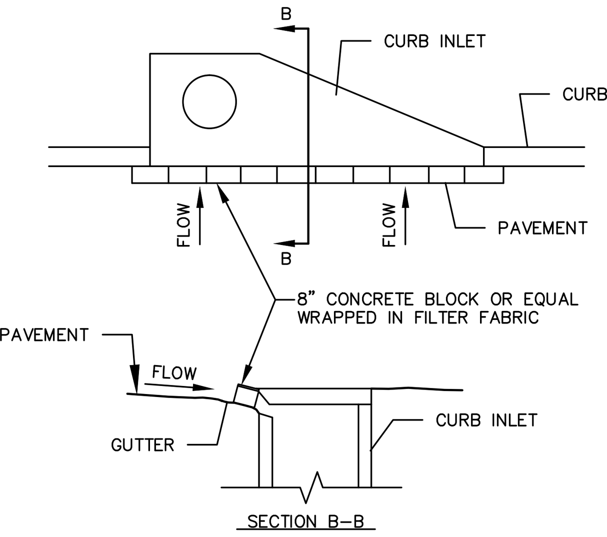

INSTALLATION:
INSTALL CURB INLET SEDIMENT BARRIER IMMEDIATELY AFTER PAVING. USE 8" CONCRETE BLOCK OR EQUAL WRAPPED IN FILTER FABRIC. PROVIDE A 4" GAP BETWEEN BARRIER AND INLET TO ALLOW OVERFLOW.
MAINTENANCE:
THE BARRIER SHALL BE INSPECTED DAILY AND AFTER EACH RAIN AND REPAIRS MADE AS NEEDED. SEDIMENT SHALL BE REMOVED WHEN THE SEDIMENT HAS ACCUMULATED TO ONE-HALP THE HEIGHT OF THE BARRIER. SEDIMENT SHALL NOT BE WASHED INTO THE INLET. IT SHALL BE REMOVED FROM THE SEDIMENT BARRIER AND DISPOSED OF AND STABILIZED SO THAT IT WILL NOT ENTER THE INLET, AGAIN.

CURB INLET SEDIMENT BARRIER

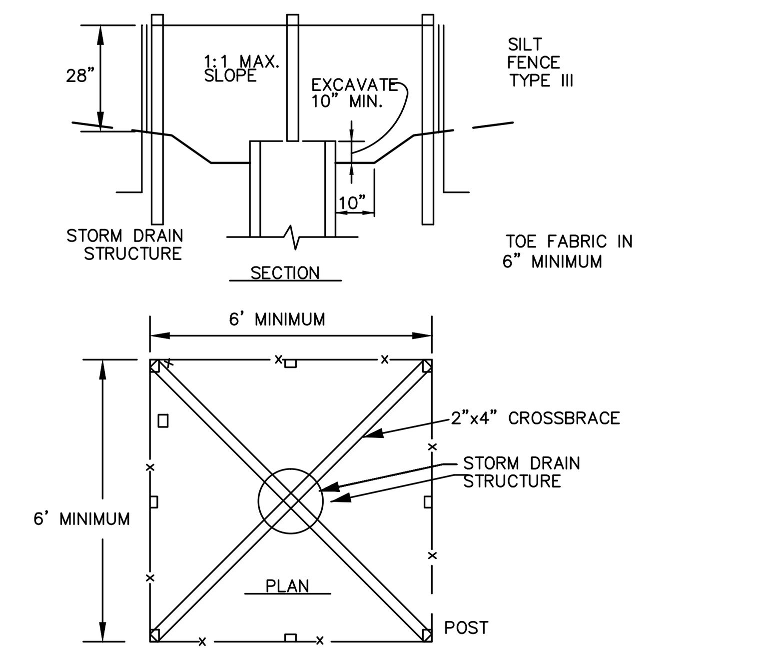

INSTALLATION:
TYPE III SILT FENCE SUPPORTED BY STEEL POST SHALL BE USED. THE STAKES SHALL BE SPACED EVENLY AROUND THE PERIMETER OF THE INLET A MAXIMUM OF 3 FEET APART, AND SECURELY DRIVEN INTO THE GROUND, APPROXIMATELY 18 INCHES DEEP. THE FABRIC SHALL BE ENTRENCHED 12 INCHES AND BACKFILLED WITH CRUSHED STONE OR COMPACTED SOIL. FABRIC AND WIRE SHALL BE SECURELY FASTENED TO THE POST, AND FABRIC ENDS MUST BE OVERLAPPED A MINIMUM OF 18 INCHES OR WRAPPED TOGETHER AROUND A POST TO PROVIDE A CONTINUOUS FABRIC BARRIER AROUND THE INLET.
MAINTENANCE:
THE BARRIER SHALL BE INSPECTED DAILY AND AFTER EACH RAIN AND REPAIRS MADE AS NEEDED. SEDIMENT SHALL BE REMOVED WHEN THE SEDIMENT HAS ACCUMULATED TO ONE-HALF THE HEIGHT OF THE BARRIER. SEDIMENT SHALL NOT BE WASHED INTO THE INLET. IT SHALL BE REMOVED FROM THE SEDIMENT BARRIER AND DISPOSED OF AND STABILIZED SO THAT IT WILL NOT ENTER THE INLET, AGAIN.

INLET SEDIMENT BARRIER
FILTER FABRIC WITH SUPPORTING FRAME

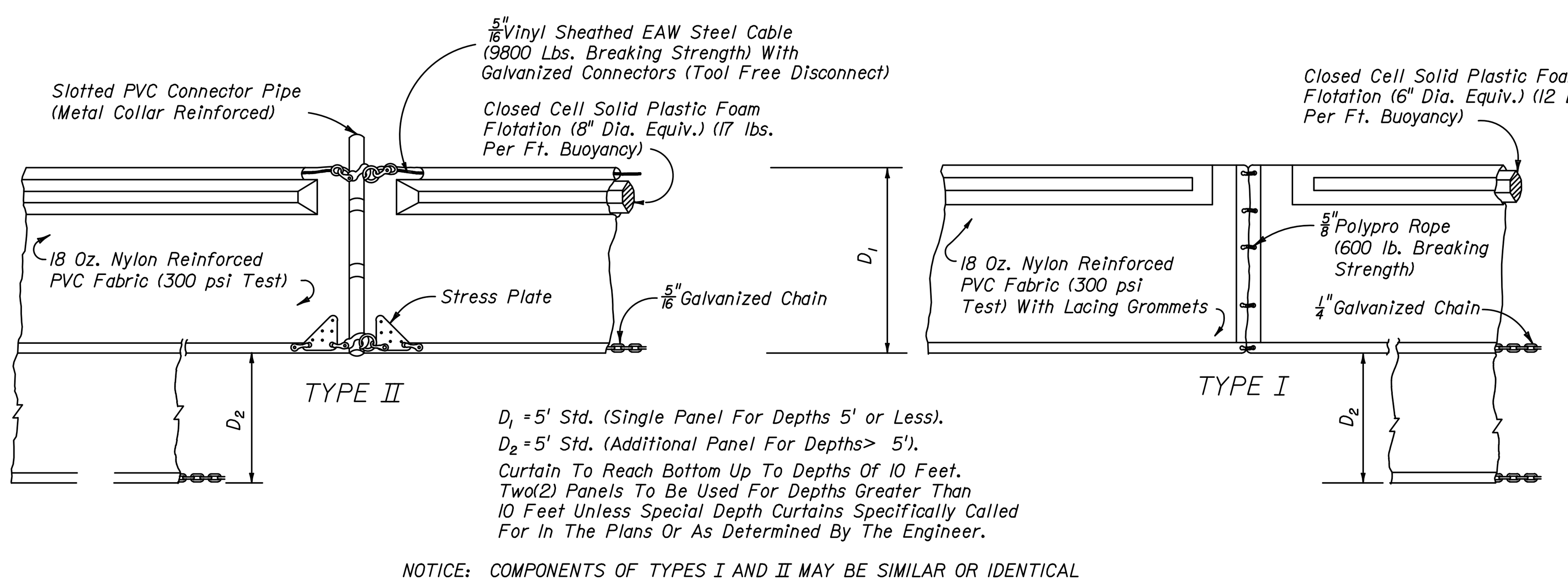

D_1 = 5' Std. (Single Panel For Depths 5' or Less).
D_2 = 5' Std. (Additional Panel For Depths > 5').
Curtain To Reach Bottom Up To Depths Of 10 Feet. Two(2) Panels To Be Used For Depths Greater Than 10 Feet Unless Special Depth Curtains Specifically Called For In The Plans Or As Determined By The Engineer.

NOTICE: COMPONENTS OF TYPES I AND II MAY BE SIMILAR OR IDENTICAL TO PROPRIETARY DESIGNS. ANY INFRINGEMENT ON THE PROPRIETARY RIGHTS OF THE DESIGNER SHALL BE THE SOLE RESPONSIBILITY OF THE USER. SUBSTITUTIONS FOR TYPES I AND II SHALL BE AS APPROVED BY THE ENGINEER.

FLOATING TURBIDITY BARRIERS

D.O.T. INDEX #103 N.T.S.

MAINTENANCE OF SILT SCREENS:
SILT SCREENS SHALL BE INSPECTED AFTER EACH RAINFALL EVENT FOR SIGNS OF DETERIORATION OR FAILURE. DETERIORATION OF A SILT SCREEN SHALL BE CONSTRUED TO MEAN THAT THE SILT SCREEN HAS LIMITED EFFECTIVENESS OR CAPACITY FOR THE FUNCTION OF TRAPPING SEDIMENT, DUE TO PROBLEMS SUCH AS, BUT NOT LIMITED TO, EXCESSIVE BUILDUP OF SEDIMENT OR CONSTRUCTION ACCIDENT. WHEN A SILT SCREEN BECOMES DETERIORATED, IT SHALL BE IMMEDIATELY REMEDIED AT THE DIRECTION OF THE ENGINEER BY SUCH MEANS AS REMOVAL OF THE EXCESSIVE BUILDUP OF SILT, STRAIGHTENING AND TIGHTENING OF THE SCREEN, OR ANY OTHER SUCH MEASURE DEEMED NECESSARY. FAILURE OF A SILT SCREEN SHALL BE CONSTRUED TO MEAN THAT THE SILT SCREEN IS NO LONGER CAPABLE OF FUNCTIONING TO TRAP SEDIMENT DUE TO A RIP, TEAR, OVERTOPPING BY SEDIMENT, BIODEGRADATION, CONSTRUCTION ACCIDENT, OR ANY OTHER SUCH MEANS. WHEN A SILT SCREEN IS DEEMED BY THE ENGINEER TO HAVE FAILED, IT SHALL BE IMMEDIATELY REPLACED WITH NEW SILT SCREEN WITHIN THE LIMITS DIRECTED BY THE ENGINEER. PREVENTATIVE MAINTENANCE OF THE SLIT SCREEN SHALL BE ACCOMPLISHED BY WEEKLY INSPECTION FOR SIGNS OF DETERIORATION OR FAILURE DURING PERIODS OF NO RAINFALL EVENT.

MAINTENANCE OF HAY BALES:
HAY BALES SHALL BE INSPECTED AFTER EACH RAINFALL EVENT FOR SIGNS OF DETERIORATION OR FAILURE. DETERIORATION OF A HAY BALE SCREEN SHALL BE CONSTRUED TO MEAN THAT THE HAY BALE SCREEN HAS LIMITED EFFECTIVENESS OR CAPACITY FOR THE FUNCTION OF TRAPPING SEDIMENT, DUE TO PROBLEMS SUCH AS, BUT NOT LIMITED TO, EXCESSIVE BUILDUP OF SEDIMENT OR CONSTRUCTION ACCIDENT. WHEN A HAY BALE SCREEN BECOMES DETERIORATED, IT SHALL BE IMMEDIATELY REMEDIED AT THE DIRECTION OF THE ENGINEER BY SUCH MEANS AS REMOVAL OF THE EXCESSIVE BUILDUP OF SILT, STRAIGHTENING AND REALIGNING OF THE SCREEN, OR ANY OTHER SUCH MEASURE DEEMED NECESSARY. FAILURE OF A HAY BALE SCREEN SHALL BE CONSTRUED TO MEAN THAT THE HAY BALE SCREEN IS NO LONGER CAPABLE OF FUNCTIONING TO TRAP SEDIMENT DUE TO OVERTOPPING BY SEDIMENT, BIODEGRADATION, CONSTRUCTION ACCIDENT, OR ANY OTHER SUCH MEANS. WHEN A HAY BALE SCREEN IS DEEMED BY THE ENGINEER TO HAVE FAILED, IT SHALL BY IMMEDIATELY REPLACED WITH A NEW HAY BALE SCREEN WITHIN THE LIMITS DIRECTED BY THE ENGINEER. PREVENTATIVE MAINTENANCE OF THE HAY BALE SCREEN SHALL BE ACCOMPLISHED BY WEEKLY INSPECTION FOR SIGNS OF DETERIORATION OR FAILURE DURING PERIODS OF NO RAINFALL EVENT.

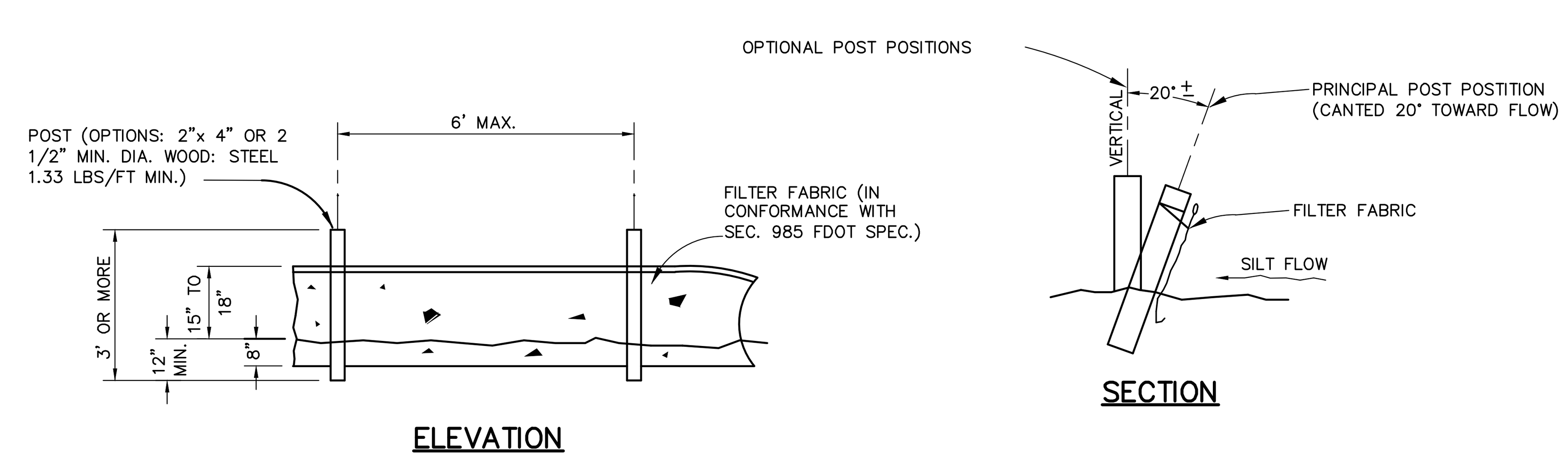

TYPE III SILT FENCE

D.O.T. INDEX #102 N.T.S.

SOUTHWEST FLORIDA WATER MANAGEMENT DISTRICT CERTIFICATION

CONSTRUCTION SURFACE WATER MANAGEMENT PLAN (CSWMP)
ASTURIA, PROMENADE PARKWAY CONSTRUCTION PLANS.

1. THE CSWMP CONSISTS OF PLAN SHEETS 5 AND 6 SHOWING EROSION PROTECTION DEVICES TO BE UTILIZED ON THE PROJECT.

2. THE APPLICANT/OWNER OR AUTHORIZED AGENT HAS REVIEWED THE CSWMP AND HAS SIGNED THE CSWMP WHERE REQUIRED BELOW.

3. THE CSWMP SHALL BE PART OF THE FINAL CONSTRUCTION PLANS FOR THE PERMITTED SURFACE WATER MANAGEMENT SYSTEM.

SIGNATURE: ______________________________

NAME: ______________________________ DATE: ______________

APPLICANT ☐ OWNER ☐ AUTHORIZED AGENT ☐

I CERTIFY UNDER PENALTY OF LAW THAT THIS DOCUMENT AND ALL ATTACHMENTS WERE PREPARED UNDER MY DIRECTION OR SUPERVISION IN ACCORDANCE WITH A SYSTEM DESIGNED TO ASSURE THAT QUALIFIED PERSONNEL PROPERLY GATHERED AND EVALUATED THE INFORMATION SUBMITTED. BASED ON MY INQUIRY OF THE PERSON OR PERSONS WHO MANAGE THE SYSTEM, OR THOSE PERSONS DIRECTLY RESPONSIBLE FOR GATHERING THE INFORMATION, THE INFORMATION SUBMITTED IS, TO THE BEST OF MY KNOWLEDGE AND BELIEF, TRUE, ACCURATE, AND COMPLETE. I AM AWARE THAT THERE ARE SIGNIFICANT PENALTIES FOR SUBMITTING FALSE INFORMATION, INCLUDING THE POSSIBILITY OF FINE AND IMPRISONMENT FOR KNOWING VIOLATIONS.

______________________________ ______________
NAME (OPERATOR AND/OR RESPONSIBLE AUTHORITY) DATE

NAME	TITLE	COMPANY NAME, ADDRESS AND PHONE NUMBER	DATE
*			

I CERTIFY UNDER PENALTY OF LAW THAT I UNDERSTAND, AND SHALL COMPLY WITH, THE TERMS AND CONDITIONS OF THE STATE OF FLORIDA GENERIC PERMIT FOR STORMWATER DISCHARGE FROM LARGE AND SMALL CONSTRUCTION ACTIVITIES AND THIS STORMWATER POLLUTION PREVENTION PLAN PREPARED THEREUNDER.

* NPDES CONTRACTOR AND SUBCONTRACTOR CERTIFICATION TO BE COMPLETED AFTER CONTRACTORS HAVE BEEN SELECTED.

1. SITE DESCRIPTION

A. PROJECT DESCRIPTION:

THE DEVELOPER / APPLICANT PROPOSES TO CONSTRUCT A ROAD LOCATED IN PASCO COUNTY, FLORIDA. CONSTRUCTION WILL CONSIST OF CLEARING, GRUBBING, EARTHWORK, INSTALLATION OF THE INFRASTRUCTURE, BACK FILLING, PAVING AND GRADING.

B. MAJOR SOIL DISTURBING ACTIVITIES:

SOIL DISTURBING ACTIVITIES FOR THIS PROJECT WILL INCLUDE CLEARING, GRUBBING, EARTHWORK, INSTALLATION OF PAVING, DRAINAGE AND SANITARY STRUCTURES, WATER MAIN INSTALLATION BACK FILLING AND GRADING.

THE CONTRACTOR WILL BE RESPONSIBLE FOR PROVIDING TEMPORARY OR PERMANENT STABILIZATION AS SOON AS POSSIBLE FOR AREAS OF THE SITE WHERE CONSTRUCTION ACTIVITIES HAVE CEASED, BUT IN NO CASE SHALL THE TIME BE GREATER THAN FOURTEEN (14) CALENDAR DAYS.

C. TOTAL PROJECT AREA: 60.16± ACRES

THE PROJECT CONSISTS OF THE CONSTRUCTION OF APPROXIMATELY 168 RESIDENTIAL LOTS, ASPHALT PAVEMENT, CURB AND GUTTER, DRIVEWAY CONNECTIONS AND ACCESS ROADS, A CLOSED SANITARY SEWER SYSTEM, WATER MAINS FOR POTABLE WATER, AND FIRE PROTECTION AND A STORMWATER COLLECTION SYSTEM, AND CONVEYANCE PIPES TO THE SURFACE WATER MANAGEMENT SYSTEM LOCATED ONSITE.

D. TOTAL AREA TO BE DISTURBED: 60.16± ACRES

IT SHALL BE THE INTENT OF THE CONTRACTOR TO MINIMIZE THE ACREAGES OF DISTURBED SOIL IN THE PROJECT AREA AT ALL TIMES.

E. (1) RUNOFF COEFFICIENTS BEFORE CW(B), DURING CW(D) AND AFTER CW(A) CONSTRUCTION:

RUNOFF COEFFICIENT FOR:
OPEN SPACE: C = 0.20
IMPERVIOUS SURFACES: C = 0.95
DISTURBED AREAS, EXPOSED SOIL ETC. DURING CONST.: C = 0.40

WEIGHTED RUNOFF COEFFICIENT:
CW(B): 0.20
CW(D): 0.40
CW(A): 0.60

THE SITE CONSISTS OF NATURAL TREED AREAS AND SOD FARM AREAS.

2. CONTROLS
NARRATIVE – SEQUENCE OF SOIL DISTURBING ACTIVITIES AND IMPLEMENTATION OF CONTROLS:

CONSTRUCTION ACTIVITIES – GENERAL

CONSTRUCTION ACTIVITIES ON THIS PROJECT CONSIST OF CLEARING, GRUBBING, EARTHWORK, INSTALLATION OF THE INFRASTRUCTURE, BACK FILLING AND GRADING. ALL ITEMS REPRESENTED IN THE FOLLOWING DISCUSSION ARE TREATED IN DETAIL IN THE CONSTRUCTION DRAWINGS AND PROJECT SPECIFICATIONS, "FLORIDA DEPARTMENT OF TRANSPORTATION STANDARD SPECIFICATIONS FOR ROAD AND BRIDGE CONSTRUCTION", OR WILL BE IMPLEMENTED BY THE CONTRACTOR'S REPRESENTATIVE IN A MANNER APPROPRIATE TO ENVIRONMENTALLY SENSITIVE CONSTRUCTION PRACTICES AND AS APPROVED BY THE OWNER.

THE CONTRACTOR WILL BE REQUIRED TO PREPARE A SITE SPECIFIC EROSION CONTROL PLAN. THE CONTRACTOR WILL ALSO BE REQUIRED TO MODIFY THE PLAN OR MATERIALS DURING CONSTRUCTION TO ADAPT TO SEASONAL VARIATIONS.

OFF-SITE RUNOFF SHOULD BE DIVERTED AWAY OR THROUGH THE CONSTRUCTION AREA. THIS ADDITIONAL FLOW IF NOT DIVERTED, CAN ADD VOLUME AND SIZE TO STRUCTURAL PRACTICES, REQUIRING MORE FREQUENT MAINTENANCE AND LIMITING EFFECTIVENESS OF EROSION AND SEDIMENT CONTROLS.

COMPLIANCE WITH THE STORMWATER POLLUTION PREVENTION PLAN IS A REQUIREMENT OF THE PROJECT CONTRACT DOCUMENTS. CONSTRUCTION-RELATED INFORMATION REQUIRED BY THE NPDES PERMIT BUT NOT SPECIFICALLY INDICATED IN THE STORMWATER POLLUTION PREVENTION PLAN CAN BE FOUND IN THE CONTRACT DOCUMENTS.

THE CONTRACTOR WILL BE RESPONSIBLE FOR PROVIDING A STABILIZED CONSTRUCTION ENTRANCE FOR VEHICLES ENTERING OR EXITING ONTO PUBLIC ROADS. THE CONTRACTOR'S REPRESENTATIVE SHALL BE RESPONSIBLE FOR MONITORING THE SYSTEM AND MODIFYING THE SYSTEM OR PROCEDURES AS NEEDED.

CONSTRUCTION ACTIVITIES

PRIOR TO COMMENCEMENT, THE CONTRACTOR SHALL PROVIDE A DETAILED CONSTRUCTION SCHEDULE TO INDICATE DATES OF MAJOR GRADING ACTIVITIES AND DETERMINE SEQUENCING OF TEMPORARY AND PERMANENT SOIL DISTURBING ACTIVITIES ON ALL PORTIONS OF THE SITE.

PRIOR TO THE BEGINNING OF ANY PHASE, THE CONTRACTOR SHALL INSTALL EROSION AND SEDIMENT CONTROL ITEMS AS DESCRIBED IN THE CONSTRUCTION DRAWINGS.

THE CONTRACTOR IS RESPONSIBLE FOR PROVIDING SEEDING, MULCHING AND WATER AS SOON AS POSSIBLE FOR AREAS OF THE SITE WHERE CONSTRUCTION HAS TEMPORARILY CEASED BUT IN NO CASE SHALL THE TIME BE GREATER THAN FOURTEEN (14) DAYS.

INSTALLATION OF THE INFRASTRUCTURE AND EARTHWORK, AS SHOWN ON THE PLANS MAY REQUIRE DEWATERING PRIOR TO CONSTRUCTION. THE CONTRACTOR SHALL BE RESPONSIBLE FOR DISCHARGING THE DEWATERING FLOW TO A TEMPORARY SETTLINGS BASIN SUCH AS AREAS CREATED BY STAKED HAY BALES IN DRY GRASSED SWALES OR OTHER SIMILAR SETTLING AREAS, HOWEVER, AT NO TIME SHALL THE CONTRACTOR DISCHARGE DEWATERING FLOW DIRECTLY TO WETLAND AREAS.

EROSION AND SEDIMENT CONTROLS SHALL BE MAINTAINED THROUGHOUT CONSTRUCTION AND MAY BE REMOVED ONLY WHEN PERMANENT STABILIZATION IS ESTABLISHED AND THE OWNER APPROVES THE REMOVAL.

A. EROSION AND SEDIMENT CONTROLS:

(1) STABILIZATION PRACTICES TO BE IMPLEMENTED:

STABILIZATION MEASURES SHALL BE INITIATED AS SOON AS PRACTICABLE IN PORTIONS OF THE SITE WHERE CONSTRUCTION ACTIVITIES HAVE TEMPORARILY OR PERMANENTLY CEASED, BUT IN NO CASE SHALL THE TIME BE GREATER THAN FOURTEEN (14) DAYS AFTER THE CONSTRUCTION ACTIVITY HAS TEMPORARILY OR PERMANENTLY CEASED. ALL DISTURBED AREAS WILL BE SEEDED AND MULCHED OR SODDED FOLLOWING CONSTRUCTION.

(2) STRUCTURAL PRACTICES WILL INCLUDE:

ROCK BEDDING AT CONSTRUCTION EXIT
STAKED SILT FENCES

B. OTHER CONTROLS:

(1) WASTE DISPOSAL:

THE CONTRACTOR WILL PROVIDE LITTER CONTROL AND COLLECTION WITHIN THE PROJECT BOUNDARIES DURING CONSTRUCTION ACTIVITIES. ALL FERTILIZER, HYDROCARBON, OR OTHER CHEMICAL CONTAINERS SHALL BE DISPOSED OF BY THE CONTRACTOR ACCORDING TO EPA'S STANDARD PRACTICES AS DETAILED BY THE MANUFACTURER. NO SOLID MATERIALS INCLUDING BUILDING AND CONSTRUCTION MATERIALS SHALL BE DISCHARGED TO WETLANDS OR BURIED ON-SITE.

(2) OFF-SITE VEHICLE TRACKING:

OFF-SITE VEHICLE TRACKING WILL BE CONTROLLED BY THE FOLLOWING METHODS:

LOADED HAUL TRUCKS TO BE COVERED WITH TARPAULIN.
EXCESS DIRT ON ROAD REMOVED DAILY.
STABILIZED CONSTRUCTION ENTRANCE.

THE CONTRACTOR SHALL BE RESPONSIBLE FOR CONSTRUCTING AND MAINTAINING STABILIZED CONSTRUCTION ENTRANCES WHEN ENTERING OR EXITING ONTO PUBLIC ROAD. THE CONTRACTOR'S REPRESENTATIVE SHALL BE RESPONSIBLE FOR MODIFYING THE SYSTEM OR PROCEDURES AS NEEDED AND AS APPROVED BY THE OWNER.

(3) SANITARY WASTE:

ALL SANITARY WASTE WILL BE COLLECTED FROM PORTABLE UNITS BY A LICENSED SANITARY WASTE MANAGEMENT CONTRACTOR AS REQUIRED BY STATE REGULATION.

(4) FERTILIZERS AND PESTICIDES:

FERTILIZERS AND SOIL STERILIZERS WILL BE USED ON THIS PROJECT IN ACCORDANCE WITH THE PROJECT SPECIFICATIONS AT THE DISCRETION OF THE CONTRACTOR WITH COORDINATION OF THE OWNER.

(5) NON-STORMWATER DISCHARGE (INCLUDING SPILL REPORTING):

A. THE CONTRACTOR WILL PROVIDE THE DEVELOPER / APPLICANT WITH AN EROSION CONTROL PLAN THAT WILL INCLUDE SPILL REPORTING AND RESPONSE.

B. APPROVED STATE, LOCAL PLANS, OR STORMWATER PERMITS:
SEE ATTACHED PERMITS.

(6) STORAGE, APPLICATION, GENERATION, AND MITIGATION OF TOXIC SUBSTANCES:

(A) ALL TOXIC SUBSTANCES ARE TO BE STORED, APPLIED, GENERATED, OR MITIGATED IN ACCORDANCE WITH THE CRITERIA OF THE APPROPRIATE REGULATORY AGENCIES.

3. MAINTENANCE:

GENERAL

THE CONTRACTOR WILL BE RESPONSIBLE FOR MAINTENANCE AND REPAIRS OF EROSION AND SEDIMENT CONTROL DEVICES AND REMOVAL OF EROSION AND SEDIMENT CONTROL DEVICES AFTER THE NOTICE OF TERMINATION.

MAINTENANCE AND REPAIR REQUIRED FOR THE CONTROL AND ABATEMENT OF EROSION AND WATER POLLUTION SHALL BE INCLUDED IN THE COST OF PAY ITEMS FOR THIS PROJECT.

THE CONTRACTOR SHALL MAINTAIN RAIN GAUGES ON THE PROJECT SITE AND RECORD WEEKLY RAINFALL. ALL CONTROL MEASURES WILL BE MAINTAINED DAILY BY THE CONTRACTOR.

ALL MEASURES WILL BE MAINTAINED IN GOOD WORKING ORDER. IF A REPAIR IS NECESSARY, IT WILL BE INITIATED WITHIN 24 HOURS OF REPORT.

STRUCTURAL PRACTICES AND CONTROLS:

THE FOLLOWING PRACTICES WILL BE USED TO MAINTAIN EROSION AND SEDIMENT CONTROLS:

BUILT-UP SEDIMENT WILL BE REMOVED FROM SILT FENCE WHEN IT HAS REACHED ONE-THIRD THE HEIGHT OF THE FENCE.

TEMPORARY AND PERMANENT SEEDING AND PLANTING WILL BE INSPECTED FOR BARE SPOTS, WASHOUTS, AND HEALTHY GROWTH.

STABILIZED CONSTRUCTION ENTRANCES SHALL BE MAINTAINED TO PREVENT CLOGGING OF ROCK BEDDING WHICH MAY IMPEDE THE USEFULNESS OF THE STRUCTURE.

4. INSPECTION:

THE CONTRACTOR'S DAILY INSPECTIONS REQUIRED FOR THE CONTROL AND ABATEMENT OF EROSION AND WATER POLLUTION SHALL BE INCLUDED IN THE COST OF THE PAY ITEMS FOR THIS PROJECT.

ALL EROSION AND WATER POLLUTION ABATEMENT AND CONTROL MEASURES WILL BE INSPECTED DAILY BY THE CONTRACTOR.

THE CONTRACTOR SHALL USE THE CONSTRUCTION INSPECTION REPORT FORM (SEE ATTACHED) FOR DAILY INSPECTIONS.

5. TRACKING AND REPORTING:

REQUIRED INSPECTIONS MUST OCCUR AT LEAST ONCE PER WEEK AND WITHIN 24 HOURS OF THE END OF A STORM EVENT THAT IS 0.50 INCHES OR GREATER. AN INSPECTION REPORTING FORM HAS BEEN PROVIDED TO THE OWNER/DEVELOPER.

THE CONTRACTOR SHALL SUBMIT A WEEKLY REPORT TO THE DEVELOPER / APPLICANT DOCUMENTING THE DAILY INSPECTIONS AND MAINTENANCE OR REPAIRS TO THE EROSION AND SEDIMENT CONTROL DEVICES.

THE DEVELOPER / APPLICANT OR ITS REPRESENTATIVES SHALL MAINTAIN ALL REQUIRED RECORDS SUBMITTED BY THE CONTRACTOR AND COMPLETE ALL SWPPP INSPECTION REPORT FORMS REQUIRED FOR THE NPDES PERMIT.

PREPARATION OF THE CONTRACTOR'S WEEKLY REPORTS OF INSPECTIONS, MAINTENANCE AND REPAIRS, REQUIRED FOR THE CONTROL AND ABATEMENT OF EROSION AND WATER POLLUTION, SHALL BE INCLUDED IN THE COST OF THE PAY ITEMS FOR THIS PROJECT.

PAUL E. SKIDMORE
LICENSE NO. 39631
STATE OF FLORIDA
PROFESSIONAL ENGINEER

JOB NO.	EPN	DATE	DESIGNED	DRAWN	CHECKED	Q.C.
506-100C	213	5-1-2015	RAH	RAH	PES	

NO.	DATE	REVISIONS	APP'D BY

DESIGNED FOR
ASTURIA COMMUNITY DEVELOPMENT DISTRICT
605 PALENCIA CLUB DRIVE, ST. AUGUSTINE, FLORIDA 32095
PHONE: (904) 810-0500 - FAX: (904) 810-0525

PROJECT NAME
Asturia | **PROMENADE PARKWAY**

SHEET NAME
OVERALL DRAINAGE AND STORMWATER POLLUTION PREVENTION PLAN (2)

FLORIDA DESIGN CONSULTANTS, INC.
THINK IT. ACHIEVE IT.
3030 STARKEY BOULEVARD, NEW PORT RICHEY, FLORIDA 34655
PHONE: (800) 532-1047 FAX: (727) 848-3648 WWW.FLDESIGN.COM C.A. NO. 7421

©Copyright 2015 Florida Design Consultants, Inc. Drawings and concepts may not be used or reproduced without written permission.

K:\213\ProjData\ConstDocs\Plans\Promenade Parkway\213_PROMENADE-PSWPPP-2.dwg - May 27, 2015 @ 12:07pm - asyrisko

LEGEND

- = Proposed Water Main, Valve, & Services
- = Existing Water Main & Valve
- FM = Existing Force Main
- FM = Proposed Force Main
- R = Existing Reclaimed Water Main
- R = Proposed Reclaimed Water Main & Services
- S = Proposed Sanitary Sewer & Services
- 50 = Proposed Sanitary Sewer Manhole Number
- = Proposed Fire Hydrant Assembly (See Paving, Grading, And Drainage Plans For Finished Grade Elevation)
- = Existing Fire Hydrant
- Ø = Proposed Blowoff Assembly

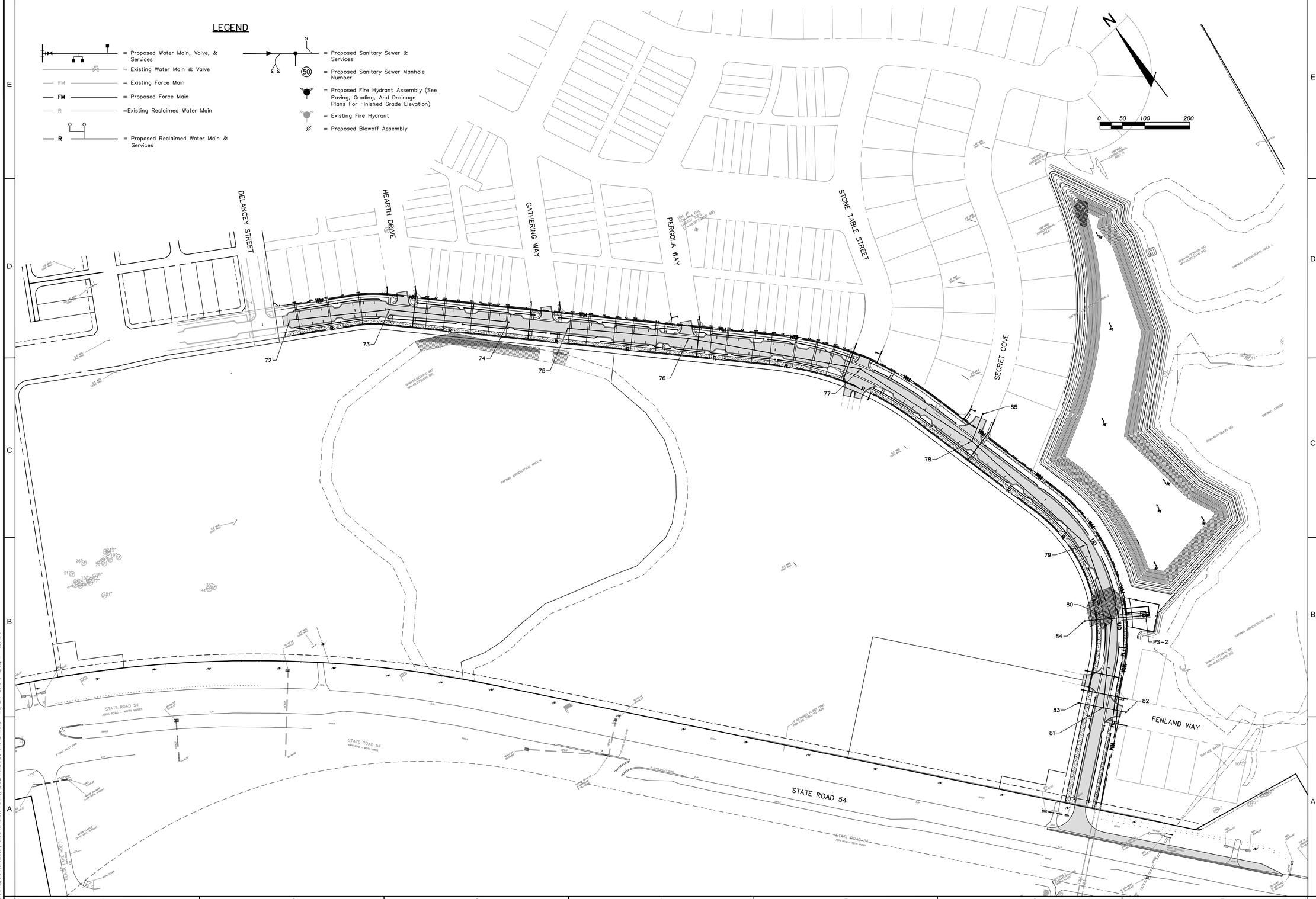

PAUL E. SKIDMORE
LICENSE
NO. 39631
STATE OF FLORIDA
PROFESSIONAL ENGINEER

JOB NO.	506-100C
SHEET	213
DATE	5-1-2015
DESIGNED	RAH
DRAWN	RAH
REVIEWED	PES
CHECKED	

NO.	DATE	REVISIONS	APP'D

DESIGNED FOR
ASTURIA COMMUNITY DEVELOPMENT DISTRICT
665 PALMONA CLUB DRIVE, ST. AUGUSTINE, FLORIDA 32095
PHONE: (904) 824-0500 FAX: (904) 824-0505

PROJECT NAME
Asturia
PROMENADE PARKWAY

SHEET NAME
OVERALL UTILITY PLAN

FLORIDA DESIGN CONSULTANTS, INC.
THINK IT. ACHIEVE IT.
3030 STARKEY BOULEVARD, NEW PORT RICHEY, FLORIDA 34655
PHONE: (800) 532 - 1047 FAX: (727) 848 - 3648 WWW.FLDESIGN.COM C.A. NO. 7421

© Copyright 2015 Florida Design Consultants, Inc. Drawings and concepts may not be used or reproduced without written permission.

K:\213\Proj Data\Const Docs\Plans\Promenade Parkway\213_PROMENADE-CAUTILITY.dwg - May 27, 2015 @ 12:08pm - mynlaks

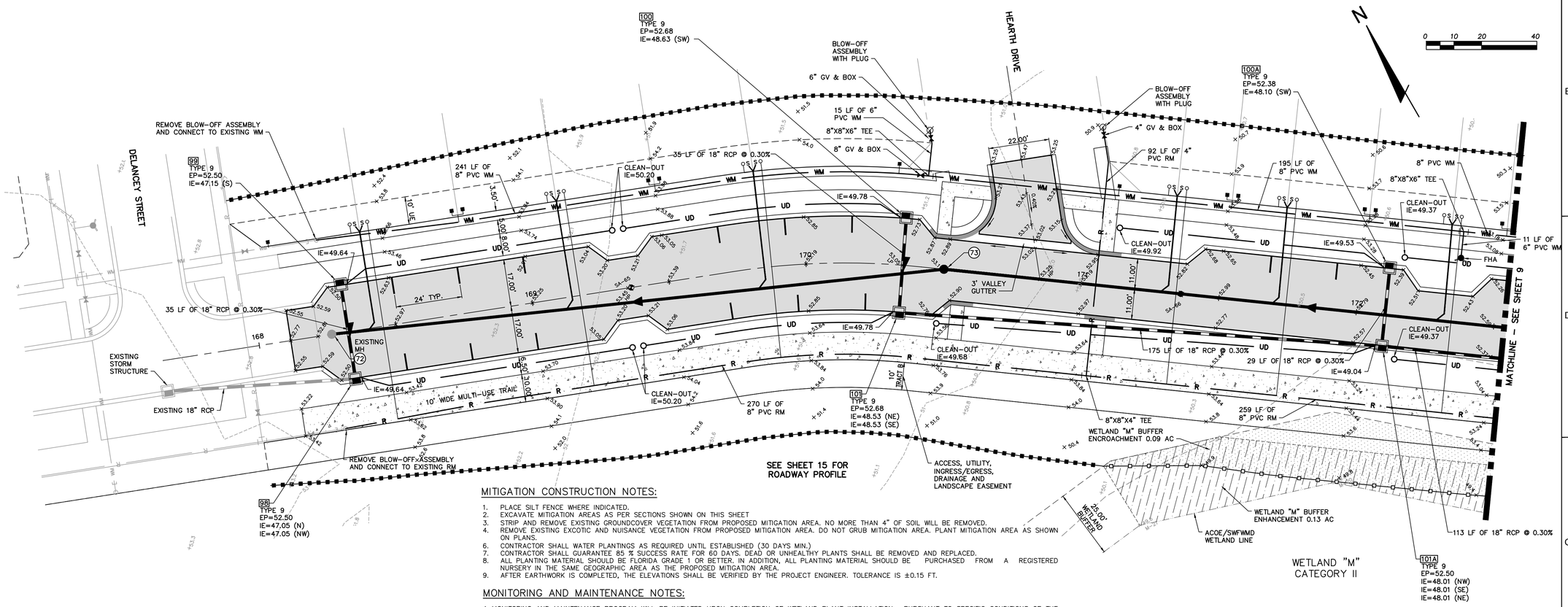

MITIGATION CONSTRUCTION NOTES:

1. PLACE SILT FENCE WHERE INDICATED.
2. EXCAVATE MITIGATION AREAS AS PER SECTIONS SHOWN ON THIS SHEET
3. STRIP AND REMOVE EXISTING GROUNDCOVER VEGETATION FROM PROPOSED MITIGATION AREA. NO MORE THAN 4" OF SOIL WILL BE REMOVED.
4. REMOVE EXISTING EXCOTIC AND NUISANCE VEGETATION FROM PROPOSED MITIGATION AREA. DO NOT GRUB MITIGATION AREA. PLANT MITIGATION AREA AS SHOWN ON PLANS.
6. CONTRACTOR SHALL WATER PLANTINGS AS REQUIRED UNTIL ESTABLISHED (30 DAYS MIN.)
7. CONTRACTOR SHALL GUARANTEE 85 % SUCCESS RATE FOR 60 DAYS. DEAD OR UNHEALTHY PLANTS SHALL BE REMOVED AND REPLACED.
8. ALL PLANTING MATERIAL SHOULD BE FLORIDA GRADE 1 OR BETTER. IN ADDITION, ALL PLANTING MATERIAL SHOULD BE PURCHASED FROM A REGISTERED NURSERY IN THE SAME GEOGRAPHIC AREA AS THE PROPOSED MITIGATION AREA.
9. AFTER EARTHWORK IS COMPLETED, THE ELEVATIONS SHALL BE VERIFIED BY THE PROJECT ENGINEER. TOLERANCE IS ±0.15 FT.

MONITORING AND MAINTENANCE NOTES:

A MONITORING AND MAINTENANCE PROGRAM WILL BE INITIATED UPON COMPLETION OF WETLAND PLANT INSTALLATION. PURSUANT TO SPECIFIC CONDITIONS OF THE APPROVED PERMITS, MONITORING AND MAINTENANCE OF MITIGATION AREA WILL BE CONDUCTED SEMI-ANNUALLY. MONITORING REPORTS WILL BE SUBMITTED TO THE USACE AND SWFWMD WITHIN 30 DAYS OF THE PERFORMANCE OF THE MONITORING EVENT. MONITORING REPORTS WILL PROVIDE PHOTOGRAPHIC DOCUMENTATION OF THE MITIGATION AREA FROM FIXED REFERENCE POINTS AND WILL DISCUSS THE SURVIVAL RATES OF PLANTED VEGETATION AND PROVIDE ESTIMATES OF NUISANCE SPECIES COVERAGES. THE MONITORING REPORTS WILL ALSO INCLUDE A DESCRIPTION OF ALL MAINTENANCE EFFORTS WHICH WILL BE CONDUCTED IN TANDEM WITH EACH MONITORING EVENT.

LEGEND

- = Overland Flow Direction
- = Swale Flow Direction
- = Concentrated Drainage Flow Direction
- 17 = Proposed Storm Structure Number
- +42.1 = Proposed Spot Elevation
- +6.17 = Existing Spot Elevation
- = Proposed Storm Structure & Pipe
- UD = Clean-out & 6" Underdrain
- (DA) = Existing Tree
- = Proposed Silt Fence
- = Proposed Double Silt Fence
- = Floating Turbidity Barrier
- = Wetland/Surface Water Jurisdictional Limit
- = Drop Curb for Sidewalk Connections
- = Limits of Buffer Encroachment
- = Limits of Buffer Enhancement
- = Proposed Water Main, Valve, & Services
- = Existing Water Main & Valve
- FM = Existing Force Main
- FM = Proposed Force Main
- R = Existing Reclaimed Water Main
- R = Proposed Reclaimed Water Main & Services
- S = Proposed Sanitary Sewer & Services
- S S (50) = Proposed Sanitary Sewer Manhole Number
- = Proposed Fire Hydrant Assembly (See Paving, Grading, And Drainage Plans For Finished Grade Elevation)
- = Existing Fire Hydrant
- Ø = Proposed Blowoff Assembly

UPLAND BUFFER ENHANCEMENT

MITIGATION CONSTRUCTION NOTES:

1. PLACE SILT FENCE WHERE INDICATED.
2. REMOVE EXISTING EXOTIC AND NUISANCE VEGETATION FROM PROPOSED ENHANCEMENT AREA.
3. PLANT AREA AS SHOWN ON PLANS.
4. CONTRACTOR SHALL WATER PLANTINGS AS REQUIRED UNTIL ESTABLISHED (30 DAYS MIN.)
5. CONTRACTOR SHALL GUARANTEE 85 % SUCCESS RATE FOR 60 DAYS. DEAD OR UNHEALTHY PLANTS SHALL BE REMOVED AND REPLACED.
6. ALL PLANTING MATERIAL SHOULD BE FLORIDA GRADE 1 OR BETTER. IN ADDITION, ALL PLANTING MATERIAL SHOULD BE PURCHASED FROM A REGISTERED NURSERY IN THE SAME GEOGRAPHIC AREA AS THE PROPOSED MITIGATION AREA.
7. PLANTS WILL BE INSTALLED IN NATURALISTIC CLUSTERS AT THE CONTRACTOR'S DISCRETION.

MONITORING AND MAINTENANCE NOTES:

A MONITORING AND MAINTENANCE PROGRAM WILL BE INITIATED UPON COMPLETION OF WETLAND PLANT INSTALLATION. PURSUANT TO SPECIFIC CONDITIONS OF THE APPROVED PERMITS, MONITORING AND MAINTENANCE OF MITIGATION AREA WILL BE CONDUCTED SEMI-ANNUALLY. MONITORING REPORTS WILL BE SUBMITTED TO THE USACE AND SWFWMD WITHIN 30 DAYS OF THE PERFORMANCE OF THE MONITORING EVENT. MONITORING REPORTS WILL PROVIDE PHOTOGRAPHIC DOCUMENTATION OF THE MITIGATION AREA FROM FIXED REFERENCE POINTS AND WILL DISCUSS THE SURVIVAL RATES OF PLANTED VEGETATION AND PROVIDE ESTIMATES OF NUISANCE SPECIES COVERAGES. THE MONITORING REPORTS WILL ALSO INCLUDE A DESCRIPTION OF ALL MAINTENANCE EFFORTS WHICH WILL BE CONDUCTED IN TANDEM WITH EACH MONITORING EVENT.

UPLAND BUFFER MITIGATION SUCCESS CRITERIA

MITIGATION IS EXPECTED TO OFFSET ADVERSE IMPACTS TO WETLANDS AND OTHER SURFACE WATERS CAUSED BY REGULATED ACTIVITIES AND TO ACHIEVE VIABLE, SUSTAINABLE UPLAND BUFFER FUNCTIONS. UPLAND BUFFER ENHANCEMENT FOR MITIGATION PURPOSES WILL BE CONSIDERED SUCCESSFUL AND WILL BE RELEASED FROM MONITORING AND REPORTING REQUIREMENTS WHEN THE FOLLOWING CRITERIA ARE MET CONTINUOUSLY FOR A PERIOD OF AT LEAST ONE YEAR WITHOUT INTERVENTION IN THE FORM OF IRRIGATION OR THE ADDITION OR REMOVAL OF VEGETATION.

1) THE DOMINANT AND SUBDOMINANT SPECIES OF DESIRABLE UPLAND BUFFER PLANTS COMPRISING EACH VEGETATION ZONE AND STRATUM OF THE MITIGATION AREA SHALL BE AS FOLLOWS:

ZONE	STRATUM	PERCENT COVER	[1]DOMINANT SPECIES	[1]SUBDOMINANT SPECIES
UPLAND BUFFER	CANOPY	30%	DAHOON HOLLY AMERICAN ELM	LAUREL OAK RED MAPLE SLASH PINE
	SUB-CANOPY	30%		
	GROUNDCOVER	70%	BEAUTYBERRY HIGHBUSH BLUEBERRY SAND CORDGRASS MUHLY GRASS	WAX MYRTLE

1) PLANT SPECIES PROVIDING THE SAME FUNCTION AS THOSE LISTED MAY ALSO BE CONSIDERED IN DETERMINING SUCCESS.

THIS CRITERION MUST BE ACHIEVED WITHIN FIVE YEARS OF MITIGATION AREA RESTORATION. THE PERMITTEE SHALL COMPLETE ANY ACTIVITIES NECESSARY TO ENSURE THE SUCCESSFUL ACHIEVEMENT OF THE MITIGATION REQUIREMENTS BY THE DEADLINE SPECIFIED. ANY REQUEST FOR AN EXTENSION OF THE DEADLINE SPECIFIED SHALL BE ACCOMPANIED WITH AN EXPLANATION AND SUBMITTED AS A PERMIT LETTER MODIFICATION TO THE DISTRICT FOR EVALUATION.

2) DENSITY OF SURVIVING PLANT SPECIES IN THE MITIGATION AREA EQUALS OR EXCEEDS THOSE REFERENCED IN THE PROPOSED PERMIT.

3) COVERAGE BY NUISANCE OR EXOTIC SPECIES DOES NOT EXCEED 5 PERCENT.

THE MITIGATION AREA MAY BE RELEASED FROM MONITORING AND REPORTING REQUIREMENTS AND BE DEEMED SUCCESSFUL AT ANY TIME DURING THE MONITORING PERIOD IF THE PERMITTEE DEMONSTRATES THAT THE CONDITIONS WITHIN THE UPLAND BUFFER ENHANCEMENT AREA ARE SUSTAINABLE.

PROPOSED PLANTING SCHEDULE
UPLAND BUFFER ENHANCEMENT

KEY	SCIENTIFIC NAME	COMMON NAME	SIZE	SPACING	QUANITY
IC	Ilex cassine	Dahoon Holly	3 Gal.	10' o.c.	70
LL	Calicarpa americana	Beautyberry	1 Gal.	6' o.c.	96
VC	Vaccinium corymbosum	Highbush Blueberry	1 Gal.	6' o.c.	96
MC	Myrica cerifera	Wax Myrtle	3 Gal.	20' o.c.	17
MG	Muhlenbergia capillaris	Muhly Grass	1 Gal.	3' o.c.	387
SB	Spartina bakeri	Sand Cordgrass	1 Gal.	3' o.c.	387

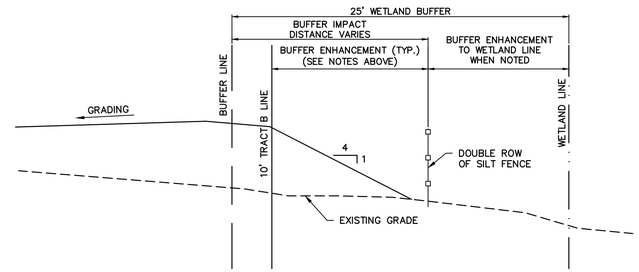

TYPICAL BUFFER ENHANCEMENT SECTION
NTS

PAUL E. SKIDMORE LICENSE NO. 39631 STATE OF FLORIDA PROFESSIONAL ENGINEER

JOB NO.	SCALE	DATE	DESIGNED	DRAWN	CHKD.
506-100C	213	5-1-2015	RAH	RAH	PES

REVISIONS: NO. | DATE | REVISIONS | APP'D

DESIGNED FOR
ASTURIA COMMUNITY DEVELOPMENT DISTRICT
695 PALENCIA CLUB DRIVE, ST. AUGUSTINE, FLORIDA 32095
PHONE: (904) 810-5500 - FAX: (904) 810-5525

PROJECT NAME: PROMENADE PARKWAY

SHEET NAME: **CONSTRUCTIION PLAN (1)**

Asturia

FLORIDA DESIGN CONSULTANTS, INC.
THINK IT. ACHIEVE IT.
3030 STARKEY BOULEVARD, NEW PORT RICHEY, FLORIDA 34655
PHONE: (800) 532 - 1047 FAX: (727) 848 - 3648 WWW.FLDESIGN.COM C.A. NO. 7421

SHEET 8 OF 38

© Copyright 2015 Florida Design Consultants, Inc. Drawings and concepts may not be used or reproduced without written permission.

K:\213\Proj\Data\ConstDocs\Plans\Promenade Parkway\213_PROMENADE-PR01.DWG - May 27, 2015 @ 12:08pm - aryrtsen

SEE SHEET 26 FOR STORM SEWER OUTFALL PLAN

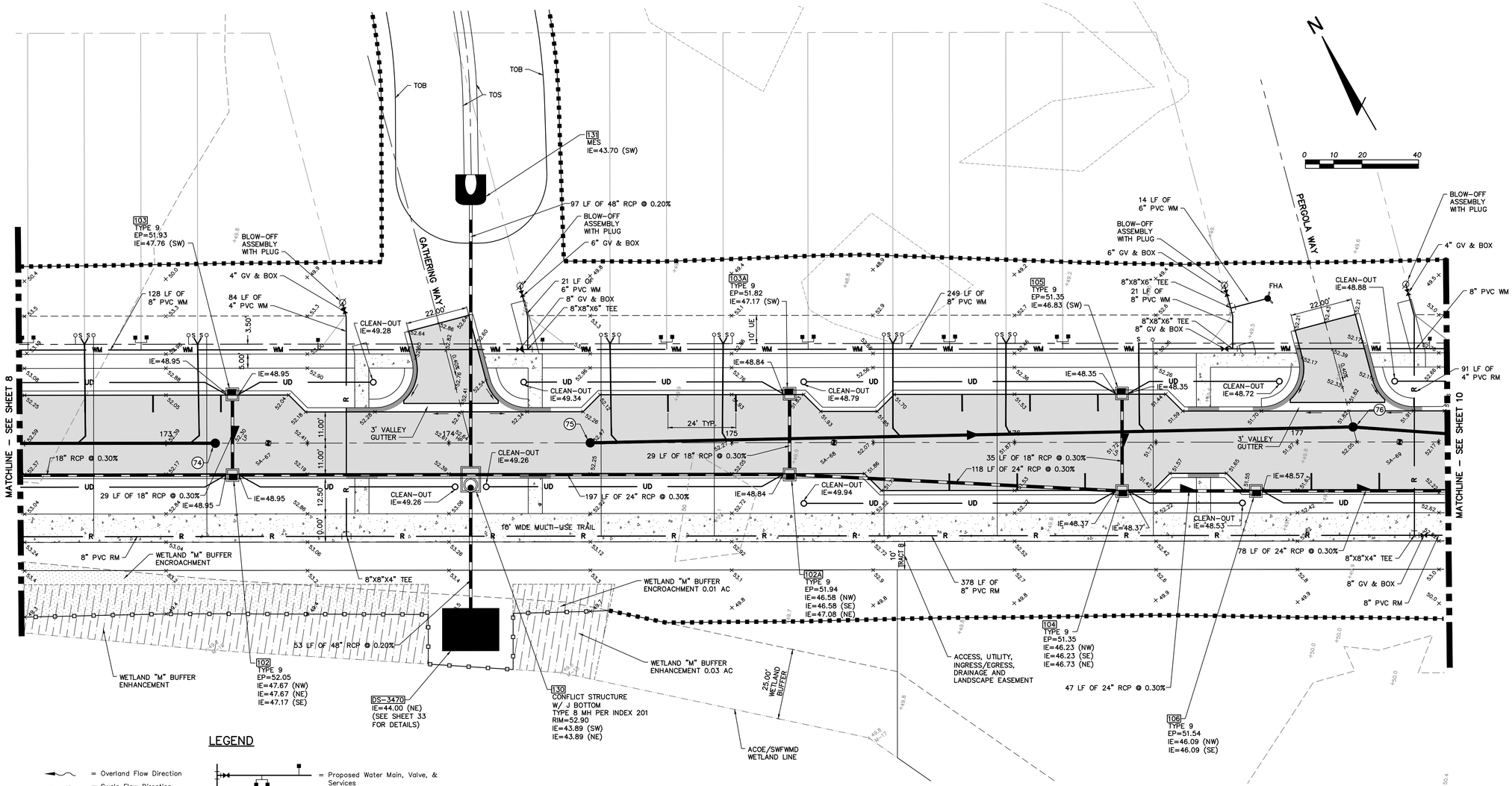

LEGEND

- = Overland Flow Direction
- = Swale Flow Direction
- = Concentrated Drainage Flow Direction
- 17 = Proposed Storm Structure Number
- +42.1 = Proposed Spot Elevation
- + 6.17 = Existing Spot Elevation
- = Proposed Storm Structure & Pipe
- UD = Clean-out & 6" Underdrain
- 04 = Existing Tree
- = Proposed Silt Fence
- = Proposed Double Silt Fence
- = Floating Turbidity Barrier
- = Wetland/Surface Water Jurisdictional Limit
- = Drop Curb for Sidewalk Connections
- = Limits of Buffer Encroachment
- = Limits of Buffer Enhancement
- = Proposed Water Main, Valve, & Services
- = Existing Water Main & Valve
- FM = Existing Force Main
- FM = Proposed Force Main
- R =Existing Reclaimed Water Main
- R = Proposed Reclaimed Water Main & Services
- S = Proposed Sanitary Sewer & Services
- 50 = Proposed Sanitary Sewer Manhole Number
- = Proposed Fire Hydrant Assembly (See Paving, Grading, And Drainage Plans For Finished Grade Elevation)
- = Existing Fire Hydrant
- Ø = Proposed Blowoff Assembly

WETLAND "M"
CATEGORY II

SEE SHEET 16 FOR ROADWAY PROFILE

PAUL E. SKIDMORE LICENSE NO. 39631 STATE OF FLORIDA PROFESSIONAL ENGINEER

JOB NO.	506-100C
SHTS.	213
DATE	5-1-2015
DESIGNED	RAH
DRAWN	RAH
REVIEWED	PES

NO.	DATE	REVISIONS	APP'D

DESIGNED FOR
ASTURIA COMMUNITY DEVELOPMENT DISTRICT
605 PALMICO CLUB DRIVE, ST. AUGUSTINE, FLORIDA 32095
PHONE: (904) 810-0500 FAX: (904) 810-0525

PROJECT NAME: Asturia — **PROMENADE PARKWAY**

SHEET NAME: **CONSTRUCTION PLAN (2)**

FLORIDA DESIGN CONSULTANTS, INC.
THINK IT. ACHIEVE IT.
3030 STARKEY BOULEVARD, NEW PORT RICHEY, FLORIDA 34655
PHONE: (800) 532 - 1047 FAX: (727) 848 - 3648 WWW.FLDESIGN.COM C.A. NO. 7421

SHEET 9 OF 38

© Copyright 2015 Florida Design Consultants, Inc. Drawings and concepts may not be used or reproduced without written permission.

K:\213\ProData\ConstDocs\Plans\Promenade Parkway\213_PROMENADE-PR02.DWG – May 27, 2015 @ 12:08pm – eyrjeko

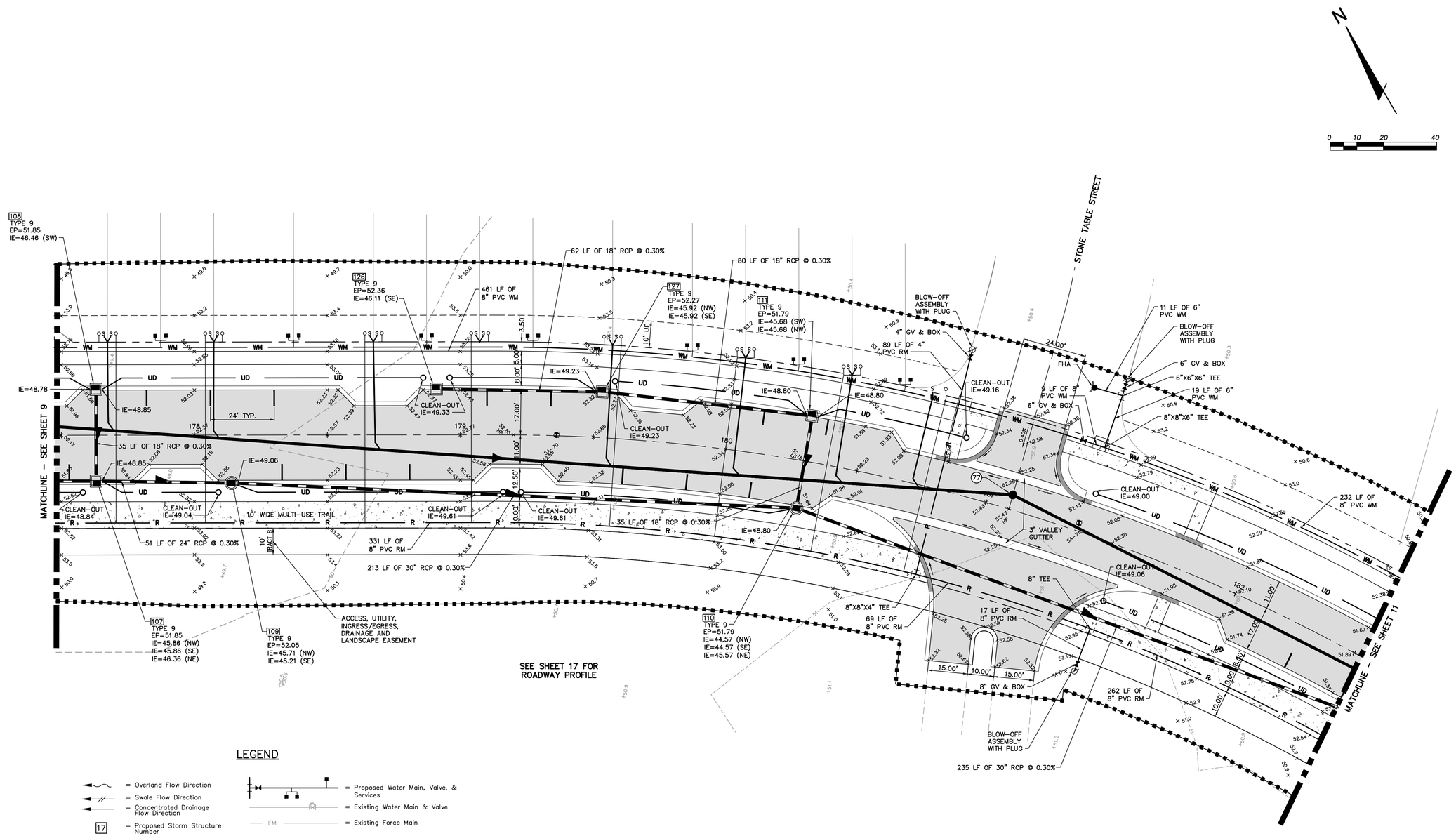

LEGEND

- = Overland Flow Direction
- = Swale Flow Direction
- = Concentrated Drainage Flow Direction
- 17 = Proposed Storm Structure Number
- +42.1 = Proposed Spot Elevation
- +6.17 = Existing Spot Elevation
- = Proposed Storm Structure & Pipe
- UD = Clean-out & 6" Underdrain
- (XX) = Existing Tree
- = Proposed Silt Fence
- = Proposed Double Silt Fence
- = Floating Turbidity Barrier
- = Wetland/Surface Water Jurisdictional Limit
- = Drop Curb for Sidewalk Connections
- = Proposed Water Main, Valve, & Services
- = Existing Water Main & Valve
- FM = Existing Force Main
- FM = Proposed Force Main
- R =Existing Reclaimed Water Main
- R = Proposed Reclaimed Water Main & Services
- S = Proposed Sanitary Sewer & Services
- (50) = Proposed Sanitary Sewer Manhole Number
- = Proposed Fire Hydrant Assembly (See Paving, Grading, And Drainage Plans For Finished Grade Elevation)
- = Existing Fire Hydrant
- Ø = Proposed Blowoff Assembly

PAUL E. SKIDMORE LICENSE NO. 39631 STATE OF FLORIDA PROFESSIONAL ENGINEER

JOB NO.	EPR	DATE	DESIGNED	DRAWN	REVIEWED
506-100C	213	5-1-2015	RAH	RAH	PES

NO.	DATE	REVISIONS	APP'D

DESIGNED FOR
ASTURIA COMMUNITY DEVELOPMENT DISTRICT
605 PALMETTO CLUB DRIVE, ST. AUGUSTINE, FLORIDA 32095
PHONE: (904) 810-0500 FAX: (904) 810-0525

PROJECT NAME: Asturia — **PROMENADE PARKWAY**

SHEET NAME: **CONSTRUCTION PLAN (3)**

FLORIDA DESIGN CONSULTANTS, INC.
THINK IT. ACHIEVE IT.
3030 STARKEY BOULEVARD, NEW PORT RICHEY, FLORIDA 34655
PHONE: (800) 532 - 1047 FAX: (727) 848 - 3648 WWW.FLDESIGN.COM C.A. NO. 7421

© Copyright 2015 Florida Design Consultants, Inc. Drawings and concepts may not be used or reproduced without written permission.

K:\2013\Projects\Constdocs\Plans\Promenade Parkway\213_PROMENADE-PP013.DWG – May 27, 2015 @ 12:09pm – evyrjake

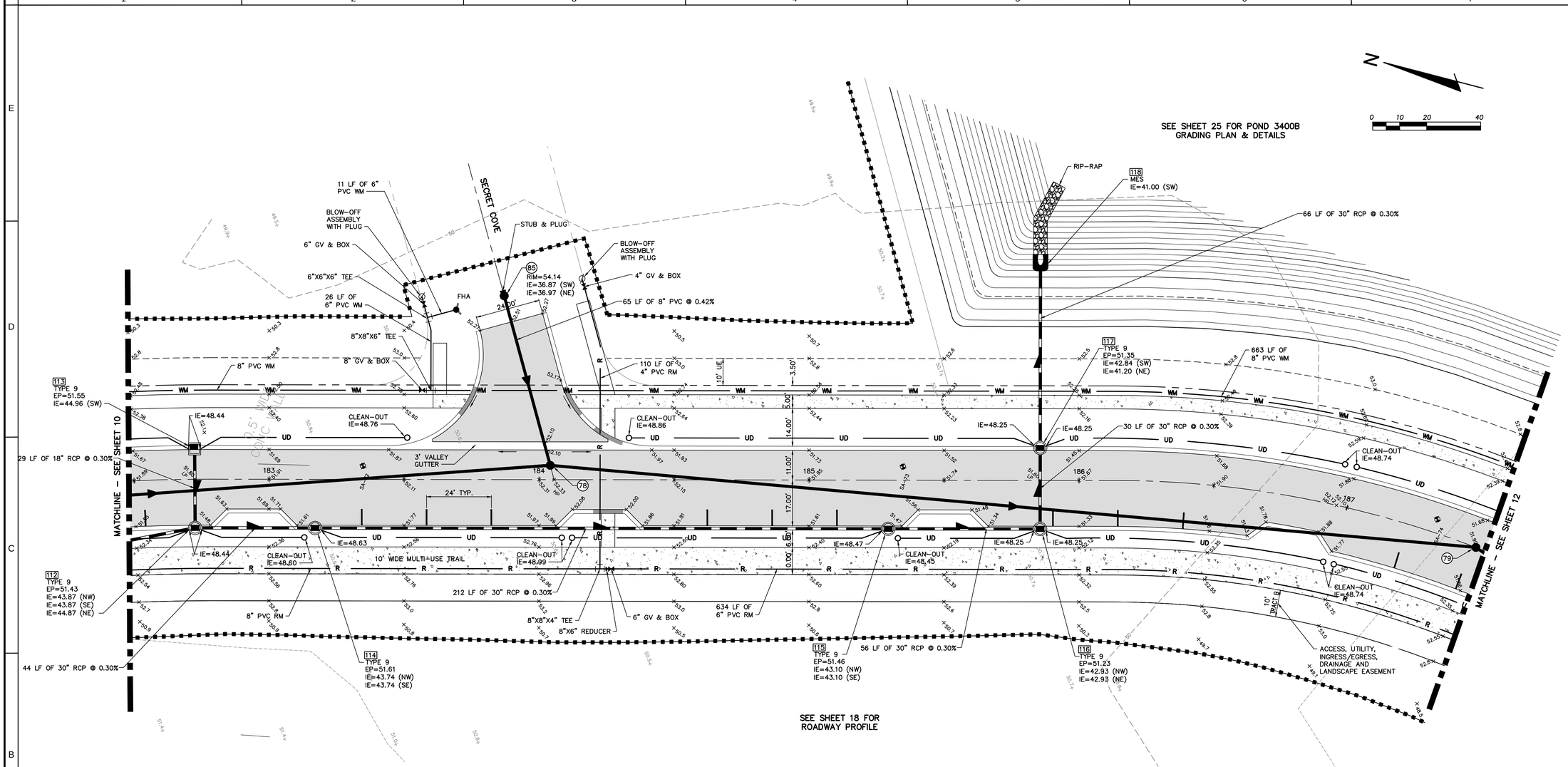

LEGEND

- = Overland Flow Direction
- = Swale Flow Direction
- = Concentrated Drainage Flow Direction
- 17 = Proposed Storm Structure Number
- +42.1 = Proposed Spot Elevation
- +6.17 = Existing Spot Elevation
- = Proposed Storm Structure & Pipe
- UD = Clean-out & 6" Underdrain
- OA = Existing Tree
- = Proposed Silt Fence
- = Proposed Double Silt Fence
- = Floating Turbidity Barrier
- = Wetland/Surface Water Jurisdictional Limit
- = Drop Curb for Sidewalk Connections
- = Limits of Buffer Encroachment
- = Proposed Water Main, Valve, & Services
- = Existing Water Main & Valve
- FM = Existing Force Main
- FM = Proposed Force Main
- R =Existing Reclaimed Water Main
- R = Proposed Reclaimed Water Main & Services
- S = Proposed Sanitary Sewer & Services
- 50 = Proposed Sanitary Sewer Manhole Number
- = Proposed Fire Hydrant Assembly (See Paving, Grading, And Drainage Plans For Finished Grade Elevation)
- = Existing Fire Hydrant
- Ø = Proposed Blowoff Assembly

PAUL E. SKIDMORE LICENSE NO. 39631 STATE OF FLORIDA PROFESSIONAL ENGINEER

JOB NO.	SCALE	DATE	DRAWN	DESIGNED	QC
506-100C	213	5-1-2015	RAH	RAH	PES

REVISIONS	DATE	NO.

DESIGNED FOR:
ASTURIA COMMUNITY DEVELOPMENT DISTRICT
605 PALMONA CLUB DRIVE, ST. AUGUSTINE, FLORIDA 32095
PHONE: (904) 810-0500 - FAX: (904) 810-0525

PROJECT NAME: Asturia | PROMENADE PARKWAY

SHEET NAME: **CONSTRUCTION PLAN (4)**

FLORIDA DESIGN CONSULTANTS, INC.
THINK IT. ACHIEVE IT.
3030 STARKEY BOULEVARD, NEW PORT RICHEY, FLORIDA 34655
PHONE: (800) 532 - 1047 FAX: (727) 848 - 3648 WWW.FLDESIGN.COM C.A. NO. 7421

©Copyright 2015 Florida Design Consultants, Inc. Drawings and concepts may not be used or reproduced without written permission.

K:\213\ProData\ConstDock\Plans\Promenade Parkway\213_PROMENADE-RPD04.DWG - May 27, 2015 @ 12:09pm - ayrlee

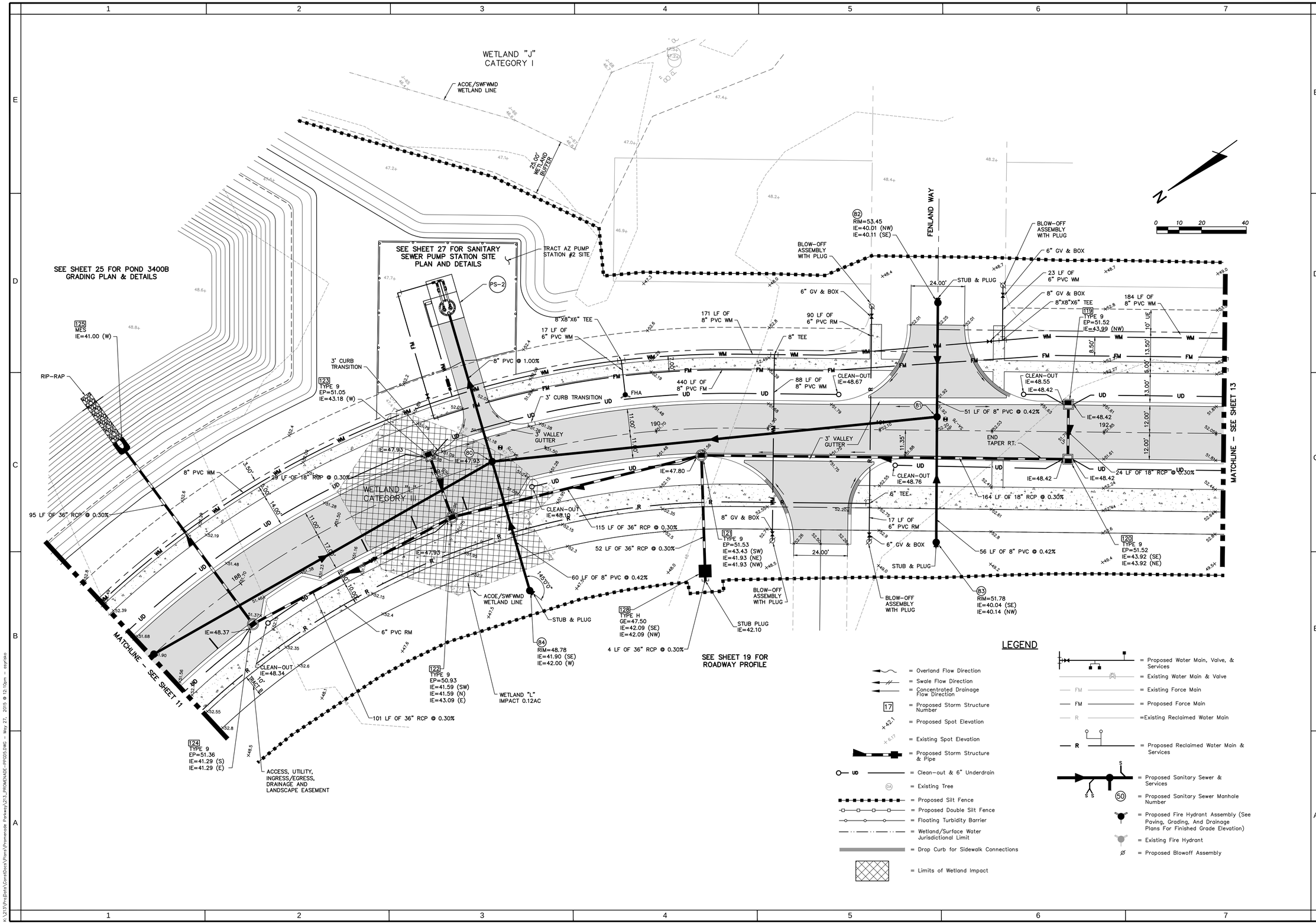

PAUL E. SKIDMORE LICENSE NO. 39631 STATE OF FLORIDA PROFESSIONAL ENGINEER

JOB NO.	506-100C
SHTS	213
DATE	5-1-2015
DR/CHKD	RAH / RAH
DESIGNED	PES

REVISIONS | NO. | DATE | BY | APP

DESIGNED FOR
ASTURIA COMMUNITY DEVELOPMENT DISTRICT
605 PALMOCH CLUB DRIVE, ST. AUGUSTINE, FLORIDA 32095
PHONE: (904) 819-5600 FAX: (904) 819-0525

PROJECT NAME: Asturia | PROMENADE PARKWAY

SHEET NAME: **CONSTRUCTION PLAN (5)**

FLORIDA DESIGN CONSULTANTS, INC.
THINK IT. ACHIEVE IT.
3030 STARKEY BOULEVARD, NEW PORT RICHEY, FLORIDA 34655
PHONE: (800) 532 - 1047 FAX: (727) 848 - 3648 WWW.FLDESIGN.COM C.A. NO. 7421

SHEET 12 OF 38

© Copyright 2015 Florida Design Consultants, Inc. Drawings and concepts may not be used or reproduced without written permission.

K:\213\Proj\Data\ConstDocs\Plans\Promenade Parkway\213_PROMENADE-PP005.DWG - May 27, 2015 @ 12:10pm - eyrlaio

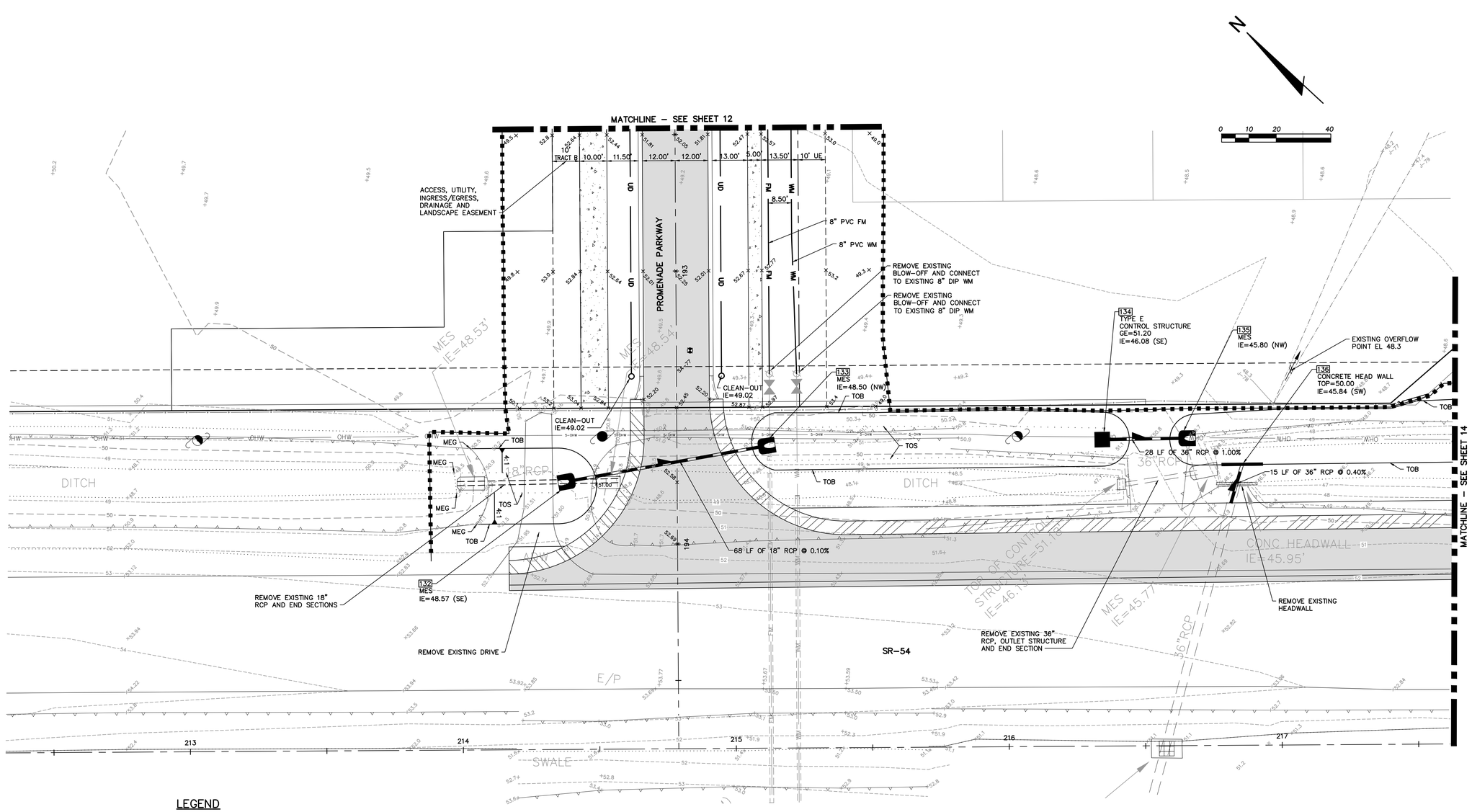

LEGEND

- = Overland Flow Direction
- = Swale Flow Direction
- = Concentrated Drainage Flow Direction
- 17 = Proposed Storm Structure Number
- +42.1 = Proposed Spot Elevation
- +6.17 = Existing Spot Elevation
- = Proposed Storm Structure & Pipe
- UD = Clean-out & 6" Underdrain
- 0A = Existing Tree
- = Proposed Silt Fence
- = Proposed Double Silt Fence
- = Floating Turbidity Barrier
- = Wetland/Surface Water Jurisdictional Limit
- = Drop Curb for Sidewalk Connections
- = Proposed Water Main, Valve, & Services
- MJ = Existing Water Main & Valve
- FM = Existing Force Main
- FM = Proposed Force Main
- R = Existing Reclaimed Water Main
- R = Proposed Reclaimed Water Main & Services
- S = Proposed Sanitary Sewer & Services
- 50 = Proposed Sanitary Sewer Manhole Number
- = Proposed Fire Hydrant Assembly (See Paving, Grading, And Drainage Plans For Finished Grade Elevation)
- = Existing Fire Hydrant
- Ø = Proposed Blowoff Assembly

SEE SHEET 20 FOR ROADWAY PROFILE

SEE SHEETS 21 – 24 FOR TURN LANE CROSS SECTIONS

PAUL E. SKIDMORE LICENSE NO. 39631 STATE OF FLORIDA PROFESSIONAL ENGINEER

JOB NO.	EPR	DATE	DESIGNED	DRAWN	CHECKED
506-100C	213	5-1-2015	RAH	RAH	PES

NO.	DATE	REVISIONS	APP'D

DESIGNED FOR
ASTURIA COMMUNITY DEVELOPMENT DISTRICT
605 PALMORA CLUB DRIVE, S.T. AUGUSTINE, FLORIDA 32095
PHONE: (904) 810-0500 FAX: (904) 810-0525

PROJECT NAME: Asturia | **PROMENADE PARWAY**

SHEET NAME: **CONSTRUCTION PLAN (6)**

FLORIDA DESIGN CONSULTANTS, INC.
THINK IT. ACHIEVE IT.
3030 STARKEY BOULEVARD, NEW PORT RICHEY, FLORIDA 34655
PHONE: (800) 532 - 1047 FAX: (727) 848 - 3648 WWW.FLDESIGN.COM C.A. NO. 7421

©Copyright 2015 Florida Design Consultants, Inc. Drawings and concepts may not be used or reproduced without written permission.

K:\213\ProData\ConstDocs\Plans\Promenade Parkway\213_PROMENADE-RPD06.DWG – May 27, 2015 @ 12:10pm – eprylow

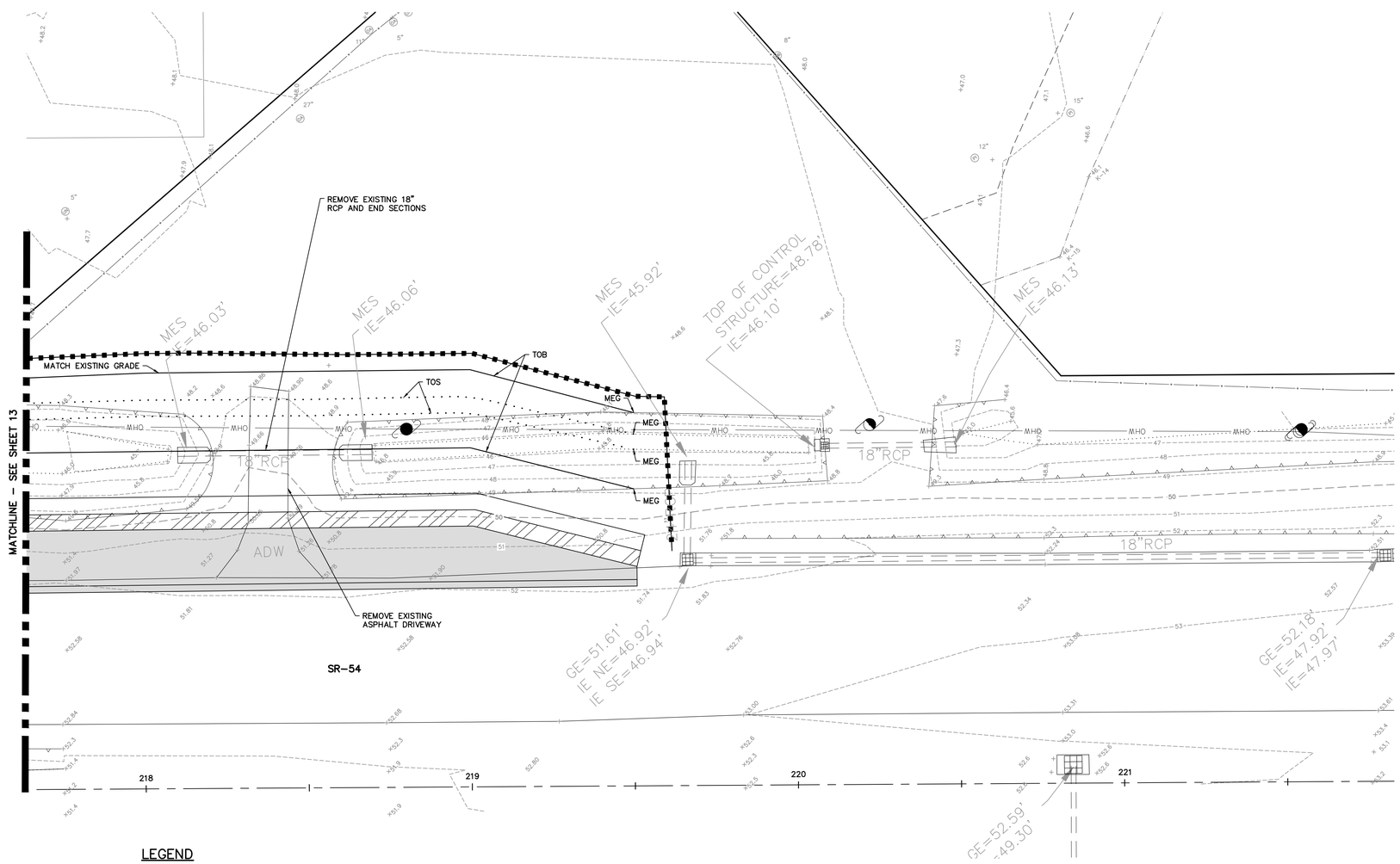

LEGEND

- = Overland Flow Direction
- = Swale Flow Direction
- = Concentrated Drainage Flow Direction
- 17 = Proposed Storm Structure Number
- +42.1 = Proposed Spot Elevation
- + 6.17 = Existing Spot Elevation
- = Proposed Storm Structure & Pipe
- UD = Clean-out & 6" Underdrain
- (OA) = Existing Tree
- = Proposed Silt Fence
- = Proposed Double Silt Fence
- = Floating Turbidity Barrier
- = Wetland/Surface Water Jurisdictional Limit
- = Drop Curb for Sidewalk Connections
- = Proposed Water Main, Valve, & Services
- = Existing Water Main & Valve
- FM = Existing Force Main
- FM = Proposed Force Main
- R = Existing Reclaimed Water Main
- R = Proposed Reclaimed Water Main & Services
- S = Proposed Sanitary Sewer & Services
- S S = Proposed Sanitary Sewer Manhole Number
- = Proposed Fire Hydrant Assembly (See Paving, Grading, And Drainage Plans For Finished Grade Elevation)
- = Existing Fire Hydrant
- Ø = Proposed Blowoff Assembly

SEE SHEETS 21 – 24 FOR TURN LANE CROSS SECTIONS

N

0 10 20 40

PAUL E. SKIDMORE LICENSE NO. 39631 STATE OF FLORIDA PROFESSIONAL ENGINEER

JOB NO.	SCALE	DATE	DESIGNED	DRAWN	CHECKED	QC
506-100C	213	5-1-2015	RAH	RAH	PES	

NO.	DATE	REVISIONS	BY	APP'D

DESIGNED FOR
ASTURIA COMMUNITY DEVELOPMENT DISTRICT
605 PALMICHI CLUB DRIVE, ST. AUGUSTINE, FLORIDA 32095
PHONE: (904) 810-0500 - FAX: (904) 810-0525

PROJECT NAME: Asturia — **PROMENADE PARKWAY**

SHEET NAME: **CONSTRUCTION PLAN (7)**

FLORIDA DESIGN CONSULTANTS, INC.
THINK IT. ACHIEVE IT.
3030 STARKEY BOULEVARD, NEW PORT RICHEY, FLORIDA 34655
PHONE: (800) 532 - 1047 FAX: (727) 848 - 3648 WWW.FLDESIGN.COM C.A. NO. 7421

© Copyright 2015 Florida Design Consultants, Inc. Drawings and concepts may not be used or reproduced without written permission.

K:\213\Projects\CostDocs\Plans\Promenade Parkway\213_PROMENADE_PROT.DWG – May 27, 2015 @ 12:11pm – eyrjako

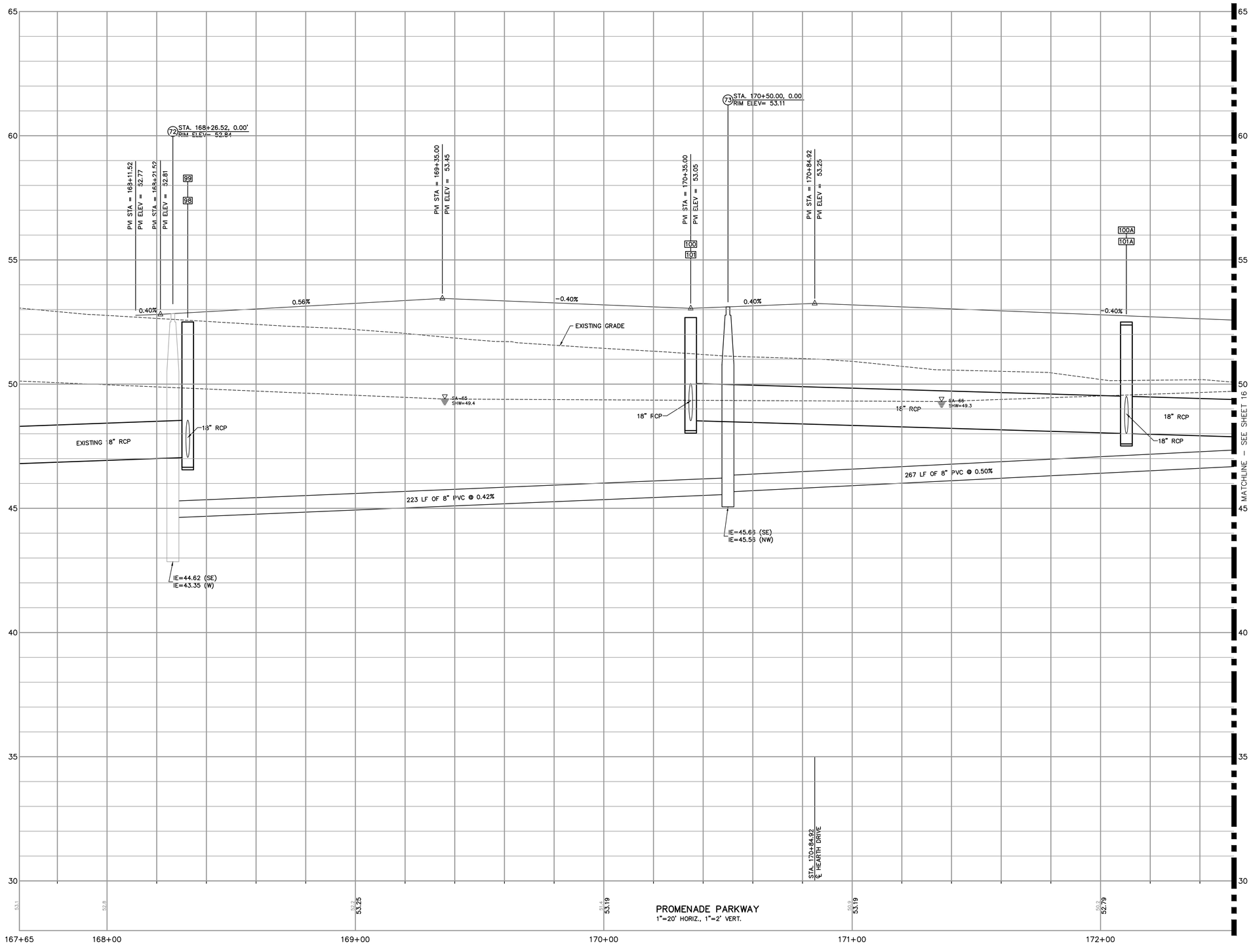

PAUL E. SKIDMORE
LICENSE
NO. 39631
STATE OF FLORIDA
PROFESSIONAL ENGINEER

JOB NO.	DFN	DATE	DESIGNED	DRAWN	CHECKED	QC
506-100C	213	5-1-2015	RAH	RAH	PES	

NO.	DATE	REVISIONS	BY	APP'D

DESIGNED FOR
ASTURIA COMMUNITY DEVELOPMENT DISTRICT

609 PALENCIA CLUB DRIVE, ST. AUGUSTINE, FLORIDA 32095
PHONE: (904) 810-5500 FAX: (904) 810-0525

PROJECT NAME: Asturia

SHEET NAME: **PROMENADE PARKWAY**

ROADWAY PROFILE (1)

FLORIDA DESIGN CONSULTANTS, INC.
THINK IT. ACHIEVE IT.
2023 ON S. TERRAMBROK, BLDG 51 SUITE B/W UPDORF, RTO MIEPA, FLORIDA 34655
PHONE: (800) 532 - 1047 FAX: (727) 848 - 3648 WWW.FLDESIGN.COM C.A. NO. 7421

© Copyright 2015 Florida Design Consultants, Inc. Drawings and concepts may not be used or reproduced without written permission.

K:\213\Proj\Dwls\CivilDocs\Plans\Promenade Parkway\213_PROMENADE-PPROF.DWG - May 27, 2015 @ 12:11pm - dayrlee

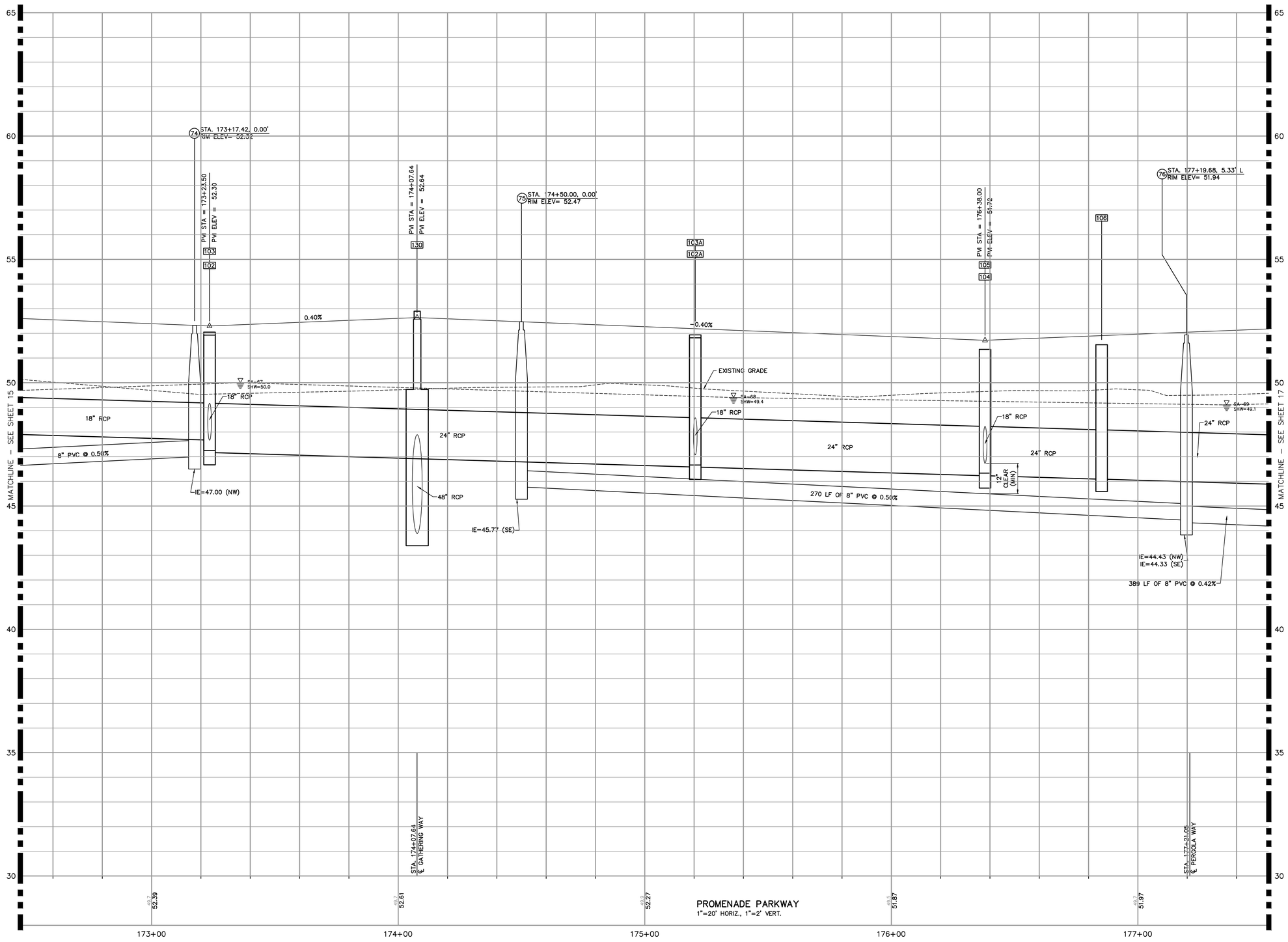

PAUL E. SKIDMORE
LICENSE
NO. 39631
STATE OF FLORIDA
PROFESSIONAL ENGINEER

JOB NO.	DFN.	DATE	DESIGNED	DRAWN	REVIEWED	QC
506-100C	213	5-1-2015	RAH	RAH	PES	

NO.	DATE	REVISIONS	APP'D

DESIGNED FOR
ASTURIA COMMUNITY DEVELOPMENT DISTRICT
605 PALENCIA CLUB DRIVE, ST. AUGUSTINE, FLORIDA 32095
PHONE: (904) 810-0500 - FAX: (904) 810-0525

PROJECT NAME: Asturia — **PROMENADE PARKWAY**

SHEET NAME: **ROADWAY PROFILE (2)**

FLORIDA DESIGN CONSULTANTS, INC.
THINK IT. ACHIEVE IT.
2020 N. FERRIDIX LINOS LEEWARD, BELVEDERE, FLORIDA 34655
PHONE: (800) 532 - 1047 FAX: (727) 848 - 3648 WWW.FLDESIGN.COM C.A. NO. 7421

SHEET 16 OF 38

© Copyright 2015 Florida Design Consultants, Inc. Drawings and concepts may not be used or reproduced without written permission.

K:\213\Proj\Data\ConstDocs\Plans\Promenade Parkway\213_PROMENADE_PROF.DWG – May 27, 2015 @ 12:11pm – stylake

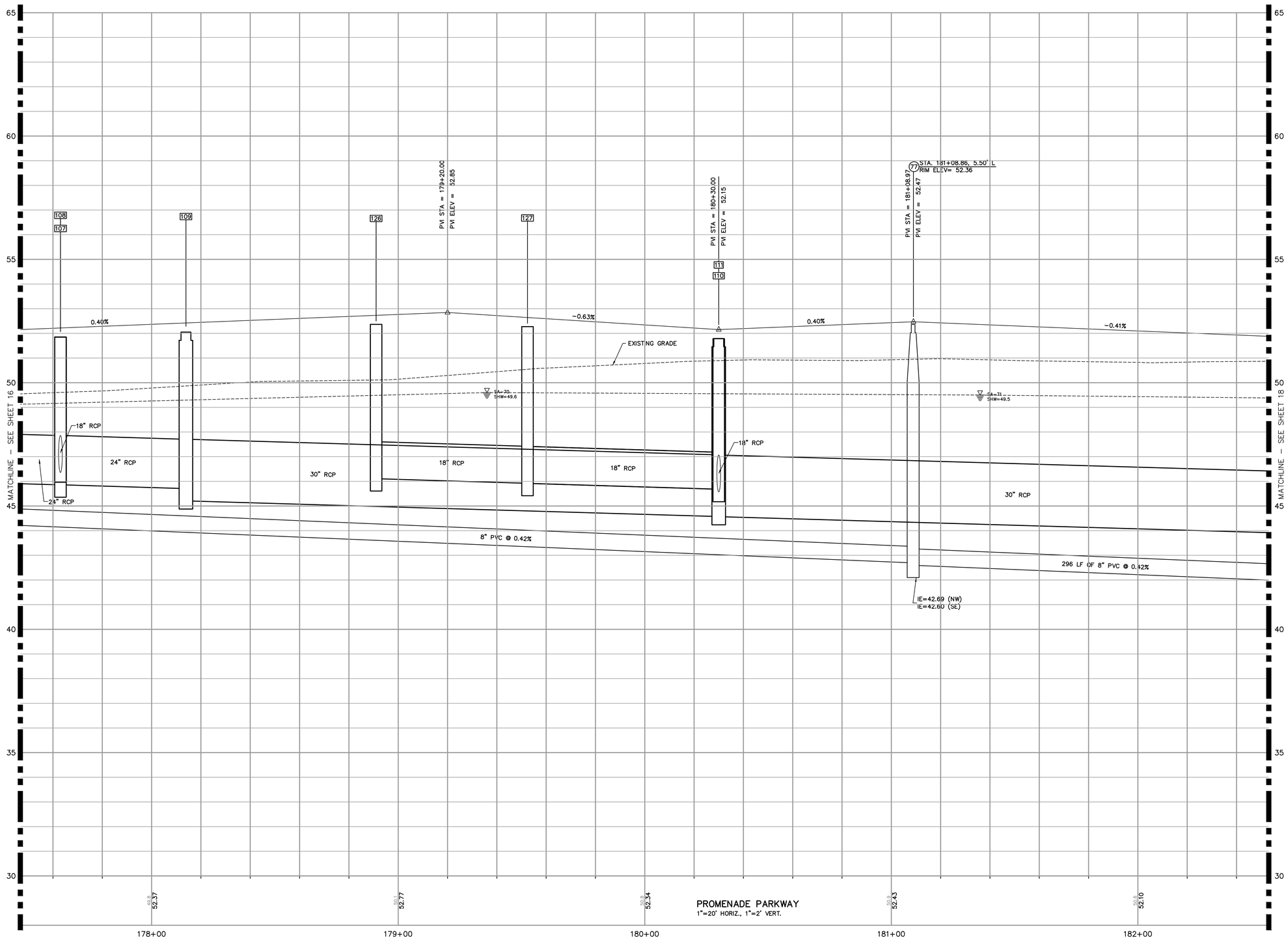

PAUL E. SKIDMORE
LICENSE
NO. 39631
STATE OF FLORIDA
PROFESSIONAL ENGINEER

JOB NO.	SHEET	DATE	DRAWN	DESIGNED	QC
506-100C	213	5-1-2015	RAH	RAH	PES

NO.	DATE	REVISIONS	BY	APP'D

DESIGNED FOR
ASTURIA COMMUNITY DEVELOPMENT DISTRICT
605 PALLOCK CLUB DRIVE, ST. AUGUSTINE, FLORIDA 32095
PHONE: (904) 810-0500 - FAX: (904) 810-0525

PROJECT NAME: Asturia | **PROMENADE PARKWAY**

SHEET NAME: **ROADWAY PROFILE (3)**

FLORIDA DESIGN CONSULTANTS, INC.
THINK IT. ACHIEVE IT.
2020 N. STARKEY BLVD., SUITE 2, ST. PETERSBURG, FLORIDA 33716
PHONE: (800) 532 - 1047 FAX: (727) 848 - 3648 WWW.FLDESIGN.COM
FLORIDA C.A. NO. 7421 34655

SHEET 17 OF 38

© Copyright 2015 Florida Design Consultants, Inc. Drawings and concepts may not be used or reproduced without written permission.

K:\2121Proj\Data\ConstDocs\Plans\Promenade Parkway\213_PROMENADE_PROF.DWG – May 27, 2015 @ 12:11pm – styrlaw

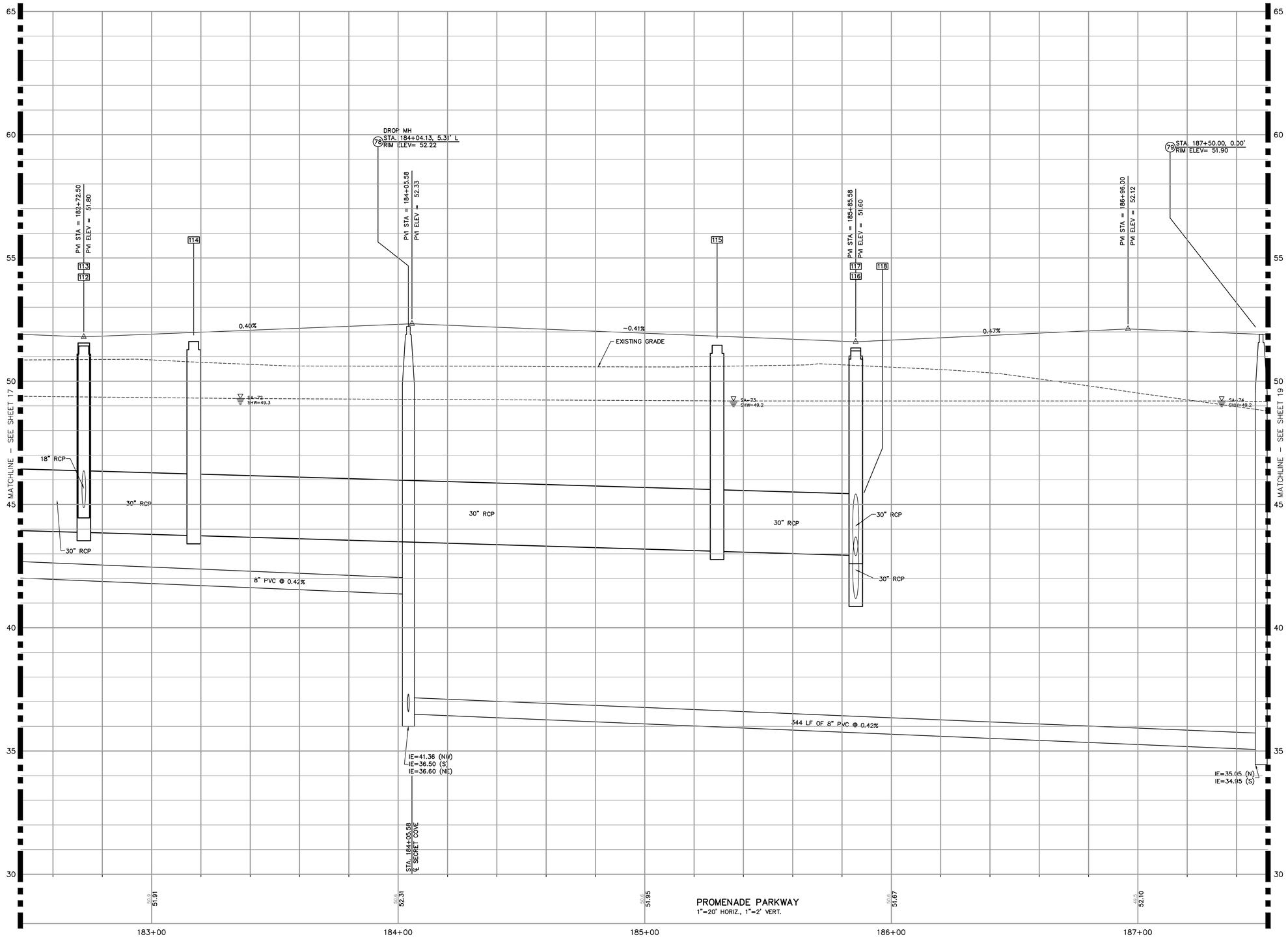

PAUL E. SKIDMORE
LICENSE
NO. 39631
STATE OF FLORIDA
PROFESSIONAL ENGINEER

JOB NO.	506-100C
SHTS.	213
DATE	5-1-2015
DESIGNED	RAH
DRAWN	RAH
REVIEWED	PES
QC	

NO.	DATE	REVISIONS	APP'D

DESIGNED FOR
ASTURIA COMMUNITY DEVELOPMENT DISTRICT

660 PALENCIA CLUB DRIVE, ST. AUGUSTINE, FLORIDA 32095
PHONE: (904) 819-0300 - FAX: (904) 810-0525

PROJECT NAME: Asturia | **PROMENADE PARKWAY**

SHEET NAME: **ROADWAY PROFILE (4)**

FLORIDA DESIGN CONSULTANTS, INC.
THINK IT. ACHIEVE IT.
2023 NW 67TH PLACE, BLDG. 6, GAINESVILLE, FLORIDA 32653
PHONE: (800) 532-1047 FAX: (727) 848-3648 WWW.FLDESIGN.COM C.A. NO. 7421

©Copyright 2015 Florida Design Consultants, Inc. Drawings and concepts may not be used or reproduced without written permission.

K:\213\ProjData\CivilDocs\Plans\Promenade Parkway\213_PROMENADE-PROF.DWG - May 27, 2015 @ 12:11pm - aprilsw

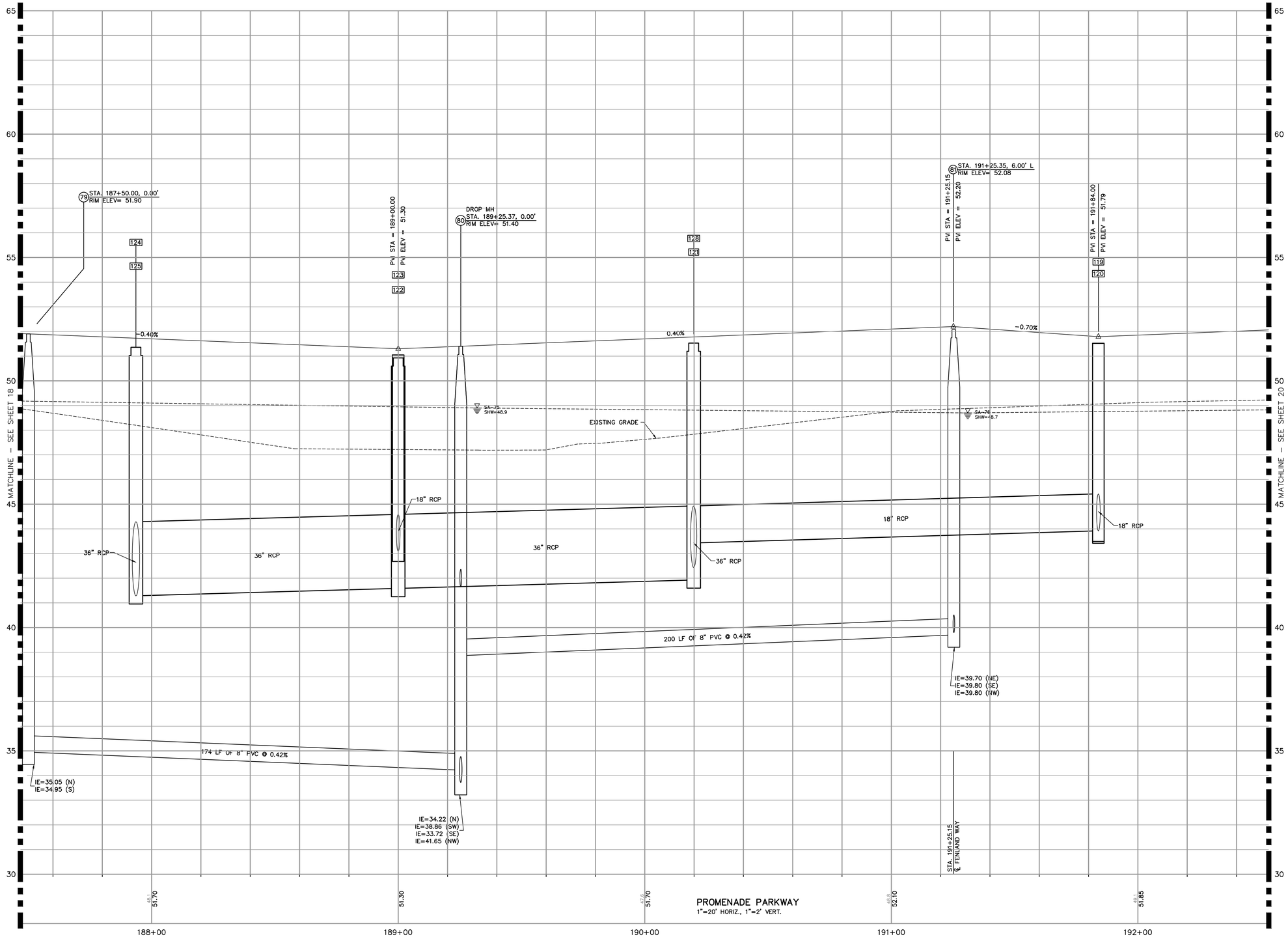

PROMENADE PARKWAY
1"=20' HORIZ., 1"=2' VERT.

PAUL E. SKIDMORE
LICENSE
NO. 39631
STATE OF FLORIDA
PROFESSIONAL ENGINEER

JOB NO.	SHEET	DATE	DESIGNED	DRAWN	CHECKED	QC
506-100C	213	5-1-2015	RAH	RAH	PES	

NO.	DATE	REVISIONS	APP'D

DESIGNED FOR:
ASTURIA COMMUNITY DEVELOPMENT DISTRICT
605 PALMCOR CLUB DRIVE, ST. AUGUSTINE, FLORIDA 32095
PHONE: (904) 810-0500 - FAX: (904) 810-0525

PROJECT NAME: Asturia | **PROMENADE PARKWAY**

SHEET NAME: **ROADWAY PROFILE (5)**

FLORIDA DESIGN CONSULTANTS, INC.
THINK IT. ACHIEVE IT.
2020 NORTH TERRY WILLIAMS BLVD., BUILDING A, FLORIDA 34655
PHONE: (800) 532 - 1047 FAX: (727) 848 - 3648 WWW.FLDESIGN.COM C.A. NO. 7421

SHEET 19 OF 38

© Copyright 2015 Florida Design Consultants, Inc. Drawings and concepts may not be used or reproduced without written permission.

K:\2121Prj-Data\ConstDocs\Plans\Promenade Parkway\213_PROMENADE_PROF.DWG – May 27, 2015 @ 12:12pm – myriaks

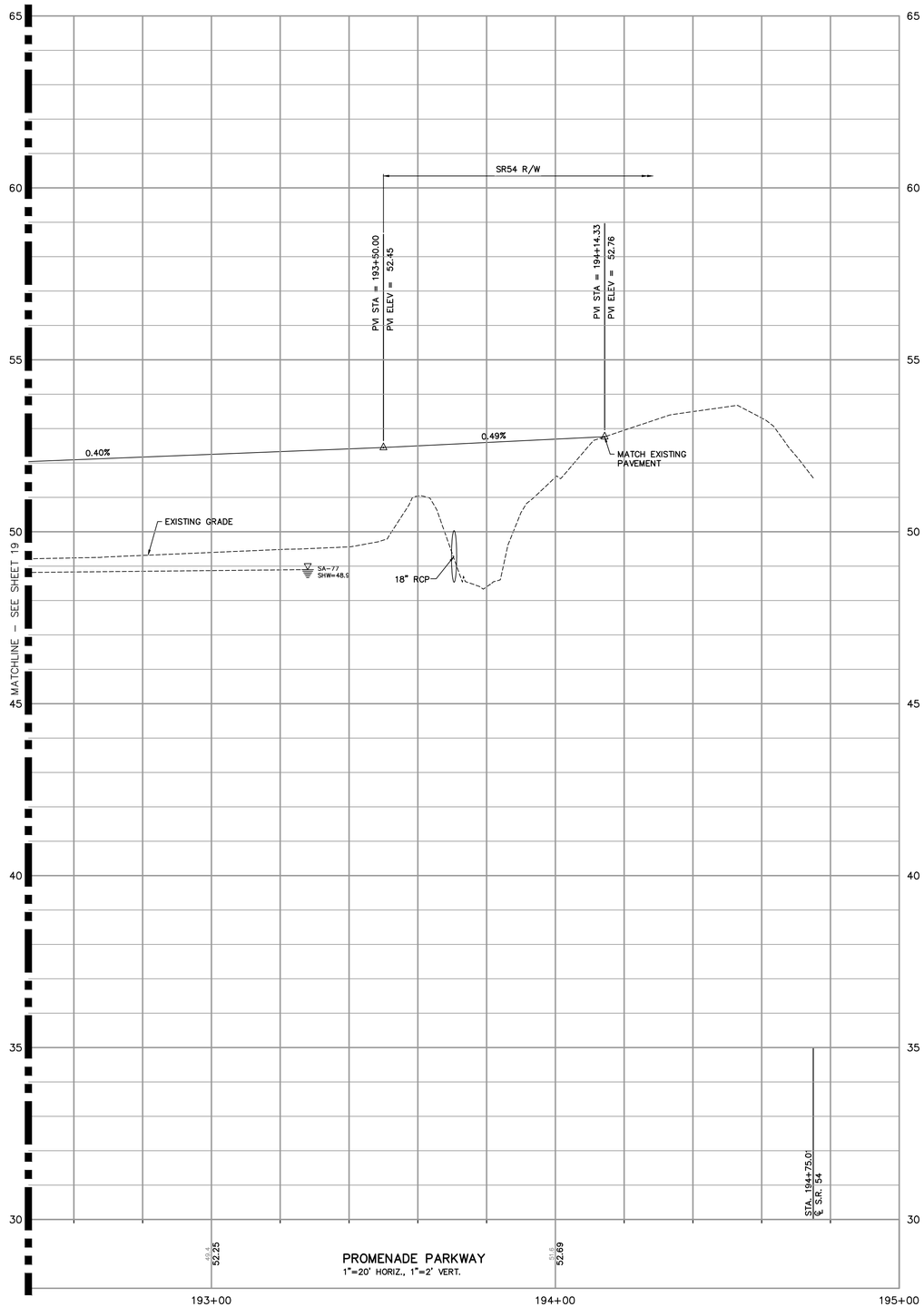

PAUL E. SKIDMORE
LICENSE
NO. 39631
STATE OF FLORIDA
PROFESSIONAL ENGINEER

JOB NO.	SHTS.	DATE	DESIGNED	DRAWN	CHECKED	QC
506-100C	213	5-1-2015		RAH	PES	

NO.	DATE	REVISIONS	APP'D

DESIGNED FOR
ASTURIA COMMUNITY DEVELOPMENT DISTRICT
605 PALMOA CLUB DRIVE, ST. AUGUSTINE, FLORIDA 32095
PHONE: (904) 810-0500 - FAX: (904) 810-0525

PROJECT NAME: Asturia | **PROMENADE PARKWAY**

SHEET NAME: **ROADWAY PROFILE (6)**

FLORIDA DESIGN CONSULTANTS, INC.
THINK IT. ACHIEVE IT.
2023 ONSTAR BOULEVARD, SUITE 100 PORT RICHEY, FLORIDA 34655
PHONE: (800) 532 - 1047 FAX: (727) 848 - 3648 WWW.FLDESIGN.COM C.A. NO. 7421

© Copyright 2015 Florida Design Consultants, Inc. Drawings and concepts may not be used or reproduced without written permission.

K:\21\Projects\ConstDocs\Plans\Promenade Parkway\213_PROMENADE_PROF.DWG – May 27, 2015 @ 12:12pm – myrlas

K:\213\ProjData\ConstDocs\Plans\Promenade Parkway\213_PROMENADE-PSEC.DWG - May 27, 2015 @ 12:35pm - asyrisko

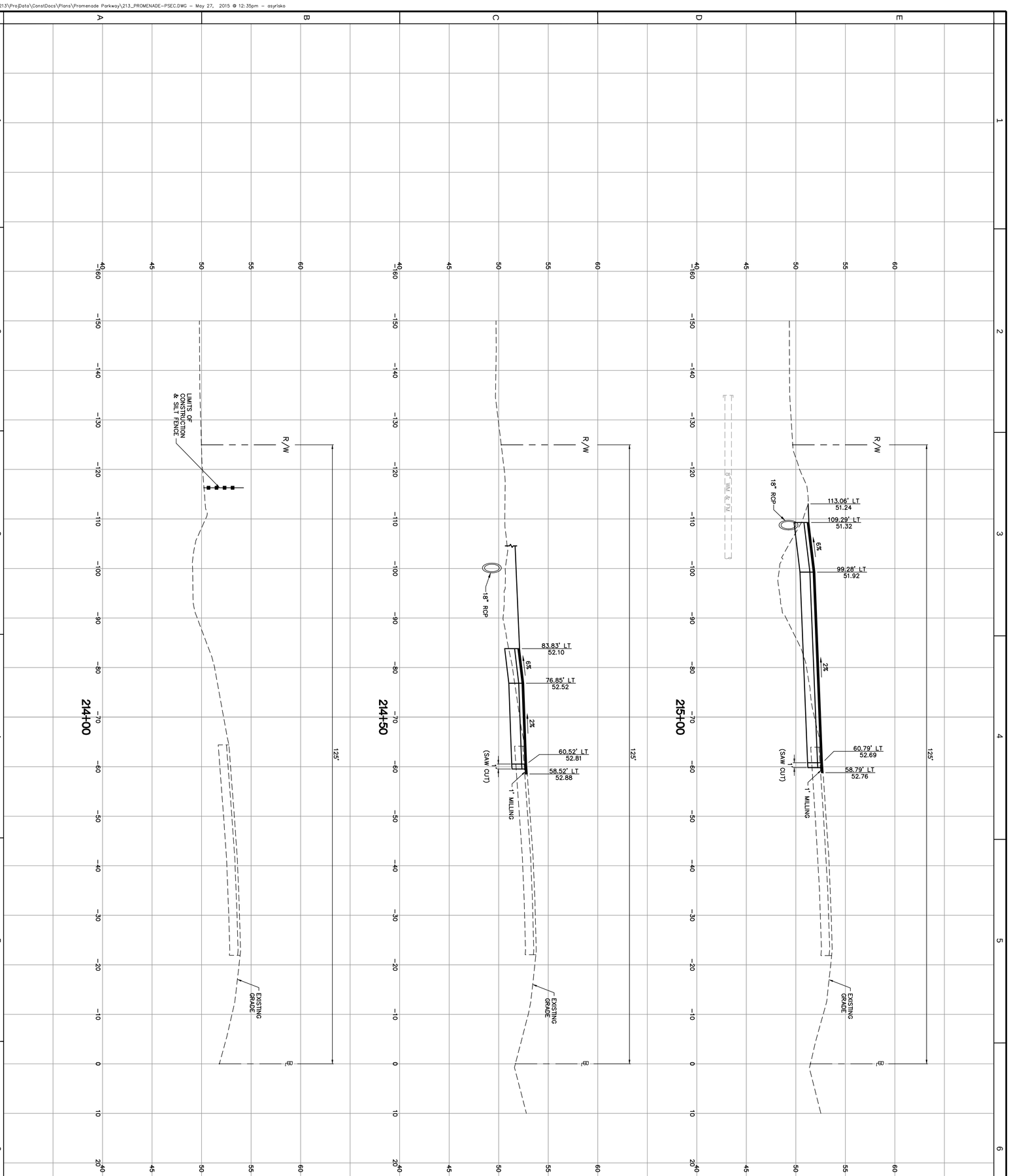

SCALE: 1"=10' HORIZ., 1"=5' VERT.

SHEET 21 OF 38

FLORIDA DESIGN CONSULTANTS, INC.
THINK IT. ACHIEVE IT.
3030 STARKEY BOULEVARD, NEW PORT RICHEY, FLORIDA 34655
PHONE: (800) 532 - 1047 FAX: (727) 848 - 3648 WWW.FLDESIGN.COM C.A. NO. 7421

DESIGNED FOR
ASTURIA COMMUNITY DEVELOPMENT DISTRICT
605 PALENCIA CLUB DRIVE, ST. AUGUSTINE, FLORIDA 32095
PHONE: (904) 810-0500 - FAX: (904) 810-0525

PROJECT NAME: Asturia | **PROMENADE PARKWAY**

SHEET NAME: **SR-54 TURN LANE CROSS SECTIONS**

NO.	DATE	REVISIONS	APPD BY

JOB NO.	506-100C
LEN.	213
DATE	5-1-2015
DESIGNED	RAH
DRAWN	RAH
CHECKED	PES
Q.C.	

PAUL E. SYRISKO, LICENSE NO. 39631, STATE OF FLORIDA, PROFESSIONAL ENGINEER

©Copyright 2015 Florida Design Consultants, Inc. Drawings and concepts may not be used or reproduced without written permission.

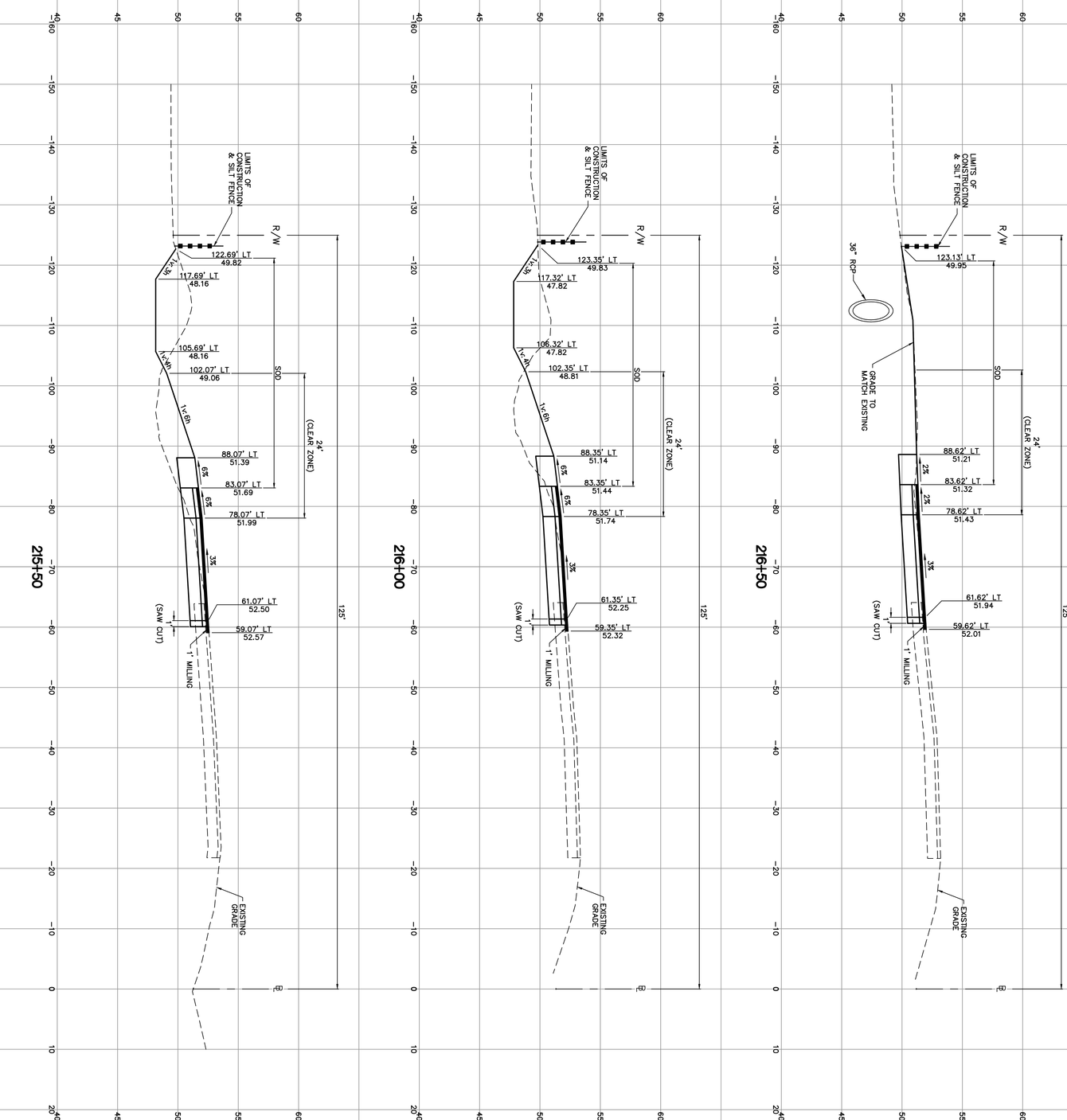

SCALE: 1"=10' HORIZ., 1"=5' VERT.

FLORIDA DESIGN CONSULTANTS, INC.
THINK IT. ACHIEVE IT.
3030 STARKEY BOULEVARD, NEW PORT RICHEY, FLORIDA 34655
PHONE: (800) 532 - 1047 FAX: (727) 848 - 3648 WWW.FLDESIGN.COM C.A. NO. 7421

DESIGNED FOR
ASTURIA COMMUNITY DEVELOPMENT DISTRICT
605 PALENCIA CLUB DRIVE, ST. AUGUSTINE, FLORIDA 32095
PHONE: (904) 810-0500 - FAX: (904) 810-0525

PROJECT NAME
Asturia | **PROMENADE PARKWAY**

SHEET NAME
SR-54 TURN LANE CROSS SECTIONS

NO.	DATE	REVISIONS	APPD. BY

JOB NO. 506-100C
DPN 213
DATE 5-1-2015
DESIGNED RAH
DRAWN RAH
CHECKED PES
Q.C.

PAUL E. SYLISKO LICENSE NO. 39631 STATE OF FLORIDA PROFESSIONAL ENGINEER

©Copyright 2015 Florida Design Consultants, Inc. Drawings and concepts may not be used or reproduced without written permission.

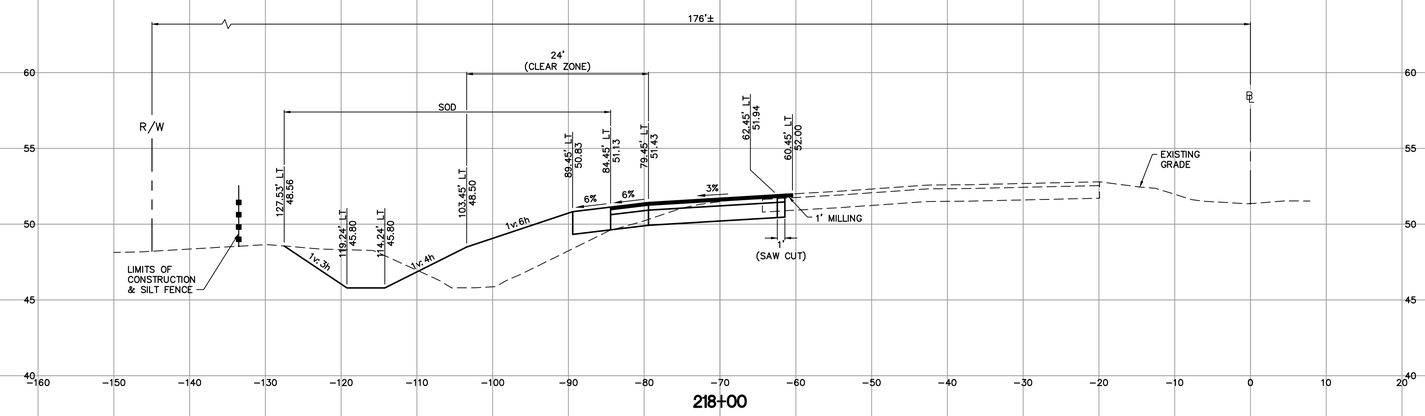

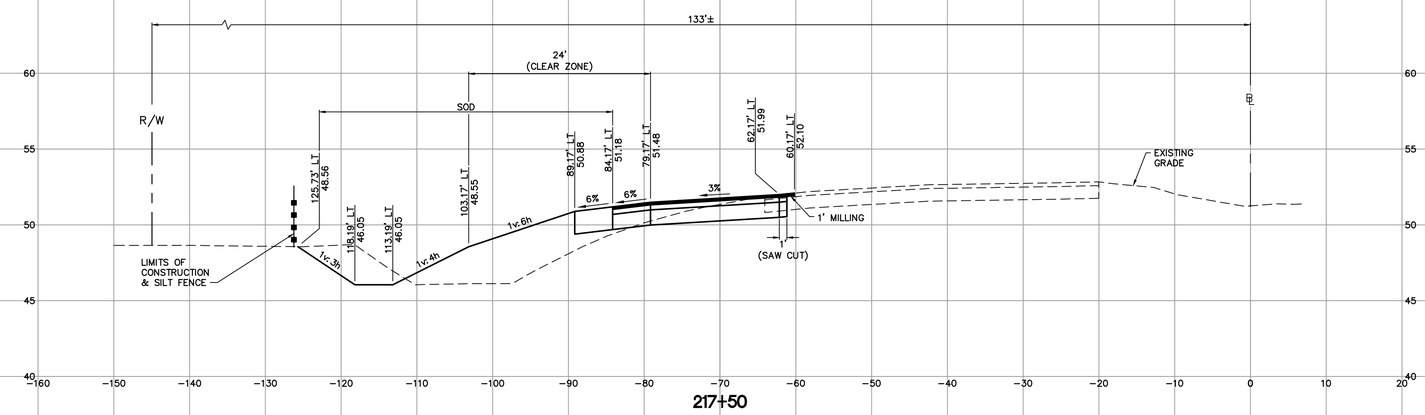

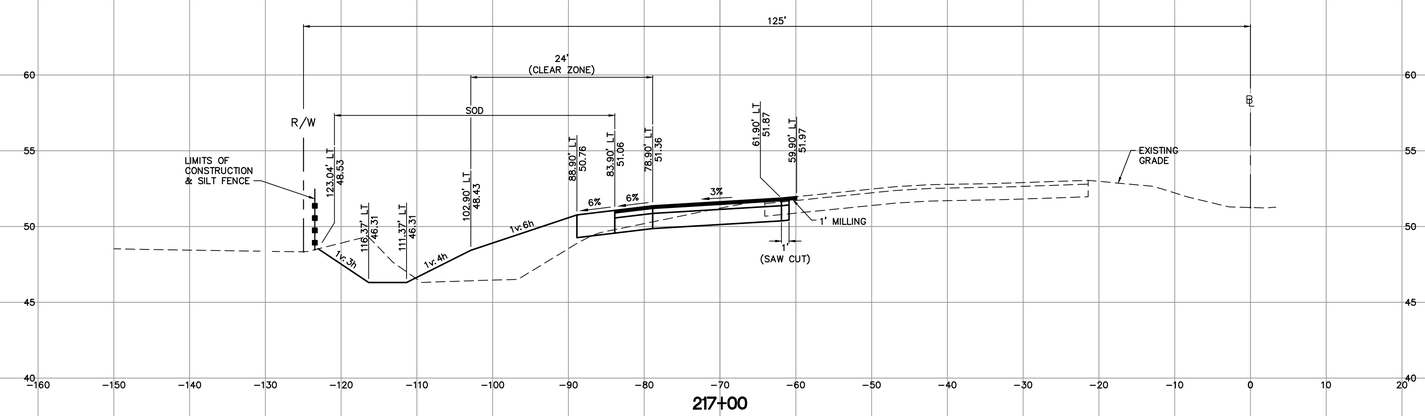

SCALE: 1"=10' HORIZ.,
1"=5' VERT.

PAUL E. SKIDMORE
LICENSE
NO. 39631
STATE OF
FLORIDA
PROFESSIONAL ENGINEER

JOB NO.	506-100C
EPR	213
DATE	5-1-2015
DESIGNED	RAH
DRAWN	RAH
REVIEWED	PES
CHK.	

NO.	DATE	REVISIONS	APP'D

DESIGNED FOR
ASTURIA COMMUNITY DEVELOPMENT DISTRICT
605 PALMERO CLUB DRIVE, ST. AUGUSTINE, FLORIDA 32095
PHONE: (904) 810-0500 - FAX: (904) 810-0525

PROJECT NAME
PROMENADE PARKWAY

SHEET NAME
SR-54 TURN LANE CROSS SECTIONS

FLORIDA DESIGN CONSULTANTS, INC.
THINK IT. ACHIEVE IT.
3030 STARKEY BOULEVARD, NEW PORT RICHEY, FLORIDA 34655
PHONE: (800) 532 - 1047 FAX: (727) 848 - 3648 WWW.FLDESIGN.COM C.A. NO. 7421

©Copyright 2015 Florida Design Consultants, Inc. Drawings and concepts may not be used or reproduced without written permission.

K:\213\Eng\Data\ConstDocs\Plans\Promenade Parkway\213_PROMENADE-PSEC.DWG – May 27, 2015 @ 12:12pm – mayrides

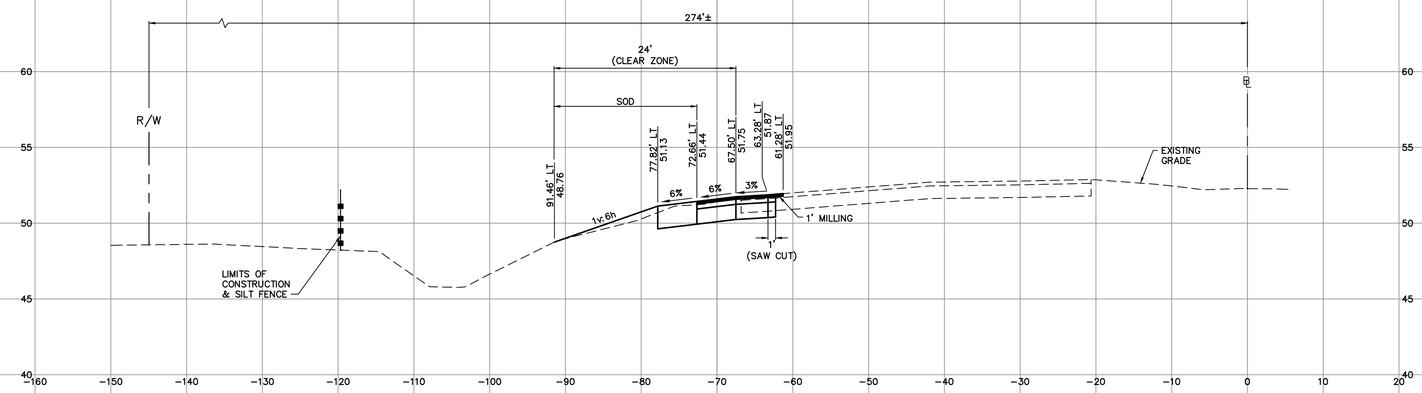

219+50

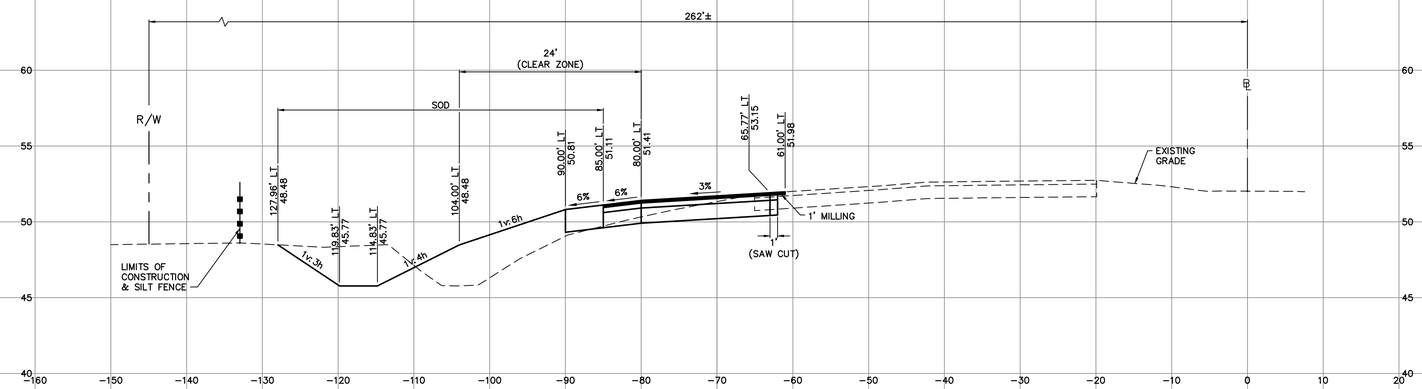

219+00

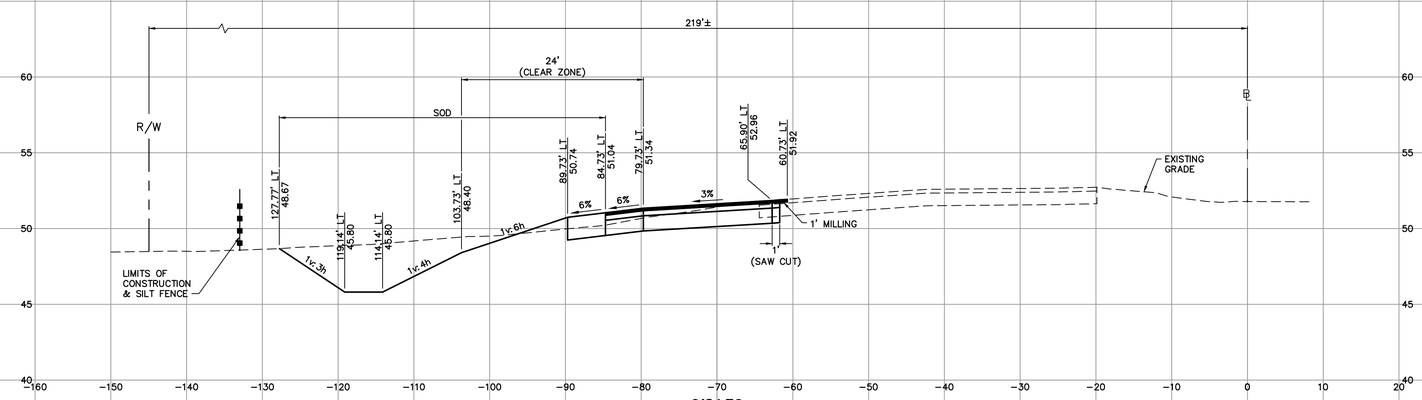

218+50

SCALE: 1"=10' HORIZ.,
1"=5' VERT.

PAUL E. SKIDMORE
LICENSE
NO. 39631
STATE OF
FLORIDA
PROFESSIONAL ENGINEER

JOB NO.	506-100C
SPR	213
DATE	5-1-2015
DESIGNED	RAH
DRAWN	RAH
REVIEWED	PES
QC	

NO.	DATE	REVISIONS	APP'D

DESIGNED FOR
ASTURIA COMMUNITY DEVELOPMENT DISTRICT
605 PALENCIA CLUB DRIVE, ST. AUGUSTINE, FLORIDA 32095
PHONE: (904) 810-0500 FAX: (904) 810-0525

PROJECT NAME
Asturia
PROMENADE PARKWAY

SHEET NAME
SR-54 TURN LANE CROSS SECTIONS

FLORIDA DESIGN CONSULTANTS, INC.
THINK IT. ACHIEVE IT.
3030 STARKEY BOULEVARD, NEW PORT RICHEY, FLORIDA 34655
PHONE: (800) 532 - 1047 FAX: (727) 848 - 3648 WWW.FLDESIGN.COM C.A. NO. 7421

© Copyright 2015 Florida Design Consultants, Inc. Drawings and concepts may not be used or reproduced without written permission.

K:\213\Proj\Dsn\ConstDocs\Plans\Promenade Parkway\213_PROMENADE-PSEC.DWG - May 27, 2015 @ 12:12pm - aprylsa

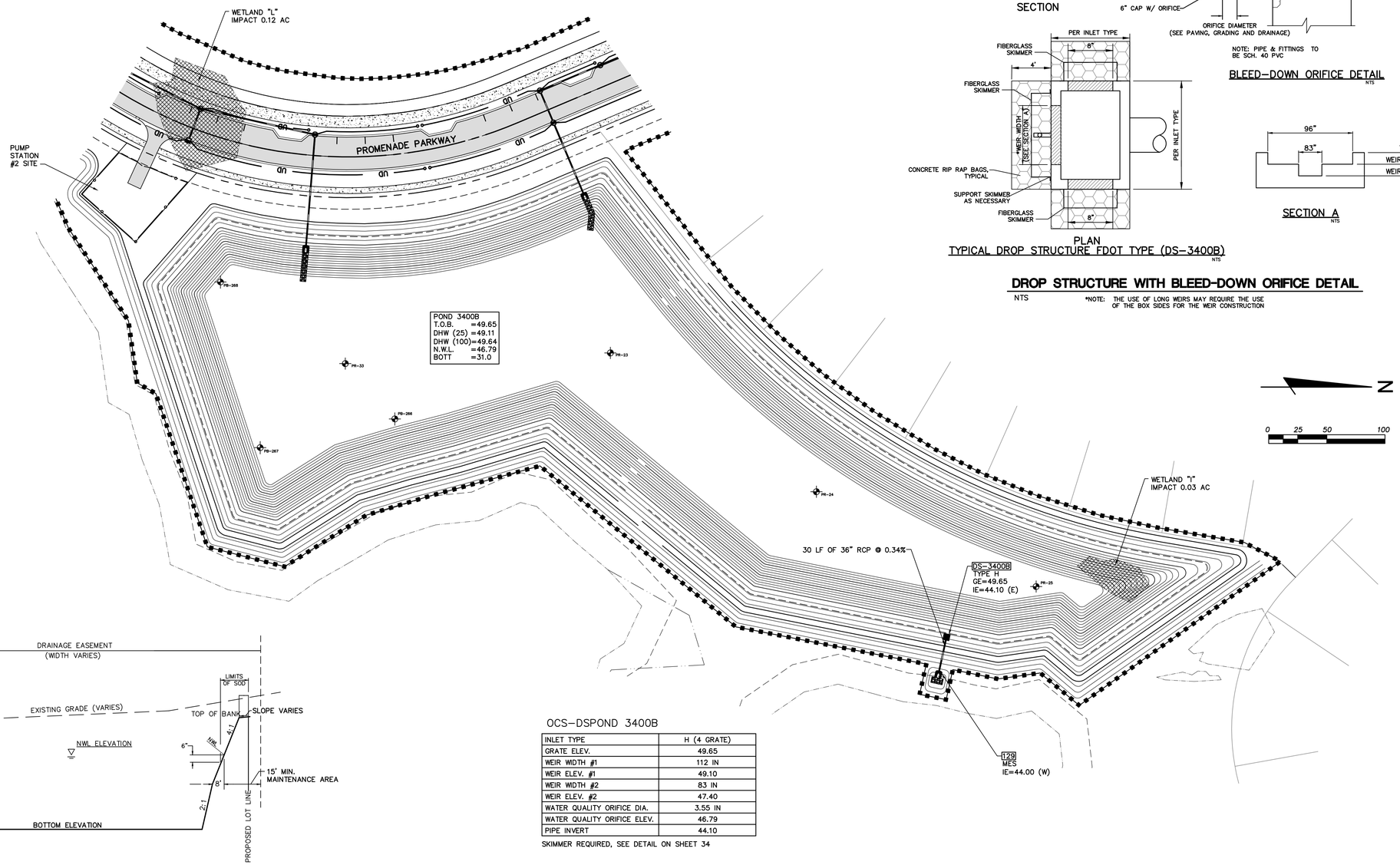

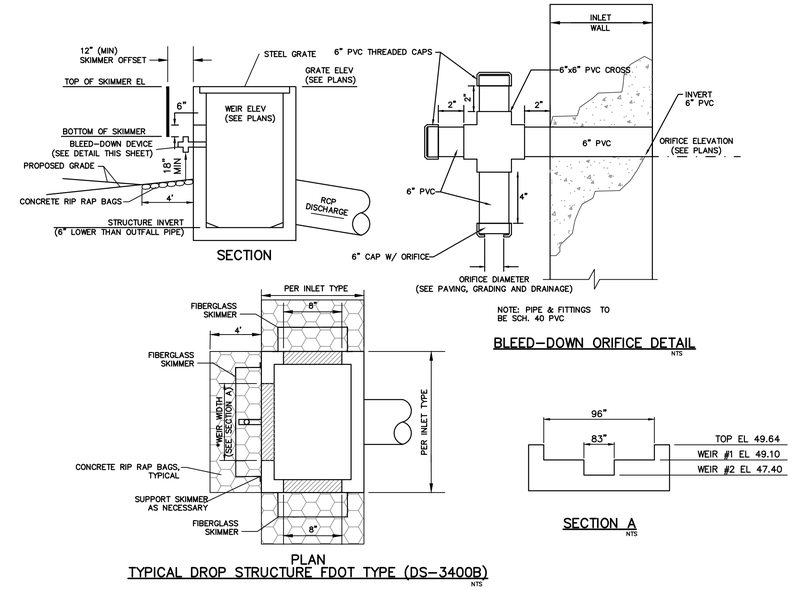

DROP STRUCTURE WITH BLEED-DOWN ORIFICE DETAIL

NTS

*NOTE: THE USE OF LONG WEIRS MAY REQUIRE THE USE OF THE BOX SIDES FOR THE WEIR CONSTRUCTION

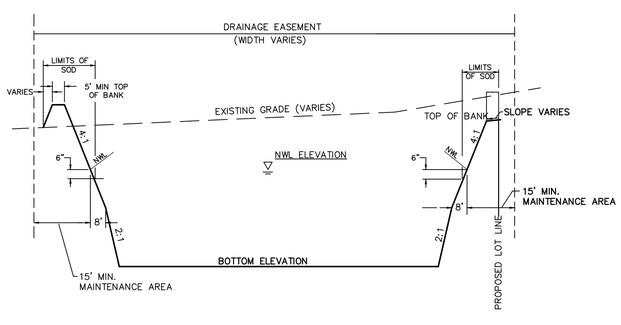

TYPICAL POND SECTION

NTS

TYP ANY

OCS-DSPOND 3400B

INLET TYPE	H (4 GRATE)
GRATE ELEV.	49.65
WEIR WIDTH #1	112 IN
WEIR ELEV. #1	49.10
WEIR WIDTH #2	83 IN
WEIR ELEV. #2	47.40
WATER QUALITY ORIFICE DIA.	3.55 IN
WATER QUALITY ORIFICE ELEV.	46.79
PIPE INVERT	44.10

SKIMMER REQUIRED, SEE DETAIL ON SHEET 34

PAUL E. SKIDMORE
LICENSE
NO. 39631
STATE OF FLORIDA
PROFESSIONAL ENGINEER

JOB NO.	SITE	DATE	DESIGNED	DRAWN	CHECKED
506-100C	213	5-1-2015	RAH	RAH	PES

NO.	DATE	REVISIONS	APP'D

DESIGNED FOR
ASTURIA COMMUNITY DEVELOPMENT DISTRICT
605 PALMCOAST CLUB DRIVE, ST. PAGO BEACH, FLORIDA 32095
PHONE: (904) 810-0500 - FAX: (904) 810-0525

PROJECT NAME: Asturia | PROMENADE PARKWAY

SHEET NAME: **POND GRADING PLAN**

FLORIDA DESIGN CONSULTANTS, INC.
THINK IT. ACHIEVE IT.
3030 STARKEY BOULEVARD, NEW PORT RICHEY, FLORIDA 34655
PHONE: (800) 532 - 1047 FAX: (727) 848 - 3648 WWW.FLDESIGN.COM C.A. NO. 7421

© Copyright 2015 Florida Design Consultants, Inc. Drawings and concepts may not be used or reproduced without written permission.

K:\213\Eng\Data\ConstDocs\Plans\Promenade Parkway\213_PROMENADE_PRO001.dwg - May 27, 2015 @ 12:13pm - rayrake

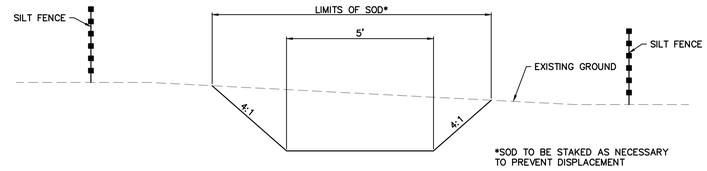

SECTION A/26
N.T.S.

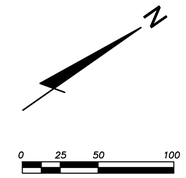

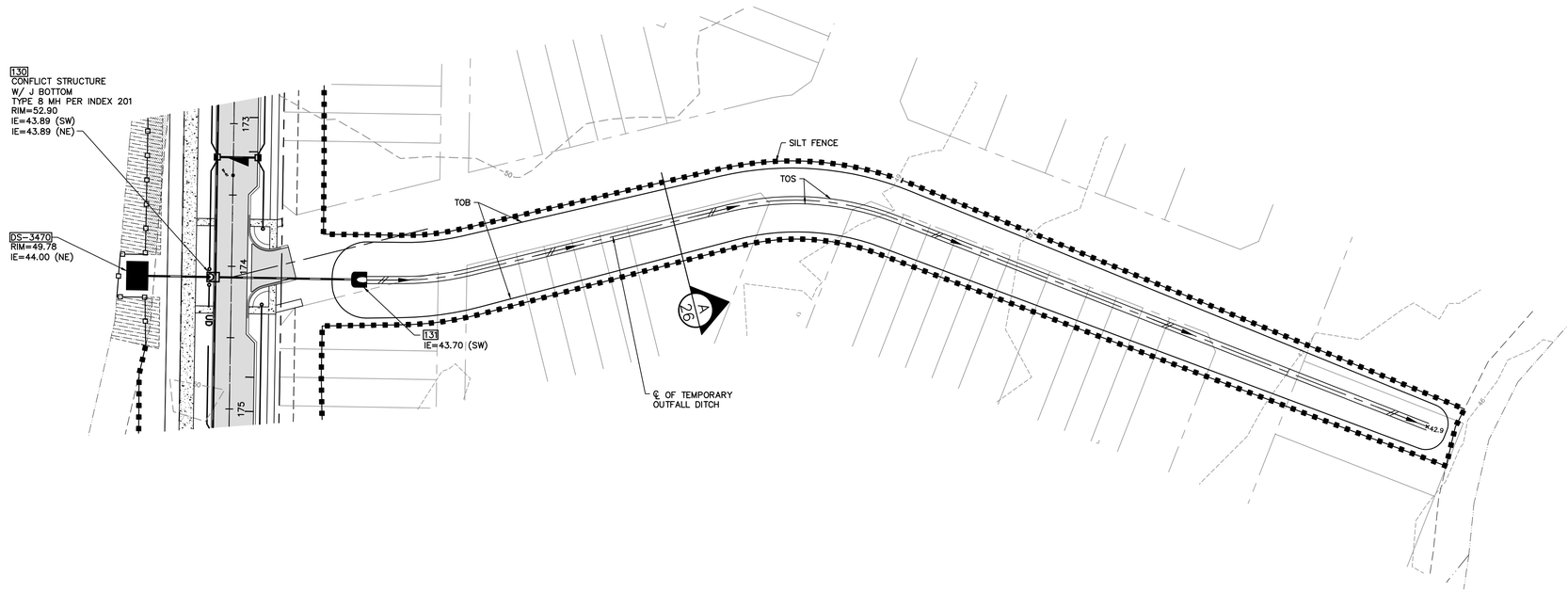

LEGEND

- = Overland Flow Direction
- = Swale Flow Direction
- = Concentrated Drainage Flow Direction
- 17 = Proposed Storm Structure Number
- +42.1 = Proposed Spot Elevation
- + 6.17 = Existing Spot Elevation
- = Proposed Storm Structure & Pipe
- (OA) = Existing Tree
- = Proposed Silt Fence
- = Proposed Double Silt Fence
- = Floating Turbidity Barrier
- = Wetland/Surface Water Jurisdictional Limit
- = Drop Curb for Sidewalk Connections
- = Limits of Buffer Encroachment

PAUL E. SKIDMORE
LICENSE
NO. 39631
STATE OF
FLORIDA
PROFESSIONAL ENGINEER

JOB NO.	SHEET	DATE	DRAWN	DESIGNED	QC
506-100C	213	5-1-2015	RAH	RAH	PES

NO.	DATE	REVISIONS	APP'D

DESIGNED FOR
ASTURIA COMMUNITY DEVELOPMENT DISTRICT

6935 PALMBOCA CULBRANC ST. AUGUSTINE, FLORIDA 32095
PHONE: (904) 810-0500 - FAX: (904) 810-0525

PROJECT NAME: Asturia | **PROMENADE PARKWAY**

SHEET NAME: **STORM SEWER OUTFALL PLAN**

FLORIDA DESIGN CONSULTANTS, INC.
THINK IT. ACHIEVE IT.
3030 STARKEY BOULEVARD, NEW PORT RICHEY, FLORIDA 34655
PHONE: (800) 532 - 1047 FAX: (727) 848 - 3648 WWW.FLDESIGN.COM C.A. NO. 7421

SHEET 26 OF 38

© Copyright 2015 Florida Design Consultants, Inc. Drawings and concepts may not be used or reproduced without written permission.

K:\213\FinyDsh\ConstDocs\Plans\Promenade Parkway\213_PROMENADE-PRPND2.dwg - May 27, 2015 @ 12:13pm - rayrake

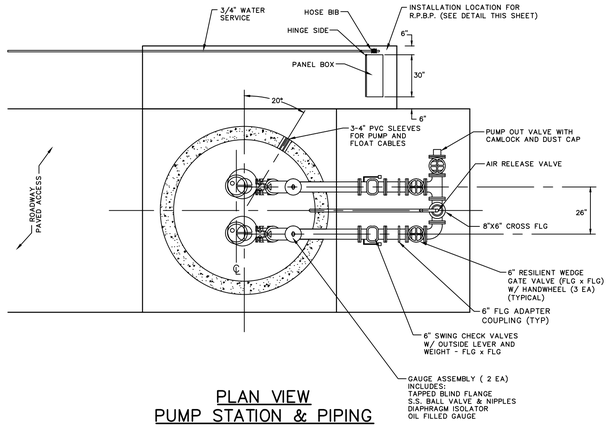

PLAN VIEW
PUMP STATION & PIPING

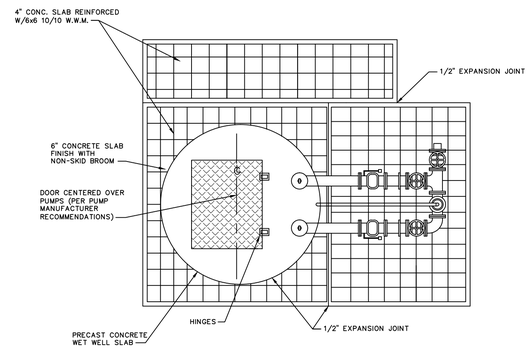

PUMP STATION & PIPING SLAB PLAN VIEW

PUMP STATION SLAB & PIPING PLAN PASCO COUNTY UTILITIES
NTS

DESIGN DATA

FLOW

UNITS	611 RESIDENTIAL
COMMERCIAL	50,000 SF
OFFICE	50,000 SF
AVERAGE DAILY FLOW	114 GPM
DESIGN (PEAK) FLOW	400 GPM
STATIC HEAD LOSS	27 FEET
FRICTION HEAD LOSS PLUS MANIFOLD HEAD	58.0 FEET
TOTAL DYNAMIC HEAD	77.0 FEET

DESIGN FLOW

400 GPM @ 84' TDH

PUMP

MAKE	ABS
MODEL	XFP100G-CB1-PE185-4
IMPELLER	250 mm
MOTOR	25 HP, 1800 RPM 460V, 3 PHASE, 60 HZ
SOLIDS	4"
OPERATING POINT	407 GPM @ 88 TDH

PIPING

PUMP DISCHARGE SIZE	= 4"
WET WELL PIPING	= 6"
FORCE MAIN SIZE	= 8"

WELL

INSIDE DIA. OF WET WELL	6'
TOP ELEVATION	52.50
BOTTOM ELEVATION	26.50
INVERT ELEVATION	33.00
C.Y. OF BALLAST REQ'D.	6 CY

ALARMS

BACK-UP AUDIBLE ALARM ON EL.	33.00
AUDIBLE ALARM ON EL.	33.00
LIGHT ON EL.	33.00
LAG PUMP ON EL.	32.50
LEAD PUMP ON EL.	32.00
PUMP OFF EL. (LWL)	28.00

WET WELL HATCH OPENING

41.3"X59.8" (TWO PUMPS) WITH SAFETY NET

TOP SLAB

AS SHOWN w/EXP JOINTS

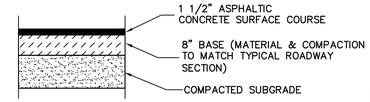

ALTERNATE PAVEMENT SECTION:
6" CONCRETE (3000 PSI W/6 X 6 10/10 W.W.M.)
OVER COMPACTED SUBGRADE

12' WIDE ACCESS ROADWAY SECTION
NTS

NOTE: B.F.E. (100 YR.) = 49.58
TOP OF LIFT STATION SHALL BE 12" ABOVE THE 100 YR B.F.E. EL. OR 12" ABOVE CENTERLINE OF ROAD, WHICHEVER IS GREATER.

GENERAL NOTES:

1. ALL PIPING WITHIN THE WETWELL (LARGER THAN 4") AND ALL ABOVE GROUND PIPING SHALL BE MANUFACTURED FLANGED PIPE. FIELD FABRICATED FLANGES (UNI-FLANGE OR MEGAFLANGE) WILL NOT BE PERMITTED.
2. ALL DUCTILE IRON PIPE AND FITTINGS SHALL BE PROVIDED WITH CERAMIC EPOXY INTERIOR LINING (PROTECTO 401), UNLESS PIPING IS STAINLESS STEEL.
3. ALL UNDERGROUND FITTINGS SHALL BE RESTRAINED MECHANICAL JOINT AND SHALL BE PROVIDED WITH PROTECTO 401 INTERIOR LINING.
4. IF LIFT CABLES ARE USED, LIFTING RINGS SHALL BE PROVIDED EVERY 4 FT.
5. INDIVIDUAL WALL PENETRATION SLEEVES SHALL BE PROVIDED FOR EACH PUMP CABLE.
6. ALL HARDWARE (INCLUDING FLANGE BOLTS & NUTS) SHALL BE STAINLESS STEEL.
7. ALL ABOVE GROUND PIPING SHALL BE PAINTED SAFETY GREEN.
8. SLAB ELEVATION SHALL BE 12 IN. ABOVE C/L OF ROADWAY OR 12 IN. ABOVE 100 YEAR FLOOD PLAIN – WHICHEVER IS HIGHER.
9. TECHNICAL SPECIFICATIONS SHALL BE MOST CURRENT COPY OF PASCO COUNTY'S – STANDARDS FOR DESIGN AND CONSTRUCTION OF WATER AND WASTEWATER FACILITIES.
10. POSITION PANEL BOX SO OPERATOR'S BACK IS NOT TO WET WELL WHILE FACING BOX. PANEL BOX SHALL BE LOCATED TO ALLOW UNOBSTRUCTED ACCESS TO WET WELL BY EQUIPMENT UTILIZING PAVED ACCESS ROAD. (SEE PLAN VIEW FOR ACTUAL LOCATION.)
11. THE CONTROL CIRCUITRY SHALL PROVIDE FOR ALTERNATING OPERATION OF THE LEAD PUMP UNDER NORMAL CONDITIONS. PASCO COUNTY STANDARDS FOR DESIGN AND CONSTRUCTION OF WATER, WASTEWATER, AND RECLAIMED WATER FACILITIES. JUNE 1995.
12. CONTRACTOR SHALL PREVENT FLOTATION OF PUMP STATION DURING ALL PHASES OF CONSTRUCTION. SEE DESIGN DATA, C.Y. OF BALLAST REQUIRED.
13. PUMP STATION SHALL BE EQUIPPED WITH AN EFFECTIVE METHOD FOR DETECTING SHAFT SEAL FAILURE OR POTENTIAL SEAL FAILURE. PUMPS SHALL BE PROVIDED WITH SEAL FAILURE PROBES THAT WILL CAUSE A RED LIGHT TO TURN ON AT THE CONTROL PANEL.
14. EMERGENCY BACK-UP BATTERY OPERATED AUDIO ALARM SYSTEM WITH INDEPENDENT FLOAT SHALL BE PROVIDED AS REQUIRED BY PASCO COUNTY UTILITIES DEPARTMENT.
15. AREAS WITHIN THE PUMP STATION TRACT SHALL BE COVERED WITH 4" OF #57 STONE. STONE SHALL BE INCLUDED WITH THE PUMP STATION COSTS.
16. ALL UNDERGROUND PIPING, ELECTRIC, WATER SERVICE, ETC., SHALL BE WITHIN THE PUMPING STATION TRACT/PARCEL AS DESIGNATED ON THE PLANS.
17. THE DEVELOPER'S GEOTECHNICAL ENGINEER SHALL PROVIDE THE WET WELL FOUNDATION DESIGN.

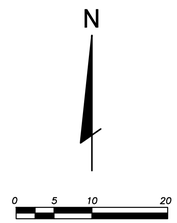

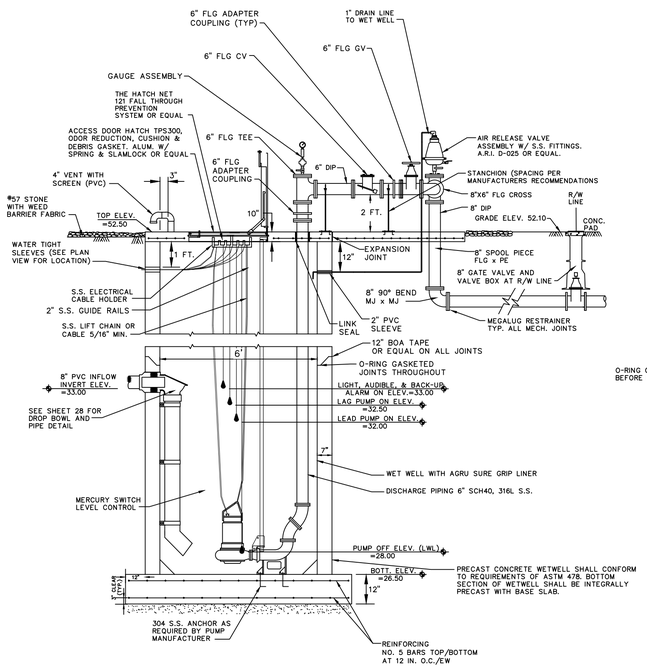

TYPICAL PUMP STATION ELEVATION & PIPING
PASCO COUNTY UTILITIES
NTS

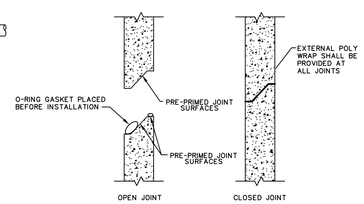

PRECAST JOINT DETAIL
NTS

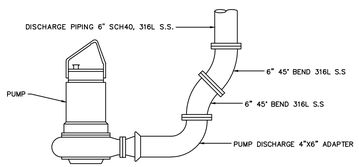

PUMP PIPING CONNECTION DETAIL
NTS

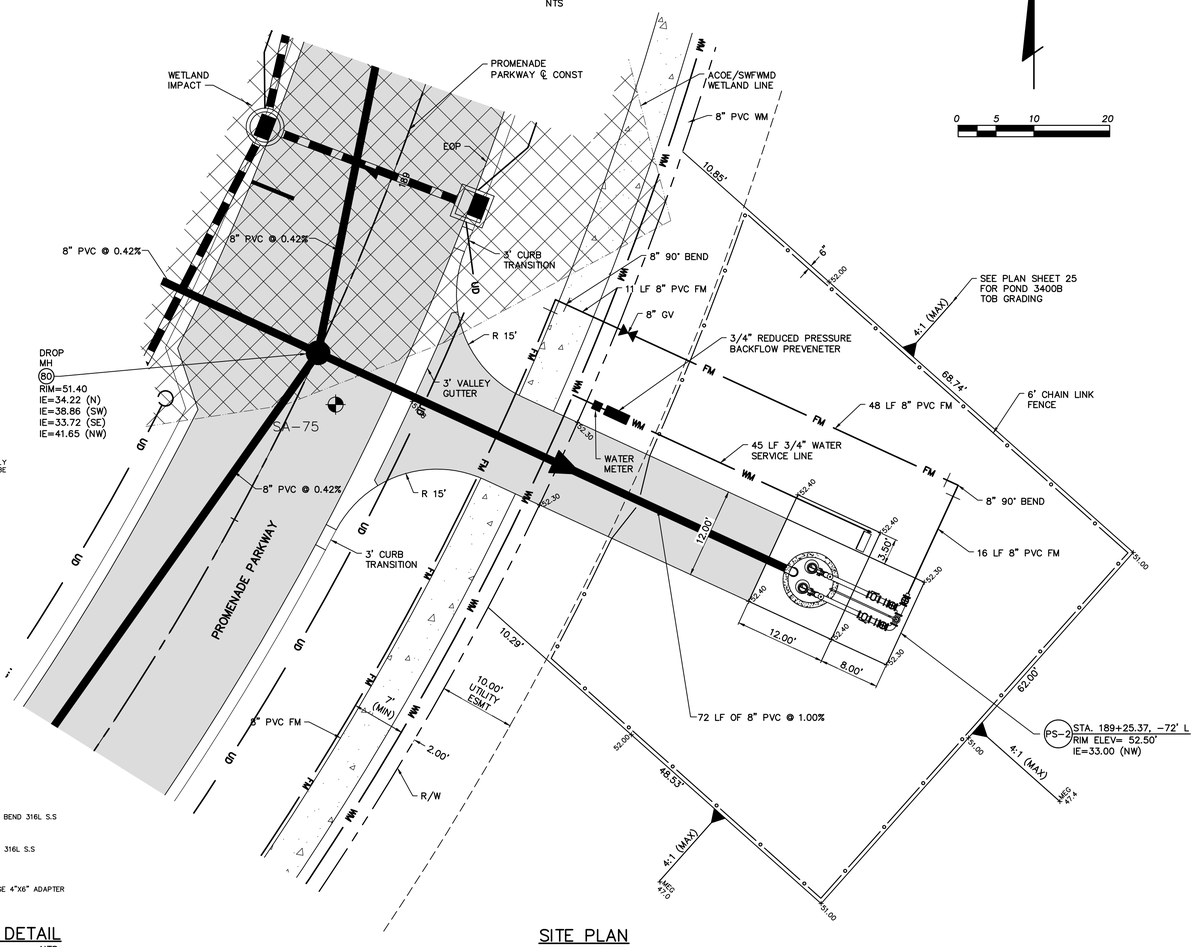

SITE PLAN
1"=10'

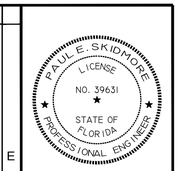

JOB NO.	506-100C
DSN.	213
DATE	5-1-2015
DR/CHKD	RAH / RAH
DESIGNED	PES

NO.	DATE	REVISIONS	APP'D

DESIGNED FOR
ASTURIA COMMUNITY DEVELOPMENT DISTRICT
605 PALMONE CLUB DRIVE, ST. AUGUSTINE, FLORIDA 32095
PHONE: (904) 810-0500 - FAX: (904) 810-0525

PROJECT NAME: Asturia | **PROMENADE PARKWAY**

SHEET NAME: **SANITARY SEWER PUMP STATION PLAN AND DETAILS (1)**

FLORIDA DESIGN CONSULTANTS, INC.
— THINK IT. ACHIEVE IT. —
3030 STARKEY BOULEVARD, NEW PORT RICHEY, FLORIDA 34655
PHONE: (800) 532 - 1047 FAX: (727) 848 - 3648 WWW.FLDESIGN.COM C.A. NO. 7421

©Copyright 2015 Florida Design Consultants, Inc. Drawings and concepts may not be used or reproduced without written permission.

K:\213\ProData\ConstDocs\Plans\Promenade Parkway\213_PROMENADE-RLS1.DWG – May 27, 2015 @ 12:13pm – stylake

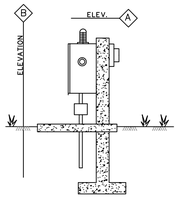

PANEL BOX ELEV.

NOTE:

1. POSITION PANEL BOX SO OPERATOR'S BACK IS NOT TO WET WELL WHILE FACING BOX.
2. PANEL BOX SHALL BE LOCATED TO ALLOW UNOBSTRUCTED ACCESS TO WET WELL BY PAVED ACCESS ROAD.
3. PANEL ELEVATION SHALL BE ABOVE 100-YEAR FLOOD ELEV. AND MUST BE SHOWN ON ALL PLANS.
4. DUPLEXOR SHALL BE AN T.T.I. 6012 ANY ALTERNATE TYPE MUST BE SPECIFICALLY APPROVED BY PASCO COUNTY.

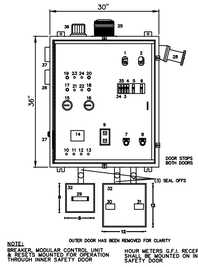

1 – MAIN BREAKER
2 – EMERGENCY BREAKER
3 – RECEPTACLE BREAKER
4 – CONTROL BREAKER
5 – MB1 MOTOR BREAKER 1
6 – MB2 MOTOR BREAKER 2
7 – OVERLOAD 1 RESET
8 – OVERLOAD 2 RESET
9 – DUPLEX RECEPTACLE (GFI)
10 – FTS1 FLOAT TEST SWITCH 1
11 – FTS2 FLOAT TEST SWITCH 2
12 – FTS3 FLOAT TEST SWITCH 3
13 – FTS4 FLOAT TEST SWITCH 4
14 – DUPLEXOR – (SEE NOTE BELOW)
15 – ELAPSE TIME METER 1
16 – ELAPSE TIME METER 2
17 – PL1 OVERTEMP 1
18 – PL2 OVERTEMP 2
19 – PL3 MOISTURE 1
20 – PL4 MOISTURE 2
21 – OVERTEMP 1 TEST BUTTON
22 – OVERTEMP 2 TEST BUTTON
23 – MOISTURE 1 TEST BUTTON
24 – MOISTURE 2 TEST BUTTON
25 – AL ALARM LIGHT (AC)
26 – AH ALARM HORN (DC)
27 – ASB ALARM SILENCE BUTTON
28 – GR GENERATOR RECEPTACLE
29 – FLOAT TERMINAL STRIP
30 – PUMP 1 POWER TERMINAL BLOCK
31 – PUMP 2 POWER TERMINAL BLOCK
32 – (2) JUNCTION BOXES
33 – LA LIGHTNING ARRESTOR
34 – SPARE CIRCUIT BREAKER
35 – ACB DC ALARM CIRCUIT BREAKER
36 – AL ALARM LIGHT (AC)
37 – ALARM HORN (AC)

NOTE:
BREAKERS, MODULAR CONTROL UNIT, RELAYS, MOUNTS ON DIN RAIL SECTION THROUGH INNER SAFETY DOOR

HOUR METERS (O.F.) RECEPTACLE MOUNTED ON INNER SAFETY DOOR

SEE TECHNICAL SPECIFICATION FOR DETAILS

PANEL BOX COMPONENT LAY-OUT

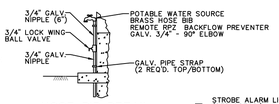

HOSE BIB DETAIL

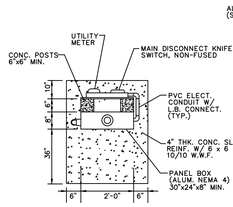

ELEVATION A

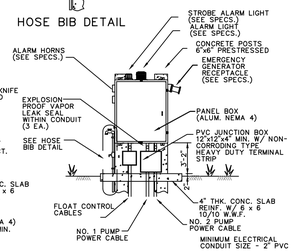

ELEVATION B

PHASE MONITOR:
A PHASE-LOSS/IMBALANCE/REVERSAL, UNDER VOLTAGE PROTECTION ASSEMBLY SHALL BE FURNISHED WITH ADJUSTABLE NOMINAL VOLTAGE SETTINGS AND THREE LINE VOLTAGE FUSES. THIS DEVICE SHALL DROP-OUT PUMPS IF ALL PHASES DROP BELOW 90% OR IF ONE PHASE DROPS BELOW 80-83% NOMINAL VOLTAGE. THIS DEVICE SHALL HAVE A 1/2 SECOND DROPOUT DELAY.

LIGHTNING ARRESTOR:
A LIGHTNING ARRESTOR SHALL BE SUPPLIED IN THE CONTROL PANEL AND CONNECTED TO EACH LINE OF THE INCOMING SIDE OF THE POWER INPUT TERMINALS. THE ARRESTOR SHALL PROTECT THE CONTROLS AGAINST DAMAGE DUE TO LIGHTNING STRIKES ON THE INCOMING POWER LINE.

STANDARD PUMP STATION (DUPLEX) PANEL BOX ELEVATION & COMPONENT LAY-OUT

PASCO COUNTY UTILITIES

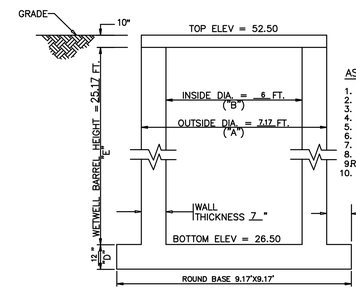

ASSUMPTIONS:

1. CONCRETE (REINFORCED) = 150 lbs./ft.^{3}
2. SATURATED SOIL = 120 lbs./ft.^{3}
3. WATER = 62.4 lbs./ft.^{3}
4. DIMENSIONS IN FEET
5. NO WATER IN WET WELL
6. NEGLECT TOP SLAB WEIGHT
7. NEGLECT SOIL FRICTION
8. ROUND WETWELL BARREL
9. RECTANGULAR WETWELL BASE
10. THE WATER TABLE IS AT TOP OF WET WELL BARREL

NOTE:
CONTRACTOR SHALL PREVENT FLOTATION DURING ALL PHASES OF CONSTRUCTION.

(1) BARREL WEIGHT = $[(A)^2 - (B)^2]\ (\pi/4)(E)(150) = [\ (\ 7.17\ )^2 - (\ 6\ )^2]\ (\pi/4)(\ 25.17\ )(150)$ = 45,692 lb.

(2) BOTTOM SLAB WEIGHT = $\pi\ ((9.17)^2/4)\ (\ 1'\ )\ (150)$ = 9,906 lb.

(3) SOIL WEIGHT = $[\ (9.17)^2 - (7.17)^2]\ \pi/4\ (\ 25.17\ )\ (\ 120 - 62.4\ )$ = 37,212 lb.

(4) TOTAL WEIGHT = (1) + (2) + (3) = (45,692) + (9,906) + (37,212) = 92,810 lb.

(5) WEIGHT OF WATER DISPLACED =
$[\ (\ 7.17\ )^2(\pi/4)(\ 25.17\ ) + (\ 9.17\ )^2\ (\pi/4)\ (\ 1'\ )\ ]\ (62.4)$ = 67,537 lb.

SAFETY FACTOR = $\frac{\text{TOTAL WEIGHT}}{\text{WT. OF WATER DISPLACED}} = \frac{92{,}810\ \text{lb.}}{67{,}537\ \text{lb.}} = 1.37$

FOR SAFETY FACTOR OF 1.75 ADD 6 CY CONCRETE BALLAST = 92,810 + 6(27)(150) = 117,110 lb. $\frac{117{,}110}{67{,}537} = 1.75$

FLOTATION CALCULATIONS – CONCRETE WET WELL

NTS

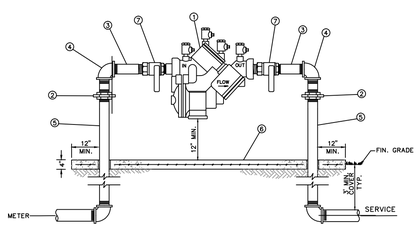

MATERIALS		
ITEM	QUANT.	DESCRIPTION
1	1	BACKFLOW PREVENTER ASSEMBLY, REDUCED PRESSURE ZONE
2	2	UNIONS - GALV.
3	2	NIPPLES - BRASS
4	2	ELBOWS - GALV. 90°
5	2	RISER - GALV.
6	*	CONCRETE SLAB
7	2	BALL VALVES - BRASS OR S.S. (PROVIDED WITH BFP ASS'Y)

NOTE:
- FIELD ADJUST AND CUT ITEM 5 TO THE PROPER LENGTH.
- MINIMUM CLEARANCE OF 24" TO BE MAINTAINED AROUND DEVICE FOR TESTING.
- ENTIRE ASSEMBLY TO BE PAINTED SAFETY BLUE.
- CONCRETE SLAB TO EXTEND 12" MIN. AROUND ENTIRE DEVICE.
- DEVICE MUST BE LISTED WITH THE UNIVERSITY OF SOUTHERN CALIFORNIA FOUNDATION FOR CROSS CONNECTION CONTROL AND HYDRAULIC RESEARCH.

REDUCED PRESSURE BACKFLOW PREVENTER DETAIL

SINGLE SERVICE: 3/4", 1-1/2", 2"

NTS

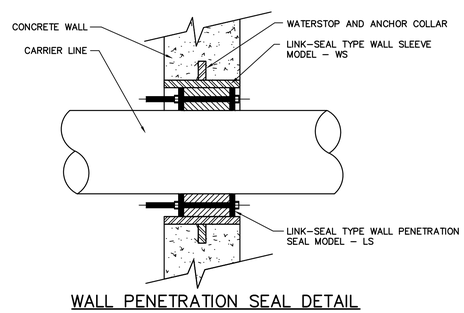

WALL PENETRATION SEAL DETAIL

NTS

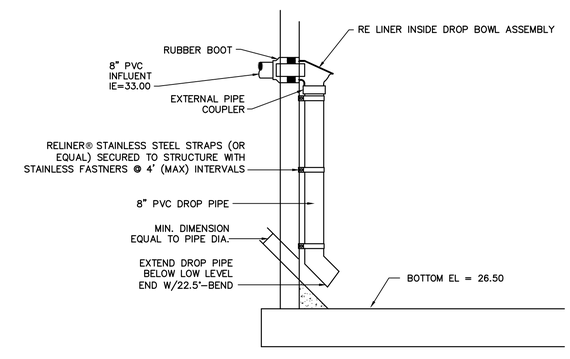

INSIDE DROP PIPE DETAIL

NTS

PAUL E. SKIDMORE
LICENSE NO. 39631
STATE OF FLORIDA
PROFESSIONAL ENGINEER

JOB NO.	506-100C
SCALE	213
DATE	5-1-2015
DESIGNED	RAH
DRAWN	RAH
REVIEWED	PES

NO.	DATE	REVISIONS	APP'D

DESIGNED FOR:
ASTURIA COMMUNITY DEVELOPMENT DISTRICT
605 PALDUCCI CLUB DRIVE, ST. AUGUSTINE, FLORIDA 32095
PHONE: (904) 810-0500 FAX: (904) 810-0525

PROJECT NAME: Asturia | **PROMENADE PARKWAY**

SHEET NAME: **SANITARY SEWER PUMP STATION PLAN AND DETAILS (2)**

FLORIDA DESIGN CONSULTANTS, INC.
THINK IT. ACHIEVE IT.
3030 STARKEY BOULEVARD, NEW PORT RICHEY, FLORIDA 34655
PHONE: (800) 532 - 1047 FAX: (727) 848 - 3648 WWW.FLDESIGN.COM C.A. NO. 7421

©Copyright 2015 Florida Design Consultants, Inc. Drawings and concepts may not be used or reproduced without written permission.

k:\213\Proj\Data\ConstDocs\Plans\Promenade Parkway\213_PROMENADE-PLS2.DWG – May 27, 2015 @ 12:13pm – cayrjake

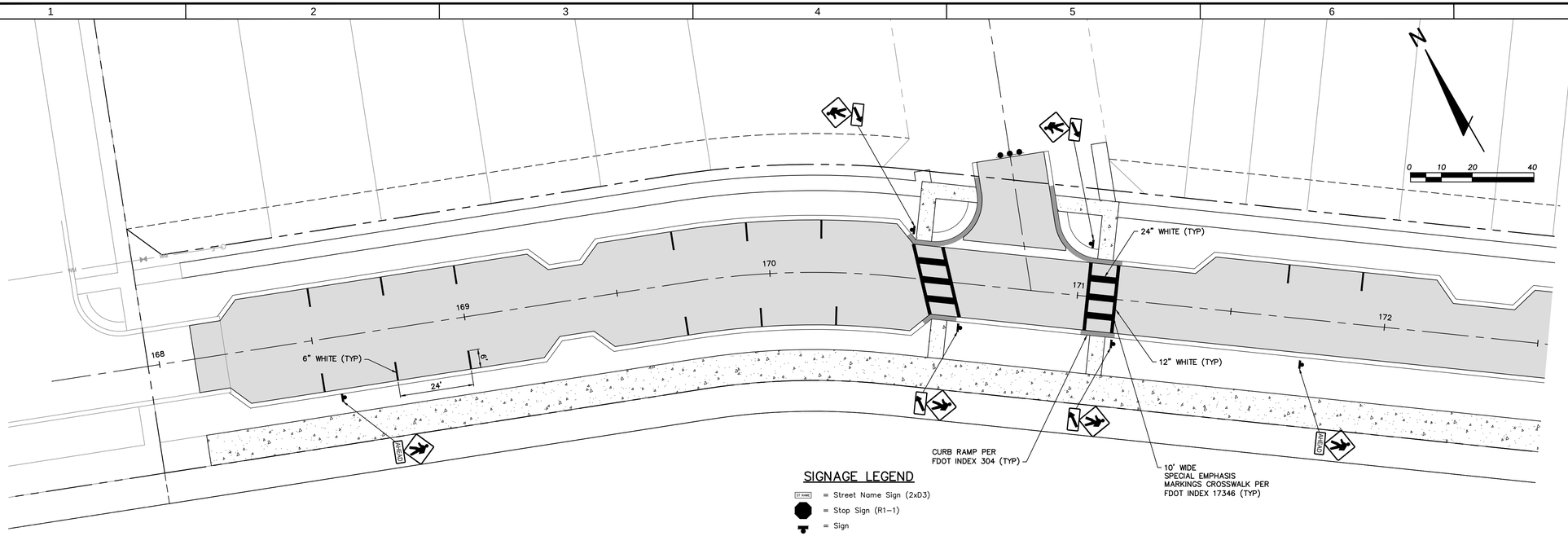

SIGNAGE LEGEND

- ST NAME = Street Name Sign (2xD3)
- = Stop Sign (R1-1)
- = Sign
- = Type III Barricade
- SPEED LIMIT 25 = Speed Limit Sign (R2-1)
- = Crosswalk Warning Sign (W11-2)
- AHEAD = Ahead Sign (W16-9P)
- = Downward Diagonal Arrow (W16-7P)

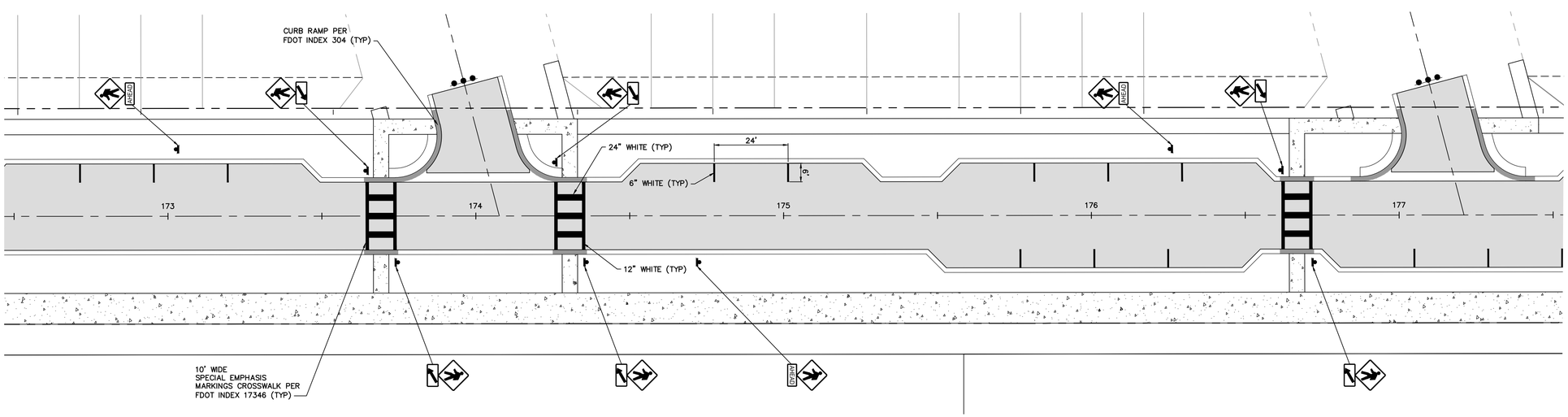

PAUL E. SKIDMORE
LICENSE
NO. 39631
STATE OF
FLORIDA
PROFESSIONAL ENGINEER

JOB NO.	SHEET	DATE	DESIGNED	DRAWN	CHECKED
506-100C	213	5-1-2015	RAH	RAH	PES

NO.	DATE	REVISIONS	APP'D

DESIGNED FOR
ASTURIA COMMUNITY DEVELOPMENT DISTRICT
605 PALMONA CLUB DRIVE, ST. AUGUSTINE, FLORIDA 32095
PHONE: (904) 810-0500 - FAX: (904) 810-0525

PROJECT NAME: Asturia

SHEET NAME: **PROMENADE PARKWAY**

FLORIDA DESIGN CONSULTANTS, INC.
THINK IT. ACHIEVE IT.
3030 STARKEY BOULEVARD, NEW PORT RICHEY, FLORIDA 34655
PHONE: (800) 532 - 1047 FAX: (727) 848 - 3648 WWW.FLDESIGN.COM C.A. NO. 7421

© Copyright 2015 Florida Design Consultants, Inc. Drawings and concepts may not be used or reproduced without written permission.

K:\213\ProjData\ConstDocs\Plans\Promenade Parkway\213_PROMENADE-PSPM.DWG - May 29, 2015 @ 7:04am - mpriola

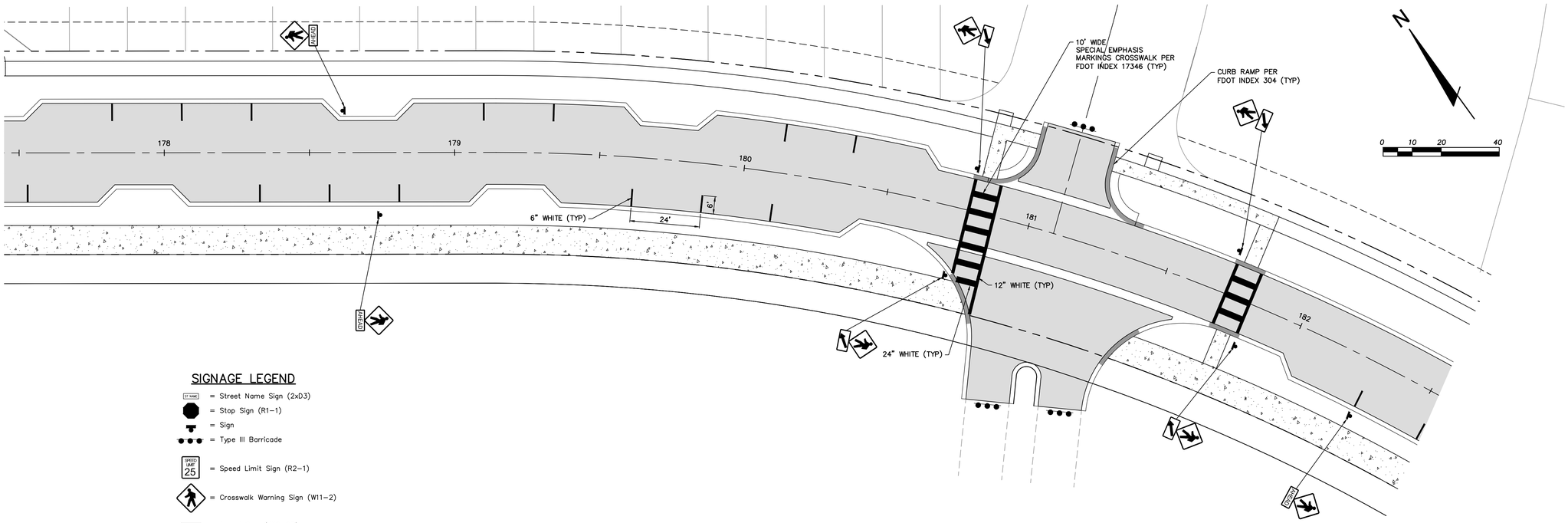

SIGNAGE LEGEND

- = Street Name Sign (2xD3)
- = Stop Sign (R1-1)
- = Sign
- = Type III Barricade
- = Speed Limit Sign (R2-1)
- = Crosswalk Warning Sign (W11-2)
- = Ahead Sign (W16-9P)
- = Downward Diagonal Arrow (W16-7P)

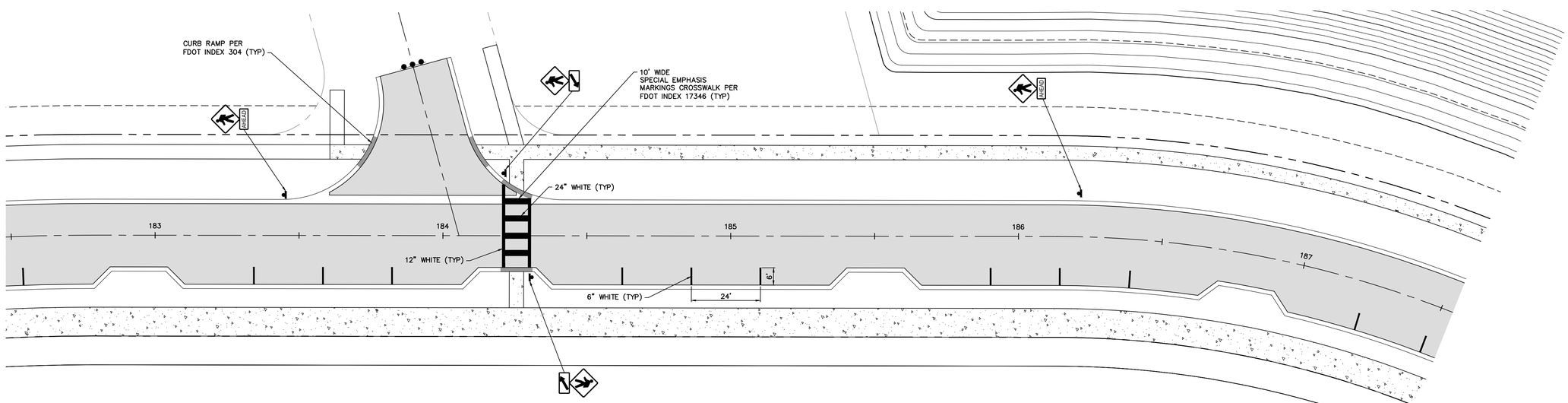

PAUL E. SKIDMORE
LICENSE
NO. 39631
STATE OF FLORIDA
PROFESSIONAL ENGINEER

JOB NO.	SHEET	DATE	DRAWN	DESIGNED	QC
506-100C	213	5-1-2015	RAH	PES	

NO.	DATE	REVISIONS	APP'D

DESIGNED FOR
ASTURIA COMMUNITY DEVELOPMENT DISTRICT
605 PALENCIA CLUB DRIVE, ST. AUGUSTINE, FLORIDA 32095
PHONE: (904) 810-0500 - FAX: (904) 810-0505

PROJECT NAME: Asturia

SHEET NAME: **PROMENADE PARKWAY**

FLORIDA DESIGN CONSULTANTS, INC.
THINK IT. ACHIEVE IT.
3030 STARKEY BOULEVARD, NEW PORT RICHEY, FLORIDA 34655
PHONE: (800) 532 - 1047 FAX: (727) 848 - 3648 WWW.FLDESIGN.COM C.A. NO. 7421

SHEET 30 OF 38

© Copyright: 2015 Florida Design Consultants, Inc. Drawings and concepts may not be used or reproduced without written permission.

K:\213\ProData\ConstDocs\Plans\Promenade Parkway\213_PROMENADE-PSP42.DWG - May 29, 2015 @ 7:04am - stynlee

SIGNAGE LEGEND

- = Street Name Sign (2xD3)
- = Stop Sign (R1–1)
- = Sign
- = Type III Barricade
- = Speed Limit Sign (R2–1)
- = Crosswalk Warning Sign (W11–2)
- = Ahead Sign (W16–9P)
- = Downward Diagonal Arrow (W16–7P)

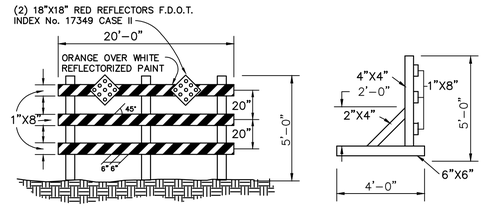

TYPE III BARRICADE DETAIL

NOTE:

ALL PROMENADE PARKWAY SIGNAGE SHALL BE DECORATIVE, AS DIRECTED BY DEVELOPER.

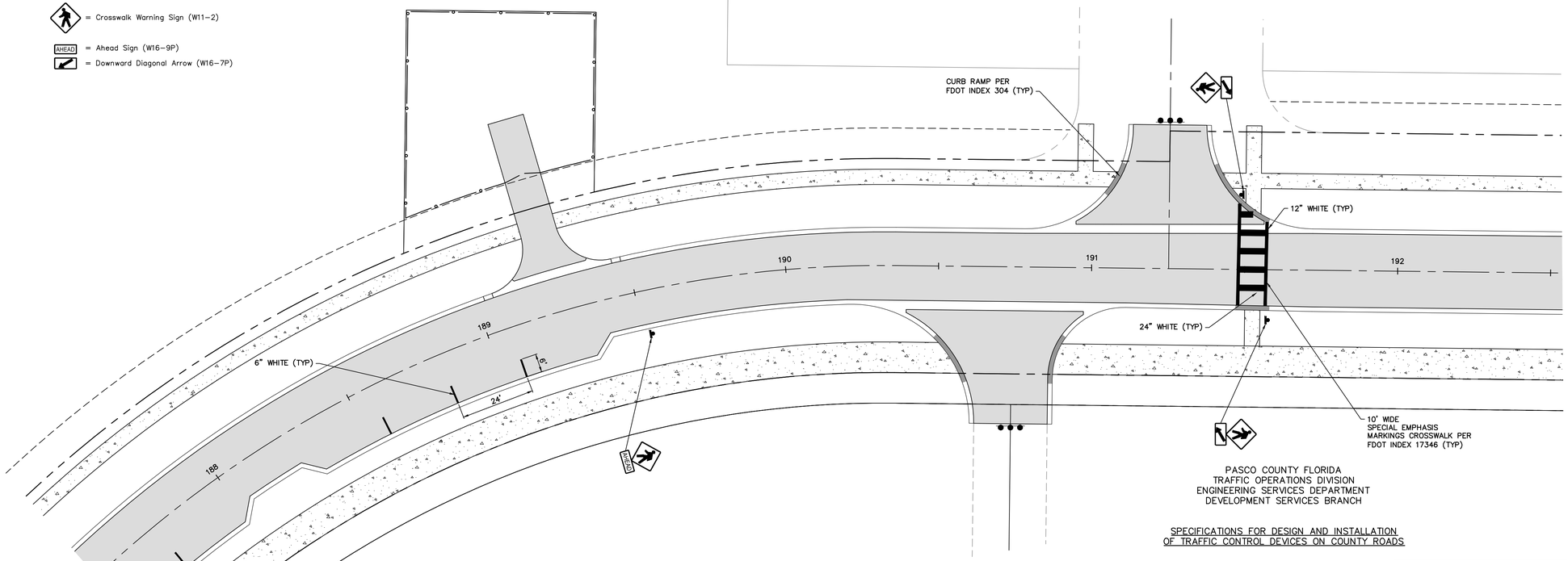

PASCO COUNTY FLORIDA
TRAFFIC OPERATIONS DIVISION
ENGINEERING SERVICES DEPARTMENT
DEVELOPMENT SERVICES BRANCH

SPECIFICATIONS FOR DESIGN AND INSTALLATION OF TRAFFIC CONTROL DEVICES ON COUNTY ROADS

WARNING
REMOVAL OF, OR DEFACING ANY TRAFFIC CONTROL DEVICE IS PUNISHABLE BY FINE AND/OR IMPRISONMENT REPORT DAMAGE BY CALLING (813) 847–2411
INSTALLED
J F M A M J J A S O N D
10's 20's 30's – 1 2 3 4 5 6 7 8 9
12 13 14 15 16 17 18 19

1. Purpose:
These specifications have been developed to provide developers with a uniform system for installation of traffic control devices on the County road system. A uniform system provides for reduced maintenance costs and a high standard of visibility for drivers. All required traffic control devices shall be installed by the developer of the project.

2. Florida State Statute 316.0745:
2.1) Any and all traffic control devices installed on the County road system shall conform to Florida State Statute 316.0745, Uniform signals and devices.
2.2) This statute requires that all devices conform to Florida Department of Transportation (FDOT) Specifications. The FDOT has adopted the Federal Manual on Uniform Traffic Control Devices as the standards to be used in the State of Florida.

3. Pavement Markings
3.1) All pavement markings shall be thermoplastic; raised pavement makers shall be class "B".
3.2) Pavement markings and raised pavement markers shall be installed on all roads classified other than residential with an ADT greater than 500 vehicles or if other conditions exist that require pavement markings, (see MUTCD section 3B–1).

4. Traffic Control Signs:
4.1) All sign blanks shall be of a type currently certified by the FDOT for use in the State of Florida.
4.2) All sign faces shall be High Intensity grade and of a type currently certified by the FDOT for use in the State of Florida.
4.3) All signs shall be no less than the standard size as specified by the Federal Manual on Uniform Traffic Control Devices. No minimum size signing shall be accepted. Larger signsshall be used when required by design speed etc.
4.4) Street name signs shall be 9" on collector and arterial roads and all signs shall have 6" series B letters. All street name signs on private roads shall be standard D3 street name signs with the colors reversed. White background with green letters and border. At intersections with county maintained roads, the county maintained road shall be green background with white letters and border.Street name sign brackets for 6" signs 30" long or less, or 9" signs 24" long or less, shall have a Sinchbladeor cross. All other street name signs shall be mounted with brackets with a 12 inch blade or8 inchcross. All street name sign brackets shall be supplied with bolts, set screws will not be accepted.
4.5) On roads to be maintained by Pasco County, all signs other than street names shall be datecoded with a yellow reflective label affixed to the back of the sign. It will be punched to show month, day, and year of installation (See Sample Label). Alternate label designs providing the date code information may be used if a sample is submitted and approved by Pasco County prior to installation.
4.6) All post systems, mounting brackets and hardware shall be of a type currently in use by the Pasco County Public Works Department and currently certified by the Florida Department of Transportation for use in the state of Florida. Alternative systems etc. shall only be used if approved by the County Engineer.

5. Certification of Materials:
5.1) All traffic control devices and materials shall be on the current FDOT APPROVED PRODUCTS LIST. Proof of certification is required for all traffic control devices
5.2) A Traffic Control Devices Submittal Data Form shall be submitted for approval prior to installation of any traffic control devices. No traffic control device shall be installed until the certification submittal has been approved by the Traffic Operations Division. These forms are available from the Traffic Operations Division. Copies of the approved Traffic Control Devices Submittal Data Form shall be sent to the contractor and the Engineering Inspections Division.

6. Traffic Control Devices Plan:
6.1) All pavement markings shall be thermoplastic; raised pavement makers shall be class "B".
6.2) Pavement markings and raised pavement markers shall be installed on all roads classified other than residential with an ADT greater than 500 vehicles or if other conditions exist that require pavement markings, (see MUTCD section 3B–1).

7. Cost Estimate: An engineer's cost estimate shall be required for all proposed traffic control devices. The estimates shall be provided in conjunction with the Traffic Control Devices Submittal Data Form. (See Section 5.2)

8. Inspection and acceptance:
8.1) Upon completion of the installation of the traffic control devices, the contractor shall call the Engineering Inspections Division for an inspection at (813) 847–8154.
8.2) The inspection shall be made by the Engineering Inspections Division within 48 hours (two working days) of the request.
8.3) An inspection report shall be made by the Engineering Inspections Division. Copies of the report shall be sent to the Engineer and the Developer.
8.4) No roadway shall be open to the Public until all traffic control devices have been inspected and accepted by Pasco County.

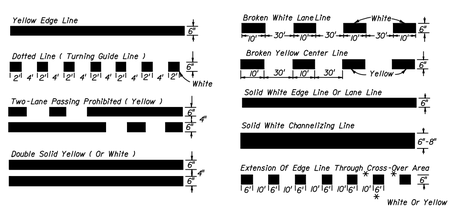

TYPES OF PERMANENT LONGITUDINAL LINES

BASIC COLOR RULE

White lines separate flows in the same direction.
Yellow lines separate flows in the opposite direction.
Yellow dotted lines may be used in special cases.

PAUL E. SKIDMORE
LICENSE
NO. 39631
STATE OF FLORIDA
PROFESSIONAL ENGINEER

JOB NO.	SHEET	DATE	DRAWN	CHECKED	D.C.
506-100C	213	5-1-2015	RAH	RAH	PES

NO.	DATE	REVISIONS	APP'D

DESIGNED FOR
ASTURIA COMMUNITY DEVELOPMENT DISTRICT
605 PALMERO CLUB DRIVE, ST. AUGUSTINE, FLORIDA 32095
PHONE: (904) 810-0500 FAX: (904) 810-0525

PROJECT NAME: Asturia

SHEET NAME: **PROMENADE PARKWAY**

FLORIDA DESIGN CONSULTANTS, INC.
THINK IT. ACHIEVE IT.
3030 STARKEY BOULEVARD, NEW PORT RICHEY, FLORIDA 34655
PHONE: (800) 532 - 1047 FAX: (727) 848 - 3648 WWW.FLDESIGN.COM C.A. NO. 7421

©Copyright 2015 Florida Design Consultants, Inc. Drawings and concepts may not be used or reproduced without written permission.

K:\213\Eng\Data\ConstDocs\Plans\Promenade Parkway\213_PROMENADE-PSPM3.DWG – May 29, 2015 @ 7:05am – rayrake

MAINTENANCE OF TRAFFIC GENERAL NOTES:

1. THE CONTRACTOR IS RESPONSIBLE FOR PREPARING FULLY DETAILED MAINTENANCE-OF-TRAFFIC PLANS TO BE UTILIZED FOR TRAFFIC CONTROL. THE PREPARATION OF THESE PLANS MUST CONFORM TO ALL THE REQUIREMENTS IDENTIFIED ON THIS SHEET. THESE PLANS MUST BE PREPARED AND SIGNED & SEALED BY A FLORIDA REGISTERED ENGINEER WHO HAS THE NECESSARY TRAINING AND EXPERIENCE. THE ENGINEER WHO WILL PREPARE THE PLANS AND THE CONTRACTOR'S PERSONNEL WHO WILL ADMINISTER THE PLANS MUST MEET THE FDOT TRAINING REQUIREMENTS (FDOT TRAINING PROCEDURE #625-010-010-A). PAYMENT IS INCLUDED IN PAY ITEM FOR MAINTENANCE OF TRAFFIC (LUMP SUM).

2. THE CONTRACTOR SHALL ADHERE TO THE REQUIREMENTS SET FORTH IN "THE MANUAL ON UNIFORM TRAFFIC CONTROL DEVICES" (MUTCD) LATEST EDITION, SERIES 600 OF THE FDOT "ROADWAY AND TRAFFIC DESIGN STANDARDS" (LATEST EDITION) AND SECTION 102 OF THE STANDARD SPECIFICATIONS AT ALL TIMES.

3. EXISTING REGULATORY SIGNS WITHIN THE PROJECT LIMITS SHALL BE MAINTAINED AT ALL TIMES.

4. ALL EXISTING PAVEMENT MARKINGS, WHICH CONFLICT WITH THE TRAFFIC CONTROL PLAN DURING A CONSTRUCTION PHASE SHALL BE REMOVED OR TEMPORARILY RELOCATED AS NECESSARY PRIOR TO THE DIVERSION OF TRAFFIC AND THE COMMENCEMENT OF CONSTRUCTION. THE REMOVAL OF EXISTING PAVEMENT MARKINGS THAT ARE TO BE PERMANENTLY REMOVED MUST BE COMPLETED BY MILLING AND RESURFACING.

5. USE FDOT INDEXES 11200 AND 11860 FOR SIGN SUPPORT REQUIREMENTS. THE CONTRACTOR SHALL USE THE MUTCD TO DETERMINE THE APPROPRIATE COLOR FOR CONSTRUCTION SIGNS.

6. THE FIRST TWO (2) SIGNS OF THE ADVANCE SIGNING INSTALLATION SHALL HAVE 18"x18" (MIN.) ORANGE FLAGS AND HIGH INTENSITY TYPE "B" FLASHING LIGHTS ATTACHED AND OPERATING AT ALL TIMES. THE TYPE B FLASHING LIGHTS SHALL BE PLACED ON THE SIDE OF TRAFFIC.

7. MINIMUM LANE WIDTHS SHALL BE NO LESS THAN EXISTING LANE WIDTHS OR THE WIDTHS AS FOLLOWS (WHICH EVER IS GREATER): S.R. 54 – 11 FT.

8. TRAFFIC CONDITIONS, ACCIDENTS AND OTHER UNFORESEEN EMERGENCY CONDITIONS MAY REQUIRE THE CONTROLLING AGENCY TO RESTRICT OR REMOVE LANE CLOSURES OR CHANNELIZATIONS. THE CONTRACTOR SHALL RESPOND AND PROVIDE ADJUSTMENTS AS DIRECTED WITHOUT DELAY UNDER THESE CONDITIONS. THE CONTRACTOR SHALL ALSO RESPOND WITHIN 30 MINUTES UPON NOTIFICATION BY THE CONTROLLING AGENCY TO ANY REQUESTS FOR CORRECTION, IMPROVEMENT OR MODIFICATION TO THE TRAFFIC CONTROL PLAN AND/OR DEVICES.

9. BARRICADES, CONES AND DRUMS SHALL NOT BE INTERMIXED IN LATERAL TRANSITIONS.

10. THE REMOVAL AND REPLACEMENT OF ANY TEMPORARY STRIPING OR RPM'S SHALL BE DONE WITH THE CLOSURE OF THE AFFECTED LANE AND UTILIZE FDOT INDEX 600 SERIES FOR TRAFFIC CONTROL.

11. TWO-WAY ACCESS (INGRESS/EGRESS) TO ALL PROPERTIES SHALL BE MAINTAINED AT ALL TIMES.

12. ALL WORK MUST CONFORM TO FDOT INDEX NO. 600 INCLUDING DROP OFF REQUIREMENTS, AND APPLICABLE FDOT INDEXES.

13. EXISTING DRAINAGE SYSTEMS MUST BE MAINTAINED UNTIL THE NEW SYSTEM IS CONSTRUCTED AND FUNCTIONAL. TEMPORARY SWALES, CULVERTS, PIPES, PLUMBING, ETC. ARE TO BE CONSTRUCTED WITHIN THE RIGHT OF WAY AS REQUIRED. REFER TO THE FDOT DRAINAGE HANDBOOK FOR TEMPORARY DRAINAGE DESIGN. PAYMENT IS INCLUDED UNDER PAY ITEM FOR MAINTENANCE OF TRAFFIC (LUMP SUM).

14. TEMPORARY PAVEMENT MARKINGS SHALL INCLUDE LANE LINES, EDGE LINES, STORAGE AREAS, STOP BARS,AND MESSAGES TO FULLY DEFINE TRAFFIC MOVEMENT. ALL TEMPORARY MARKINGS SHALL CONFORM TO THE REQUIREMENTS OF SECTION 102 OF THE FDOT STANDARD SPECIFICATIONS. ALL MARKINGS SHALL BE REFLECTORIZED. THESE TEMPORARY MARKINGS SHALL BE PROVIDED AS SOON AS POSSIBLE AT THE END OF EACH DAYS PAVING OPERATIONS AND PRIOR TO OPENING TO TRAFFIC.

15. UNLESS OTHERWISE SPECIFIED, THE CROSS SLOPE FOR ALL TEMPORARY PAVEMENT WHICH ABUTS EXISTING OR NEW PAVEMENT SHALL MATCH THE CROSS SLOPE OF THE ABUTTING PAVEMENT. CROSS SLOPE TRANSITIONS SHALL CONFORM TO STANDARD INDEX 511. THE CONTRACTOR SHALL ENSURE ADEQUATE DRAINAGE OF ALL TEMPORARY PAVEMENT.

16. TEMPORARY PAVEMENT SHALL BE CONSTRUCTED IN ACCORDANCE WITH THE FDOT STANDARD SPECIFICATIONS FOR "ROAD AND BRIDGE CONSTRUCTION", SECTION 102-2.1 AND 102-4 AND STANDARD INDEX 514 AND 515. TEMPORARY ROADWAYS AND WIDENING SHALL BE ASPHALT PAVED. THE PRICE AND PAYMENT FOR ALL MATERIALS, INSTALLATION, MODIFICATIONS, REMOVAL OR RESTORATION FOR TEMPORARY PAVEMENT ARE INCLUDED UNDER PAY ITEM FOR MAINTENANCE OF TRAFFIC (LUMP SUM).

17. MATERIALS AND EQUIPMENT WHICH ARE STORED AND/OR STOCKPILED SHALL BE KEPT OUTSIDE OF THE CLEAR ZONE AS DETERMINED BY FDOT INDEX 600 DURING ALL PHASES OF CONSTRUCTION.

18. ALL WORK WITHIN THE RIGHT-OF-WAY SHALL TAKE PLACE BETWEEN 9:00 P.M. AND 5:00 A.M. ON SUNDAY THROUGH THURSDAY, UNLESS OTHERWISE AUTHORIZED BY THE DEPARTMENT AT TIME OF CONSTRUCTION. THE CONTRACTOR SHALL NOTIFY ALL LOCAL LAW ENFORCEMENT AGENCIES A MINIMUM OF 48 HOURS PRIOR TO A LANE CLOSURE THAT WILL EXCEED ONE (1) HOUR. ONLY ONE LANE IN EACH DIRECTION MAY BE CLOSED AT ANY ONE TIME.

19. EXISTING LEFT TURN LANE MOVEMENTS ARE TO BE MAINTAINED AT ALL INTERSECTIONS DURING ALL PHASES OF CONSTRUCTION.

20. ANY WORK REQUIRING LANE CLOSURES SHALL BE COMPLETED AS SOON AS POSSIBLE AND THE LANES REOPENED TO TRAFFIC WITH PROPER PAVEMENT MARKINGS AND WARNING DEVICES IN PLACE.

21. A DISCUSSION OF LANE CLOSURE OPERATIONS WILL BE MADE PART OF ALL PRECONSTRUCTION AND CONSTRUCTION CONFERENCES. THE CONTRACTOR WILL BE REQUIRED TO SUBMIT A WRITTEN PLAN WHICH DETAILS EACH ACTIVITY INVOLVED IN THE LANE CLOSURE. THE PLAN SHALL INCLUDE BACK-UP PLANS FOR ACTIVITIES CRITICAL TO REOPENING THE LANES TO TRAFFIC, AND THE BACK-UP FOR ALL SUBCONTRACTOR OPERATIONS AS WELL AS THE PRIME CONTRACTORS.

22. NO LANE CLOSURE WILL BE ALLOWED WITHOUT ABSOLUTE ASSURANCE THAT THE PRIME AND SUBCONTRACTORS HAVE PLANNED THE OPERATIONS TO ACHIEVE REOPENING ACCORDING TO THESE REQUIREMENTS AND TO THE SATISFACTION OF THE CONTROLLING AGENCY.

23. AT THE DISCRETION OF THE CONTROLLING AGENCY, IF A LANE CLOSURE CAUSES EXTENDED CONGESTION OR DELAY, THE CONTRACTOR SHALL REOPEN THE CLOSED LANE(S) UNTIL SUCH TIME AS TRAFFIC FLOW HAS RETURNED TO AN ACCEPTABLE LEVEL.

24. WARNING LIGHTS:
WARNING LIGHTS SHALL BE IN ACCORDANCE WITH SECTION 6E-5 OF THE MUTCD: TYPE "B" HIGH INTENSITY FLASHING WARNING LIGHTS SHALL BE MOUNTED ON THE FIRST AND SECOND ADVANCE WARNING SIGNS WHERE TWO OR MORE SIGNS ARE USED. THIS APPLIES TO ANY WORK ZONE.

TYPE "C" STEADY-BURN LIGHTS ARE TO BE MOUNTED ON BARRICADES, DRUMS, VERTICAL PANELS AND USED IN COMBINATION WITH THOSE DEVICES TO DELINEATE THE TRAVEL WAY ON LANE CLOSURES, LANE CHANGES, DETOUR CURVES AND OTHER SIMILAR CONDITIONS. STEADY-BURN LIGHTS ARE INTENDED TO BE PLACED IN A LINE TO DELINEATE THE TRAVELED WAY THOUGH AND AROUND OBSTRUCTIONS IN THE TRANSITION, BUFFER, WORK AND TERMINATION AREAS OF THE TRAFFIC CONTROL ZONE. THEIR INTENDED PURPOSE IS NOT FOR WARNING DRIVERS THAT THEY ARE APPROACHING OR PROCEEDING THROUGH A HAZARDOUS AREA.

25. REFLECTORIZED RAISED PAVEMENT MARKERS:
TEMPORARY RPM'S SHALL BE INSTALLED ON THE LANE LINES OF ALL TRANSITIONS, CROSSOVERS AND DETOURS WITHIN THE WORK ZONE. THE SPACING SHALL BE 40 FEET ON TANGENT SECTIONS AND 20 FEET ON TRANSITIONS, CURVES AND CROSSOVERS. IT SHALL BE THE CONTRACTOR'S RESPONSIBILITY TO REPLACE MISSING OR DAMAGED RPM'S ON A DAILY BASIS. RPM'S MAY BE UTILIZED IN LIEU OF TEMPORARY TAPE OR PAINT IN ACCORDANCE WITH FDOT INDEX 600 SHEET 10 OF 10. THE USE OF RPM'S DOES NOT ELIMINATE REQUIREMENTS OF REMOVING ANY CONFLICTING PAVEMENT MARKINGS. THE COST SHALL BE INCLUDED IN THE PAY ITEM FOR MAINTENANCE OF TRAFFIC (LUMP SUM).

26. ALL EXISTING PAVEMENT MARKINGS, OUTSIDE THE LIMITS OF CONSTRUCTION, THAT ARE ALTERED OR DAMAGED AS DETERMINED BY THE CONTROLLING AGENCY, SHALL BE REPLACED UPON COMPLETION OF THE PROJECT. ALL COSTS FOR REMOVAL AND REPLACEMENT SHALL BE INCLUDED IN THE PAY ITEM FOR MAINTENANCE OF TRAFFIC (LUMP SUM).

27. SIGNING FOR THE CONSTRUCTION PHASE FOR WHICH IT IS REQUIRED SHALL BE ERECTED AND COVERED UNTIL THE PHASE FOR WHICH IT IS REQUIRED IS OPENED TO TRAFFIC. ALL CONFLICTING SIGNS SHALL BE COVERED OR REMOVED. EXISTING SIGNS SHALL BE MAINTAINED AND/OR RELOCATED DURING CONSTRUCTION UNTIL PROPOSED SIGNS ARE INSTALLED. COST FOR MAINTENANCE OR RELOCATION OF EXISTING SIGNS TO BE INCLUDED IN PAY ITEM MAINTENANCE OF TRAFFIC (LUMP SUM).

28. THE CONTRACTOR SHALL INSTALL EROSION CONTROL MEASURES IN ACCORDANCE WITH THE EROSION CONTROL PLANS PRIOR TO THE BEGINNING OF CONSTRUCTION AND SHALL MAINTAIN DRAINAGE DURING CONSTRUCTION OPERATIONS TO ENSURE SAFE VEHICULAR OPERATIONS AS WELL AS TO PROHIBIT ANY UNDUE IMPACT ON OFF-SITE DRAINAGE OR ENVIRONMENTAL CONCERNS.

29. EXISTING SIGNS THAT CONFLICT WITH CONSTRUCTION SIGNS SHALL BE REMOVED OR COVERED DURING CONSTRUCTION. ALL EXISTING SIGNS THAT ARE REMOVED SHALL BE STOCKPILED IN A SECURE PLACE AND REINSTALLED AFTER CONSTRUCTION UNLESS SHOWN TO BE REMOVED IN THE SIGNING AND MARKING PLANS. THE CONTRACTOR IS RESPONSIBLE FOR ANY DAMAGE CAUSED TO EXISTING SIGNS.

30. TRAFFIC SHALL BE MAINTAINED ON PAVED SURFACES AT ALL TIMES.

31. CROSS DRAIN CONSTRUCTION UNDER EXISTING ROADWAYS WILL REQUIRE STAGE CONSTRUCTION UTILIZING FLAGMEN TRAFFIC CONTROL PER FDOT INDEX 621 MAINTAINING ONE TRAVEL LANE. LANE CLOSURES ARE RESTRICTED TO OFF-PEAK TRAFFIC TIMES (SEE NOTE 18 FOR LANE CLOSURE RESTRICTIONS).

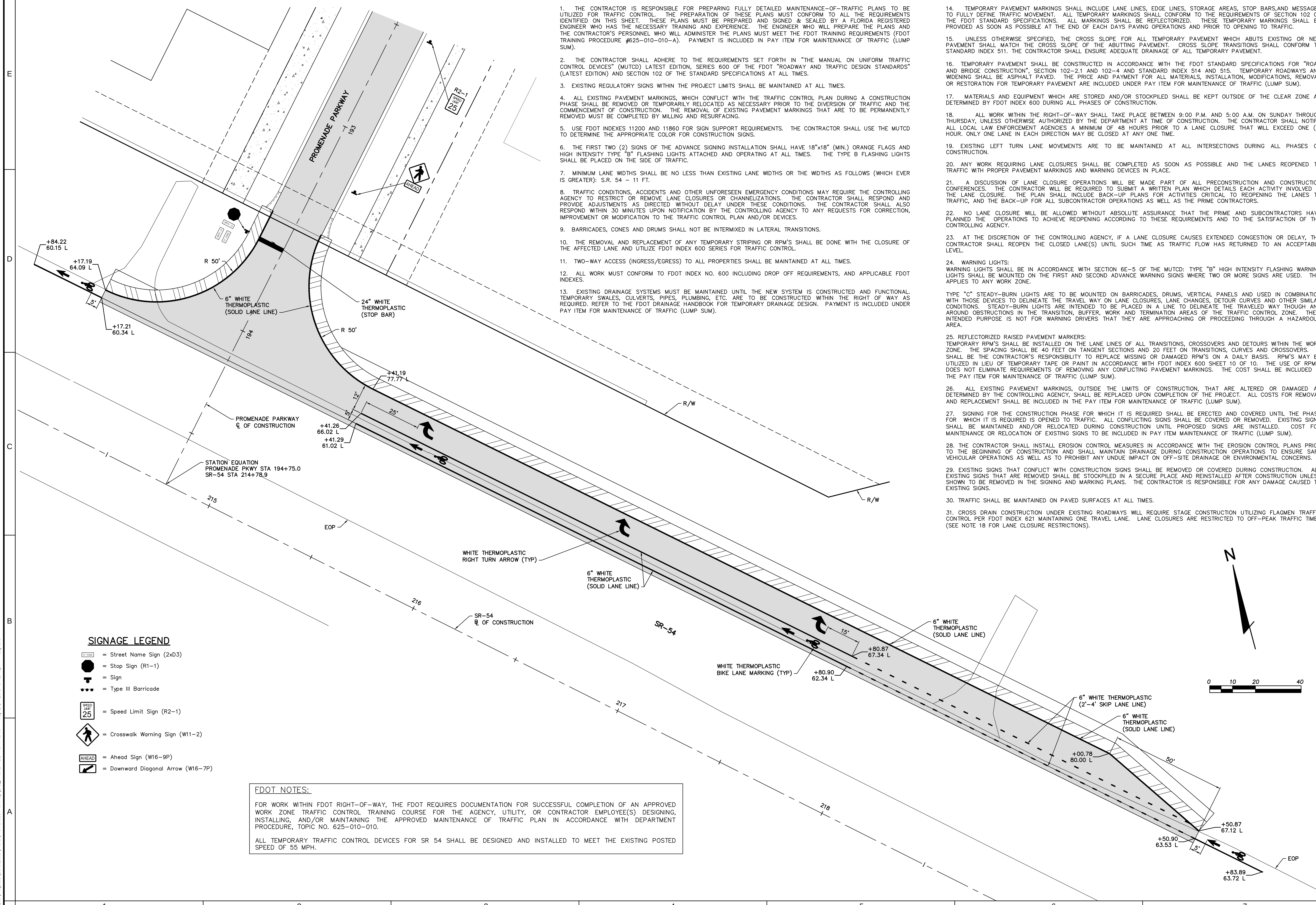

SIGNAGE LEGEND

- = Street Name Sign (2xD3)
- = Stop Sign (R1-1)
- = Sign
- = Type III Barricade
- = Speed Limit Sign (R2-1)
- = Crosswalk Warning Sign (W11-2)
- = Ahead Sign (W16-9P)
- = Downward Diagonal Arrow (W16-7P)

FDOT NOTES:

FOR WORK WITHIN FDOT RIGHT-OF-WAY, THE FDOT REQUIRES DOCUMENTATION FOR SUCCESSFUL COMPLETION OF AN APPROVED WORK ZONE TRAFFIC CONTROL TRAINING COURSE FOR THE AGENCY, UTILITY, OR CONTRACTOR EMPLOYEE(S) DESIGNING, INSTALLING, AND/OR MAINTAINING THE APPROVED MAINTENANCE OF TRAFFIC PLAN IN ACCORDANCE WITH DEPARTMENT PROCEDURE, TOPIC NO. 625-010-010.

ALL TEMPORARY TRAFFIC CONTROL DEVICES FOR SR 54 SHALL BE DESIGNED AND INSTALLED TO MEET THE EXISTING POSTED SPEED OF 55 MPH.

PAUL E. SKIDMORE LICENSE NO. 39631 STATE OF FLORIDA PROFESSIONAL ENGINEER

JOB NO. 506-100C | EPN 213 | DATE 5-1-2015 | DESIGNED RAH | DRAWN RAH | CHECKED PES | Q.C.

REVISIONS | NO. | DATE | APP'D BY

DESIGNED FOR ASTURIA COMMUNITY DEVELOPMENT DISTRICT
605 PALENCIA CLUB DRIVE, ST. AUGUSTINE, FLORIDA 32095
PHONE: (904) 810-0500 - FAX: (904) 810-0525

PROJECT NAME Asturia | PROMENADE PARKWAY

SHEET NAME SIGNAGE AND PAVEMENT MARKING PLAN (4)

FLORIDA DESIGN CONSULTANTS, INC.
THINK IT. ACHIEVE IT.
3030 STARKEY BOULEVARD, NEW PORT RICHEY, FLORIDA 34655
PHONE: (800) 532 - 1047 FAX: (727) 848 - 3648 WWW.FLDESIGN.COM C.A. NO. 7421

©Copyright 2015 Florida Design Consultants, Inc. Drawings and concepts may not be used or reproduced without written permission.

K:\213\ProjData\ConstDocs\Plans\Promenade Parkway\213_PROMENADE-PSPM4.DWG - May 27, 2015 @ 12:15pm - asyrisko

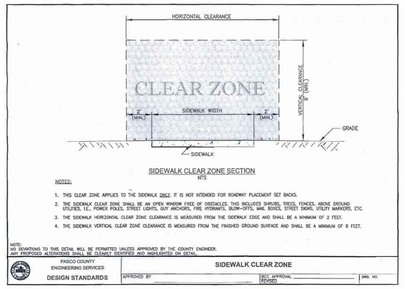

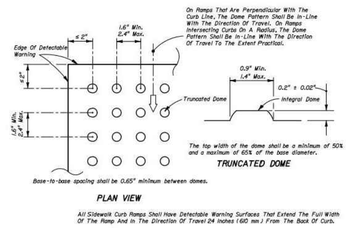

CURB RAMP DETECTABLE WARNING DETAIL

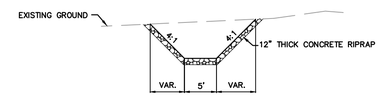

SECTION A

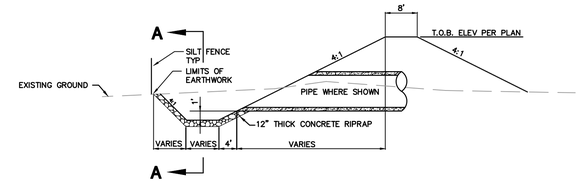

TYPICAL OUTFALL SUMP DETAIL

NTS

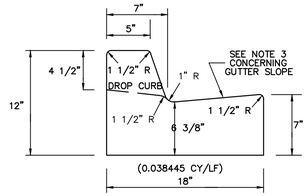

NOTES:

1. MATERIALS AND CONSTRUCTION SHALL CONFORM TO THE FDOT STANDARD SPECIFICATIONS FOR ROAD AND BRIDGE CONSTRUCTION.
2. CONCRETE SHALL BE CLASS I CONCRETE WITH A MINIMUM 28 DAY COMPRESSIVE STRENGTH OF 3000 PSI.
3. WHEN USED ON THE HIGH SIDE OF SUPER ELEVATED ROADWAY SECTIONS, THE CROSS SLOPE OF THE GUTTER SHALL MATCH THE CROSS SLOPE OF THE ADJACENT PAVEMENT. WHERE THIS CONDITION IS ENCOUNTERED, THE FRONT FACE VERTICAL DIMENSION SHALL REMAIN AS SHOWN FOR NORMAL SECTIONS SHOWN HEREON.

MODIFIED "F" CURB

NTS

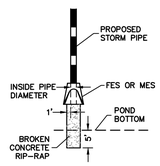

OUTFALL RIP RAP DETAIL

NTS

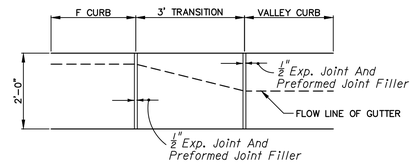

CURB TRANSITION DETAIL

NTS

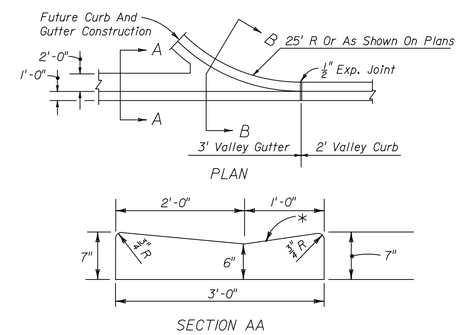

VALLEY GUTTER

NTS

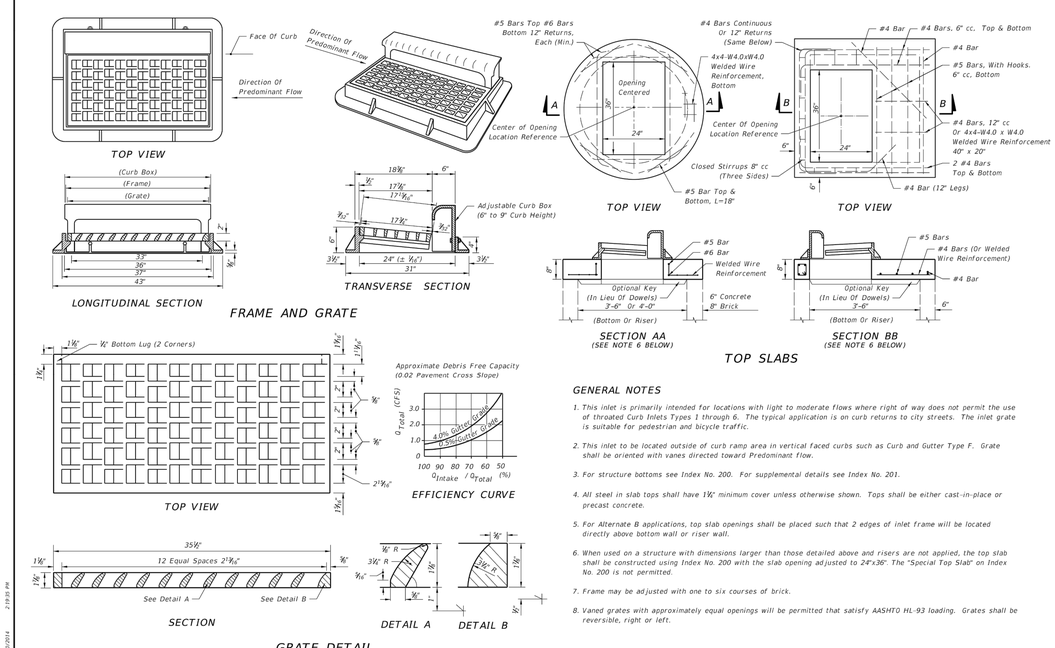

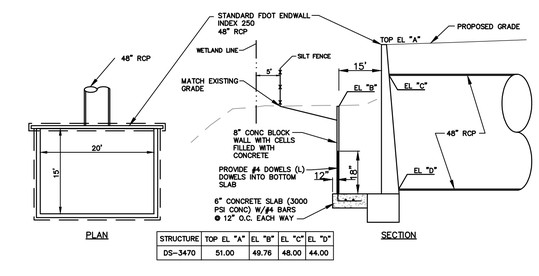

STRUCTURE	TOP EL "A"	EL "B"	EL "C"	EL "D"
DS-3470	51.00	49.76	48.00	44.00

DRAINAGE STRUCTURE DETAIL (DS-3470)

NTS

PAUL E. SKIDMORE
LICENSE NO. 39631
STATE OF FLORIDA
PROFESSIONAL ENGINEER

JOB NO.	DR.	DATE	DESIGNED	DRAWN	CHECKED
506-100C	213	5-1-2015	RAH	RAH	PES

NO.	DATE	REVISIONS	APP'D

DESIGNED FOR
ASTURIA COMMUNITY DEVELOPMENT DISTRICT
605 PALLICIA CLUB DRIVE, ST. PAUL'S BETHEL, FLORIDA 33595
PHONE: (904) 810-0500 - FAX: (904) 810-0525

PROJECT NAME: Asturia | PROMENADE PARKWAY

SHEET NAME: PAVING, GRADING, AND DRAINAGE DETAILS (1)

FLORIDA DESIGN CONSULTANTS, INC.
THINK IT. ACHIEVE IT.
3030 STARKEY BOULEVARD, NEW PORT RICHEY, FLORIDA 34655
PHONE: (800) 532 - 1047 FAX: (727) 848 - 3648 WWW.FLDESIGN.COM C.A. NO. 7421

© Copyright 2015 Florida Design Consultants, Inc. Drawings and concepts may not be used or reproduced without written permission.

K:\213\Proj\Data\ConstDocs\Plans\Promenade Parkway\213-PROMENADE-PRGDETAILS-1.dwg - May 27, 2015 @ 12:15pm - rayrako

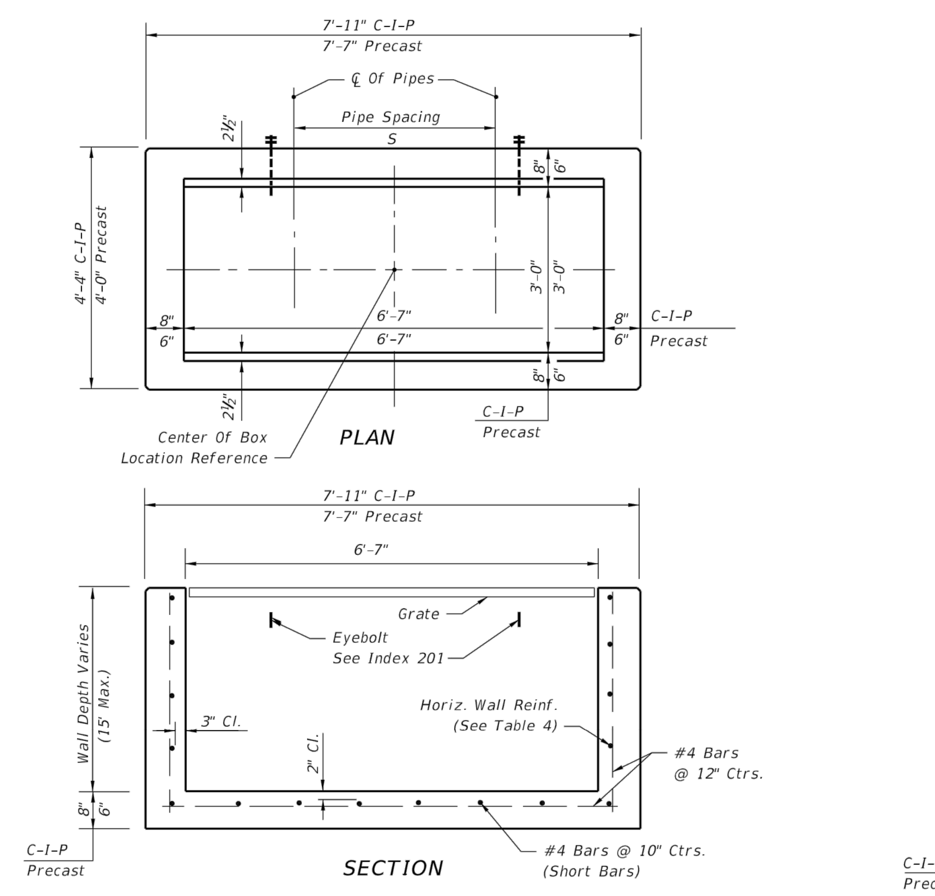

HORIZONTAL WALL REINFORCING SCHEDULES (TABLE 4)

WALL DEPTH	SCHEDULE	AREA (in.²/ft.)	MAX. SPACING BARS	MAX. SPACING WWF
0'-5'	B5.5	0.24	5½"	5"
5'-7'	C6.5	0.37	6½"	6"
7'-15'	D4.5	0.53	4½"	4"

TYPE H (2 & 3-GRATE INLET)

Recommended Maximum Pipe Size:
3'-0" Wall - 24" Pipe
6'-7" Wall - 1-60" Pipe
Or 2-24" Pipe (S=3'-5")

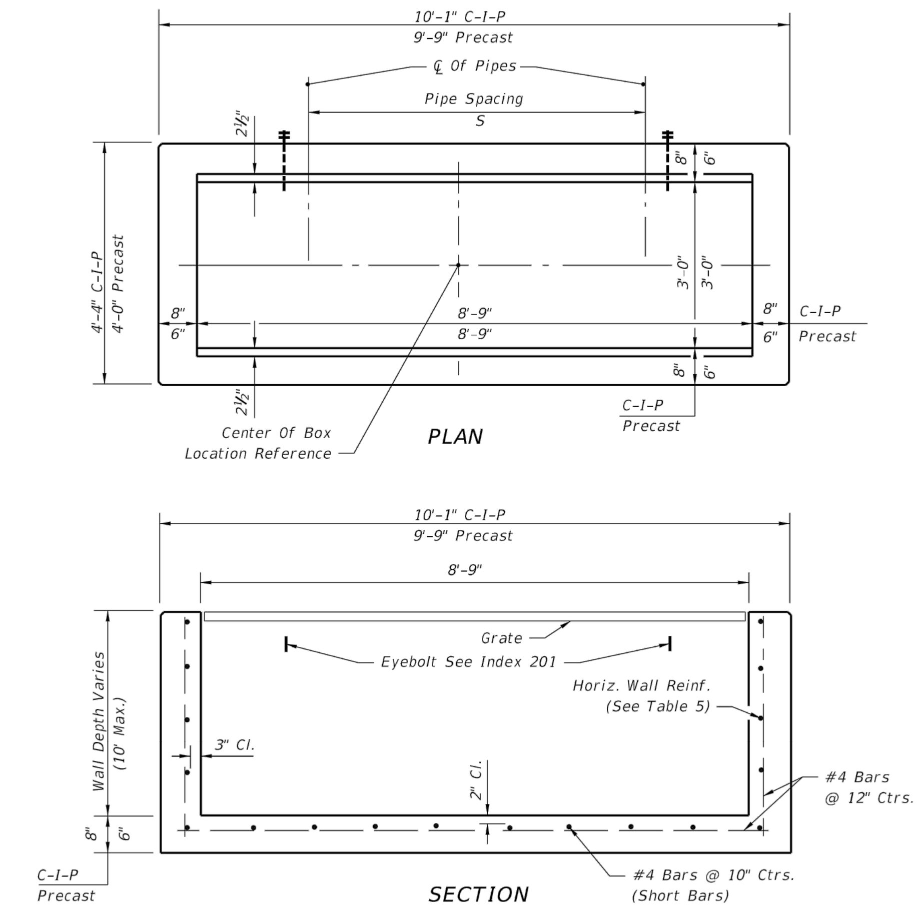

HORIZONTAL WALL REINFORCING SCHEDULES (TABLE 5)

WALL DEPTH	SCHEDULE	AREA (in.²/ft.)	MAX. SPACING BARS	MAX. SPACING WWF
0'-5'	C3.5	0.37	3½"	3"
5'-10'	D4.5	0.53	4½"	4"

TYPE H (4-GRATE INLET)

Recommended Maximum Pipe Size:
3'-0" Wall - 24" Pipe
8'-9" Wall - 1-78" Pipe
Or 2-30" Pipe (S=4'-3")

GENERAL NOTES
See Sheet 3 of 7.

LAST REVISION	REVISION DESCRIPTION:			INDEX NO.	SHEET NO.
07/01/05		FDOT 2015 DESIGN STANDARDS	DITCH BOTTOM INLET TYPES C, D, E AND H	232	2 of 7

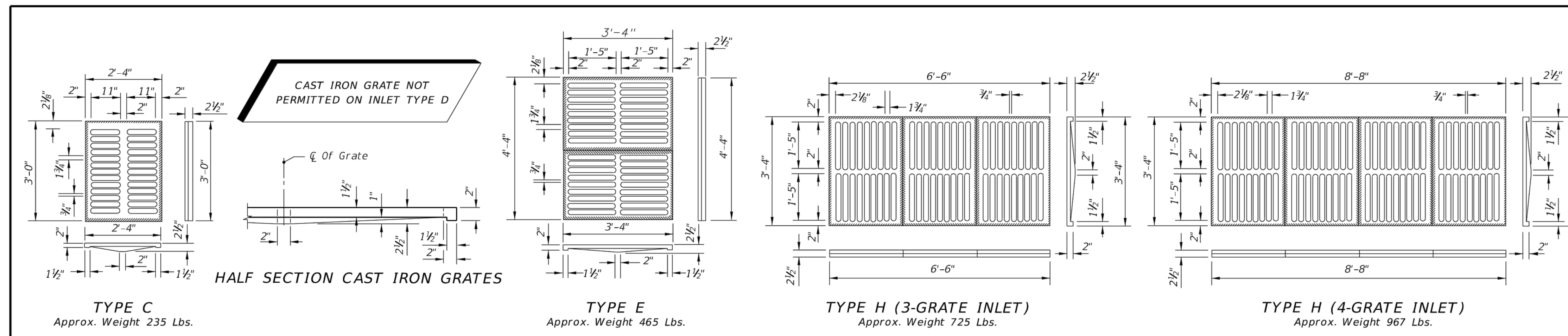

CAST IRON GRATES

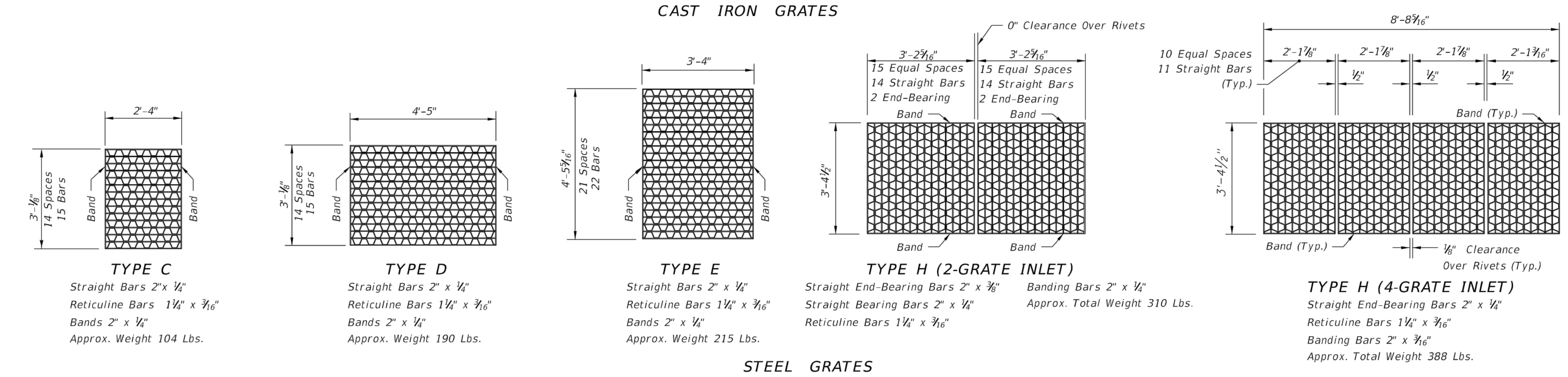

STEEL GRATES

NOTE: Steel Grates Are Required On Inlets With Traversable Slots And On Inlets where Bicycle Traffic Is Anticipated.

GENERAL NOTES

1. These inlets are suitable for bicycle traffic and are to be used in ditches, medians and other areas subject to infrequent traffic loadings but are not to be placed in areas subject to any heavy wheel loads. These inlets may be placed in areas subject to occasional pedestrian traffic such as landscaped areas and pavement areas where pedestrians can walk around the inlet.

2. Inlets subject to minimal debris should be constructed without slots. Where debris is a problem inlets should be constructed with slots. Slotted inlets located within roadway clear zones and areas subject to pedestrians shall have traversable slots. The traversable slot modification is not adaptable to inlet Type H. Slots may be constructed at either or both ends as shown on plans. Traversable slots shall not be used in areas subject to occasional bicycle traffic.

3. Steel grates are to be used on all inlets where bicycle traffic is anticipated. Steel grates are to be used on all inlets with traversable slots. Either cast iron or steel grates may be used on inlets without slots where bicycle traffic is not anticipated. Either cast iron or steel grates may be used on all inlets with non-traversable slots. Subject to the selection described above, when Alternate G grate is specified in the plans, either the steel grate, hot dip galvanized after fabrication, or the cast iron grate may be used, unless the plans stipulate the particular type.

4. Recommended maximum pipe sizes shown are for concrete pipe. Size for other types of pipe must be checked for fit.

5. All exposed edges and corners shall be ¾" chamfer or tooled to ¼" radius.

6. Concrete inlet pavement to be used on inlets without slots and inlets with non-traversable slots only when called for in the plans; but required on all traversable slot inlets. Cost to be included in contract unit price for inlets. Quantities shown are for information only.

7. Traversable slots constructed in existing inlets shall be paid for as inlets partial. For conversion work and method of payment see 'TRAVERSABLE SLOT INLETS (PARTIAL) FOR EXISTING INLETS'.

8. Sodding to be used on all inlets not located in paved areas and paid for under contract unit price for Performance Turf, SY.

9. For supplementary details see Index No. 201.

10. All reinforcing is Grade 60 bars with 2" min. cover unless otherwise noted. Bars to be cut or bent for 1½" clearance around pipe opening. Provide one additional #4 bar above and at each side of pipe opening.

LAST REVISION	REVISION DESCRIPTION:			INDEX NO.	SHEET NO.
07/01/10		FDOT 2015 DESIGN STANDARDS	DITCH BOTTOM INLET TYPES C, D, E AND H	232	3 of 7

DIMENSIONS AND QUANTITIES

	D	X	A	B	C	E	F	G	H ■	M Single Pipe	M Double Pipe	M Triple Pipe	M Quad. Pipe	N	5½" Concrete Slab (CY) ◪ Single Pipe	Slab Double Pipe	Slab Triple Pipe	Slab Quad. Pipe	Sodding (SY) Single Pipe	Sodding Double Pipe	Sodding Triple Pipe	Sodding Quad. Pipe
1:2 Slope	15"	2'-7"	1.92'	2.18'	4.10'	2.06'	5'	1.22'	2.9'	4.63'	7.21'	9.79'	12.37'	1.19'	0.38	0.58	0.77	0.96	21	24	27	30
	18"	2'-10"	1.97'	2.74'	4.71'	2.56'	6'	1.41'	3.4'	4.92'	7.75'	10.58'	13.42'	1.21'	0.44	0.65	0.87	1.09	22	25	28	31
	24"	3'-5"	2.06'	3.85'	5.91'	3.56'	7'	1.73'	3.4'	5.50'	8.92'	12.33'	15.75'	1.25'	0.54	0.83	1.12	1.42	24	28	32	35
	30"	4'-3"	2.15'	4.95'	7.10'	4.56'	8'	2.00'	3.4'	6.08'	10.33'	14.58'	18.83'	1.29'	0.66	1.09	1.50	1.91	26	31	35	40
	36"	5'-1"	2.25'	6.08'	8.33'	5.56'	9'	2.24'	3.4'	6.67'	11.75'	16.83'	21.92'	1.33'	0.81	1.38	1.95	2.51	28	34	39	45
	42"	6'-0"	2.34'	7.21'	9.55'	6.56'	10'	2.45'	3.4'	7.25'	13.25'	19.25'	25.25'	1.38'	0.97	1.70	2.45	3.19	30	37	43	50
	48"	6'-9"	2.43'	8.33'	10.76'	7.56'	11'	2.65'	3.4'	7.83'	14.58'	21.33'	28.08'	1.42'	1.13	2.04	2.93	3.84	32	39	47	54
	54"	7'-8"	2.52'	9.44'	11.96'	8.56'	12'	2.83'	3.4'	8.42'	16.08'	23.75'	31.42'	1.46'	1.31	2.44	3.58	4.72	34	42	51	59
	60"	8'-6"	2.62'	10.56'	13.18'	9.56'	14'	3.00'	4.4'	9.00'	17.50'	26.00'	34.50'	1.50'	1.51	2.89	4.28	5.68	36	45	55	64
	66"	9'-2"	2.71'	11.68'	14.39'	10.56'	15'	3.18'	4.4'	9.58'	18.75'	27.92'	37.08'	1.54'	1.68	3.25	4.84	6.43	38	48	58	68
	72"	10'-0"	2.80'	12.80'	15.60'	11.56'	16'	3.30'	4.4'	10.16'	20.16'	30.16'	40.16'	1.58'	1.89	3.74	5.59	7.45	40	51	62	73
1:4 Slope	15"	2'-7"	2.27'	4.09'	6.36'	4.03'	8'	1.22'	4.0'	4.63'	7.21'	9.79'	12.37'	1.19'	0.57	0.87	1.15	1.44	23	26	29	32
	18"	2'-10"	2.36'	5.12'	7.48'	5.03'	9'	1.41'	4.0'	4.92'	7.75'	10.58'	13.42'	1.21'	0.66	0.99	1.31	1.65	25	28	31	35
	24"	3'-5"	2.53'	7.18' △	9.71'	7.03' △	11'	1.73'	4.0'	5.50'	8.92'	12.33'	15.75'	1.25'	0.85	1.30	1.75	2.20	28	32	36	40
	30"	4'-3"	2.70'	9.25'	11.95'	9.03'	13'	2.00'	4.0'	6.08'	10.33'	14.58'	18.83'	1.29'	1.10	1.74	2.39	3.05	31	36	41	46
	36"	5'-1"	2.87'	11.31' ◇	14.18'	11.03' ◇	15'	2.24'	4.0'	6.67'	11.75'	16.83'	21.92'	1.33'	1.32	2.21	3.08	3.96	34	40	46	52
	42"	6'-0"	3.05'	13.37'	16.42'	13.03'	17'	2.45'	4.0'	7.25'	13.25'	19.25'	25.25'	1.38'	1.58	2.76	3.91	5.09	38	44	51	58
	48"	6'-9"	3.22'	15.43'	18.65'	15.03'	19'	2.65'	4.0'	7.83'	14.58'	21.33'	28.08'	1.42'	1.85	3.30	4.73	6.17	41	48	56	63
	54"	7'-8"	3.39'	17.49'	20.88'	17.03'	21'	2.83'	4.0'	8.42'	16.08'	23.75'	31.42'	1.46'	2.14	3.95	5.77	7.58	44	52	61	69
	60"	8'-6"	3.56'	19.55'	23.11'	19.03'	23'	3.00'	4.0'	9.00'	17.50'	26.00'	34.50'	1.50'	2.45	4.66	6.87	9.07	47	56	66	75
	66"	9'-2"	3.73'	21.62'	25.35'	21.03'	25'	3.18'	4.0'	9.58'	18.75'	27.92'	37.08'	1.54'	2.88	5.54	8.18	10.84	49	59	69	80
	72"	10'-0"	3.91'	23.68'	27.59'	23.03'	27'	3.30'	4.0'	10.16'	20.16'	30.16'	40.16'	1.58'	3.54	6.61	9.87	13.13	52	63	74	85

◪ See General Note No. 5.
See Sheet 5 For 3" Slab Quantities

■ Values shown for estimating pipe quantities and are for information only.

B	E	
△ 6.42'	△ 6.25'	Dimensions permitted to allow use of 8' standard pipe lengths.
◇ 10.40'	◇ 10.10'	Dimensions permitted to allow use of 12' standard pipe lengths.

△ ◇ Concrete slab shall be deepened to form bridge across crown of pipe. See section below.

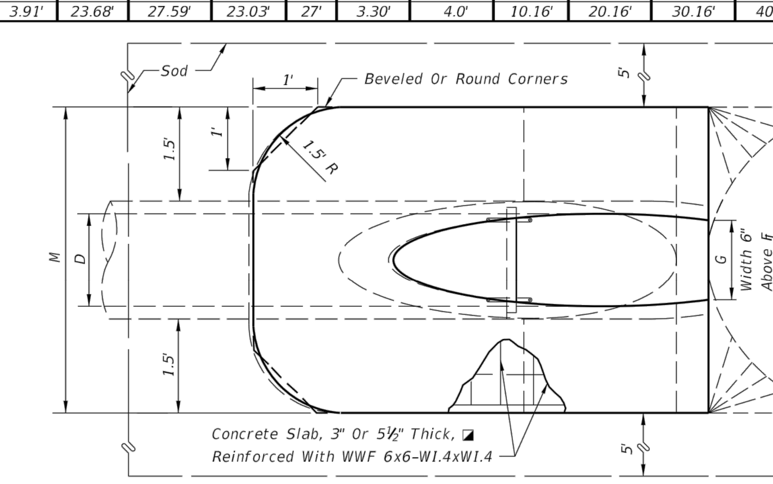

TOP-VIEW SINGLE PIPE

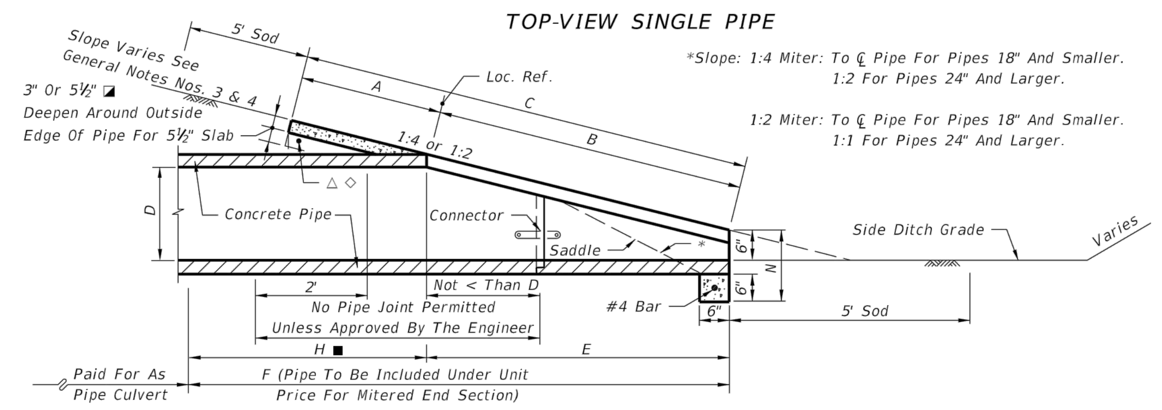

SECTION

*Slope: 1:4 Miter: To ℄ Pipe For Pipes 18" And Smaller.
1:2 For Pipes 24" And Larger.

1:2 Miter: To ℄ Pipe For Pipes 18" And Smaller.
1:1 For Pipes 24" And Larger.

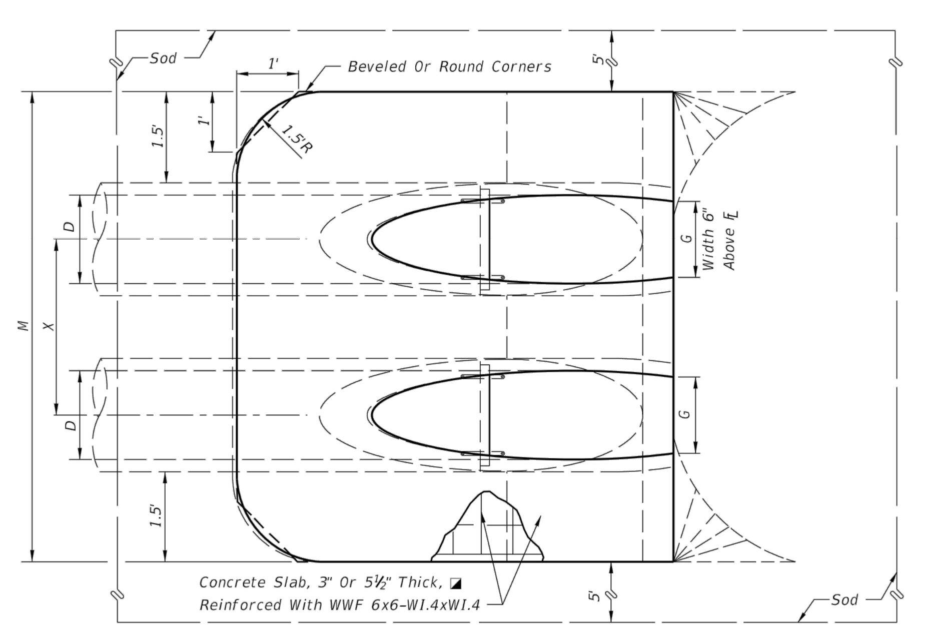

TOP-VIEW MULTIPLE PIPE

NOTE: See sheet 6 for details and notes.

SINGLE AND MULTIPLE ROUND CONCRETE PIPE

LAST REVISION	REVISION DESCRIPTION:			INDEX NO.	SHEET NO.
07/01/02		FDOT 2015 DESIGN STANDARDS	CROSS DRAIN MITERED END SECTION	272	1 of 6

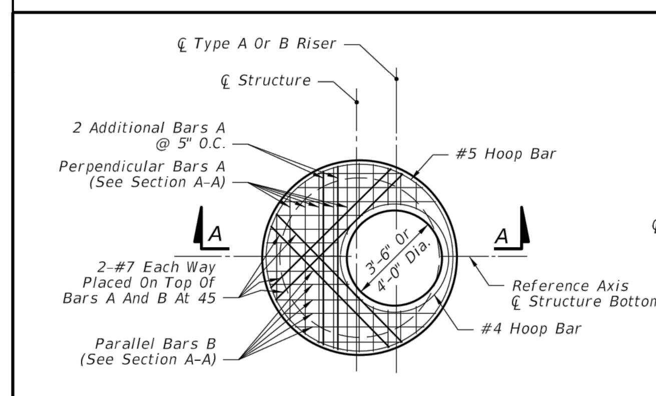

NOTE:
Not Applicable For Type A, B, C, D & E Ditch Bottom Inlets Or Type S & V Gutter Inlets.
See Index Nos. 220, 221, 230, 231 & 232.

TOP SLAB REINFORCING STEEL DIAGRAM
(ALTERNATE A)

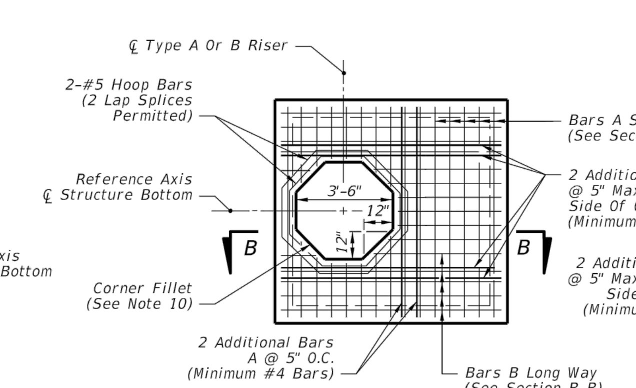

SQUARE OPENING WITH CORNER FILLETS

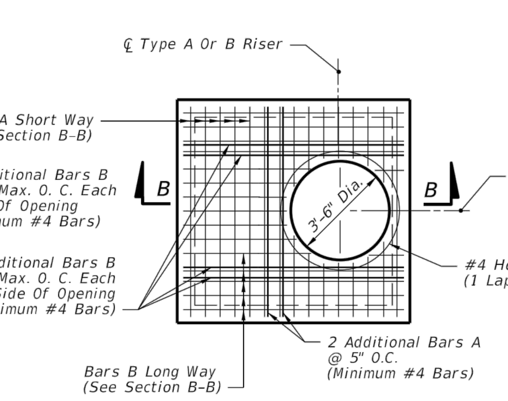

ROUND RISER OPENING

TOP SLAB REINFORCING STEEL DIAGRAM
(ALTERNATE B)

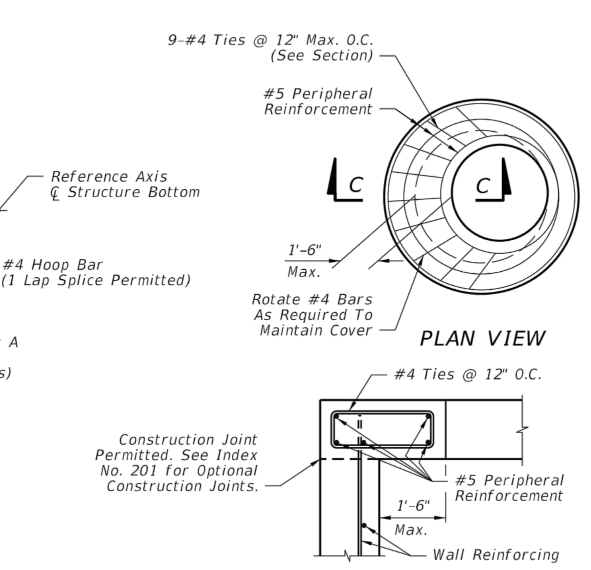

SECTION C-C
SPECIAL TOP SLAB*

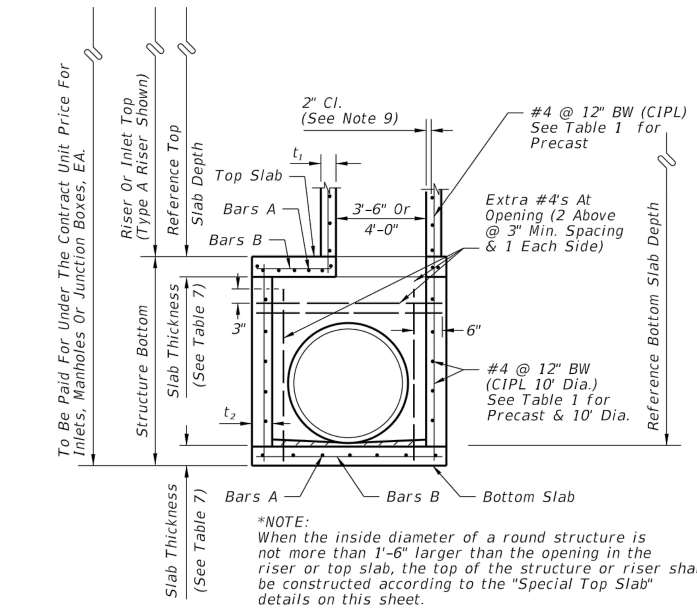

*NOTE:
When the inside diameter of a round structure is not more than 1'-6" larger than the opening in the riser or top slab, the top of the structure or riser shall be constructed according to the "Special Top Slab" details on this sheet.

SECTION A-A
(ALTERNATE A)

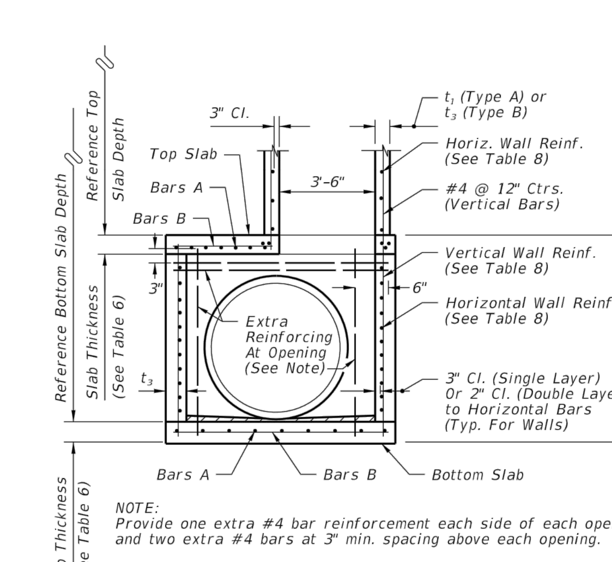

NOTE:
Provide one extra #4 bar reinforcement each side of each opening and two extra #4 bars at 3" min. spacing above each opening.

SECTION B-B
(ALTERNATE B)

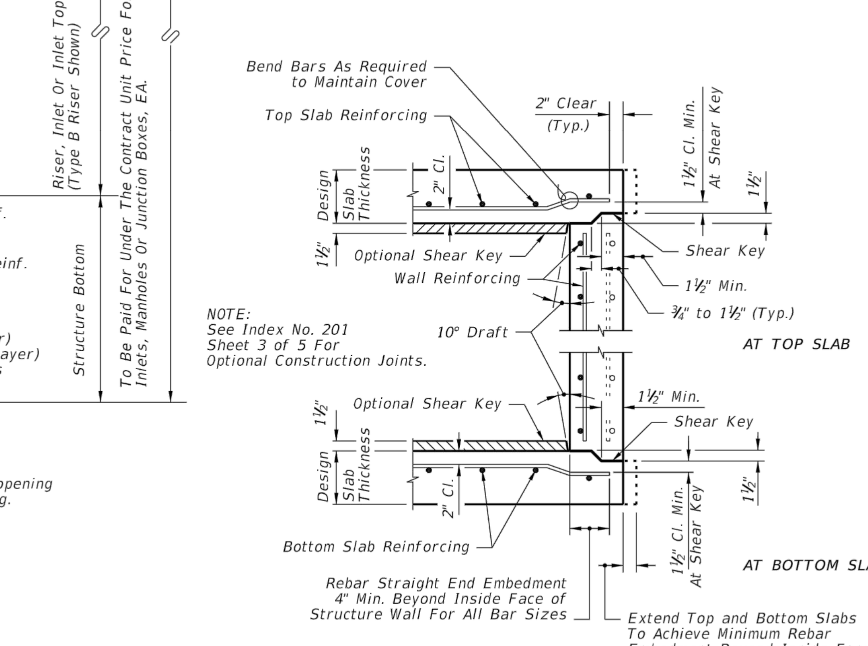

NOTE:
See Index No. 201
Sheet 3 of 5 For
Optional Construction Joints.

TYPICAL SLAB TO WALL DETAILS
FOR PRECAST STRUCTURES

LAST REVISION	REVISION DESCRIPTION:			INDEX NO.	SHEET NO.
07/01/14		FDOT 2015 DESIGN STANDARDS	STRUCTURE BOTTOMS TYPE J AND P	200	1 of 5

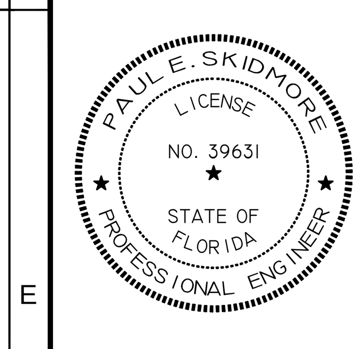

JOB NO.	EPN	DATE	DESIGNED	DRAWN	CHECKED	Q.C.
506-100C	213	5-1-2015	RAH	RAH	PES	

NO.	DATE	REVISIONS	APP'D BY

DESIGNED FOR
ASTURIA COMMUNITY DEVELOPMENT DISTRICT
605 PALENCIA CLUB DRIVE, ST. AUGUSTINE, FLORIDA 32095
PHONE: (904) 810-0500 - FAX: (904) 810-0525

PROJECT NAME
Asturia | **PROMENADE PARKWAY**

SHEET NAME
PAVING, GRADING, AND DRAINAGE DETAILS (2)

FLORIDA DESIGN CONSULTANTS, INC.
THINK IT. ACHIEVE IT.
3030 STARKEY BOULEVARD, NEW PORT RICHEY, FLORIDA 34655
PHONE: (800) 532 - 1047 FAX: (727) 848 - 3648 WWW.FLDESIGN.COM C.A. NO. 7421

©Copyright 2015 Florida Design Consultants, Inc. Drawings and concepts may not be used or reproduced without written permission.

K:\213\ProjData\ConstDocs\Plans\Promenade Parkway\213_PROMENADE-PPGDDETAILS-2.dwg - May 27, 2015 @ 12:15pm - asyrisko

ROUND STRUCTURE BOTTOMS (ALTERNATE A) & ROUND RISERS– TABLE 1

Wall Thickness (t_1 & t_2) and Vertical & Horizontal Areas of Reinforcement (A_s)

Type	Structure/Riser Diameter (ft)	Cast-In-Place Items Class II Concrete			Precast Items Class II Concrete			Precast Items ASTM C478	
		t_1 Riser (in.)	t_2 Bottom (in.)	A_s (in.²/ft.)	t_1 Riser (in.)	t_2 Bottom (in.)	A_s (in.²/ft.)	t_1 or t_2 (in.)	A_2 *** (in.²/ft.)
P	3'-6"	6	8	0.20	6	8	0.20	4**	0.105
P	4'-0"	6	8	0.20	6	8	0.20	5**	0.120
J	5'-0"	–	8	0.20	–	8	0.20	6**	0.150
J	6'-0"	–	8	0.20	–	8	0.20	6	0.180
J	7'-0"	–	8	0.20	–	8	0.20	7	0.210
J	8'-0"	–	8	0.20	–	8	0.20	8	0.240
J	10'-0"	–	10	0.40##	–	10	0.40##	10	0.300
J	12'-0"	–	10	0.40##	–	12	0.40##	12	0.360

TABLE 1 NOTES:
##Provide 0.20 eq. in.²/ft. at each face, 12" max. bar spacing.
**Modified minimum wall thickness.
***Min. total circumferential reinforcement for continuous steel hoops:
A_2 = 0.50 sq. in. for riser section height equal or less than 2'-0" (2 hoop min.)
A_2 = 0.75 sq. in. for riser section height more than 2'-0" up to 4'-0" (3 hoop min.)
Areas of reinforcing for precast items are based on Grade 60 reinforcing;
No reduction in the area of reinforcement is allowed for welded wire fabric in Table 1;
Area of vertical reinforcing may be reduced in accordance with ASTM C478.

SQUARE & RECTANGULAR STRUCTURES (ALTERNATE B) – TABLE 2

Type	Wall Length (ft)	Max. Depth (ft)	Wall Thickness (t_3) CIP (in.)	Wall Thickness (t_3) Precast (in.)
P	≤ 3'-6"	40	6 Riser 8 Bottom	6
J	4'-0"	40	8	6
J	5'-0"	22	–	6
J	6'-0"	15	–	6
J	5'-0" to 9'-0"	40	8	8
J	10'-0"	26	8	8
J	10'-0" to 12'-0"	40	10	9
J	16'-0"	35	–	9
J	16'-0"	40	10	10
J	20'-0"	25	–	9
J	20'-0"	30	10	10

TABLE 2 NOTES:
See Table 8 for Reinforcing Schedule.

GENERAL NOTES

1. Standard structure bottoms 4'-0" diameter and smaller (Alt. A) and 3'-6" square (Alt. B) are designated Type P. Larger standard structure bottoms are designated Type J. Risers are permitted for all structures. Round risers are designated Type A, square risers are designated Type B.
2. Walls of circular structures (Alt. A) constructed in place may be of brick or reinforced concrete. Precast and rectangular structures (Alt. B) shall be constructed of reinforced concrete only.
3. Wall thickness and reinforcement are for either reinforced cast-in-place or precast concrete units except that precast circular units may be furnished with walls in accordance with ASTM C478 (see modified wall thicknesses in Table 1).
4. Top and bottom slab thickness and reinforcement are for precast and cast-in-place construction. All concrete shall be of Class II concrete, except use Class IV concrete when shown in the Plans, for special applications of structures located in extremely aggressive environments. Concrete as specified in ASTM C478 (4000 psi) may be used in lieu of Class II concrete for precast items manufactured in accordance with Specifications Section 449.
5. All reinforcement shown is Grade 60 steel, deformed bar. Equivalent area Grade 40 steel or equivalent area smooth or deformed welded wire reinforcement in accordance with Specification Section 931 may be substituted according to Index No. 201, unless otherwise noted.
6. Alt. A or Alt. B structure bottoms may be used in conjunction with curb inlet tops Types 1, 2, 3, 4, 5, 6, 9, and 10, and any manhole or junction box unless otherwise shown in the plans or other standard drawings. Alt. B structure bottoms may be used in conjunction with curb inlet Types 7 & 8, or any ditch bottom inlet unless otherwise shown in the plans or other standard drawings.
7. Rectangular structures may be rotated as directed by the Engineer in order to facilitate connections between the structure walls and storm sewer pipes.
8. Except when ACI hooks are specifically required, reinforcement in top and bottom slab shall be straight embedment.
9. All reinforcement must have 2" minimum cover except for 3'-6" diameter precast circular units manufactured under ASTM C478, keyed construction otherwise shown. Additional bars used to restrain hole formers for precast structures with grouted pipe connections,may be left flush with the hole surface. Cut or bend reinforcement at pipe openings to maintain cover. Exposed ends of reinforcing at precast pipe openings and grouted joints must be removed to 1" below the concrete surface and sealed with a Type F epoxy in accordance with Specification Section 926. Horizontal steel in rectangular structures shall be lapped a minimum of 30 bar diameters or by standard hooks at corners.
10. The corner fillets shown are necessary for rectangular structures used with circular risers and inlet throats and when used on skew with rectangular risers, inlets and inlet throats. Fillets will be required in the top slab of the Alt. A structure bottoms when used with the Alt. B risers. Each fillet shall be reinforced with two #5 bars.
11. Inlet walls, throats, risers or manhole tops shall be secured to structures as shown on Index No. 201 (Sheet 3 of 5) Optional Construction Joints.
12. Structures with depths over 14' below the mean high water table are to be checked for flotation by the designer of the drainage project.
13. Units larger than specified standards may be substituted at the contractor's option when these units will not cause or increase the severity of utility conflicts. Such larger units shall be furnished at no additional cost to the Department. Larger Alt. A units cannot replace Alt. B units without approval of the Engineer. This note applies to this Index only.
14. For manhole and junction box tops, for frames and covers, and, for supplementary details and notes see Index No. 201.
15. Type J structure bottoms must have a minimum 6'-0" wall height when possible, for maintenance access.

6/27/2014 5:44:36 AM

LAST REVISION 07/01/13	REVISION	DESCRIPTION:	FDOT 2015 DESIGN STANDARDS	STRUCTURE BOTTOMS TYPE J AND P	INDEX NO. 200	SHEET NO. 2 of 5

TABLE 3-MINIMUM STRUCTURE SIZES FOR SINGLE PIPE CONNECTION PER SIDE

PIPE SIZE	RECTANGULAR Side Dimension (L) Single Pipe Per Side	Note Number	ROUND Diameter (D) Single Pipe or θ=180°	ROUND Diameter (D) 2 to 4 Pipes θ=90°
18"	3'-6"		3'-6"	4'-0"
24"	3'-6"		3'-6"	5'-0"
30"	3'-6"/4'-0"	2	4'-0"	6'-0"
36"	4'-0"/5'-0"	3	5'-0"	7'-0"
42"	5'-0"		6'-0"	7'-0"
48"	6'-0"		6'-0"	8'-0"
54"	6'-0"		7'-0"	10'-0"
60"	7'-0"		7'-0"	10'-0"
66"	7'-0"/8'-0"	4	8'-0"	12'-0"
72"	8'-0"		8'-0"	12'-0"
78"	9'-0"		10'-0"	12'-0"
84"	9'-0"		12'-0"	N/A

TABLE 3 NOTES:
1. For Round Structures sizes with variable angles between pipes and variable pipe sizes, refer to the FDOT Storm Drain Handbook.
2. For 3'-6" Precast Square Structure Bottoms, 30" Pipes with similar invert elevations are not permitted in adjacent walls. Use 4'-0" Side Dimensions when 30" pipe openings are required on adjacent walls and the difference in flow lines is less than 3'-0".
3. For 4'-0" Precast Square Structure Bottoms, 36" Pipes with similar invert elevations are not permitted in adjacent walls. Use 5'-0" Side Dimensions when 36" pipe openings are required on adjacent walls and the difference in flow lines is less than 3'-0".
4. For 7'-0" Precast Square Structure Bottoms, 66" Pipes with similar invert elevations are not permitted in adjacent walls. Use 8'-0" Side Dimensions when 66" pipe openings are required on adjacent walls and the difference in flow lines is less than 4'-0".

TABLE 4-MINIMUM SIZES FOR MULTIPLE PARALLEL PIPE CONNECTIONS FOR RECTANGULAR STRUCTURE BOTTOMS

PIPE SIZE	PIPE SPACING (S)	MINIMUM WALL LENGTH (L) FOR NUMBER OF PARALLEL PIPES 2	3	4
18"	2'-10"	6'-0"	8'-6"	11'-0"
24"	3'-5"	6'-6"	10'-0"	13'-6"
30"	4'-3"	8'-0"	12'-6"	16'-6"
36"	5'-1'	9'-6"	14'-6"	19'-6"
42"	6'-0"	11'-0"	17'-0"	–
48"	6'-9"	12'-6"	19'-0"	–
54"	7'-8"	14'-0"	–	–
60"	8'-6"	15'-0"	–	–
66"	9'-0"	16'-6"	–	–
72"	10'-0"	18'-0"	–	–
78"	10'-9"	19'-0"	–	–
84"	11'-8"	20'-6"	–	–

TABLE 4 NOTES:
1. Minimum wall lengths based on precast structures, using concrete pipe with maximum skew angles per Table 5.
2. Wall lengths exceeding 20'-0" require special designs.

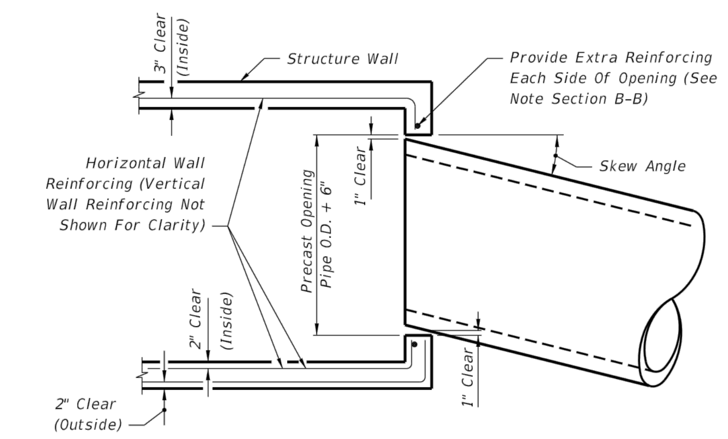

MAXIMUM PIPE SKEW FOR PRECAST ROUND OPENINGS
PLAN VIEW

TABLE 5 - MAXIMUM PIPE SKEW FOR PRECAST ROUND OPENINGS

	WALL THICKNESS	PIPE SIZE 18"	24"	30"	36"	42"	48"	54"	60"	66"	72"	78"	84"
MAXIMUM SKEW ANGLE	8"	19°	17°	16°	16°	15°	14°	14°	13°	13°	13°	12°	12°
	6"	21°	20°	18°	17°	17°	16°	15°	15°	14°	14°	13°	13°

TABLE 5 NOTES:
These values are based on 2" clearance for precast structures.
Larger skews are possible for Cast-In-Place Structures or elliptical pipe openings when approved by the Engineer.

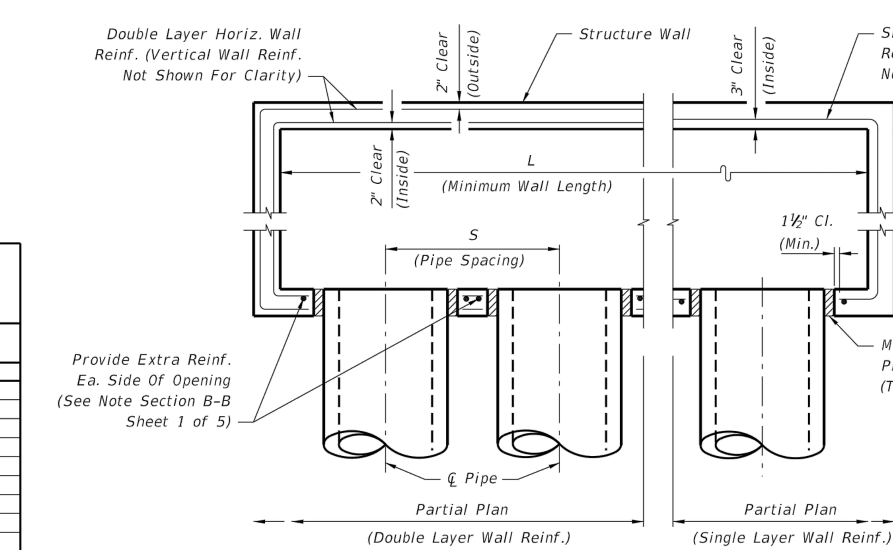

MULTIPLE PARALLEL PIPE CONNECTIONS DETAIL
PLAN VIEW

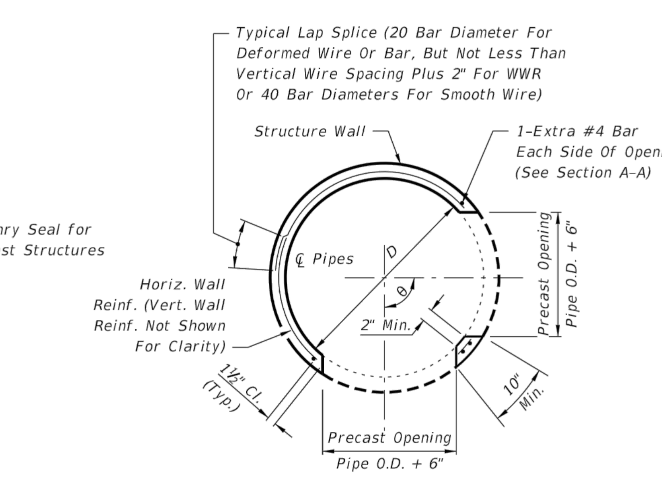

PRECAST ROUND STRUCTURES WITH MULTIPLE PIPE CONNECTIONS

STRUCTURE SIZES FOR PIPE CONNECTIONS

6/27/2014 5:44:36 AM

LAST REVISION 07/01/07	REVISION	DESCRIPTION:	FDOT 2015 DESIGN STANDARDS	STRUCTURE BOTTOMS TYPE J AND P	INDEX NO. 200	SHEET NO. 3 of 5

SLAB DESIGNS - SQUARE AND RECTANGULAR STRUCTURES (TABLE 6)
(ALL SLABS 8" THICK EXCEPT AS NOTED - REINFORCING PARALLEL TO SHORT WAY AND LONG WAY)

SHORT-WAY SLAB DEPTH	SHORT-WAY SCHEDULE (Bars A)	LONG-WAY SLAB DEPTH	LONG-WAY SCHEDULE (Bars B)
SIZE: 3'-6" x UNLIMITED			
≥0.5' < 8'	B10	≥0.5' < 24'	B10
8' < 13'	B5.5	24'-40'	B5.5
13' < 31'	C6.5		
31'-40'	D7		
SIZE: 4' x UNLIMITED			
≥0.5' < 7'	B5.5	≥0.5' < 15'	B10
7' < 19'	C6.5	15' < 29'	B5.5
19' < 31'	D7	29'-40'	C6.5
31'-40'	E5		
SIZE: 5' x 5'			
≥0.5' < 3'	C6.5	≥0.5' < 3'	C6.5
3' < 7'	B5.5	3' < 13'	C6.5
7' < 22'	C6.5	13' < 22'	D7
22' < 29'	D7	22' < 29'	D4.5
29'-40'	E5	29'-40'	E5
SIZE: 5' x 6'			
≥0.5' < 12'	C6.5	≥0.5' < 3'	C6.5
12' < 26'	D7	3' < 9'	B5.5
26'-40'	E5	9' < 23'	C3.5
		23' < 35'	D4.5
		35'-40'	E5
SIZE: 5' x 7'			
≥0.5' < 10'	C6.5	≥0.5' < 10'	B5.5
10' < 20'	D7	10' < 31'	C3.5
20' < 34'	E5	31'-40'	D4.5
34'-40'	F5		
SIZE: 5' x 8'			
≥0.5' < 7'	C6.5	≥0.5' < 8'	B10
7' < 13'	D7	8' < 17'	B5.5
13' < 24'	E5	17' < 25'	C6.5
24'-40'	F5	25'-40'	C3.5
SIZE: 5' x 9'			
≥0.5' < 8'	C6.5	≥0.5' < 14'	B10
8' < 14'	D7	14' < 24'	B5.5
14' < 25'	E5	24' < 34'	C6.5
25'-40'	F5	34'-40'	C3.5
SIZE: 5' x UNLIMITED			
≥0.5' < 8'	C6.5	≥0.5' < 14'	B10
8' < 14'	D7	14' < 24'	B5.5
14' < 25'	E5	24' < 34'	C6.5
25'-40'	F5	34'-40'	C3.5

SHORT-WAY SLAB DEPTH	SHORT-WAY SCHEDULE (Bars A)	LONG-WAY SLAB DEPTH	LONG-WAY SCHEDULE (Bars B)
SIZE: 6' x 6'			
≥0.5' < 13'	C6.5	≥0.5' < 10'	C3.5
13' < 23'	D7	10' < 18'	D4.5
23'-40'	E5	18' < 27'	E5
		27' < 33'	E3
		33'-40'	F5
SIZE: 6' x 7'			
≥0.5' < 8'	C6.5	≥0.5' < 8'	C6.5
8' < 16'	D7	8' < 12'	C3.5
16' < 28'	E5	12' < 21'	D4.5
28'-40'	F5	21' < 28'	E5
		28' < 35'	E3
		35'-40'	F5
SIZE: 6' x 8'			
≥0.5' < 6'	C6.5	≥0.5' < 6'	B5.5
6' < 13'	D7	6' < 11'	C6.5
13' < 22'	E5	11' < 17'	C3.5
22' < 35'	F5	17' < 22'	D4.5
35'-40'	G5	22' < 32'	E5
		32'-40'	E3
SIZE: 6' x 9'			
≥0.5' < 8'	D7	≥0.5' < 8'	B5.5
8' < 14'	E5	8' < 14'	C6.5
14' < 24'	F5	14' < 21'	C3.5
24'-34'	G5	21' < 25'	D4.5
		25'-34'	E5
SIZE: 6' x UNLIMITED			
≥0.5' < 8'	D7	≥0.5' < 8'	B5.5
8' < 14'	E5	8' < 14'	C6.5
14' < 24'	F5	14' < 21'	C3.5
24'-34'	G5	21' < 25'	D4.5
		25'-34'	E5
SIZE: 7' x 7'			
≥0.5' < 8'	C6.5	≥0.5' < 4'	C6.5
8' < 15'	D7	4' < 7'	C3.5
15' < 26'	E5	7' < 11'	D4.5
26'-40'	F5	11' < 22'	E3
		22' < 32'	F3.5
		32'-40'	G3.5
SIZE: 7' x 8'			
≥0.5' < 5'	C6.5	≥0.5' < 5'	C6.5
5' < 11'	D7	5' < 8'	C3.5
11' < 19'	E5	8' < 13'	D4.5
19' < 30'	F5	13' < 22'	E3
30'-40'	G5	22' < 30'	F3.5
		30'-40'	G3.5
SIZE: 7' x 9'			
≥0.5' < 9'	D7	≥0.5' < 7'	C6.5
9' < 15'	E5	7' < 10'	C3.5
15' < 25'	F5	10' < 14'	D4.5
25' - 34'	G5	14' < 21'	E5
		21' < 29'	F5
		29'-34'	F3.5

SHORT-WAY SLAB DEPTH	SHORT-WAY SCHEDULE (Bars A)	LONG-WAY SLAB DEPTH	LONG-WAY SCHEDULE (Bars B)
SIZE: 8' x 8'			
≥0.5' < 10'	D7	≥0.5' < 9'	D4.5
10' < 19'	E5	9' < 13'	E5
19'-30'	F5	13' < 18'	F5
		18' < 23'	F3.5
		23'-30'	G3.5
SIZE: 8' x 9'			
≥0.5' < 8'	D7	≥0.5' < 7'	D7
8' < 14'	E5	7' < 9'	D4.5
14' < 23'	F5	9' < 15'	E3
23'-31'	G3.5	15' < 20'	F5
		20' < 23'	F3.5
		23'-31'	G3.5
SIZE: 9' x 9'			
≥0.5' < 8'	D7	≥0.5' < 7'	D4
8' < 14'	E5	7' < 10'	E5
14' < 22'	F5	10' < 17'	F3.5
		17' < 22'	G3.5
SIZE: 9'x9'x10" SLAB THICKNESS			
22' < 36'	F5	22' < 31'	F3.5
36'-40'	G5	31'-40'	G3.5
SIZE: 10'x10'x10" SLAB THICKNESS			
≥0.5' < 7'	C6.5	0.5' < 6'	C6.5
7' < 10'	D7	6' < 9'	D4.5
10' < 18'	E5	9' < 15'	E5
18' < 27'	F5	15' < 22'	F5
27'-32'	G5	22'-32'	G3.5
SIZE: 12'x12'x12" SLAB THICKNESS			
≥0.5' < 10'	D7	≥0.5' < 8'	D7
10' < 16'	E5	8' < 14'	E5
16' < 25'	F5	14' < 22'	F5
25'-35'	G5	22' < 30'	G5
		30'-35'	H4

SLAB DESIGNS - ROUND STRUCTURES (TABLE 7)

SLAB DEPTH	SLAB THICKNESS	REINF. (2-WAY) SCHEDULE
SIZE: 3'-6" DIAMETER		
2'-15'	6" Precast	C6.5
0.5' < 30'	8"	A6
30'-40'	8"	B5.5
SIZE: 4'-0" DIAMETER		
≥0.5' < 19'	8"	A6
19' < 30'	8"	B5.5
30'-40'	8"	C6.5
SIZE: 5'-0" DIAMETER		
≥0.5' < 15'	8"	B5.5
15' < 26'	8"	C6.5
26' < 35'	8"	D7
35'-40'	8"	D4.5
SIZE: 6'-0" DIAMETER		
≥0.5' < 9'	8"	B5.5
9' < 15'	8"	C6.5
15' < 22'	8"	C3.5
22' < 30'	8"	D4.5
30'-40'	8"	E5
SIZE: 7'-0" DIAMETER		
≥0.5' < 8'	8"	C3.5
8' < 16'	8"	D4.5
16' < 23'	8"	E5
23' < 27'	8"	E3
27'-40'	8"	F3.5
SIZE: 8'-0" DIAMETER		
≥0.5' < 10'	8"	D4.5
10' < 16'	8"	E5
16' < 19'	8"	E3
19' < 29'	8"	F3.5
29'-40'	10"	F5
SIZE: 10'-0" DIAMETER		
≥0.5' < 12'	10"	D4.5
12' < 20'	10"	E5
20' < 28'	10"	F5
28'-40'	10"	G3.5
SIZE: 12'-0" DIAMETER		
≥0.5' < 8'	10"	D4.5
8' < 13'	10"	E5
13' < 18'	10"	F5
18' < 26'	10"	G3.5
26'-40'	12"	G3.5

SLAB AND WALL DESIGN TABLE NOTES

1. Size is the inside dimension(s) of a structure.
2. Slab reinforcement is appropriate for top, intermediate, and bottom slabs.
3. Bottom Slabs for precast 3'-6" x 3'-6" rectangular structures at 15' depth or less, may be 6" thick.
4. Slab depth is measured from finished grade to top of slab.
5. Wall depth is measured to the top of the bottom slab for boxes and to the top of the intermediate slab for risers.
6. Wall height is the distance between top of lower slab to bottom of upper slab. Maximum wall height is 12' for wall lengths exceeding 5', or 10' for wall lengths exceeding 12'.
7. Wall lengths exceeding 6'-0" require two layers of reinforcing (See Table 8) with 2" of cover from the horizontal bars to the inside and outside faces for each layer.
8. Wall lengths exceeding the dimensions or depths shown in Table 8, or 12'-0" diameter require a special design.
9. Wall thickness and reinforcing for rectangular structures is the same for both long and short sides.
10. Reinforcing schedules with larger areas of steel may be substituted for schedules with smaller bar or wire spacing, except that Schedule B10 may not be substituted for Schedule A6. See Index 201, Sheet 4 for allowable bar spacing adjustments when larger areas of reinforcing are substituted.

6/27/2014 5:44:37 AM

LAST REVISION 07/01/09	REVISION	DESCRIPTION:	FDOT 2015 DESIGN STANDARDS	STRUCTURE BOTTOMS TYPE J AND P	INDEX NO. 200	SHEET NO. 4 of 5

WALL DESIGNS - RECTANGULAR STRUCTURES (TABLE 8)

VERTICAL REINFORCING WALL DEPTH	VERTICAL SCHEDULE (Inside)	VERTICAL SCHEDULE (Outside)	HORIZONTAL REINFORCING WALL DEPTH	HORIZONTAL SCHEDULE (Inside)	HORIZONTAL SCHEDULE (Outside)	WALL THICKNESS
SIZE: 3'-6' & RISERS						
≥1.17' - 40'	A12		≥1.17' < 10'	B10		6"/8"
			10' < 18'	B5.5		6"/8"
			18' < 29'	C6.5		6"/8"
			29' - 40'	C3.5		6"/8"
SIZE: 4'-0"						
≥1.17' - 40'	A12		≥1.17' < 6'	B10		6"/8"
			6' < 10'	B5.5		6"/8"
			10' < 20'	C6.5		6"/8"
			20' < 28'	C3.5		6"/8"
			28' - 40'	D4.5		6"/8"
SIZE: 5'-0"						
≥1.17' - 40'	A12		≥1.17' < 5'	B5.5		6"/8"
			5' < 9'	C6.5		6"/8"
			9' < 15'	C3.5		6"/8"
			15' < 22'	D4.5		6"/8"
			22' - 40'	E3		8"
SIZE: 6'-0"						
≥1.17' < 26'	A12		≥1.17' < 9'	C3.5		6"/8"
			9' < 15'	D4.5		6"/8"
			15' < 26'	E3		8"
	Inside	Outside		Inside	Outside	
26' - 40'	A12	A12	26' - 40'	D7	D7	8"
SIZE: 7'-0"						
	Inside	Outside		Inside	Outside	
≥1.17' < 25'	A12	A12	≥1.17' < 7'	B10	B10	8"
26' - 40'	B10	B10	7' < 10'	B5.5	B5.5	8"
			10' < 20'	C6.5	C6.5	8"
			20' < 30'	D7	D7	8"
			30' - 40'	E5	E5	8"
SIZE: 8'-0"						
	Inside	Outside		Inside	Outside	
≥1.17' < 20'	A12	A12	≥1.17' < 6'	B5.5	B5.5	8"
20' - 40'	C6.5	C6.5	6' < 13'	C6.5	C6.5	8"
			13' < 22'	D7	D7	8"
			22' < 31'	E5	E5	8"
			31' - 40'	F5	F5	8"
SIZE: 9'-0"						
	Inside	Outside		Inside	Outside	
≥1.17' < 12'	A12	A12	≥1.17' < 8'	C6.5	C6.5	8"
12' < 28'	C6.5	C6.5	8' < 15'	D7	D7	8"
28' - 40'	D7	D7	15' < 23'	E5	E5	8"
			23' - 40'	F5	F5	8"
SIZE: 10'-0"						
	Inside	Outside		Inside	Outside	
≥1.17' < 10'	B10	B10	≥1.17' < 10'	D7	D7	8"
10' < 21'	C6.5	C6.5	10' < 17'	E5	E5	8"
21' < 26'	D7	D7	17' < 26'	F5	F5	8"
26' - 40'	C6.5	C6.5	26' - 40'	F5	F5	10"

VERTICAL REINFORCING WALL DEPTH	VERTICAL SCHEDULE (Inside)	VERTICAL SCHEDULE (Outside)	HORIZONTAL REINFORCING WALL DEPTH	HORIZONTAL SCHEDULE (Inside)	HORIZONTAL SCHEDULE (Outside)	WALL THICKNESS
SIZE: 10'-0" (Precast Only)						
26' - 40'	D7	D7	26' - 40'	F5	F5	9"
SIZE: 12'-0"						
≥1.17' < 14'	B10	B10	≥1.17' < 10'	C6.5	C6.5	10"
14' < 25'	C6.5	C6.5	10' < 17'	D7	D7	10"
25' - 40'	D7	D7	17' < 24'	E5	E5	10"
			24' - 40'	F5	F5	10"
SIZE: 12'-0" (Precast Only)						
≥1.17' < 12'	B10	B10	≥1.17' < 10'	D7	D7	9"
12' < 24'	C6.5	C6.5	10' < 17'	D4.5	D4.5	9"
24' - 40'	D7	D7	17' < 23'	E5	E5	9"
			23' < 32'	F5	F5	9"
			32' - 40'	G5	G5	9"
SIZE: 16'-0"						
≥1.17' < 11'	C6.5	C6.5	≥1.17' < 13'	D7	D7	10"
11' < 20'	D7	D7	13' < 20'	E5	E5	10"
20' < 28'	E5	E5	20' < 28'	F5	F5	10"
28' - 40'	F5	F5	28' - 40'	G5	G5	10"
SIZE: 16'-0" (Precast Only)						
≥1.17' < 10'	C6.5	C6.5	≥1.17' < 9'	D7	D7	9"
10' < 18'	D7	D7	9' < 13'	D4.5	D4.5	9"
18' < 25'	E5	E5	13' < 19'	E5	E5	9"
25' - 35'	F5	F5	19' < 27'	F5	F5	9"
			27' - 35'	G5	G5	9"
SIZE: 20'-0"						
≥1.17' < 10'	C6.5	C6.5	≥1.17' < 8'	D7	D7	10"
10' < 17'	D7	D7	8' < 12'	E5	E5	10"
17' - 30'	E5	E5	12' < 20'	F5	F5	10"
			20' - 30'	G5	G5	10"
SIZE: 20'-0" (Precast Only)						
≥1.17' < 8'	C6.5	C6.5	≥1.17' < 8'	D4.5	D4.5	9"
8' < 13'	D7	D7	8' < 12'	E5	E5	9"
13' - 25'	E5	E5	12' < 19'	F5	F5	9"
			19' - 25'	G5	G5	9"

REINFORCING SCHEDULE

SCHEDULE	GRADE 60 BARS OR 65 KSI & 70 KSI WELDED WIRE REINFORCING: GRADE 60 AREA (in.²/ft.)	MAXIMUM SPACING: GR 60 BARS (in.)	WWR EQUIV. AREA* 65 KSI (in.)	WWR EQUIV. AREA* 70 KSI (in.)
A12	0.20	12	8	8
A6	0.20	6	5	4½
B10	0.24	10	8	7½
B5.5	0.24	5½	5	4
C6.5	0.37	6½	6	5
C3.5	0.37	3½	3	2½
D7	0.53	7	6	5
D4.5	0.53	4½	4	3½
E5	0.73	5	4	4
E3	0.73	3	3	3
F5	1.06	5	4	4
F3.5	1.06	3½	3	3
G5	1.45	5	4	4
G.3.5	1.45	3½	3	3
H4	1.75	4	3	3

*Equivalent Area Welded Wire Reinforcing may be substituted in accordance with Index No. 201, Sheet 4.

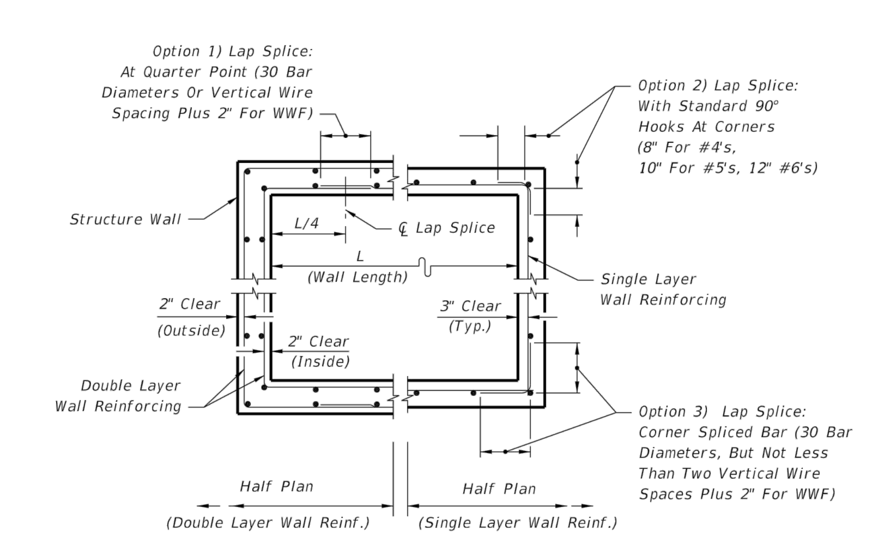

WALL REINFORCING SPLICE DETAILS
(ALTERNATE B)

6/27/2014 5:44:38 AM

LAST REVISION 01/01/12	REVISION	DESCRIPTION:	FDOT 2015 DESIGN STANDARDS	STRUCTURE BOTTOMS TYPE J AND P	INDEX NO. 200	SHEET NO. 5 of 5

PAUL E. SKIDMORE
LICENSE
NO. 39631
STATE OF FLORIDA
PROFESSIONAL ENGINEER

JOB NO. 506-100C
EPN 213
DATE 5-1-2015
DESIGNED RAH
DRAWN RAH
CHECKED PES
Q.C.
APP'D BY
REVISIONS
DATE
NO.

DESIGNED FOR
ASTURIA COMMUNITY DEVELOPMENT DISTRICT
605 PALENCIA CLUB DRIVE, ST. AUGUSTINE, FLORIDA 32095
PHONE: (904) 810-0500 - FAX: (904) 810-0525

PROJECT NAME
Asturia
PROMENADE PARKWAY

SHEET NAME
PAVING, GRADING, AND DRAINAGE DETAILS (3)

FLORIDA DESIGN CONSULTANTS, INC.
THINK IT. ACHIEVE IT.
3030 STARKEY BOULEVARD, NEW PORT RICHEY, FLORIDA 34655
PHONE: (800) 532 - 1047 FAX: (727) 848 - 3648 WWW.FLDESIGN.COM C.A. NO. 7421

SHEET 35 OF 38

©Copyright 2015 Florida Design Consultants, Inc. Drawings and concepts may not be used or reproduced without written permission.

K:\213\ProjData\ConstDocs\Plans\Promenade Parkway\213_PROMENADE-PPGDDETAILS-3.dwg - May 27, 2015 @ 12:15pm - asyrisko

1	2	3	4	5	6	7

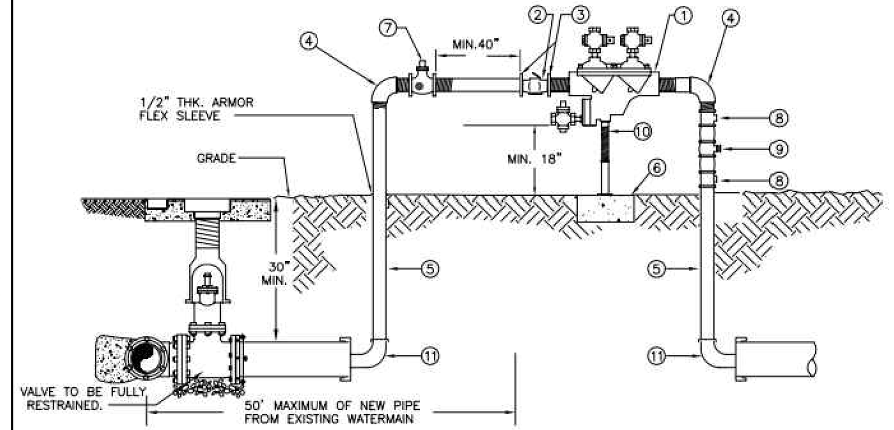

MATERIALS

ITEM	QUANT.	DESCRIPTION
1	1	2" BACKFLOW PREVENTER ASSEMBLY, REDUCED PRESSURE ZONE
2	1	2" METER FURNISHED BY PASCO COUNTY UTILITIES
3	2	BRASS–METER FLANGES OR ADAPTORS
4	2	2" ELBOWS – GALV. 90°
5	2	2" RISER – GALV.
6	*	CONCRETE SLAB
7	1	2" VALVE – BRASS OR S.S.
8	2	TEE/ VALVES – BRASS OR S.S.
9	1	2" GATE VALVE – BRASS OR S.S.
10	1	PIPE STAND (SUPPORT)
11	2	M.J. CAP WITH 2" TAP

NOTE:
- CONTRACTOR/CUSTOMER SHALL APPLY AT PASCO COUNTY UTILITIES CUSTOMER SERVICE FOR TEMPORARY WATER SERVICE AT LEAST THREE DAYS PRIOR TO REQUIRED SERVICE DATE.
- THE METER WILL BE FURNISHED, INSTALLED AND INITIAL READING TAKEN BY PASCO COUNTY UTILITIES. ALL FITTINGS, PIPING, VALVES AND MATERIALS INCLUDING THE PASCO COUNTY APPROVED REDUCED PRESSURE BACKFLOW PREVENTION DEVICE SHALL BE FURNISHED AND INSTALLED BY THE CONTRACTOR/CUSTOMER.
- CONTRACTOR/CUSTOMER FURNISHED REDUCED PRESSURE BACKFLOW PREVENTION DEVICE MUST BE INSTALLED BEFORE THE METER IS INSTALLED BY PASCO COUNTY UTILITIES. THE APPROVED BACKFLOW PREVENTION DEVICE SHALL BE TESTED AND CERTIFIED BY PASCO COUNTY UTILITIES CERTIFIED BACKFLOW PREVENTION TECHNICIAN AT TIME OF METER INSTALLATION.
- CONTRACTOR/CUSTOMER SHALL PROTECT THE JUMPER/METER ASSEMBLY FROM DAMAGE.
- CONTRACTOR/CUSTOMER IS RESPONSIBLE FOR BACTERIOLOGICAL TESTING AFTER CONNECTION OF TEMPORARY WATER SERVICE.
- TEMPORARY CONSTRUCTION JUMPER/METER ASSEMBLY SHALL NOT BE REMOVED UNTIL SYSTEM IS ACCEPTED AND DEPARTMENT OF HEALTH CERTIFICATION AND CLEARANCE FOR SERVICE FORM HAS BEEN RECEIVED BY PASCO COUNTY UTILITIES.
- WHEN THE NEW SYSTEM IS ACCEPTED AND THE FINAL METER READING TAKEN BY PASCO COUNTY, THE TEMPORARY CONSTRUCTION JUMPER/METER ASSEMBLY MUST BE COMPLETELY REMOVED FROM M.J CAP TO M.J. CAP AND A NEW WATER MAIN IS TO BE CHLORINATED AND INSTALLED COMPLETING THE FINAL CONNECTION.
- BY APPLYING FOR SERVICE, CONTRACTOR/CUSTOMER AGREES TO TAKE WATER SERVICE FROM PASCO COUNTY UTILITIES IN ACCORDANCE WITH THE APPROPRIATE RATE SCHEDULE AND IN ACCORDANCE WITH PASCO COUNTY UTILITIES RULES AND REGULATION.

CREATED 11/18/05
REVISED
TEMPORARY CONSTRUCTION WATER SERVICE
PROVIDED FOR INFORMATIONAL PURPOSES ONLY. NO MODIFICATIONS WITHOUT WRITTEN PCU APPROVAL
PASCO COUNTY UTILITIES
DETAIL 01

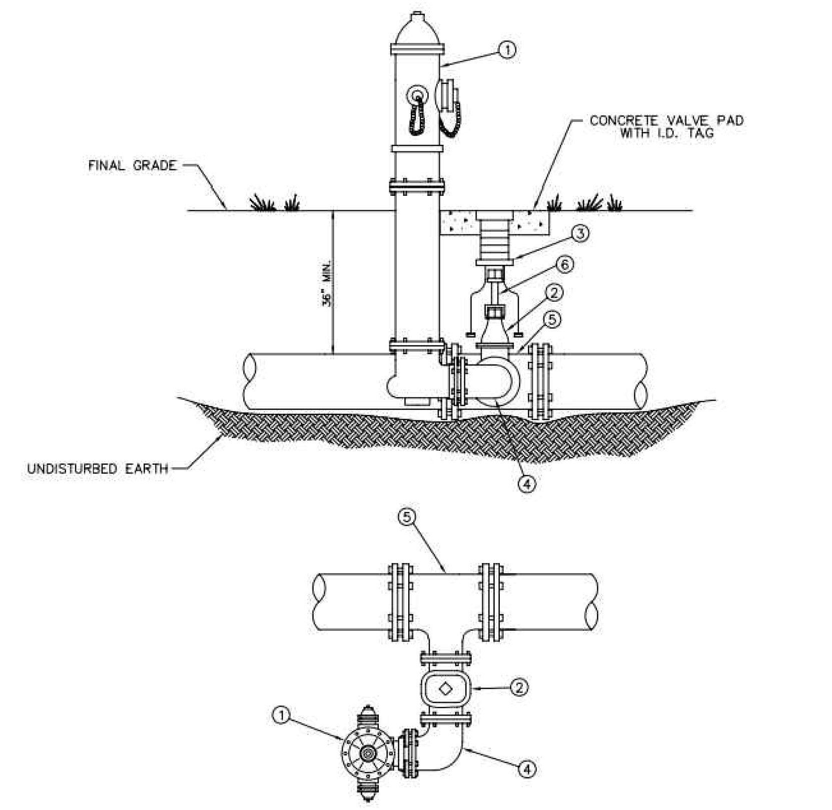

MATERIALS

ITEM	QUANT.	DESCRIPTION
1	1	HYDRANT, FIRE (5 1/4" VALVE MIN.), PAINTED YELLOW
2	1	6" VALVE, GATE, MJ RESILIENT WEDGE
3	1	BOX, VALVE SLIP TYPE
4	1	6" BEND, ANCHORING, D.I.
5	1	TEE, ANCHORING, MJ
6	*	VALVE EXTENSION ROD, AS NECESSARY (3' MAX. BELOW GRADE)

CREATED 02/24/03
REVISED
FIRE HYDRANT
PARALLEL TO THE MAIN
PROVIDED FOR INFORMATIONAL PURPOSES ONLY. NO MODIFICATIONS WITHOUT WRITTEN PCU APPROVAL
PASCO COUNTY UTILITIES
DETAIL 25

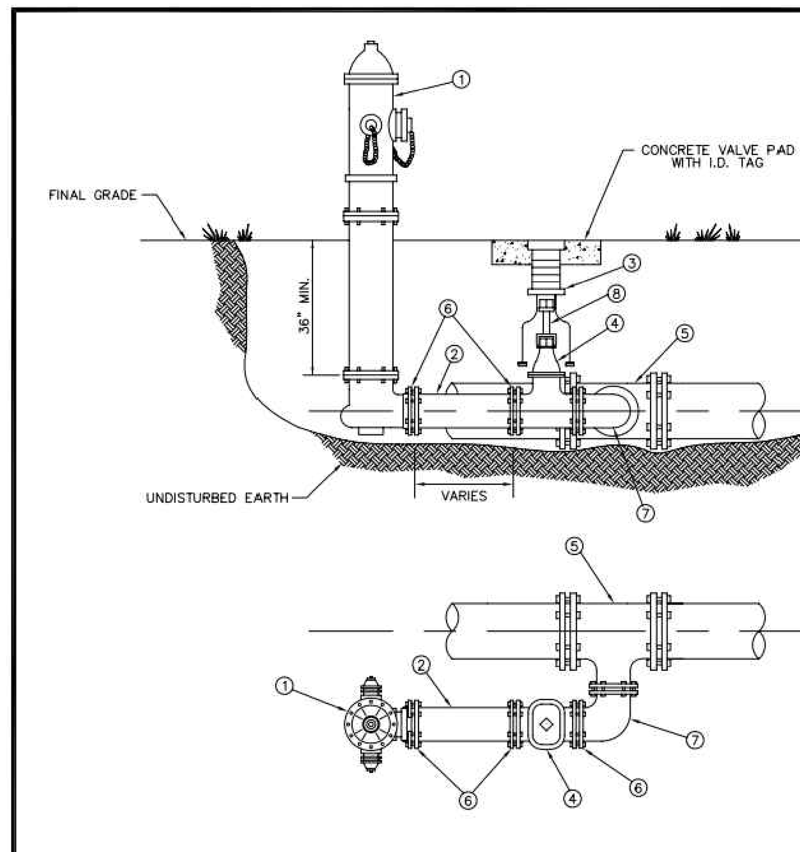

MATERIALS

ITEM	QUANT.	DESCRIPTION
1	1	HYDRANT, FIRE (5 1/4" VALVE MIN.), PAINTED YELLOW
2	*	6" PIPE, P.V.C. (DR–18)
3	1	BOX, VALVE SLIP TYPE
4	1	6" VALVE, GATE, M.J. RESILIENT WEDGE
5	1	TEE, ANCHORING, M.J.
6	*	6" RESTRAINER GLAND (MEGALUG)
7	1	BEND, ANCHORING, D.I.
8	*	VALVE EXTENSION ROD, AS NECESSARY (3' MAX. BELOW GRADE)

CREATED 02/24/03
REVISED
FIRE HYDRANT
PARALLEL TO THE MAIN
PROVIDED FOR INFORMATIONAL PURPOSES ONLY. NO MODIFICATIONS WITHOUT WRITTEN PCU APPROVAL
PASCO COUNTY UTILITIES
DETAIL 26

POTABLE WATER/SANITARY SEWER CLEARANCE REQUIREMENTS

Vertical Clearance at Crossings:

Gravity sewers or force mains crossing under water mains shall be laid to provide a minimum vertical distance of 18 inches between the invert of the upper pipe and the crown of the lower pipe. The crossing shall be arranged so that the sewer joints and water joints will be equidistant from the point of crossing with no less than 10 feet between any two joints. Where the minimum 18–in. separation cannot be maintained, one of the following methods of protection shall be utilized:

a. the sewer shall be encased in concrete for 20 feet centered on the crossing (10–ft. linear separation between joints);
b. the sewer shall be installed as D.I.P. for 20 feet centered on the crossing (10–ft. linear separation between joints);
c. the sewer shall be designed and constructed to the same specifications as water pipe, and shall be pressure tested at 150 psi to assure water tightness prior to backfilling; or
d. either the water main or the sewer line may be encased in a watertight carrier pipe which extends 10 feet on both sides of the crossing, measured perpendicular to the water main. The carrier pipe shall be of materials approved by the Department for use in water main construction.

One of the above descibed methods shall also be utilized when there is no alternative to sewers crossing over water mains. In such instances, adequate structural support shall be provided for the sewer to maintain line and grade.

Horizontal Separation Between Parallel Lines:

Gravity sewers or force mains shall be installed at least 10 feet horizontally from any existing or proposed water main. The distance shall be measured edge to edge. In cases where it is not practical to maintain a 10–ft. separation, the water main shall be installed in a separate trench or on an undisturbed earth shelf located on one side of the sewer and at an elevation so that the bottom of the water main is at least 18 inches above the top of the sewer, and the water and sewer joints shall be staggered.

If it is impossible to obtain proper horizontal and vertical separation as described above, both the water main and sewer must be constructed of slip–on or mechanical joint pipe complying with public water supply design standards of the Florida Department of Environmental Protection and be pressure tested to 150 psi to assure watertightness before backfilling.

POTABLE WATER/STORM SEWER CLEARANCE REQUIREMENTS

PARALLEL INSTALLATION

Water mains shall be laid at least 10 feet horizontally from any existing or proposed storm sewer. The distance shall be measured edge to edge. In cases where it is not practical to maintain a 10–ft. separation the water main shall be installed in a separate trench or on an undisturbed earth shelf located on one side of the storm sewer and at an elevation so that the bottom of the water main is at least 18 inches above the top of the storm sewer.

CROSSINGS

Water mains crossing storm sewers shall be laid to provide a minimum vertical distance of 18 inches between the outside of the water main and the outside of the storm sewer. This shall be the case where the water main is either above or below the storm sewer. At crossings, one full length of water pipe shall be located so both joints will be as far from the storm as possible. Special structural support for the water and storm sewer pipes may be required.

STORM SEWER MANHOLES

No water pipe shall pass through or come in contact with any part of a storm sewer manhole.

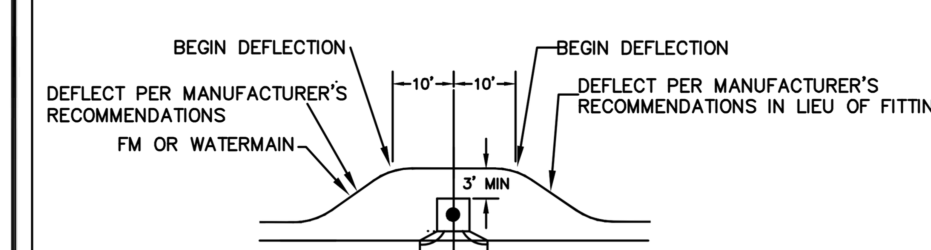

DETAIL "A"

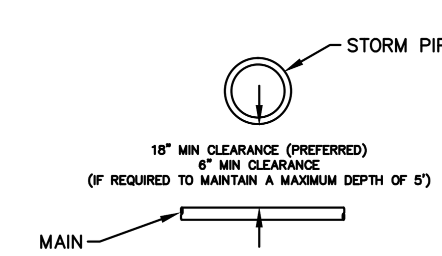

DETAIL "B"

P.V.C. PIPE RESTRAINT

NOTE: THRUST RESTRAINT AT FITTINGS AND VALVES SHALL BE BY USE OF EBBA IRON MEGALUG RESTRAINERS. THRUST RESTRAINT BETWEEN PIPE JOINTS SHALL BE BY EBBA IRON SERIES 1500 RESTRAINERS.

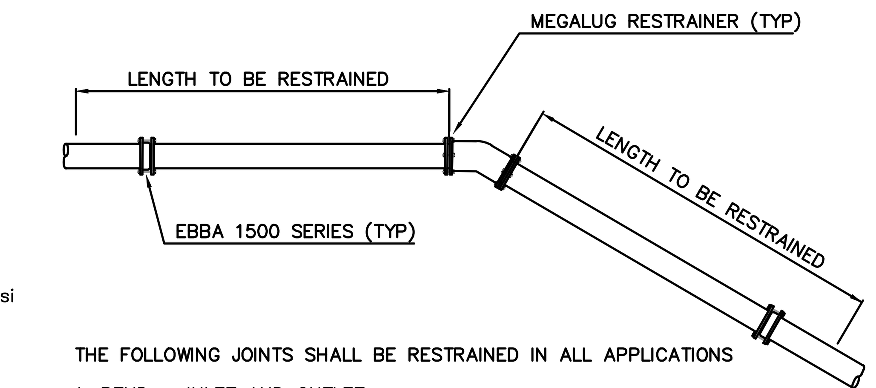

THE FOLLOWING JOINTS SHALL BE RESTRAINED IN ALL APPLICATIONS

1. BEND – INLET AND OUTLET
2. TEE – OUTLET BRANCH
3. OFFSETS – INLET AND OUTLET
4. CAPS
5. PLUGS
6. LAST TWO (2) JOINTS ON A DEAD END RUN (MIN 36')
7. LAST TWO (2) JOINTS ON A HYDRANT RUNOUT (MIN 36')

DUCTILE IRON PIPE RESTRAINT

THRUST RESTRAINT ON SLIPJOINT DUCTILE IRON PIPE SHALL BE U.S. PIPE FIELD LOCK GASKETS FOR TYTON JOINT PIPE OR AMERICAN FAST–GRIP GASKETS FOR AMERICAN FASTITE PIPE. THRUST RESTRAINT ON DUCTILE IRON FITTINGS SHALL BE PROVIDED BY THE USE OF MEGALUG RETAINERS AND MECHANICAL JOINT FITTINGS.

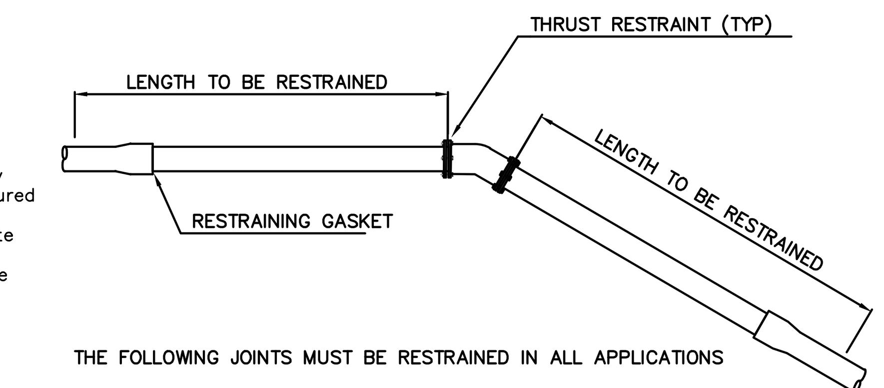

THE FOLLOWING JOINTS MUST BE RESTRAINED IN ALL APPLICATIONS

1. BEND – INLET AND OUTLET
2. TEE – OUTLET BRANCH
3. OFFSETS – INLET AND OUTLET
4. CAPS
5. PLUGS
6. DEAD END RUN
7. HYDRANT RUNOUT

ANGULAR DEFLECTION:

NOTE: NO DEFLECTION SHALL BE ALLOWED AT THE JOINT. PIPE CURVATURE SHOULD BE ACCOMPLISHED BY BENDING THE PIPE RATHER THAN DEFLECTING THE JOINTS. THE BENT PIPE IS ASSUMED TO FORM A TRUE ARC, I.E. THE PIPE IS CURVED UNIFORMLY THROUGHOUT ITS LENGTH AS FOLLOWS:

PIPE SIZE (INCHES)	MINIMUM ALLOWABLE RADIUS (FEET)
4	100*
6	150*
8	200*
10	250*
12	300*

*VERIFY WITH PIPE MANUFACTURER

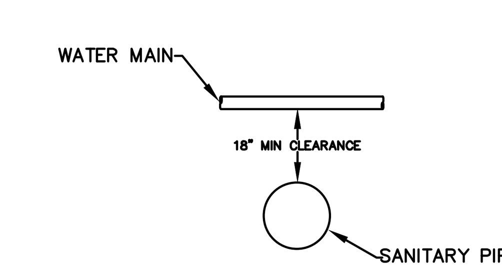

DETAIL "C"

PIPE RESTRAINT LENGTHS IN FEET COMMON FITTINGS

	WATER MAINS - TEST PRESSURE 150 PSI				
	FITTING TYPE				
PIPE SIZE	11-1/4°	22-1/2°	45°	90°	DEAD END
4"	2'	4'	8'	20'	45'
6"	3'	6'	12'	28'	63'
8"	4'	7'	15'	36'	82'
10"	4'	9'	18'	43'	98'
12"	5'	10'	21'	50'	116'
16"	6'	13'	26'	63'	148'
20"	7'	15'	31'	76'	179'
24"	9'	17'	36'	87'	208'

	FORCE MAINS - TEST PRESSURE 100 PSI				
	FITTING TYPE				
PIPE SIZE	11-1/4°	22-1/2°	45°	90°	DEAD END
4"	1'	3'	6'	13'	30'
6"	2'	4'	8'	19'	42'
8"	2'	5'	10'	24'	55'
10"	3'	6'	12'	29'	66'
12"	3'	7'	14'	34'	77'
16"	4'	8'	18'	42'	99'
20"	5'	10'	21'	50'	119'
24"	6'	11'	24'	58'	139'

RESTRAINT LENGTHS ARE MEASURED FROM THE CENTER LINE OF THE FITTING ALONG THE PIPE IN BOTH DIRECTIONS (EXCEPT DEAD ENDS).

CREATED 02/24/03
REVISED
RESTRAINED JOINT TABLE
COMMON FITTINGS
PROVIDED FOR INFORMATIONAL PURPOSES ONLY. NO MODIFICATIONS WITHOUT WRITTEN PCU APPROVAL
PASCO COUNTY UTILITIES
DETAIL 31

PIPE RESTRAINT LENGTHS IN FEET TEES (BRANCH SIDE)

	WATER MAINS - TEST PRESSURE 150 PSI								
	BRANCH SIZE								
RUN SIZE	3"	4"	6"	8"	10"	12"	16"	20"	24"
3"	6'	14'	30'	—	—	—	—	—	—
4"	2'	11'	28'	44'	—	—	—	—	—
6"	1'	2'	22'	40'	52'	—	—	—	—
8"	1'	1'	16'	35'	48'	62'	—	—	—
10"	1'	1'	10'	30'	44'	58'	83'	—	—
12"	1'	1'	3'	25'	40'	55'	80'	103'	—
16"	1'	1'	1'	14'	31'	48'	75'	98'	119'
20"	1'	1'	1'	2'	22'	40'	69'	94'	116'
24"	1'	1'	1'	1'	11'	31'	63'	89'	111'

RESTRAINT LENGTHS ARE MEASURED FROM THE CENTER LINE OF THE TEE ALONG THE BRANCH FOR THE DISTANCE INDICATED. A MINIMUM OF 5 FEET OF RESTRAINED PIPE MUST BE INSTALLED ON BOTH RUNS OF THE TEE. MEGALUG TYPE RESTRAINERS ARE REQUIRED ON ALL JOINTS.

CREATED 02/24/03
REVISED
RESTRAINED JOINT TABLE
TEES (BRANCH SIDE)
PROVIDED FOR INFORMATIONAL PURPOSES ONLY. NO MODIFICATIONS WITHOUT WRITTEN PCU APPROVAL
PASCO COUNTY UTILITIES
DETAIL 32

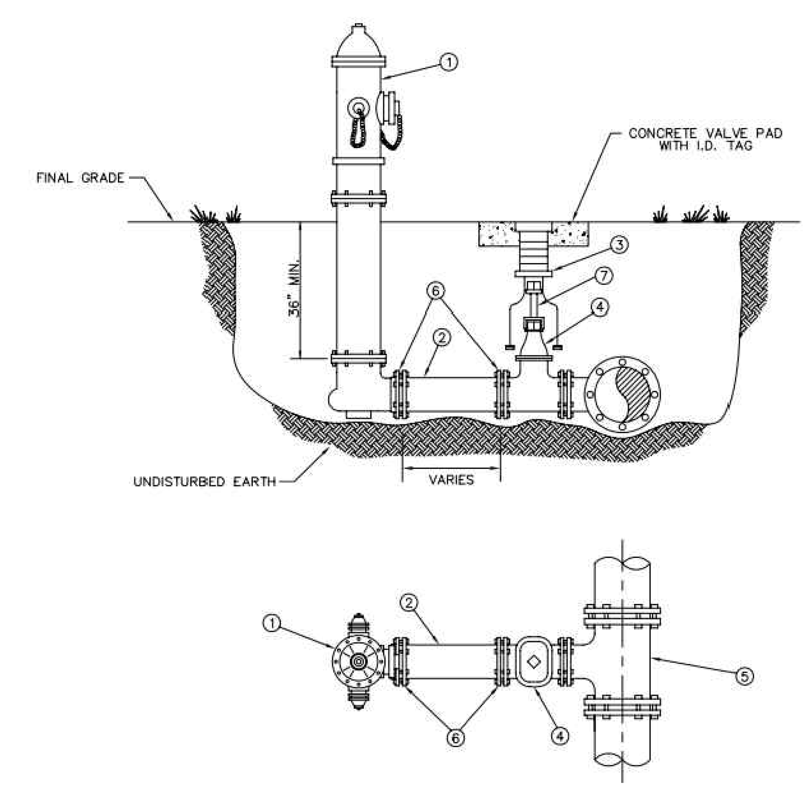

MATERIALS

ITEM	QUANT.	DESCRIPTION
1	1	HYDRANT, FIRE (5 1/4" VALVE MIN.), PAINTED YELLOW
2	*	6" PIPE, P.V.C. (DR–18)
3	1	BOX, VALVE SLIP TYPE
4	1	6" VALVE, GATE, M.J. RESILIENT WEDGE
5	1	TEE, ANCHORING, M.J.
6	*	6" RESTRAINER GLAND (MEGALUG)
7	*	VALVE EXTENSION ROD, AS NECESSARY (3' MAX. BELOW GRADE)

CREATED 02/24/03
REVISED
FIRE HYDRANT
PERPENDICULAR TO THE MAIN
PROVIDED FOR INFORMATIONAL PURPOSES ONLY. NO MODIFICATIONS WITHOUT WRITTEN PCU APPROVAL
PASCO COUNTY UTILITIES
DETAIL 27

PAUL E. SKIDMORE LICENSE NO. 39631 STATE OF FLORIDA PROFESSIONAL ENGINEER

JOB NO.	EPN	DATE	DESIGNED	DRAWN	CHECKED	Q.C.
506-100C	213	5-1-2015	RAH	RAH	PES	

NO.	DATE	REVISIONS	APP'D BY

DESIGNED FOR
ASTURIA COMMUNITY DEVELOPMENT DISTRICT
605 PALENCIA CLUB DRIVE, ST. AUGUSTINE, FLORIDA 32095
PHONE: (904) 810-0500 - FAX: (904) 810-0525

PROJECT NAME
Asturia | **PROMENADE PARKWAY**

SHEET NAME
UTILITY DETAILS (1)

FLORIDA DESIGN CONSULTANTS, INC.
THINK IT. ACHIEVE IT.
3030 STARKEY BOULEVARD, NEW PORT RICHEY, FLORIDA 34655
PHONE: (800) 532 - 1047 FAX: (727) 848 - 3648 WWW.FLDESIGN.COM C.A. NO. 7421

©Copyright 2015 Florida Design Consultants, Inc. Drawings and concepts may not be used or reproduced without written permission.

1	2	3	4	5	6	7

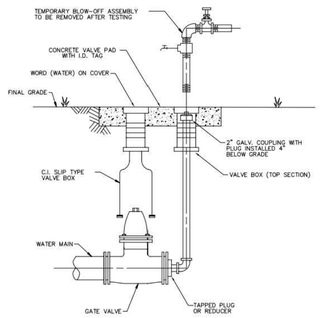

NOTES:
- MECHANICAL JOINTS/UNDERGROUND PIPING SHALL BE RESTRAINED AS SPECIFIED IN JOINT RESTRAINT TABLE (DETAIL 46)
- VALVE EXTENSION ROD SHALL BE UTILIZED, AS NECESSARY, SO THAT VALVE OPERATING NUT IS A MAXIMUM OF 3' BELOW GRADE.

CREATED 02/24/03 REVISED	PERMANENT BLOW-OFF DETAIL	PROVIDED FOR INFORMATIONAL PURPOSES ONLY. NO MODIFICATIONS WITHOUT WRITTEN PCU APPROVAL
	PASCO COUNTY UTILITIES	DETAIL 28

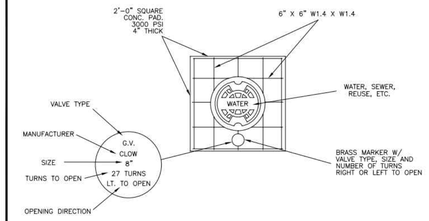

TYPICAL CONCRETE VALVE PAD

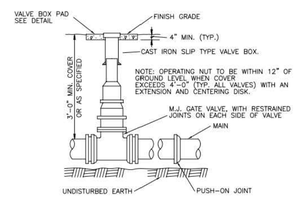

CREATED 02/24/03 REVISED	VALVE BOX DETAIL SLIP TYPE	PROVIDED FOR INFORMATIONAL PURPOSES ONLY. NO MODIFICATIONS WITHOUT WRITTEN PCU APPROVAL
	PASCO COUNTY UTILITIES	DETAIL 30

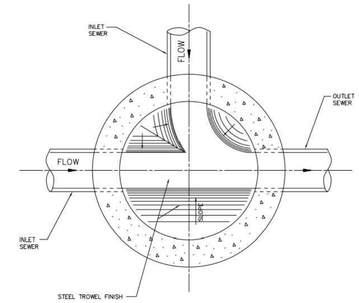

CREATED 02/24/03 REVISED	STANDARD MANHOLE (BENCH AND INVERTS)	PROVIDED FOR INFORMATIONAL PURPOSES ONLY. NO MODIFICATIONS WITHOUT WRITTEN PCU APPROVAL
	PASCO COUNTY UTILITIES	DETAIL 39

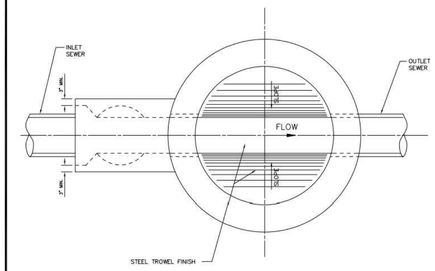

NOTE:
DROP MANHOLE TO BE USED WHEN THE DIFFERENCE BETWEEN INVERTS IS 2' OR MORE.

CREATED 02/24/03 REVISED	DROP MANHOLE (BENCH AND INVERTS)	PROVIDED FOR INFORMATIONAL PURPOSES ONLY. NO MODIFICATIONS WITHOUT WRITTEN PCU APPROVAL
	PASCO COUNTY UTILITIES	DETAIL 40

NOTE:
PRECAST CONCRETE SHALL ATTAIN A MINIMUM COMPRESSIVE STRENGTH OF 4,000 p.s.i. AT 28 DAYS.

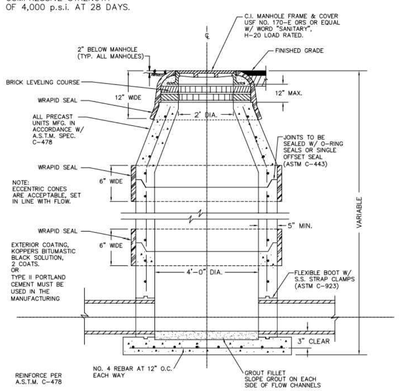

NOTE:
1. WRAPID SEAL MUST BE USED ON ALL JOINTS, CASTINGS AND RISER RINGS: ON ALL JOINTS ON AIR RELEASES, MANHOLES, GREASE/WATER, OIL/WATER SEPARATORS, AND WETWELLS.
2. WRAPID SEAL MUST BE USED IN ACCORDANCE WITH MANUFACTURES RECOMMENDATIONS.
3. PASCO COUNTY SHALL HAVE THE OPTION OF SPECIFYING THE TYPE OF INTERIOR LINING TO BE INSTALLED FOR EACH INDIVIDUAL MANHOLE.
4. PASCO COUNTY SHALL HAVE THE OPTION OF REQUIRING A NEGATIVE PRESSURE TEST PER ASTM C-1244
5. LIFT HOLES MUST NOT PENETRATE THE WALLS

CREATED 02/24/03 REVISED	STANDARD MANHOLE	PROVIDED FOR INFORMATIONAL PURPOSES ONLY. NO MODIFICATIONS WITHOUT WRITTEN PCU APPROVAL
	PASCO COUNTY UTILITIES	DETAIL 41

NOTE:
ECCENTRIC CONES ARE ACCEPTABLE, SET IN LINE WITH FLOW.

EXTERIOR COATING, KOPPERS BITUMASTIC BLACK SOLUTION, 2 COATS. OR TYPE II PORTLAND CEMENT MUST BE USED IN THE MANUFACTURING PROCESS

NOTE:
PRECAST CONCRETE SHALL ATTAIN A MINIMUM COMPRESSIVE STRENGTH OF 4,000 p.s.i. AT 28 DAYS.

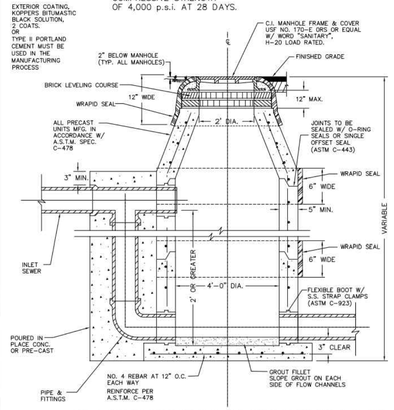

NOTE: 1. WRAPID SEAL MUST BE USED ON ALL JOINTS, CASTINGS AND RISER RINGS: ON ALL JOINTS ON AIR RELEASES, MANHOLES, GREASE/WATER, OIL/WATER SEPARATORS, AND WETWELLS.
2. WRAPID SEAL MUST BE USED IN ACCORDANCE WITH MANUFACTURES RECOMMENDATIONS.
3. PASCO COUNTY SHALL HAVE THE OPTION OF SPECIFYING THE TYPE OF INTERIOR LINING TO BE INSTALLED FOR EACH INDIVIDUAL MANHOLE.
4. PASCO COUNTY SHALL HAVE THE OPTION OF REQUIRING A NEGATIVE PRESSURE TEST PER ASTM C-1244.
5. LIFT HOLES MUST NOT PENETRATE THE WALLS

CREATED 02/24/03 REVISED	DROP MANHOLE	PROVIDED FOR INFORMATIONAL PURPOSES ONLY. NO MODIFICATIONS WITHOUT WRITTEN PCU APPROVAL
	PASCO COUNTY UTILITIES	DETAIL 42

NOTE:
PRECAST CONCRETE SHALL ATTAIN A MINIMUM COMPRESSIVE STRENGTH OF 4,000 p.s.i. AT 28 DAYS.

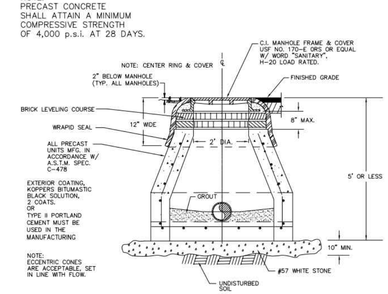

NOTE:
- A BEDDING OF CLASS I, CLASS II, OR CLASS III MATERIAL SHALL BE REQUIRED WHEN THE MANHOLE BOTTOM CANNOT BE INSTALLED ON UNDISTURBED SOIL OR IF THE NATIVE SOIL IS CLASS IV OR CLASS V MATERIAL.
- THIS TYPE OF CONSTRUCTION SHALL BE LIMITED TO DEPTHS OF (0-5) FEET.
- EXTERIOR COATING SHALL BE KOPPERS BITUMASTIC BLACK SOLUTION, 2 COATS.
- WRAPID SEAL MUST BE USED ON ALL JOINTS, CASTINGS AND RISER RINGS. WRAPID SEAL MUST BE USED IN ACCORDANCE WITH MANUFACTURER'S RECOMMENDATIONS.
- PASCO COUNTY SHALL HAVE THE OPTION OF SPECIFYING THE TYPE OF INTERIOR LINING TO BE INSTALLED FOR EACH INDIVIDUAL MANHOLE.
- PASCO COUNTY SHALL HAVE THE OPTION OF REQUIRING A NEGATIVE PRESSURE TEST PER ASTM C-1244
- LIFT HOLES MUST NOT PENETRATE THE WALLS

CREATED 02/24/03 REVISED	MANHOLE SHALLOW CONSTRUCTION (CLOSED BOTTOM)	PROVIDED FOR INFORMATIONAL PURPOSES ONLY. NO MODIFICATIONS WITHOUT WRITTEN PCU APPROVAL
	PASCO COUNTY UTILITIES	DETAIL 43

PAUL E. SKIDMORE
LICENSE NO. 39631
STATE OF FLORIDA
PROFESSIONAL ENGINEER

JOB NO.	506-100C		
SCALE	213		
DATE	5-1-2015		
DRAWN	RAH		
CHECKED	RAH		
DESIGNED	PES		
QC			

NO.	DATE	REVISIONS	APP'D

DESIGNED FOR
ASTURIA COMMUNITY DEVELOPMENT DISTRICT
605 PALMOCK CLUB DRIVE, ST. AUGUSTINE, FLORIDA 32095
PHONE: (904) 810-0500 - FAX: (904) 810-0505

PROJECT NAME: Asturia | **PROMENADE PARKWAY**

SHEET NAME: **UTILITY DETAILS (2)**

FLORIDA DESIGN CONSULTANTS, INC.
THINK IT. ACHIEVE IT.
3030 STARKEY BOULEVARD, NEW PORT RICHEY, FLORIDA 34655
PHONE: (800) 532 - 1047 FAX: (727) 848 - 3648 WWW.FLDESIGN.COM C.A. NO. 7421

SHEET 37 OF 38

© Copyright 2015 Florida Design Consultants, Inc. Drawings and concepts may not be used or reproduced without written permission.

K:\213\Proj\Data\ConstDocs\Plans\Promenade Parkway\213_PROMENADE-PUTILSETAILS-2.dwg - May 27, 2015 @ 12:15pm - eyplus

NOTES: -LOOSE SOIL OR SELECT MATERIAL IS NATIVE SOIL EXCAVATED FROM THE TRENCH FREE OF ROCKS AND FOREIGN MATERIAL.
-COMMON FILL TO BE PLACED AND COMPACTED IN 12" LAYERS. ROLLING EQUIPMENT SHALL NOT BE USED FOR COMPACTION UNTIL A MINIMUM OF 18" OF COMMON FILL HAS BEEN PLACED AND COMPACTED OVER THE PIPE. THREE FEET OF FILL SHALL BE PLACED BEFORE A HYDROHAMMER MAY BE USED FOR COMPACTION.

NTS

CREATED 02/24/03 REVISED	PIPE LAYING CONDITIONS STANDARD UNPAVED AREAS	PROVIDED FOR INFORMATIONAL PURPOSES ONLY. NO MODIFICATIONS WITHOUT WRITTEN PCU APPROVAL
	PASCO COUNTY UTILITIES	DETAIL 35

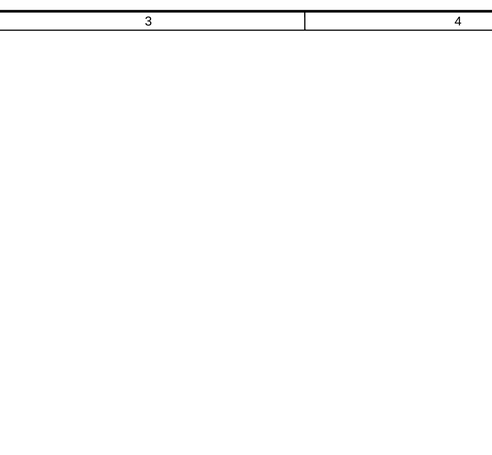

NOTE: -SELECT MATERIAL IS NATIVE SOIL EXCAVATED FROM THE TRENCH FREE OF ROCKS AND FOREIGN MATERIAL.
-COMPACTION TO TOP OF PILE IS TO BE APPROXIMATELY 90% STANDARD PROCTOR, AASHTO T-99.
-EXISTING CONCRETE/ASPHALT PAVEMENT SURFACE AND BASE TO BE CUT SQUARE WITH CONCRETE SAW.

NTS

CREATED 03/06/03 REVISED	PIPE LAYING CONDITIONS FLOWABLE FILL BACKFILL STANDARD EXISTING PAVED AREAS & ROADWAYS	PROVIDED FOR INFORMATIONAL PURPOSES ONLY. NO MODIFICATIONS WITHOUT WRITTEN PCU APPROVAL
	PASCO COUNTY UTILITIES	DETAIL 36

PAUL E. SKIDMORE
LICENSE
NO. 39631
STATE OF
FLORIDA
PROFESSIONAL ENGINEER

JOB NO.	EPR	DATE	DESIGNED	DRAWN	REVIEWED	QC
506-100C	213	5-1-2015		RAH		PES

NO.	DATE	REVISIONS	APP'D

DESIGNED FOR:
ASTURIA COMMUNITY DEVELOPMENT DISTRICT
605 PALMOA CLUB DRIVE, ST. AUGUSTINE, FLORIDA 32095
PHONE: (904) 810-0500 - FAX: (904) 810-0525

PROJECT NAME: Asturia | **PROMENADE PARKWAY**

SHEET NAME: **UTILITY DETAILS (3)**

FLORIDA DESIGN CONSULTANTS, INC.
THINK IT. ACHIEVE IT.
3030 STARKEY BOULEVARD, NEW PORT RICHEY, FLORIDA 34655
PHONE: (800) 532 - 1047 FAX: (727) 848 - 3648 WWW.FLDESIGN.COM C.A. NO. 7421

SHEET 38 OF 38

© Copyright 2015 Florida Design Consultants, Inc. Drawings and concepts may not be used or reproduced without written permission.

K:\213\Proj\Data\ConstDocs\Plans\Promenade Parkway\213_PROMENADE-PUTILDETAILS-3.dwg - May 27, 2015 @ 12:16pm - ayrisko

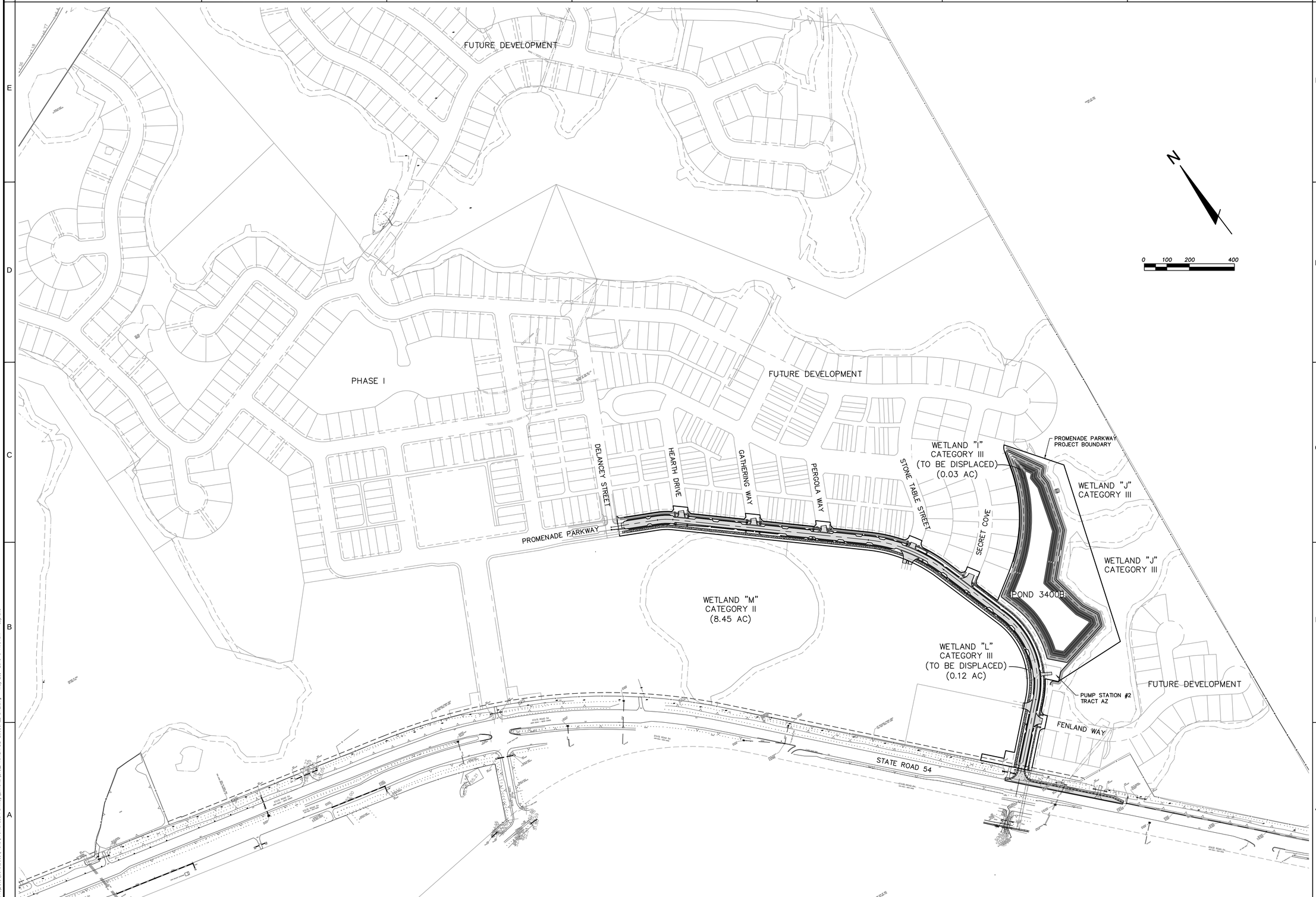

PAUL E. SKIDMORE
LICENSE
NO. 39631
STATE OF FLORIDA
PROFESSIONAL ENGINEER

JOB NO.	SCALE	DATE	DESIGNED	DRAWN	CHECKED	QC
506-100C	213	5-1-2015		RAH		PES

NO.	DATE	REVISIONS	APP'D

DESIGNED FOR
ASTURIA COMMUNITY DEVELOPMENT DISTRICT
605 PALMONA CLUB DRIVE, ST. AUGUSTINE, FLORIDA 32095
PHONE: (904) 819-0500 FAX: (904) 819-0525

PROJECT NAME
Asturia | **PROMENADE PARKWAY**

SHEET NAME
PROJECT SITE PLAN

FLORIDA DESIGN CONSULTANTS, INC.
THINK IT. ACHIEVE IT.
3030 STARKEY BOULEVARD, NEW PORT RICHEY, FLORIDA 34655
PHONE: (800) 532 - 1047 FAX: (727) 848 - 3648 WWW.FLDESIGN.COM C.A. NO. 7421

SHEET 1 OF 1

© Copyright 2015 Florida Design Consultants, Inc. Drawings and concepts may not be used or reproduced without written permission.

K:\213\Proj Data\ConstDocs\Plans\Promenade Parkway\Exhibits\213_PROMENADE-200SCALE SITE.dwg - May 29, 2015 @ 11:04am - dayrlee

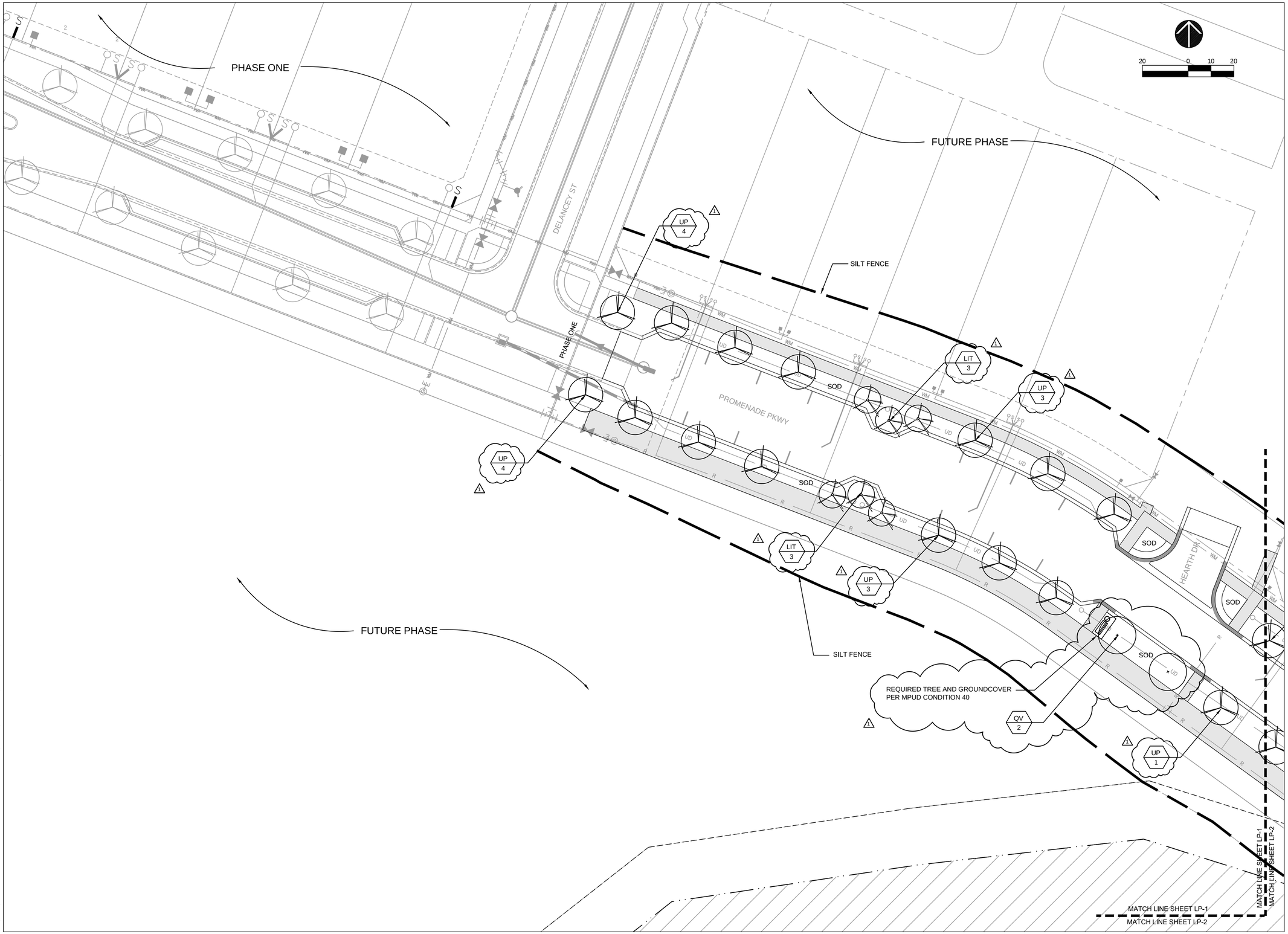

P:\113\113055-01-BEHNKE RANCH-SITE PLANNING\CADD\CURRENT\PROMENADE\113055.01-Asturia-LANDSCAPE PROMENADE.dwg Aug 14, 2015 - 1:50pm

PROSSER™
Community - Management - Energy - Relationships

13901 Sutton Park Drive South, Suite 200
Jacksonville, Florida 32224-0229

Office 904.739.3655
Fax 904.730.3413

www.prosserinc.com

Florida Certificate of Authorization
Number: 00004050

Hines

Asturia

PROMENADE

KEY PLAN

DATE : MAY 12, 2014
PROJECT NO. : 113055.01
DESIGNED BY : SB
DRAWN BY : BHK
SCALE : AS NOTED

No.	Date	Revision
1	5-26-15	PASCO CNTY SUBMITTAL
2	8-12-15	PASCO CNTY SUBMITTAL

THIS DRAWING NOT RELEASED FOR CONSTRUCTION UNLESS SO NOTED ABOVE

SHEET TITLE

LANDSCAPE PLAN

SHAWN BLISS
RLA. NO. 1548
DATE:

LP-1
SHEET

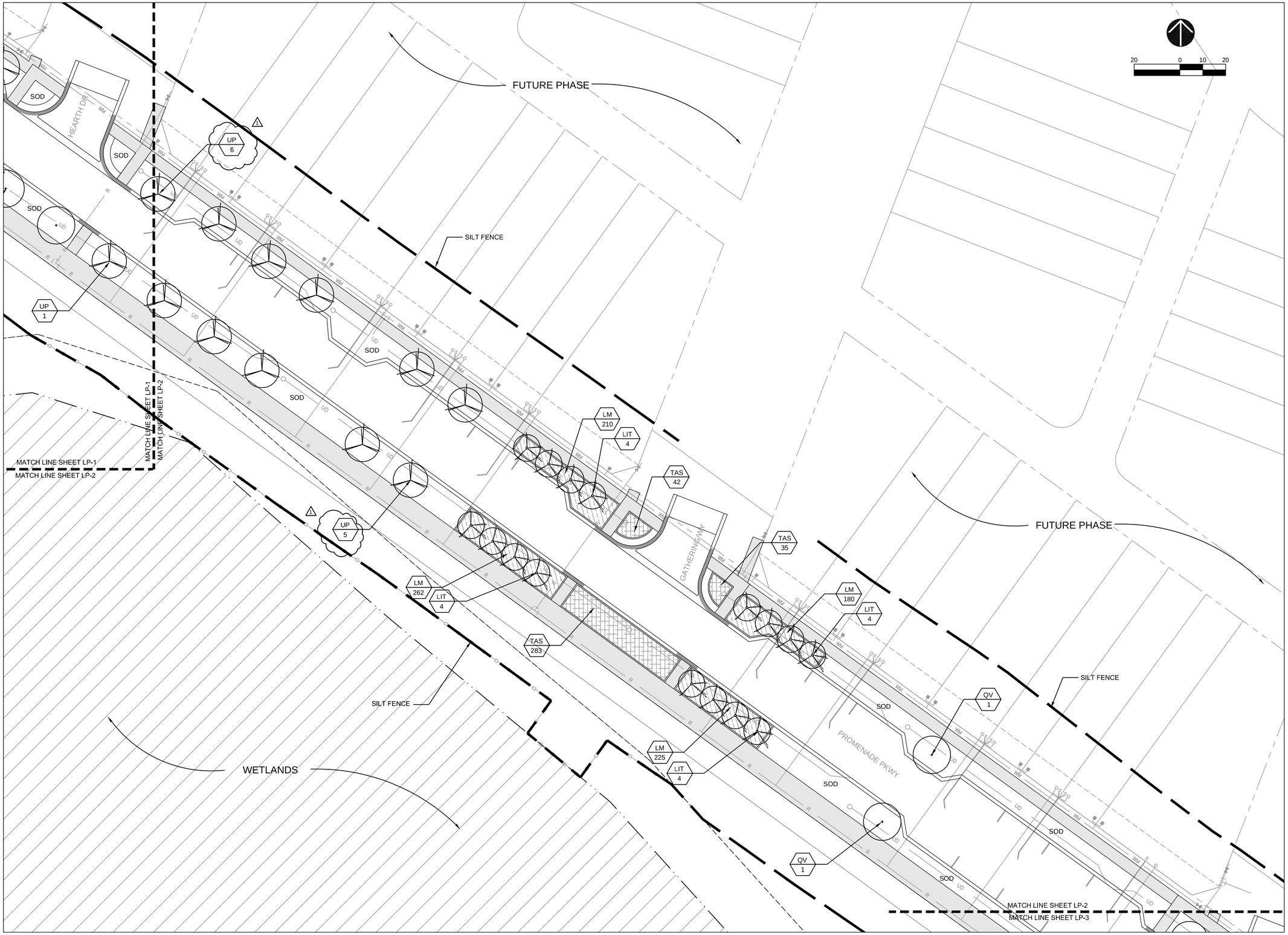

P:\113\113055-01-BEHNKE RANCH-SITE PLANNING\CADD\CURRENT\PROMENADE\113055.01-Asturia-LANDSCAPE PROMENADE.dwg Aug 14, 2015 - 1:32pm

PROSSER™
Community - Management - Energy - Relationships

13901 Sutton Park Drive South, Suite 200
Jacksonville, Florida 32224-0229

Office 904.739.3655
Fax 904.730.3413

www.prosserinc.com

Florida Certificate of Authorization
Number: 00004050

Hines

Asturia
PROMENADE

KEY PLAN

DATE : MAY 12, 2014
PROJECT NO. : 113055.01
DESIGNED BY : SB
DRAWN BY : BHK
SCALE : AS NOTED

No.	Date	Revision
1	5-26-15	PASCO CNTY SUBMITTAL
2	8-12-15	PASCO CNTY SUBMITTAL

THIS DRAWING NOT RELEASED FOR CONSTRUCTION UNLESS SO NOTED ABOVE

SHEET TITLE

LANDSCAPE PLAN

SHAWN BLISS
R.L.A. NO. 1548
DATE:

LP-2
SHEET

P:\113\113055-01-BEHNKE RANCH-SITE PLANNING\CADD\CURRENT\PROMENADE\113055.01-Asturia-LANDSCAPE PROMENADE.dwg Aug 14, 2015 - 1:32pm

PROSSER™
Community - Management - Energy - Relationships

13901 Sutton Park Drive South, Suite 200
Jacksonville, Florida 32224-0229

Office 904.739.3655
Fax 904.730.3413

www.prosserinc.com

Florida Certificate of Authorization
Number: 00004050

Hines

Asturia

PROMENADE

KEY PLAN

DATE : MAY 12, 2014

PROJECT NO. : 113055.01

DESIGNED BY : SB

DRAWN BY : BHK

SCALE : AS NOTED

No.	Date	Revision
1	5-26-15	PASCO CNTY SUBMITTAL
2	8-12-15	PASCO CNTY SUBMITTAL

THIS DRAWING NOT RELEASED FOR CONSTRUCTION UNLESS SO NOTED ABOVE

SHEET TITLE

LANDSCAPE PLAN

SHAWN BLISS
R.L.A. NO. 1548
DATE:

LP-3
SHEET

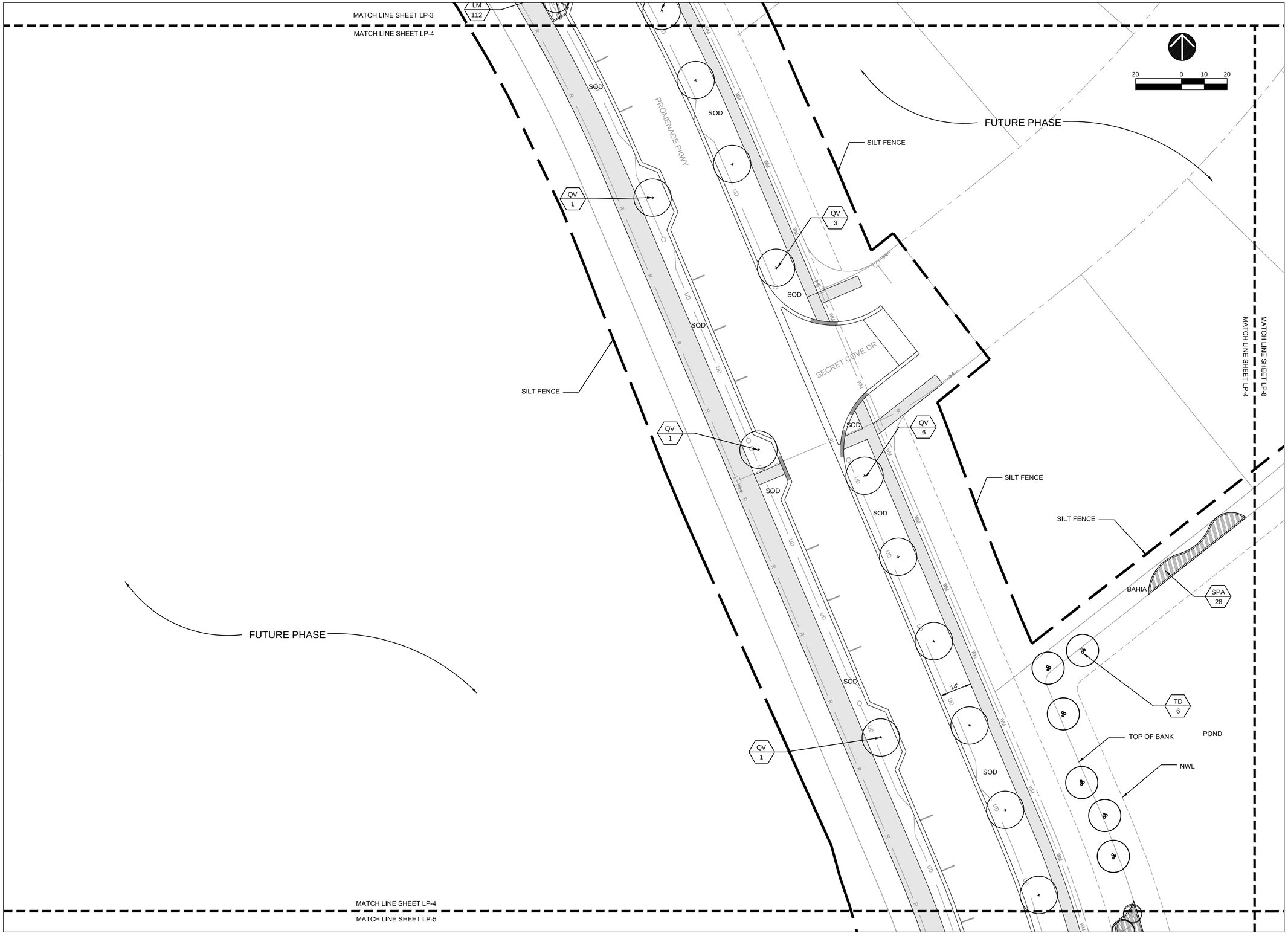

P:\113\113055-01-BEHNKE RANCH-SITE PLANNING\CADD\CURRENT\PROMENADE\113055.01-Asturia-LANDSCAPE PROMENADE.dwg Aug 14, 2015 - 1:33pm

PROSSER™
Community - Management - Energy - Relationships

13901 Sutton Park Drive South, Suite 200
Jacksonville, Florida 32224-0229

Office 904.739.3655
Fax 904.730.3413

www.prosserinc.com

Florida Certificate of Authorization
Number: 00004050

Hines

Asturia

PROMENADE

KEY PLAN

DATE : MAY 12, 2014

PROJECT NO. : 113055.01

DESIGNED BY : SB

DRAWN BY : BHK

SCALE : AS NOTED

No.	Date	Revision
1	5-26-15	PASCO CNTY SUBMITTAL
2	8-12-15	PASCO CNTY SUBMITTAL

THIS DRAWING NOT RELEASED FOR CONSTRUCTION UNLESS SO NOTED ABOVE

SHEET TITLE

LANDSCAPE PLAN

SHAWN BLISS
R.L.A. NO. 1548
DATE:

LP-4
SHEET

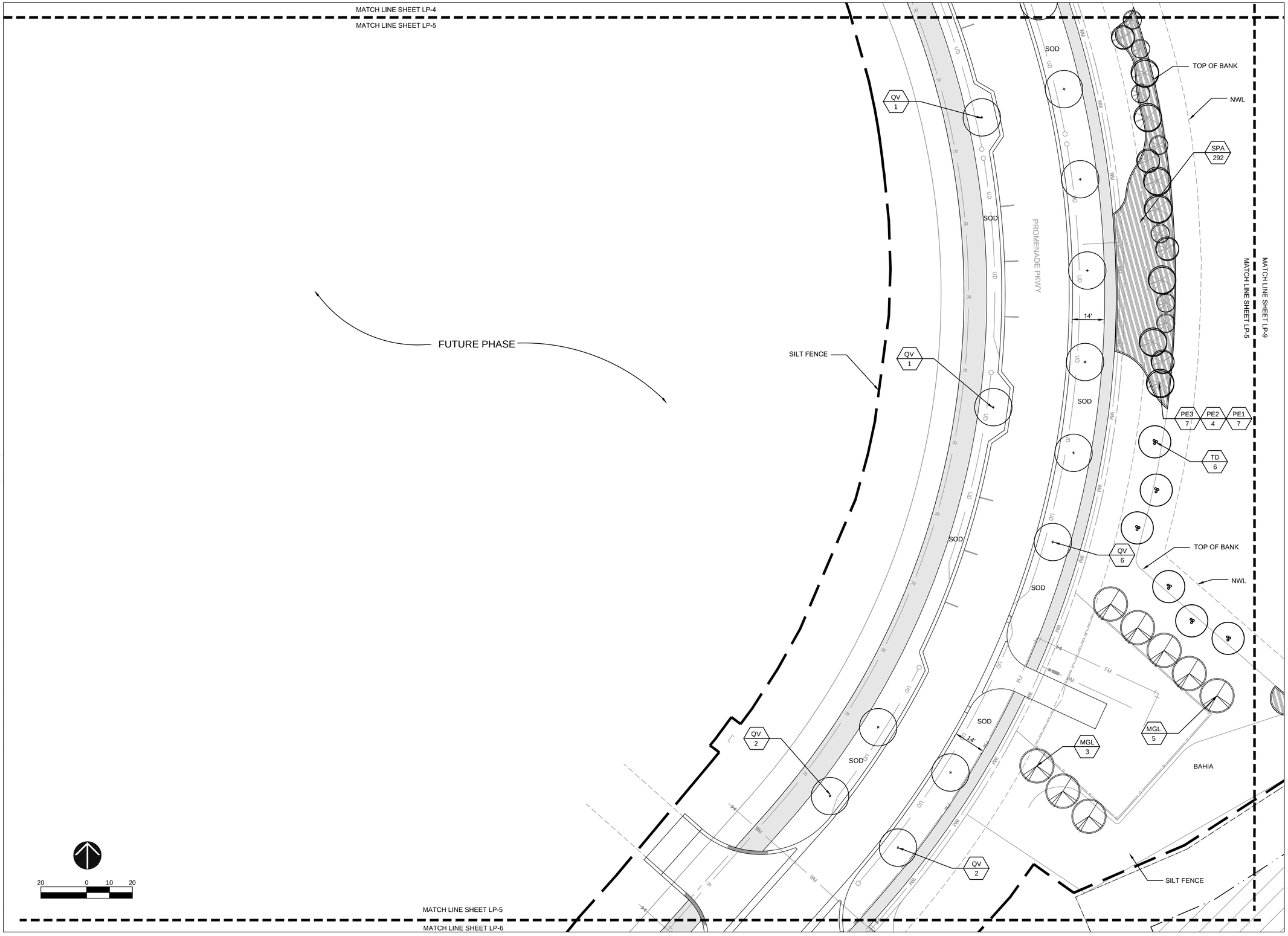

P:\113\113055-01-BEHNKE RANCH-SITE PLANNING\CADD\CURRENT\PROMENADE\113055.01-Asturia-LANDSCAPE PROMENADE.dwg Aug 14, 2015 - 1:33pm

PROSSER™
Community - Management - Energy - Relationships

13901 Sutton Park Drive South, Suite 200
Jacksonville, Florida 32224-0229

Office 904.739.3655
Fax 904.730.3413

www.prosserinc.com

Florida Certificate of Authorization
Number: 00004050

Hines

Asturia

PROMENADE

KEY PLAN

DATE : MAY 12, 2014
PROJECT NO. : 113055.01
DESIGNED BY : SB
DRAWN BY : BHK
SCALE : AS NOTED

No.	Date	Revision
1	5-26-15	PASCO CNTY SUBMITTAL
2	8-12-15	PASCO CNTY SUBMITTAL

THIS DRAWING NOT RELEASED FOR CONSTRUCTION UNLESS SO NOTED ABOVE

SHEET TITLE

LANDSCAPE PLAN

SHAWN BLISS
R.L.A. NO. 1548
DATE:

LP-5
SHEET

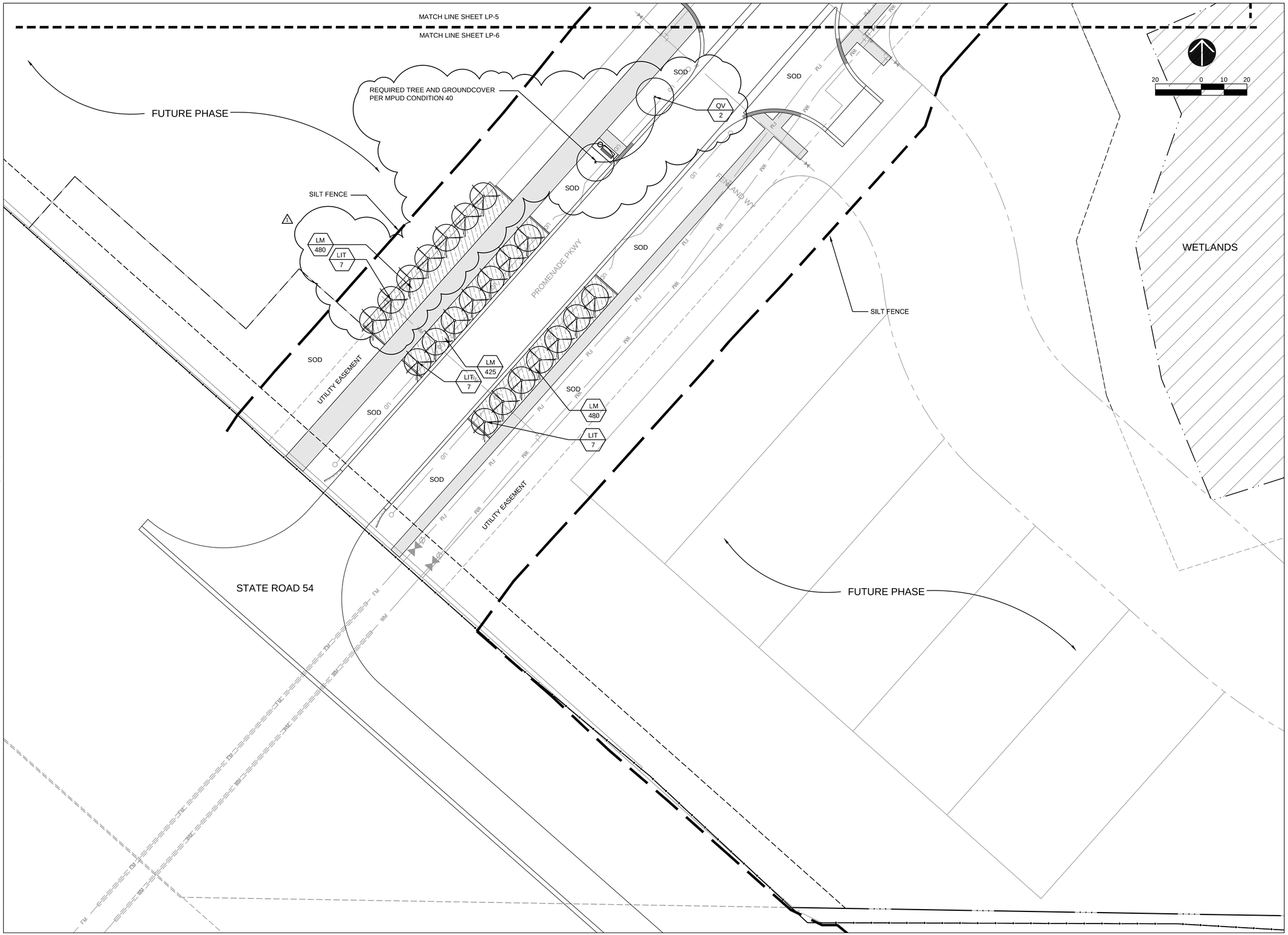

PROSSER™
Community - Management - Energy - Relationships

13901 Sutton Park Drive South, Suite 200
Jacksonville, Florida 32224-0229

Office 904.739.3655
Fax 904.730.3413

www.prosserinc.com

Florida Certificate of Authorization
Number: 00004050

Hines

Asturia
PROMENADE

KEY PLAN

DATE : MAY 12, 2014
PROJECT NO. : 113055.01
DESIGNED BY : SB
DRAWN BY : BHK
SCALE : AS NOTED

No.	Date	Revision
1	5-26-15	PASCO CNTY SUBMITTAL
2	8-12-15	PASCO CNTY SUBMITTAL

THIS DRAWING NOT RELEASED FOR CONSTRUCTION UNLESS SO NOTED ABOVE

SHEET TITLE

LANDSCAPE PLAN

SHAWN BLISS
R.L.A. NO. 1548
DATE:

LP-6
SHEET

P:\113\113055-01-BEHNKE RANCH-SITE PLANNING\CADD\CURRENT\PROMENADE\113055.01-Asturia-LANDSCAPE PROMENADE.dwg Aug 14, 2015 - 1:34pm

P:\113\113055-01-BEHNKE RANCH-SITE PLANNING\CADD\CURRENT\PROMENADE\113055.01-Asturia-LANDSCAPE PROMENADE.dwg Aug 14, 2015 - 1:34pm

PROSSER™
Community - Management - Energy - Relationships

13901 Sutton Park Drive South, Suite 200
Jacksonville, Florida 32224-0229

Office 904.739.3655
Fax 904.730.3413

www.prosserinc.com

Florida Certificate of Authorization
Number: 00004050

Hines

Asturia

PROMENADE

KEY PLAN

DATE : MAY 12, 2014

PROJECT NO. : 113055.01

DESIGNED BY : SB

DRAWN BY : BHK

SCALE : AS NOTED

No.	Date	Revision
1	5-26-15	PASCO CNTY SUBMITTAL
2	8-12-15	PASCO CNTY SUBMITTAL

THIS DRAWING NOT RELEASED FOR CONSTRUCTION UNLESS SO NOTED ABOVE

SHEET TITLE

LANDSCAPE PLAN

SHAWN BLISS
R.L.A. NO. 1548
DATE:

LP-7
SHEET

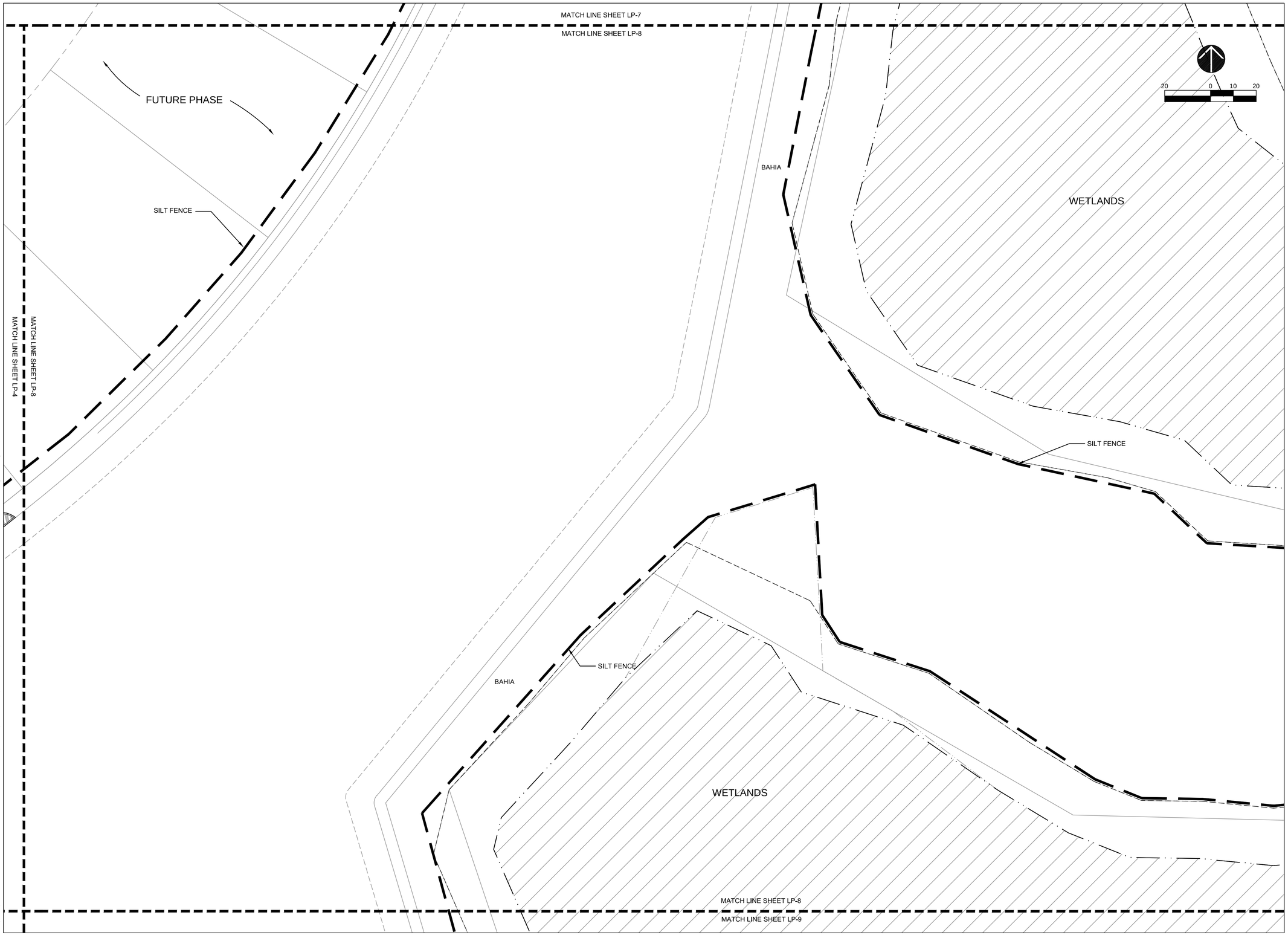

P:\113\113055-01-BEHNKE RANCH-SITE PLANNING\CADD\CURRENT\PROMENADE\113055.01-Asturia-LANDSCAPE PROMENADE.dwg Aug 14, 2015 - 1:35pm

PROSSER™
Community - Management - Energy - Relationships

13901 Sutton Park Drive South, Suite 200
Jacksonville, Florida 32224-0229

Office 904.739.3655
Fax 904.730.3413

www.prosserinc.com

Florida Certificate of Authorization
Number: 00004050

Hines

Asturia
PROMENADE

KEY PLAN

DATE : MAY 12, 2014
PROJECT NO. : 113055.01
DESIGNED BY : SB
DRAWN BY : BHK
SCALE : AS NOTED

No.	Date	Revision
1	5-26-15	PASCO CNTY SUBMITTAL
2	8-12-15	PASCO CNTY SUBMITTAL

THIS DRAWING NOT RELEASED FOR CONSTRUCTION UNLESS SO NOTED ABOVE

SHEET TITLE

LANDSCAPE PLAN

SHAWN BLISS
R.L.A. NO. 1548
DATE:

LP-8
SHEET

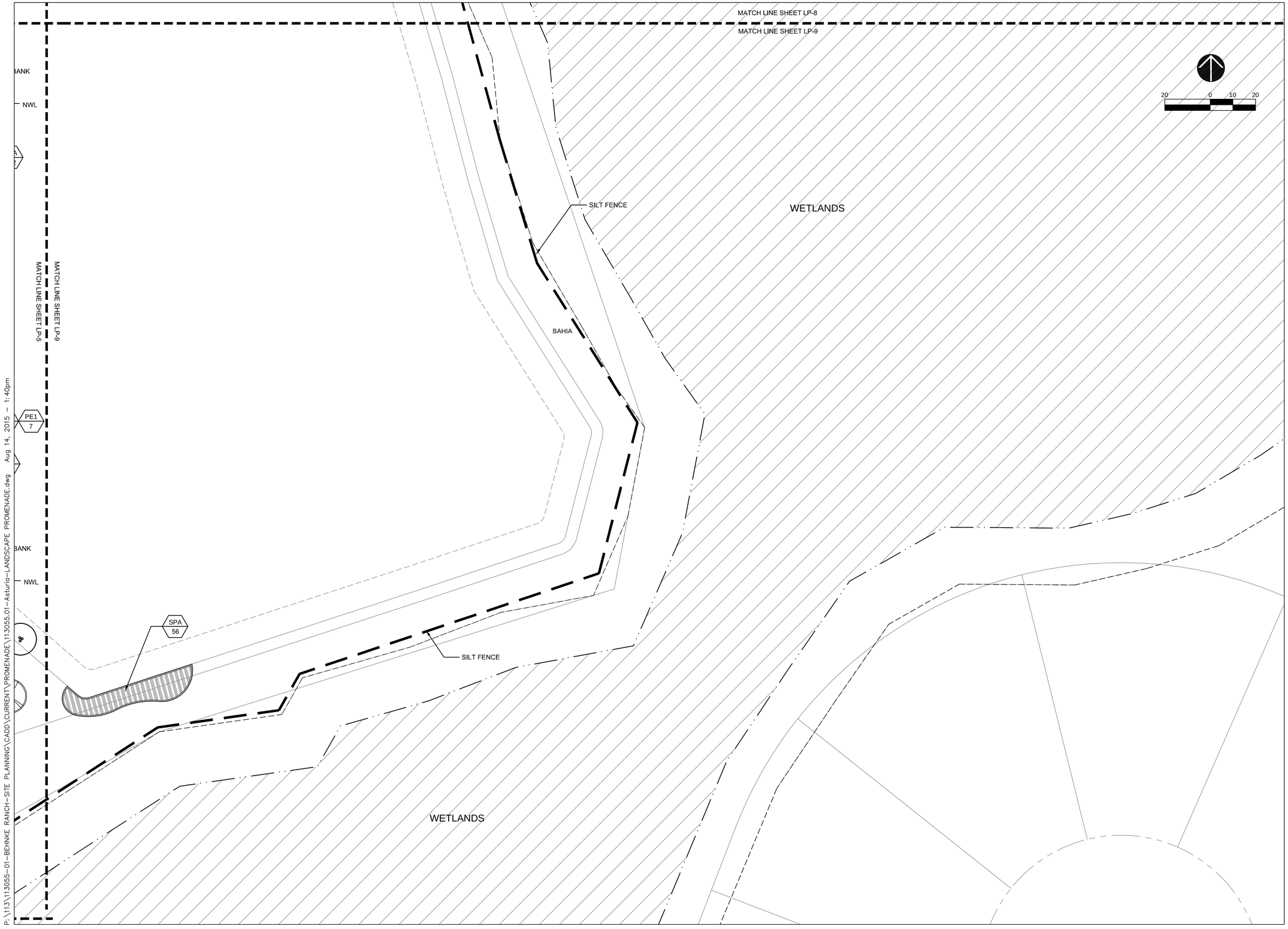

P:\113\113055-01-BEHNKE RANCH-SITE PLANNING\CADD\CURRENT\PROMENADE\113055.01-Asturia-LANDSCAPE PROMENADE.dwg Aug 14, 2015 - 1:40pm

PROSSER™
Community - Management - Energy - Relationships

13901 Sutton Park Drive South, Suite 200
Jacksonville, Florida 32224-0229

Office 904.739.3655
Fax 904.730.3413

www.prosserinc.com

Florida Certificate of Authorization
Number: 00004050

Hines

Asturia
PROMENADE

KEY PLAN

DATE : MAY 12, 2014
PROJECT NO. : 113055.01
DESIGNED BY : SB
DRAWN BY : BHK
SCALE : AS NOTED

No.	Date	Revision
1	5-26-15	PASCO CNTY SUBMITTAL
2	8-12-15	PASCO CNTY SUBMITTAL

THIS DRAWING NOT RELEASED FOR CONSTRUCTION UNLESS SO NOTED ABOVE

SHEET TITLE

LANDSCAPE PLAN

SHAWN BLISS
R.L.A. NO. 1548
DATE:

LP-9
SHEET

LANDSCAPE SCHEDULE

TREES

QTY.	SYMBOL	BOTANICAL NAME	COMMON NAME	SPECIFICATIONS	SPACING	TREES CALCULATIONS NATIVE	NON-NATIVE	DROUGHT TOL.
0	IA	ILEX X ATTENUPTA 'EAST PALATKA'	EAST PALATKA HOLLY	4" CAL., 10-12' HT. 4-6' SPD., FULL, NATIVE	SEE PLAN	0		YES
59	LIT	LAGERSTROEMIA INDICA 'TUSCARORA'	TUSCARORA CRAPE MYRTLE	4" CAL. STANDARD., 14-16' HT. 6' SPD.	SEE PLAN		59	YES
8	MGL	MAGNOLIA GRANDIFLORA 'LIL GEM'	LIL GEM MAGNOLIA	4" CAL., 12-14' HT., 6-8' SPD.	SEE PLAN		8	YES
39	QV	QUERCUS VIRGINIANA	LIVE OAK	4" CAL., 14-16' HT., 6-8' SPD., MIN. 4' CLEAR TRUNK, NATIVE	SEE PLAN	39		YES
12	TD	TAXODIUM DISTICHUM	BALD CYPRESS	3" CAL., 12-14' HT. 6-7' SPD., NATIVE	SEE PLAN	12		YES
7	PE1	PINUS ELLIOTTI	SLASH PINE	2" CAL., 10' HT. 4' SPD., NATIVE	SEE PLAN	7		YES
4	PE2	PINUS ELLIOTTI	SLASH PINE	3" CAL., 12' HT. 5' SPD., NATIVE	SEE PLAN	4		YES
7	PE3	PINUS ELLIOTTI	SLASH PINE	4" CAL., 14' HT. 6' SPD., NATIVE	SEE PLAN	7		YES
26	UP	ULMUS PARVIFOLIA	ALLEE ELM	4" CAL., 12-14' HT. 6-7' SPD., MIN. 8' CLEAR TRUNK	SEE PLAN	26		YES
162	TOTAL TREES				TOTAL TREES	95	67	
						NATIVE	NON-NATIVE	

NOTE: NO TREES WERE REMOVED (NO ADDITIONAL TREE MITIGATION INCHES REQUIRED)

SHRUBS & GROUNDCOVERS

						SHRUBS & GROUNDCOVERS CALCULATIONS		
360	TAS	TRACHELOSPERMUM ASIATICUM	ASIATIC JASMINE	1 GAL., 12"-15" SPD., MIN. 3 RUNNERS PER POT, FULL	18" O.C.		810 SF	YES
3071	LM	LIRIOPE MUSCARI 'EVERGREEN GIANT'	EVERGREEN GIANT LIRIOPE	1 GAL., 8-10 PIPS PER POT, FULL	18" O.C.		6,909 SF	YES
376	SPA	SPARTINA BAKERI	SAND CORDGRASS	3 GAL., 24" HT., & SPD., NATIVE	3' O.C.	3,384 SF		YES
3807	TOTAL				TOTAL SHRUBS / GROUNDCOVERS	3,384 SF	7,719 SF	
						NATIVE	NON-NATIVE	

NOTE: ALL SHRUBS & GROUNDCOVERS SHOWN IN PLANS SHALL BE INSTALLED AT THE TIME OF TREE INSTALLATION.

MULCH & GRASS

MULCH	MINI PINE BARK NUGGETS	PINE BARK	3" DEPTH IN ALL PLANTING BEDS	ALL PLANTING BEDS	N/A
SOD	STENOTAPHRUM SECONDATUM	ST. AUGUSTINE	2-3" THICK SOLID SOD, WEED FREE, FRESHLY CUT	SEE PLAN	NO
BAHIA	PENSACOLA BAHIA SOD	PENSACOLA BAHIA	2-3" THICK SOLID SOD, WEED FREE, FRESHLY CUT	SEE PLAN	YES

GENERAL LANDSCAPE NOTES:

1). EACH TREE RING SHALL BE MULCHED A MINIMUM OF 24" BEYOND TRUNK IN ALL DIRECTIONS.
2). ALL INVASIVE EXOTIC SPECIES MUST BE REMOVED FROM THE DEVELOPMENT AREA.
3). ALL PLANTINGS MUST BE FREE OF INSECTS, PESTS, DISEASE AND WEEDS.
4). CONTRACTOR TO VERIFY ALL QUANTITIES AS SHOWN ON LANDSCAPE PLAN SHEET LP1-LP-9.
5.) GALLON SIZES FOR PLANT MATERIAL ARE STATED AS THE MINIMUM. IF DIMENSIONS ARE NOT AVAILABLE WITHIN THE SPECIFIED CONTAINER IT IS THE CONTRACTOR'S RESPONSIBILITY TO PROVIDE THE DIMENSIONED PLANT MATERIAL IN ANOTHER SIZE POT.
6.) SEE CIVIL PLANS FOR POND STABILIZATION CRITERIA.
7.) ANY PLANT MATERIAL OF WHATSOEVER TYPE AND KIND REQUIRED BY PASCO COUNTY REGULATION SHALL BE REPLACED WITHIN THIRTY (30) DAYS OF THEIR DEMISE AND/OR REMOVAL.
8.) ALL LANDSCAPE AREAS SHALL BE PROVIDED WITH 100% IRRIGATION COVERAGE.
9.) LANDSCAPE IRRIGATION WILL BE PROVIDED BY REUSE.

PASCO COUNTY LANDSCAPE REGULATIONS

WATER MANAGEMENT REQUIREMENT:

BUFFER AT RETENTION POND

Required: min. 5' wide planting area to be maintained between retention pond and public R.O.W. or adjacent parcel, 1 tree per 50 linear feet

Provided: 350 LF / 50 = 7 trees
Provided: in compliance

NATIVE SHRUB AND GROUNDCOVER REQUIREMENT:

SHRUBS AND GROUNDCOVER	MIN. 30% NATIVE	REQ'D
11,103 SF	30	3,331 SF
TOTAL NATIVE SHRUB/GROUNDCOVER PROVIDED		3,384 SF
PERCENTAGE PROVIDED		31%

DROUGHT TOLERANT REQUIREMENT:

SHRUBS AND GROUNDCOVER	MIN. 50% DRT. TOL.	REQ'D
11,103 SF	50	5,552 SF
TOTAL DROUGHT TOLERANT SHRUB/GROUNDCOVER PROVIDED		11,103 SF
PERCENTAGE PROVIDED		100%

PASCO COUNTY STANDARD LANDSCAPE NOTES (LDC 905.2):

1. *Maintenance Responsibility.* The County is not responsible for maintenance of any landscaping unless approved through a County maintenance agreement. (LDC 905.2-C.1.a)

2. *Clear-Sight Triangle*. Where a driveway/accessway intersects a road right-of-way or where two (2) road rights-of-way intersect, vegetation, structures, and non-vegetative visual screens shall not be located so as to interfere with the clearsight triangle as defined in this Code or the *Florida Department of Transportation, Manual of Uniform Minimum Standards*, most recent edition (Green Book), whichever is more restrictive. *(LDC 905.2-C.1.b)*

3. *Sustainable Practices.* Landscaping shall be installed so that landscaping materials meet the concept of right material/right place. Installed trees and plants shall be grouped into zones according to water, soil, climate, and light requirements. Plant groupings based on water requirements are drought tolerant, natural, and oasis. *(LDC 905.2-C.1.c)*

4. *Diversity.* A maximum of 50 percent of the plant materials used, other than trees, may be non-drought tolerant. A minimum of 30 percent of the plant materials, other than trees and turfgrass, used to fulfill the requirements of this subsection shall be native Floridian species, suitable for growth in the county. *(LDC 905.2-C.1.d)*

5. *Diversity.* No one plant species of shrubs or ground cover plants, excluding turfgrass, shall constitute more than 25 percent coverage of the overall landscape area. *(LDC 905.2-C.1.d.5)*

6. *Quality.* All plant materials shall be Florida No. 1 grade per "Grades and Standards for Nursery Plants," Florida Department of Agriculture and Consumer Services (FDACS), which is incorporated herein by reference. *(LDC 905.2-C.2.a)*

7. *Avoid Easements.* Trees shall not be planted within any easement so as to interfere with the use of that easement, nor under any present or planned overhead utility, nor in any rights-of-way without County approval through the associated review process. (LDC 905.2-C.3.c)

8. Mulch shall be used in conjunction with living plant materials so as to cover exposed soil. Mulch shall be installed to a minimum depth of three (3) inches. The mulch should not be placed directly against the plant stem or tree trunk. Mulch shall not be required for annual beds. Stone or gravel may be used to cover a maximum of 20 percent of the landscaped area. *(LDC 905.2-C.3.d)*

9. *Quality Practices.* All landscaping shall be installed in accordance with standards and practices of the Florida Nursery, Growers, and Landscape Association and the Florida Chapter of the International Society of Arboriculture. *(LDC 905.2-C.3.e)*

10. All portions of a lot upon which development has commenced, but not continued for a period of 30 days, shall be planted with a grass species or ground cover to prevent erosion and encourage soil stabilization. Adequate coverage, so as to suppress fugitive dust, shall be achieved within 45 days. *(LDC 905.2-C.3.g)*

11. All required landscaping shall be maintained in a healthy condition in perpetuity in accordance with this Code. *(LDC 905.2-E.2)*

12. Ongoing maintenance to prevent the establishment of prohibited exotic species is required. *(LDC 905.2-E.4)*

PROSSER™
Community - Management - Energy - Relationships

13901 Sutton Park Drive South, Suite 200
Jacksonville, Florida 32224-0229

Office 904.739.3655
Fax 904.730.3413

www.prosserinc.com

Florida Certificate of Authorization
Number: 00004050

Hines

Asturia
PROMENADE

KEY PLAN

DATE : MAY 12, 2014
PROJECT NO. : 113055.01
DESIGNED BY : SB
DRAWN BY : BHK
SCALE : AS NOTED

No.	Date	Revision
1	5-26-15	PASCO CNTY SUBMITTAL
2	8-12-15	PASCO CNTY SUBMITTAL

THIS DRAWING NOT RELEASED FOR CONSTRUCTION UNLESS SO NOTED ABOVE

SHEET TITLE

LANDSCAPE SCHEDULE AND NOTES

SHAWN BLISS
R.L.A. NO. 1548
DATE:

LP-10
SHEET

P:\113\113055-01-BEHNKE RANCH-SITE PLANNING\CADD\CURRENT\PROMENADE\113055.01-Asturia-LANDSCAPE PROMENADE.dwg Aug 17, 2015 - 6:08pm

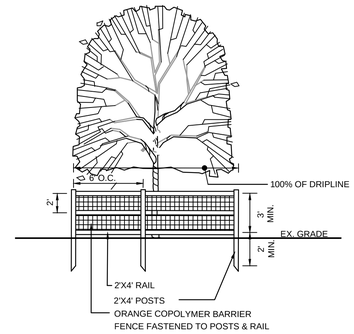

NOTES:
1) THIS BARRICADE SHALL BE IN PLACE PRIOR TO LAND CLEARING AND CONSTRUCTION ACTIVITIES.
2) THE PROTECTED TREES TO BE SAVED SHALL BE PROVIDED WITH A PROTECTED TREE BARRICADE FENCE THAT INCLUDES 100% OF DRIP LINE AND NO LESS THAN 50% OF THE AVERAGE RADIUS OF THE DRIPLINE ADJUSTED AS NEEDED. (SJCLDC 4.01.05G.)
3) WHERE EXISTING TREES TO REMAIN ARE BEHIND SILT FENCE, TREE PROTECTION BARRICADE NOT REQUIRED.
4) CONTRACTOR SHALL NOT WORK, STORE MATERIALS, OR DISTURB AREA BEHIND SILT FENCE & TREE PROTECTION BARRICADE.

TREE PROTECTION BARRICADE

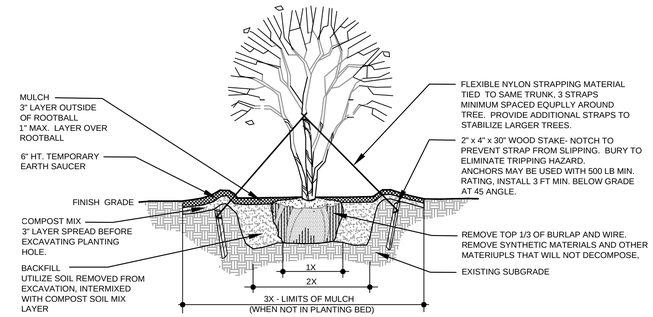

NOTES:
- PLANT TOP OF ROOT BALL 2" ABOVE FINISH GRADE.
- BOTTOM OF ROOT BALL SHALL BE SEATED DIRECTLY ON UNDISTURBED SUBGRADE.
- TOPMOST ROOT-ROOT FLARE SHALL BE MADE VISIBLE PRIOR TO PLANTING.
- ROOT DEFECTS - INSPECT ROOT BALL FOR ROOT DEFECTS, CUT ROOTS WHERE THEY BEGIN TO KINK OR CIRCLE. ROOT BALL SHALL COMPLY WITH FLORIDA GRADES AND STANDARDS.
- STAKE ABOVE FIRST STRONG BRANCHES TO PROVIDE FIRM SUPPORT.

MULTIPLE STEM TREE PLANTING

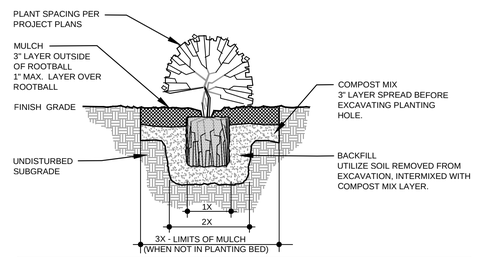

NOTES:
- PLANT TOP OF ROOT BALL 1" HIGHER THAN TOP OF COMPOST LAYER.
- 6" MIN. BACKFILL AROUND SIDES OF ROOT BALL, 3" ON BOTTOM. WATER AND TAMP TO REMOVE AIR POCKETS.
- TOPMOST ROOT-ROOT FLARE SHALL BE MADE VISIBLE PRIOR TO PLANTING.
- ROOT DEFECTS - INSPECT ROOT BALL FOR ROOT DEFECTS, CUT ROOTS WHERE THEY BEGIN TO KINK OR CIRCLE. ROOT BALL SHALL COMPLY WITH FLORIDA GRADES AND STANDARDS.

SHRUB PLANTING - NOT IN PLANTING BED

N.T.S.

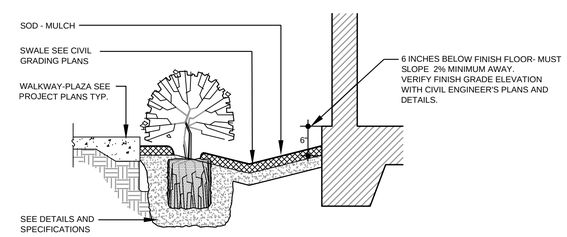

BED PREPARATION

N.T.S.

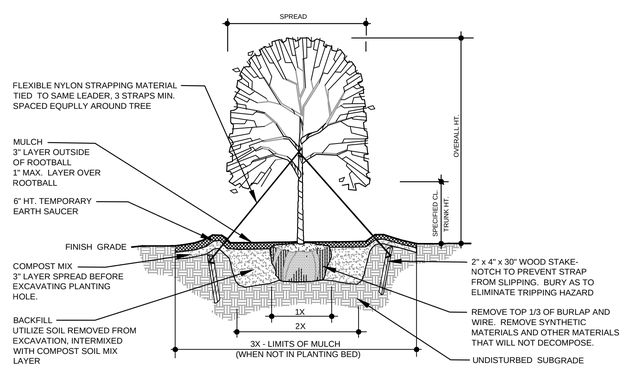

NOTES:
- PLANT TOP OF ROOT BALL 2" ABOVE FINISH GRADE.
- BOTTOM OF ROOT BALL SHALL BE SEATED DIRECTLY ON UNDISTURBED SUBGRADE.
- TOPMOST ROOT-ROOT FLARE SHALL BE MADE VISIBLE PRIOR TO PLANTING.
- ROOT DEFECTS - INSPECT ROOT BALL FOR ROOT DEFECTS, CUT ROOTS WHERE THEY BEGIN TO KINK OR CIRCLE. ROOT BALL SHALL COMPLY WITH FLORIDA GRADES AND STANDARDS.
- STAKE ABOVE FIRST STRONG BRANCHES TO PROVIDE FIRM SUPPORT.

TREE PLANTING - SINGLE TRUNK

N.T.S.

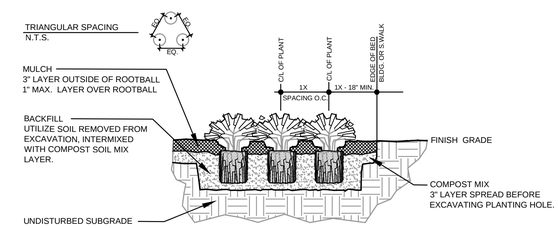

NOTES:
- GROUND COVER PLANTS SHALL BE SPACED AS INDICATED ON PROJECT PLANS.
- 6" MIN. BACKFILL AROUND SIDES OF ROOT BALL, 3" ON BOTTOM. WATER AND TAMP TO REMOVE AIR POCKETS.
- PLANT TOP OF ROOT BALL 1" HIGHER THAN TOP OF COMPOST LAYER.
- TOPMOST ROOT SHALL BE MADE VISIBLE PRIOR TO PLANTING.
- ROOT DEFECTS - INSPECT ROOT BALL FOR ROOT DEFECTS, CUT ROOTS WHERE THEY BEGIN TO KINK OR CIRCLE. ROOT BALL SHALL COMPLY WITH FLORIDA GRADES AND STANDARDS.

SHRUB AND GROUNDCOVER PLANTING BED

N.T.S.

PROSSER™
Community - Management - Energy - Relationships

13901 Sutton Park Drive South, Suite 200
Jacksonville, Florida 32224-0229

Office 904.739.3655
Fax 904.730.3413

www.prosserinc.com

Florida Certificate of Authorization
Number: 00004050

Hines

Asturia

PROMENADE

KEY PLAN

DATE : MAY 12, 2014

PROJECT NO. : 113055.01

DESIGNED BY : SB

DRAWN BY : BHK

SCALE : AS NOTED

No.	Date	Revision
1	5-28-15	PASCO CNTY SUBMITTAL
2	8-12-15	PASCO CNTY SUBMITTAL

THIS DRAWING NOT RELEASED FOR CONSTRUCTION UNLESS SO NOTED ABOVE

SHEET TITLE

LANDSCAPE DETAILS

SHAWN BLISS
R.L.A. NO. 1548
DATE:

LP-11

SHEET

P:\113\113055-01-BEHNKE RANCH-SITE PLANNING\CADD\CURRENT\PROMENADE\113055.01-Asturia-LANDSCAPE PROMENADE.dwg Aug 14, 2015 - 1:41pm

PART 1- GENERAL

1.1 GENERAL NOTES
A. Contractor shall comply with applicable laws, ordinances and codes; obtain required permits, inspections; pay required fees.
B. Prior to preparing and submitting cost proposal, Bidder shall visit and inspect the project site to become familiar with existing conditions.
C. This contract includes providing and installing plant and landscape materials as described within the contract documents.
D. Contractor shall perform fine grading to establish finish grades in landscape areas. Fine grading shall include only minor grading to correct random or infrequent grade irregularities to 1" or less.
E. Grading-Berming labeled on the project plans shall be the responsibility of the landscape contractor to construct. Landscape contractor shall provide fill and grading for these areas and coordinate fill requirements with general contractor prior to bidding.
F. Bidder-Contractor shall verify all plant quantities shown on plans. Notify Landscape Architect-Owner's Representative of discrepancies.
G. Plant size noted in plant schedule shall be the minimum acceptable size. Container gallon size are minimum. Contractor shall provide the plant material in container size needed to meet plant size specified.

1.2 DEFINITIONS
A. Finish Grade: Top of surface soil and top of planting bed after plant installation.
B. Topsoil: Native or imported surface soil modified with soil amendments per recommendations from commercial soil-testing laboratory.
C. Compost Mix: Homogeneously blended organic material, see Part 2 - Products.
D. Subgrade: Soil below finish grade and soil below finish grade remaining after completing excavation.
E. Final Acceptance: Shall mean that point in time when requirements of contract documents are completed, including punch-list items, to the satisfaction of the Landscape Architect-Owner's Representative. Contractor will be notified in writing of final acceptance by Landscape Architect-Owner's Representative.
F. Warranty Period: Shall begin after notification of final acceptance, continuing for the duration of the specified period.
G. Final Warranty Inspection; Shall occur near the end of the warranty period.
H. Contract Documents: Project plan set, technical specifications and documentation issued during project bidding, award and installation.

1.3 SUBMITTALS
B. Product Data: Each type of product utilized
C. Samples: Pine Bark
D. Product certificates, confirmation letter that the Contractor has procured all plant materials and products to complete the project plans.
E. Planting Schedule: Indicating anticipated installation dates.
F. Maintenance Instructions: Provide prior to final acceptance.
G. Agronomic Soil Tests for Topsoil and Compost Mix: Soil testing and recommendations shall be performed by a commercial soil-testing laboratory. Areas to be installed with plants and lawn areas shall be tested. Tests shall include a fertility test, pH factor, percentage of organic matter and a suitability analysis. The suitability analysis shall include percolation tests and evaluation of soil composition to determine the soil's suitability to sustain the project's plant materials and to bring the soil to a pH rating between 5.5 to 6.5. Submit copy to Landscape Architect-Owner's Representative of soil tests, written recommendations for soil suitability, soil amendments, fertilizer, chemical conditioner application rates for soil preparation, and a maintenance fertilization program.
H. Manufacturer's Data: Include physical characteristics, application, installation instructions and recommendations to be utilized.
a. Fertilizer
b. Each soil amendment to be used
c. Herbicide
d. Super absorbent, if to be utilized
e. Pre-emergent herbicide
f. Materials identified in contract documents
I. Written plant guarantee
J. Prior to purchase and delivery of plants, Contractor shall provide the Landscape Architect-Owner's Representative with photos of proposed plant materials and coordinate nursery visit.

1.4 QUALITY ASSURANCE
A. Landscape Contractor Qualifications: The Landscape Contractor (Contractor) shall have previous experience installing projects of equal or greater size to the project plans. The Contractor shall have a full-time supervisor with a minimum of 5 years of experience that is on-site during installation process.
B. Soil Analysis: Contractor shall provide soil analysis of the existing surface soil and compost mix. Agronomic soil testing shall be performed by a commercial soil-testing laboratory.
C. Provide quality, size, genus, species, and variety of plants indicated, complying with "Florida Number 1" or better classification in "Grades and Standards for Nursery Plants," latest edition, published by Florida Department of Agriculture, Division of Plant Industry, Gainesville, Florida. To evaluate plants not specifically listed in the "Grades and Standards for Nursery Plants," use the appropriate matrix type.
D. Pre-Installation Conference: Prior to beginning plant installations, conduct conference at project site.
E. Substitutions:
1. If a plant material or product is not available, the Contractor shall submit to the Landscape Architect-Owner's Representative for approval, proof of non-availability with a recommendation for an equivalent material. When authorized, adjustment of contract amount may be made. No substitutions will otherwise be allowed.
F. Inspection: Landscape Architect-Owner's Representative may inspect plants at nursery and project site prior to planting, for compliance with plans. The Landscape Architect-Owner's Representative may inspect plants at any time for size and condition of balls, root systems, insects, injuries, latent defects, and reject plant materials at any time during progress of work. Contractor shall remove rejected plants from project site. The Landscape Architect-Owner's Representative's preliminary inspection is not to be construed as acceptance until such time as a written final acceptance inspection is received.

1.5 DELIVERY, STORAGE, AND HANDLING
A. Prior to materials being shipped from supplier, Landscape Architect-Owner's Representative may inspect materials on-site or through the submission of photographs. Refer to the plant schedule within the project plan set for specific plants requiring on-site tagging-inspection.
B. Do not prune trees and shrubs before delivery. Protect bark, branches, and root systems from sun scald, drying, sweating, whipping, and other handling and tying damage. Do not bend or bind-tie trees or shrubs in such a manner as to destroy their natural shape. Provide protective covering of plants during delivery. Do not drop plant materials.
C. Deliver plants after preparations for planting have been completed and install immediately. If planting is delayed more than six hours after delivery, set plants trees in shade, protect from weather and mechanical damage, and keep roots moist.

1.6 WARRANTY
A. Warranty: Contractor shall warrant plants for the warranty period indicated against defects including death and unsatisfactory growth. Contractor will not be responsible for defects resulting from lack of adequate maintenance, abuse by Owner, winds of tropical storm speed per Saffir–Simpson Hurricane Scale or higher winds, or acts of God.
1. Warranty Period for Plant Materials: 1 year from date of final acceptance
2. Warranty Period for Sod: 6 months from date of final acceptance

LANDSCAPE SPECIFICATIONS

1.7 MAINTENANCE
A. Plant Materials: Maintain until final acceptance by pruning, cultivating, watering, weeding, fertilizing, restoring planting saucers, tightening and repairing stakes and supports, resetting plants to proper grades, vertical position, as required to establish healthy, viable plantings. Spray insecticides to keep plants free of insects and disease.
B. Protect plant materials from damage due to landscape operations, operations by other contractors and others. Maintain protection during installation and final acceptance. Treat, repair, and replace damaged plantings at no additional cost to the Owner.
C. Maintenance of sod areas: The Contractor shall maintain until final acceptance by protecting sod areas against traffic or other use by warning signs and barricades, as approved by the Landscape Architect-Owner's Representative. Damaged sod shall be repaired by re-grading, then re-sod. Contractor shall mow, water and otherwise maintain sod areas in a satisfactory condition until final acceptance of the work.
1. Maintain sod areas until final acceptance by watering, weeding, mowing, applications of herbicides, fungicides, insecticides, fertilization and re-seeding until a full, uniform stand of grass free of weeds, undesirable grass species, disease, and insects is achieved and accepted by the Landscape Architect-Owner's Representative.
a. Repair, re-work, and re-sod all areas that have washed out, eroded, or are not a healthy stand of grass.
b. Mow sod areas when top growth reaches a height where no more than a third of the leaf blade will be removed at any single mowing. Repeat mowing to maintain specified height per recommendations of local agricultural extension agency.

1.8 REPLACEMENTS AND CONDITIONS
A. Promptly remove and replace plant materials that are dead, unhealthy condition, fallen below acceptable quality. Prior to the end of the warranty period, a final warranty inspection of the work may be made by the Landscape Architect-Owner's Representative. The Contractor shall remove and replace plant materials and sod areas found to not be in compliance with contract requirements. Replacement plant material size and species shall be as noted in the project plans. A new warranty period shall commence on each plant replaced during the warranty period, contractor shall maintain plant warranty log.

1.9 FINAL INSPECTION AND ACCEPTANCE
A. Final Inspection: Upon completion of landscape installation, the Contractor shall notify the Landscape Architect-Owner's Representative in writing 10 days prior to requested inspection date. Landscape Architect-Owner's Representative will make an inspection to determine compliance with contract documents. When inspected landscape work does not comply with contract documents, the Contractor shall remove and replace rejected work and continue maintenance. Contractor shall provide 48 hour notice to Landscape Architect-Owner's Representative requesting re-inspection.
Plant Materials:
a. Replace plant materials not in healthy condition, fails below quality requirements
B. Lawns:
a. At the time of final warranty inspection, sod areas shall be healthy, well-rooted even colored, lawn is established, weed free without open joints and bare areas.

PART 2 - PRODUCTS

2.1 PLANTS
A. Tree and Shrub Material: Provide nursery-grown tree and shrub materials complying with plant quality requirements, Part 1-General. Provide well-shaped, fully branched, healthy, vigorous plants free of disease, insects, eggs, larvae, and defects such as knots, sun scald, injuries, abrasions, and disfigurement.
B. Ground Cover: Provide ground cover species indicated, established and well rooted in pots or similar containers, and complying with plant quality requirements, Part 1-General.
C. Annuals: Provide healthy, disease-free plants of species and variety shown or approved, complying with plant quality requirements, Part 1-General. Provide plants acclimated to the conditions they are to be installed on the project and are in bud with few, if any blooms.
D. Perennials: Provide healthy plants from a commercial nursery, of species and variety shown or approved, complying with plant quality requirements, Part 1-General.
E. Sod: Sod shall be species and locations in the project plans. Sod shall be freshly cut in pads (or rolls with prior approval). Sod shall be derived from an area having a soil type similar to the soil on which it is to be laid. Sod shall be healthy, free of weeds and insects including ground pearls and spittle bugs, in naturally green condition, and shall have an abundance of roots contained within a mat of topsoil derived in the harvesting process from the area where grown. Brown, dry, irregularly smooth, and/or un-fresh sod will be rejected.

2.2 PLANTING MATERIALS
A. Topsoil: pH range of 5.5 to 6.5, a minimum of 6 percent organic material content; free of stones 1 inch or larger in any dimension and extraneous materials harmful to plant growth.
1. Topoil Source: Amend existing surface soils according to recommendations from soil tests analyzed by commercial soil testing laboratory, see Part-1 General.
B. Soil Amendments: Following are soil amendments that may be utilized to modify existing surface soil according to recommendations from agronomic soil testing analysis.
a. Lime: Natural dolomitic limestone containing not less than 85 percent of total carbonates with a minimum of 30 percent magnesium carbonates, ground so that not less than 90 percent passes a 10-mesh sieve and not less than 50 percent passes a 100-mesh sieve.
b. Aluminum Sulfate: Commercial grade.
c. Peat Humus: Finely divided peat, completely decomposed and free of fibers to eliminate it's biological identity. Provide in granular form, free of hard lumps and with pH range suitable for intended use or Florida Muck with a texture and pH range suited for the intended use. Florida Muck shall be delivered in a non-muddy state, reasonably free of clay, roots and litter and other extraneous or toxic matter harmful to plant growth. Florida Muck shall be subject to approval by the Owner.
d. Bonemeal: Commercial, raw, finely ground; 4 percent nitrogen and 20 percent phosphoric acid.
e. Superphosphate: Soluble mixture of treated minerals; 20 percent available phosphoric acid.
f. Sand: Clean, washed builder's sand, free of toxic materials, free of salt, weeds, sticks and other debris. Sand shall conform to ASTM C3 for five aggregates.
g. Perlite: Conforming to National Bureau of Standards PS 23.
h. Vermiculite: Horticultural grade, free of toxic substances.
i. Sawdust: Rotted sawdust, free of chips, stones, sticks, soil, or toxic substances and with 7.5 pounds of nitrogen uniformly mixed into each cubic yard of sawdust.
j. Manure: Well rotted, unleached stable or cattle manure containing not more than 25 percent by volume of straw, sawdust, or other bedding materials and containing no chemicals or ingredients harmful to plants.
k. Mulch: Organic mulch shall be uniform in size, shape, texture and free from deleterious materials and suitable for top dressing of trees, shrubs, or plants and consisting of one of the following (see plan for location of mulch type):
1. Medium-sized (Mini-sized) pine bark chips, clean, bright and free from weeds, moss, sticks and other debris.
2. Areas indicated as "pine straw mulch" shall include mulch that is clean, bright and free from weeds, moss, sticks and other debris.

l. Fertilizer:
1. Fertilizer: Pelletized fertilizer with nitrogen, phosphorous and potassium in 100 percent slow release form, with the following composition:
a. Composition: 8 percent nitrogen, 2 percent phosphorous, 12 percent potassium + 4 percent magnesium and all micro-nutrients

LANDSCAPE SPECIFICATIONS

2.3 COMPOST MIX
A. Compost Mix: Manufactured mix that is weed and disease free, pasteurized composed of:
a. 34% Aged Pine Bark
b. 33% Finished Organic Compost
c. 33% Composted Cow Manure

B. Compost mix shall be sent to an approved agronomic soil-testing laboratory to provide the requirements noted Part 1-General.

D. Seed:
1. Seed: All seed shall be furnished from a certified seed dealer or certified seed grower; meet the requirements of the Florida Department of Agriculture regulations; be labeled in accordance therewith. Seed shall be free of noxious weeds.

E. Sprigging: Sprigs shall be certified to genetic purity, free of pests and disease, delivered in a timely fashion and consist of stems, leaves and stolons. The sprigs shall come from a certified supplier, approved by the Owner's Representative. After being harvested, the sprigs shall be delivered to the planting site within 24 hours. The stock shall contain no weeds, soil, or other debris and shall not be dried out at the time of planting.
Sprigs shall be harvested to facilitate separation and distribution. Sprigs shall average four to six inches in length and carry at least four nodes. Sprigs shall be planted within twenty- four hours after removal from the certified supplier. It shall be the Contractor's responsibility to protect the stolons, keeping them moist and out of the sunlight before and during the planting operation .

PART 3 - E□ECUTION

3.1 PLANTING
1. Prior to installing plant materials, Contractor shall perform drainage test excavations one per acre of site planting areas or submit plan of locations for Landscape Architect approval, a minimum of 250 ft on center throughout the planting and sod areas. Test excavations shall be a minimum of 12"dia. and 12" deeper than the largest proposed plant rootball. Test excavations shall be filled with water to finish grade, then monitored to verify excavations have completely drained within a 3 hour period. Landscape Contractor shall notify the Landscape Architect-Owner's Representative of any excavations which fail this test, prior to proceeding with plant installations. Corrective actions may be required, such as but not limited to over-excavation to break sub-surface soil conditions which shall be the Contractor's responsibility and may be considered additional work. Contractor shall seek and obtain approval from Owner's Representative prior to proceeding.
2. Unsuitable Soil Conditions: Absolutely no plastic or clayey soil is to be used in landscape areas. If such a condition is found, the area is to be back-filled with material of suitable sandy gradation which is porous and percolates well with reasonable compaction. If any planting or sod area has a plastic or clayey soil condition which prevents proper drainage, then a system of underdraining, turf drain or other means of releasing underground standing water must be incorporated under the direction of the Landscape Architect-Owner's representative.
3. Upon completion of landscape installation the finish grade of planting beds and lawn areas shall be minimum 6 inches below adjacent structures and slope away from existing structures per the Florida Building Code. Verify compliance with Florida Building Code with General Contractor prior to beginning work. Parking lot islands shall slope at 3% from center of island to curb. Finish grade shall be below sidewalks, curbs and walking surfaces to allow for mulch thickness and sod.
4. Upon completion of landscape installation, the Contractor shall notify the Landscape Architect-Owner's Representative in writing 10 days prior to requested inspection date. Landscape Architect-Owner's Representative will make an inspection to determine compliance with Contract Documents.
□. The Contractor shall be responsible for stability and plumb conditions of all plant materials, be legally liable for damage caused by instability of plant materials. Proper staking and guying is the Contractor's responsibility. Contractor shall under their own discretion provide additional staking and guying above and beyond the requirements of the project plans at no additional expense to the Owner.

A. Plant Material Installation and Planting Bed Preparation:
1. Topsoil shall be modified according to recommendations from agronomic soil-testing laboratory, prior to installation of plants.
2. Spead on top of topsoil a 3 inch layer of compost mix prior to planting. Mix shall be incorporated in planting holes during installation.
3. Do not spread compost mix if topsoil is frozen, muddy, or excessively wet.
4. Planting Pits and Trenches: Excavate circular planting pits with sides sloped inward. Trim base leaving center area raised slightly to support root ball and assist in drainage. Do not further disturb base. Scarify sides of plant pit smeared or smoothed during excavation.
5. Topmost Root: Topmost root-root flare shall be visible prior to planting - Find the topmost root and remove excess soil to expose topmost root-root flare.
6. Root Defects: Inspect root ball for root defects, cut roots at the point where they begin to kink or circle. Root ball shall comply with Florida Grades & Standards.
7. Remove rocks, sticks or other deleterious material greater than 1 inch in any 1 direction prior to backfill process.
8. Set tree, palm and shrubs plumb and in center of tree planting pit or trench with top of root ball 2 inches above finish grade.
a. Container Grown: Carefully remove root ball from container without damaging root ball or plant.
b. Ball and Burlaped Root ball: Do not use plant materials if root ball is cracked or broken before or during planting operation. Do not lift plants by the trunk. Remove rope, synthetic burlap, plastic and materials that will not decompose. Remove top 1/3 of wire basket.
c. Backfill planting excavation incorporating compost mix. Work soil around roots eliminate voids and air pockets. When planting pit is approximately one-half backfilled, water thoroughly before placing remainder of backfill.
d. Repeat watering until no more water is absorbed. After planting, remove excess soil and rake plant beds to a smooth even surface conforming to required finish grades.
e. Upon completion of plant installations, fertilize according to specifications.
f. Tree pits in non-irrigated areas shall be installed with super absorbent, according to manufacturer's recommendations.
9. Water thoroughly after planting, taking care not to cover plant crowns with wet soil.
10. Protect plants from hot sun and wind; remove protection if plants show evidence of recovery from transplanting shock.
11. Finish Grading: Level planting area to a smooth, uniform surface with loose, uniformly fine texture. Roll and rake, remove ridges, and fill depressions to meet finish grades.
12. Upon completion of plant installations, fertilize according to specifications.
13. Tree and Shrub Pruning: Prune, trees and shrubs according to International Society of Arboriculture standards. Contractor shall prune trees and shrubs to comply with Florida Grades and Standards. Prune plants to retain natural character.

B. Sod:
1. Topsoil shall be modified according to recommendations from agronomic soil-testing laboratory, prior to installation of sod, see Part 1-General.
2. Remove rocks, sticks or other deleterious material greater than 1 inch in any 1 direction prior to sod installation.
3. Finish grade to receive sod shall be uniformly graded and irrigated prior to sod installation. Sod shall be laid end-to-end and side-to-side to form a uniform layer of un-broken, un-gapped turf. All uneven edges shall be squarely trimmed to allow close and firm fitting of each piece. All gaps or spaces shall be filled to a smooth level with topsoil as specified herein. Edges shall be "heeled-in" and finished smoothly without uneven exposure. Place sod with staggered joints closely butted, tamped or rolled to an even surface to the required finished grade. Avoid continuous seam along line of water flow in swales. Place sod in rows at right angles to slope. Peg sod on slopes greater than 3:1.
4. Upon completion of sod installation, sod areas shall be watered to provide a healthy growing condition. Watering shall be monitored and adjusted by the Contractor to prevent over or under watering.

LANDSCAPE SPECIFICATIONS

C. Seed:
1. Seed: All seed shall be furnished from an established seed dealer or certified seed grower; shall meet the requirements of the Florida Department of Agriculture regulations; and shall be labeled in accordance therewith. Seed shall be free of noxious weeds.

2. Seed Planting: At a minimum the contractor shall test the soil to verify conditions are acceptable for turf growth.

2.1. Submit agronomic soil tests for existing soil. Tests shall be performed by an approved agronomic soils testing laboratory and shall include a fertility test with the pH factor and the percentage of organic matter and a suitability analysis. The suitability analysis will include percolation tests and evaluation of soil composition to determine the soil's suitability to sustain healthy turf. Submit written recommendations for soil suitability and all necessary soil amendments, fertilizer and chemical conditioner application rates for soil preparation, and a post maintenance fertilization program. Submit recommendations to bring the soil to a pH rating between 5.5 to 6.5 and to supply necessary nutrients to satisfactory level for planting and sustaining vigorous turf growth. Submit a copy of soil tests with suitability analysis and recommendations to Owner's Representative prior to any planting.
2.2 At a minimum apply 100 lbs/acre of scarified, chemically treated Bahia Seed. Apply by hand, cyclone seeder, drill or hydro-seeding. The final result shall place the seeds ¼" - ½" below the soil.
2.3. At a minimum apply an additional 30 lbs/acre of quick growing rye grass over the entire area.
2.4. Contractor is responsible for utilizing the best application method to prevent erosion of soil during seed growth.
2.5. At a minimum apply mulch (straw, hay, wood, etc.) at a rate of 2.5 tons per acre during seeding.
2.6. At a minimum apply fertilizer during seeding at a rate of 250lbs/acre using a 12-6-8 fertilizer or other ratio recommending by the soil testing. An additive of 4% magnesium is also required and should be verified with soil testing.
2.7. Contractor is responsible for dust control and measure should be taken to minimize movement of dust in addition to seeding and mulching.

3. Watering: At a minimum apply 3/4" to 1" of water each week to the newly seeded areas to help germination until the grass is fully established. The contractor is responsible to monitor rainfall quantities and supplement with watering as necessary. The contractor shall record all watering information and furnish to the Owner's Representative when requested.
3.1. During the maintenance period the contractor shall supplement the rain water amount with hand watering as necessary to maintain an average of ½" of water weekly. At any time the owner's representative may require an immediate watering of areas they find suffering from a lack of water. The contractor will have 2 days to water these areas.

4. Maintenance: At a minimum the contractor shall be responsible for mowing the new established Bahia grass at four (4) different times throughout the 12 month warranty period. The timing of mowing shall be coordinated and approved by the owner's representative.
4.1. At a minimum the contractor shall implement a fertilization program that will adequately assist the continued health of the turfgrass. This should include a spring, summer, and fall fertilization treatment unless proper soil sample analysis is supplied to the owner's representative that warrants no treatment required. The owner's representative shall make the final decision.
4.2. At the request of the owner's representative, at any given time, any area of the project that has not properly been covered by turfgrass, that is undernourished, underwatered, eroded, or in any other way not acceptable to the owner's representative, the contractor will have seven (7) days to fully correct the problem at the contractor's expense.

D. Fertilization, Pre-Emergent and Mulching:
1. Prior to mulching, apply fertilizer specified in Part 2-Products to tree, palm, shrub, groundcover and sod areas at the rate of 1.5 pounds of actual fertilizer per 100 square feet. Fertilizer application shall be witnessed by Landscape Architect-Owner's Representative.

E. Mulching and Pre-Emergent Herbicide:
1. Apply pre-emergent herbicide to tree, palm, shrub, and groundcover areas according to manufacture's recommendations. Pre-emergent application shall be witnessed by Landscape Architect-Owner's Representative.
2. Mulch surfaces of tree, palm, shrub and groundcover areas. Apply 3 inch depth of settled mulch, level with adjacent finish grades, sidewalks, curbs and sod. Mulch over root ball of plants shall be 1 inch maximum.

F. Plant Protection:
1. Protect plants from damage due to landscape operations, operations by other contractors and trades, and others. Maintain protection during installation and maintenance periods, as approved by Landscape Architect-Owner's Representative. Treat, repair, or replace damaged plant materials.

G. Clean Up:
1. Remove surplus soil and waste material, including excess subsoil, unsuitable soil, trash, and debris, and legally dispose off Owner's property.

H. Sprigging:
1. The Contractor shall carefully coordinate the sprigging operation being careful not to sprig an area too large or move so swiftly that a reasonable watering operation could not follow. Carelessness on the part of the Contractor, as mentioned above, shall result in the Contractor being liable for the cost of additional sprigs and the replanting of same.
2. A successful planting shall be defined as the insertion of 12 live sprigs per square foot.
3. An automatic planting machine shall be used, the machine shall insert live sprigs at 1-1/2 to 2 inch centers and roll the surface smooth on one pass. A minimum rate for sports field shall be 400 bushels per acre and sprigs shall be "cut in" mechanically.
4. After planting, sprigs must be watered to avoid drying out. Watering must be maintained until the sprigs tack down, about 14 days, then reduced to kept the sprigs well irrigated until complete coverage is obtained. Insects such as army worms are the biggest insect threat and can completely destroy a stand of immature sprigs overnight, it is the Contractors responsibility to monitor and treat all infestations as may be required.
5. The sprigs must be properly fertilized until completely grown in (about 12 weeks in optimum season - do not attempt to sprig past August 1). Apply 1 lb of nitrogen/1,000 square feet per week, applied in 2, 1/2 lb applications for 12 weeks. The nitrogen source shall be 75% water soluble and 25% water insoluble. Test soil and apply lime as needed to meet , then apply a pre-plant "complete" fertilizer, 10-10-10 at least 2lb/M which needs to be lightly incorporated into the soil prior to sprigging.
6. Contractor shall be responsible for the planting and grow-in of all sprigged areas. The grow-in responsibilities shall include all mowing, fertilization monitoring, watering and any additional activities required to produce a weed-free dense turf. The grow-in and maintenance period shall be considered complete when a healthy, well-rooted, even-colored, viable lawn has been established, free of weeds, surface irregularities and no bare areas greater than 2-1/2 square inch/10 square feet, with no bare area greater than 1 sq in each. Contractor shall notify the Landscape Architect-Owner's Representative in writing requesting an inspection with 48 hours notice to determine final acceptance of all the sprigged areas.

PROSSER™
Community - Management - Energy - Relationships
13901 Sutton Park Drive South, Suite 200
Jacksonville, Florida 32224-0229
Office 904.739.3655
Fax 904.730.3413
www.prosserinc.com
Florida Certificate of Authorization
Number: 00004050

Hines

Asturia
PROMENADE

KEY PLAN

DATE : MAY 12, 2014
PROJECT NO. : 113055.01
DESIGNED BY : SB
DRAWN BY : BHK
SCALE : AS NOTED

No.	Date	Revision
1	5-26-15	PASCO CNTY SUBMITTAL
2	8-12-15	PASCO CNTY SUBMITTAL

THIS DRAWING NOT RELEASED FOR CONSTRUCTION UNLESS SO NOTED ABOVE

SHEET TITLE

LANDSCAPE SPECIFICATIONS

SHAWN BLISS
R.L.A. NO. 1548
DATE:

LP-12
SHEET

P:\113\113055-01-BEHNKE RANCH-SITE PLANNING\CADD\CURRENT\PROMENADE\113055.01-Asturia-LANDSCAPE PROMENADE.dwg Aug 14, 2015 - 1:41pm

	25yr-24hr	25yr-24hr	100yr-24hr	100yr-24hr	100yr-5day	100yr-5day
Basin #	1988 Datum	1929 datum	1988 Datum	1929 datum	1988 Datum	1929 datum
BNDYE2	45.32	46.15	44.84	45.67	46.33	47.16
BNDYE4	51.12	51.95	51.46	52.29	51.98	52.81
NE2950	50.41	51.24	50.88	51.71	51.96	52.79
NE2970	51.11	51.94	51.45	52.28	51.98	52.81
NE2980	50.56	51.39	51.10	51.93	51.97	52.80
NE3050	49.72	50.55	50.10	50.93	50.76	51.59
NE3300	46.82	47.65	46.99	47.82	47.37	48.20
NE3320	46.88	47.71	47.06	47.89	47.40	48.23
NE3330	46.85	47.68	47.02	47.85	47.38	48.21
NE3340	46.83	47.66	46.99	47.82	47.37	48.20
NE3350	46.78	47.61	46.94	47.77	47.33	48.16
NE3360	46.82	47.65	46.98	47.81	47.36	48.19
NE3370	46.87	47.70	47.03	47.86	47.39	48.22
NE3380	48.75	49.58	48.77	49.60	48.80	49.63
NE3390	46.84	47.67	47.01	47.84	47.38	48.21
NE3400	46.83	47.66	46.99	47.82	47.37	48.20
NE3410	53.27	54.10	54.43	55.26	51.97	52.80
NE3420	50.54	51.37	50.63	51.46	50.38	51.21
NE3428	46.42	47.25	46.69	47.52	47.15	47.98
NE3470	50.11	50.94	50.16	50.99	50.09	50.92
NE3480	46.50	47.33	46.76	47.59	47.22	48.05
NE3490	46.48	47.31	46.75	47.58	47.20	48.03
NE3500	46.48	47.31	46.73	47.56	47.17	48.00
NE3502	47.10	47.93	47.12	47.95	47.36	48.19
NE3504	47.01	47.84	47.04	47.87	47.32	48.15
NE3510	46.78	47.61	46.93	47.76	47.31	48.14
NE3520	48.65	49.48	48.74	49.57	48.51	49.34
NE3560	47.65	48.48	47.82	48.65	47.89	48.72
NE3570	46.85	47.68	47.02	47.85	47.39	48.22
NE3580	46.78	47.61	46.93	47.76	47.32	48.15
NE3590	46.78	47.61	46.93	47.76	47.32	48.15
NE3600	46.58	47.41	46.82	47.65	47.26	48.09
NE3610	46.45	47.28	46.76	47.59	47.23	48.06
NE3620	46.19	47.02	46.61	47.44	47.12	47.95
NE3630	46.13	46.96	46.54	47.37	47.04	47.87
NE3635	46.14	46.97	46.56	47.39	47.06	47.89
NE3640	46.10	46.93	46.51	47.34	46.98	47.81
NE3660	46.18	47.01	46.64	47.47	47.18	48.01
NE3670	46.14	46.97	46.60	47.43	47.14	47.97
NE3680	46.14	46.97	46.60	47.43	47.13	47.96
NE3700	46.14	46.97	46.58	47.41	47.11	47.94
NE3710	46.13	46.96	46.56	47.39	47.07	47.90
NE3720	48.18	49.01	48.22	49.05	48.15	48.98
NE3730	46.60	47.43	46.76	47.59	47.04	47.87
NE3740	46.17	47.00	46.56	47.39	47.04	47.87
NE3750	46.13	46.96	46.54	47.37	47.03	47.86
NE3760	47.15	47.98	47.18	48.01	47.30	48.13
NE3775	46.64	47.47	46.80	47.63	47.37	48.20
NE3780	46.49	47.32	46.79	47.62	47.29	48.12
NE3790	46.49	47.32	46.78	47.61	47.25	48.08
NE3800	46.49	47.32	46.79	47.62	47.27	48.10
BLK-LKP	49.50	50.33	49.96	50.79	49.51	50.34
H	47.53	48.36	47.69	48.52	47.60	48.43
I	47.51	48.34	47.67	48.50	47.58	48.41
J	47.52	48.35	47.67	48.50	47.59	48.42
3500-A	50.36	51.19	50.71	51.54	50.11	50.94
3730-A	48.60	49.43	49.08	49.91	48.32	49.15
3740-A	49.14	49.97	49.61	50.44	48.80	49.63
3740-B	47.79	48.62	48.07	48.90	47.60	48.43
H-B	50.27	51.10	50.65	51.48	50.33	51.16

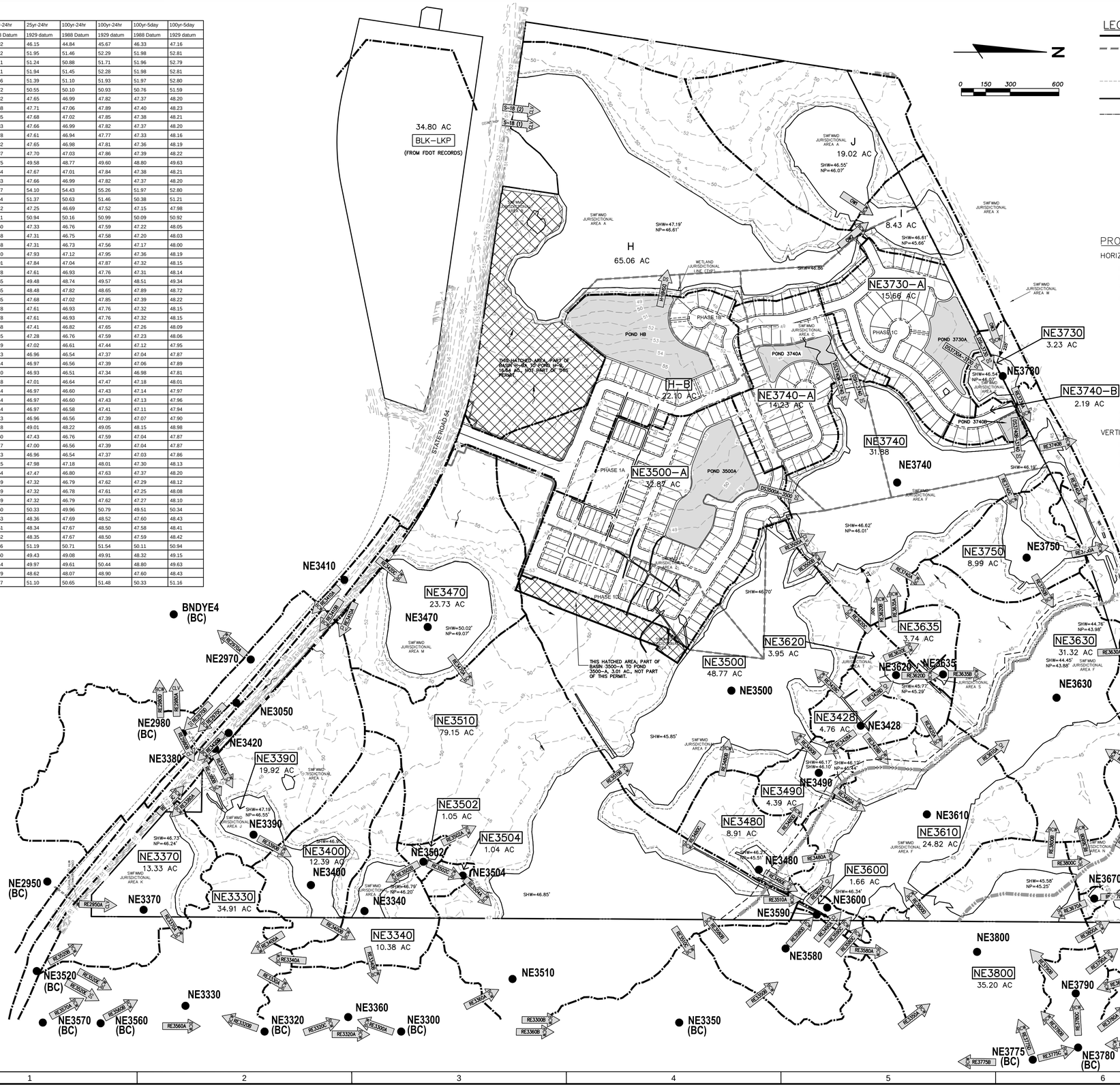

LEGEND

- PRE-DEVELOPMENT BASIN BOUNDARY
- PHASE LINE
- (BC) BOUNDARY CONDITION
- EXISTING CONTOUR (BASED ON NAVD 1988 DATUM)
- PROPERTY LINE
- JURISDICTIONAL LIMIT
- REACH ID — REACH ID AND DIRECTION OF FLOW (BCW=BROAD CRESTED WEIR, CLV=CULVERT, CH=CHANNEL, DS=DROP STRUCTURE)
- 7 — BASIN ID
- NE3730 — NODE ID
- OVERLAND FLOW

NOTE: ALL CULVERTS SHOWN AT APPROXIMATE LOCATIONS ONLY.

PROJECT DATUM

HORIZONTAL:

BEARINGS AND COORDINATES (IN U.S. SURVEY FEET) ARE BASED ON NATIONAL GEODETIC SURVEY (NGS), STATE PLANE COORDINATES, FLORIDA WEST ZONE, NORTH AMERICAN DATUM 1983/1990 ADJUSTMENT.

CONTROL STATIONS UTILIZED:

(1) FOUND 3/4" IRON ROD AND CAP STAMPED "RICHEYPORT 1989", DESIGNATED BY NGS AS "RICHEYPORT", PID = AL7874 (NORTHING = 1401954.99, EASTING = 455717.41)

(2) FOUND 3/4" IRON ROD WITH PUNCH HOLE, INSIDE METAL CASING, LID STAMPED "Z09-019 1991", DESIGNATED BY NGS AS "Z09 019", PID = AL81506 (NORTHING = 1396427.02, EASTING = 445426.97)

(3) FOUND 3/4" IRON ROD WITH PUNCH HOLE, INSIDE METAL CASING, LID STAMPED "T10-023 1991", DESIGNATED BY NGS AS "T10 023", PID = AL8097 (NORTHING = 1424909.29, EASTING = 447024.01)

ALL AS PUBLISHED BY THE NATIONAL GEODETIC SURVEY WEB SITE. (http://www.ngs.noaa.gov)

VERTICAL:

ELEVATIONS ARE BASED ON NORTH AMERICAN VERTICAL DATUM, 1988 (NAVD 88).

CONTROL BENCHMARK UTILIZED:

(1) A FOUND 3/4" IRON ROD WITH PUNCH HOLE, INSIDE A METAL CASING, LID STAMPED "X-668 2006", DESIGNATED BY NGS AS "X 668", PID = DJ8242, ELEVATION = 51.12 FEET, ADJUSTED; AS PUBLISHED BY THE NATIONAL GEODETIC SURVEY WEB SITE.(http://www.ngs.noaa.gov)

CONVERSION FACTOR:

ADD 0.83 FEET TO ELEVATIONS TO CONVERT TO THE NATIONAL GEODETIC SURVEY, NATIONAL GEODETIC VERTICAL DATUM, 1929 ADJUSTMENT (NGVD 29). CONVERSION CALCULATED UTILIZING VERTCON (VERSION 2.0).

NOTE:

INFORMATION SHOWN HEREON WAS TAKEN FROM THE POST-DEVELOPED BASIN MAP FOR ASTURIA PHASE 1 AS PERMITTED UNDER ERP# 43029941.066

JOB NO.	506-100C
DWN	213
DATE	5-1-2015
DESIGNED	AVS
DRAWN	AVS
CHECKED	PES
CHKD BY	
REVISIONS	
NO.	DATE

DESIGNED FOR
ASTURIA COMMUNITY DEVELOPMENT DISTRICT
605 PALENCIA CLUB DRIVE, ST. AUGUSTINE, FLORIDA 32095
PHONE: (904) 810-0500 - FAX: (904) 810-0525

PROJECT NAME: Asturia — PROMENADE PARKWAY

SHEET NAME: PRE-DEVELOPMENT BASIN MAP

FLORIDA DESIGN CONSULTANTS, INC.
THINK IT. ACHIEVE IT.
203 N. ST. MARYS BLVD., NO. SUITE 6/8 RD., GULFPORT, FLORIDA 34655
PHONE: (800) 532-1047 FAX: (727) 948-3848 WWW.FLDESIGN.COM C.A. NO. 7421

SHEET 1 OF 2

©Copyright 2015 Florida Design Consultants, Inc. Drawings and concepts may not be used or reproduced without written permission.

K:\213\Projects\DRNDATA\Plans\Promenade Parkway\213_PROMENADE-EPRE-DEV.dwg — May 27, 2015 @ 12:54pm — asyrlako

	25yr-24hr	25yr-24hr	100yr-24hr	100yr-24hr	100yr-5day	100yr-5day
Basin #	1988 Datum	1929 datum	1988 Datum	1929 datum	1988 Datum	1929 datum
BNDYE2	45.32	46.15	45.75	46.58	46.33	47.16
BNDYE4	51.12	51.95	51.51	52.34	51.98	52.81
NE2950	50.41	51.24	51.42	52.25	51.96	52.79
NE2970	51.11	51.94	51.50	52.33	51.98	52.81
NE2980	50.56	51.39	51.47	52.30	51.97	52.80
NE3050	49.72	50.55	50.34	51.17	50.76	51.59
NE3300	46.82	47.65	46.99	47.82	47.37	48.20
NE3320	46.88	47.71	47.06	47.89	47.40	48.23
NE3330	46.85	47.68	47.02	47.85	47.38	48.21
NE3340	46.83	47.66	46.99	47.82	47.37	48.20
NE3350	46.78	47.61	46.94	47.77	47.33	48.16
NE3360	46.82	47.65	46.98	47.81	47.36	48.19
NE3370	46.87	47.70	47.03	47.86	47.39	48.22
NE3380	48.75	49.58	48.79	49.62	48.80	49.63
NE3390	46.84	47.67	47.01	47.84	47.38	48.21
NE3400	46.83	47.66	46.99	47.82	47.37	48.20
NE3410	53.27	54.10	54.43	55.26	51.97	52.80
NE3420	50.54	51.37	50.63	51.46	50.38	51.21
NE3428	46.42	47.25	46.69	47.52	47.15	47.98
NE3470	50.20	51.03	50.32	51.15	50.19	51.02
NE3480	46.50	47.33	46.76	47.59	47.22	48.05
NE3490	46.48	47.31	46.75	47.58	47.20	48.03
NE3500	46.48	47.31	46.73	47.56	47.17	48.00
NE3502	47.10	47.93	47.12	47.95	47.36	48.19
NE3504	47.01	47.84	47.04	47.87	47.32	48.15
NE3510	46.78	47.61	46.93	47.76	47.31	48.14
NE3520	48.65	49.48	48.74	49.57	48.51	49.34
NE3560	47.65	48.48	47.82	48.65	47.89	48.72
NE3570	46.85	47.68	47.02	47.85	47.39	48.22
NE3580	46.78	47.61	46.93	47.76	47.32	48.15
NE3590	46.78	47.61	46.93	47.76	47.32	48.15
NE3600	46.58	47.41	46.82	47.65	47.26	48.09
NE3610	46.45	47.28	46.76	47.59	47.23	48.06
NE3620	46.19	47.02	46.61	47.44	47.12	47.95
NE3630	46.13	46.96	46.54	47.37	47.04	47.87
NE3635	46.14	46.97	46.56	47.39	47.06	47.89
NE3640	46.10	46.93	46.51	47.34	46.98	47.81
NE3660	46.14	47.01	46.64	47.47	47.18	48.01
NE3670	46.14	46.97	46.60	47.43	47.14	47.97
NE3680	46.14	46.97	46.60	47.43	47.13	47.96
NE3700	46.14	46.97	46.58	47.41	47.11	47.94
NE3710	46.13	46.96	46.56	47.39	47.07	47.90
NE3720	N/A	N/A	N/A	N/A	N/A	N/A
NE3730	46.60	47.43	46.76	47.59	47.04	47.87
NE3740	46.17	47.00	46.56	47.39	47.04	47.87
NE3750	46.13	46.96	46.54	47.37	47.03	47.86
NE3760	47.15	47.98	47.18	48.01	47.30	48.13
NE3775	46.64	47.47	46.80	47.63	47.37	48.20
NE3780	46.49	47.32	46.79	47.62	47.29	48.12
NE3790	46.49	47.32	46.78	47.61	47.25	48.08
NE3800	46.49	47.32	46.79	47.62	47.27	48.10
BLK-LKP	49.50	50.33	49.96	50.79	49.51	50.34
H	47.53	48.36	47.69	48.52	47.60	48.43
I	47.51	48.34	47.67	48.50	47.58	48.41
J	47.52	48.35	47.67	48.50	47.59	48.42
3500-A	50.36	51.19	50.71	51.54	50.11	50.94
3730-A	48.60	49.43	49.08	49.91	48.32	49.15
3740-A	49.14	49.97	49.61	50.44	48.80	49.63
3740-B	47.79	48.62	48.07	48.90	47.60	48.43
H-B	50.27	51.10	50.65	51.48	50.33	51.16
NE3400B-1	50.79	51.62	52.79	53.62	49.37	50.20
Pond 3400B	49.11	49.94	49.64	50.47	48.94	49.77

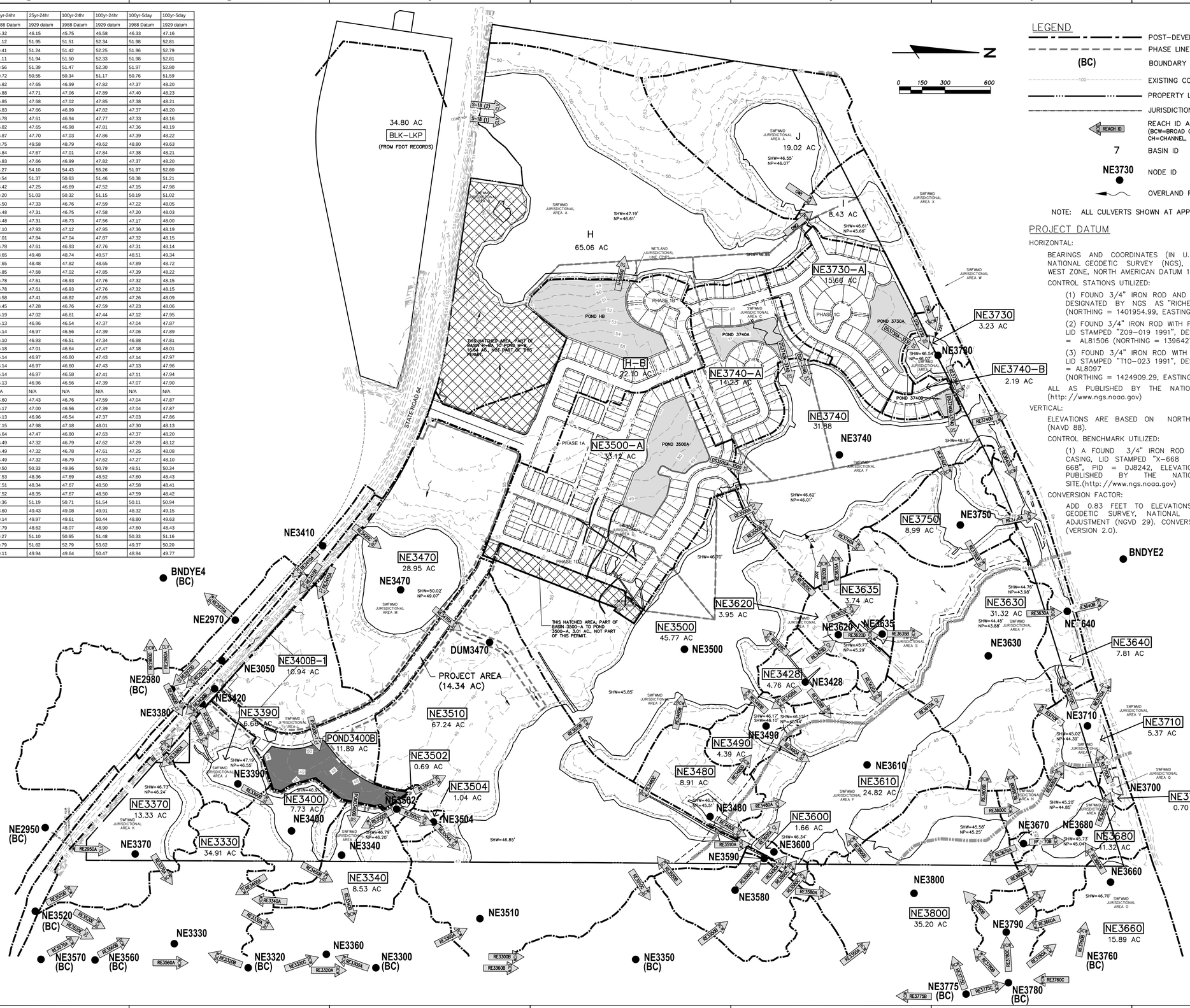

LEGEND

- POST-DEVELOPMENT BASIN BOUNDARY
- PHASE LINE
- (BC) BOUNDARY CONDITION
- EXISTING CONTOUR (BASED ON NAVD 1988 DATUM)
- PROPERTY LINE
- JURISDICTIONAL LIMIT
- REACH ID — REACH ID AND DIRECTION OF FLOW (BCW=BROAD CRESTED WEIR, CLV=CULVERT, CH=CHANNEL, DS=DROP STRUCTURE)
- 7 — BASIN ID
- NE3730 — NODE ID
- OVERLAND FLOW

NOTE: ALL CULVERTS SHOWN AT APPROXIMATE LOCATIONS ONLY.

PROJECT DATUM

HORIZONTAL:

BEARINGS AND COORDINATES (IN U.S. SURVEY FEET) ARE BASED ON NATIONAL GEODETIC SURVEY (NGS), STATE PLANE COORDINATES, FLORIDA WEST ZONE, NORTH AMERICAN DATUM 1983/1990 ADJUSTMENT.

CONTROL STATIONS UTILIZED:

(1) FOUND 3/4" IRON ROD AND CAP STAMPED "RICHEYPORT 1989", DESIGNATED BY NGS AS "RICHEYPORT", PID = AL7874 (NORTHING = 1401954.99, EASTING = 455717.41)

(2) FOUND 3/4" IRON ROD WITH PUNCH HOLE, INSIDE METAL CASING, LID STAMPED "Z09-019 1991", DESIGNATED BY NGS AS "Z09 019", PID = AL81506 (NORTHING = 1396427.02, EASTING = 445426.97)

(3) FOUND 3/4" IRON ROD WITH PUNCH HOLE, INSIDE METAL CASING, LID STAMPED "T10-023 1991", DESIGNATED BY NGS AS "T10 023", PID = AL8097 (NORTHING = 1424909.29, EASTING = 447024.01)

ALL AS PUBLISHED BY THE NATIONAL GEODETIC SURVEY WEB SITE. (http://www.ngs.noaa.gov)

VERTICAL:

ELEVATIONS ARE BASED ON NORTH AMERICAN VERTICAL DATUM, 1988 (NAVD 88).

CONTROL BENCHMARK UTILIZED:

(1) A FOUND 3/4" IRON ROD WITH PUNCH HOLE, INSIDE A METAL CASING, LID STAMPED "X-668 2006", DESIGNATED BY NGS AS "X 668", PID = DJ8242, ELEVATION = 51.12 FEET, ADJUSTED; AS PUBLISHED BY THE NATIONAL GEODETIC SURVEY WEB SITE.(http://www.ngs.noaa.gov)

CONVERSION FACTOR:

ADD 0.83 FEET TO ELEVATIONS TO CONVERT TO THE NATIONAL GEODETIC SURVEY, NATIONAL GEODETIC VERTICAL DATUM, 1929 ADJUSTMENT (NGVD 29). CONVERSION CALCULATED UTILIZING VERTCON (VERSION 2.0).

JOB NO.	SCALE	DATE	DESIGNED	DRAWN	CHECKED
506-100C	213	5-1-2015	AVS	AVS	PES

NO.	DATE	REVISIONS	APPD.

DESIGNED FOR
ASTURIA COMMUNITY DEVELOPMENT DISTRICT
605 PALENCIA CLUB DRIVE, ST. AUGUSTINE, FLORIDA 32095
PHONE: (904) 810-0500 - FAX: (904) 810-0525

PROJECT NAME: Asturia | PROMENADE PARKWAY

SHEET NAME: **POST-DEVELOPMENT BASIN MAP**

FLORIDA DESIGN CONSULTANTS, INC.
THINK IT. ACHIEVE IT.
3030 STARKEY BOULEVARD, NEW PORT RICHEY, FLORIDA 34655
PHONE: (800) 322-1047 FAX: (727) 848-3646 WWW.FLDESIGN.COM C.A. NO. 7421

©Copyright 2015 Florida Design Consultants, Inc. Drawings and concepts may not be used or reproduced without written permission.

SHEET 2 OF 2

K:\213\Projects\DRNG\ATA\Plans\Promenade Parkway\213_PROMENADE-EPOST-DEV.dwg - May 27, 2015 @ 12:57pm - atprisko

FORM 901.3.A

PASCO COUNTY
ACCESS CONNECTION PERMIT APPLICATION

The following information is required from all applicants directly or indirectly accessing any collector or arterial road or as otherwise directed by the County Engineer:

Basic Information:

Step 1. Name of Project: Asturia - Promenade Parkway

County Assigned Project No.: _____

Project Location (road name/vicinity): North side of State Road 54 approximately 2 miles west of Suncoast Parkway

Speed Limit: 55 mph

Step 2. Existing Property Use (size in square feet and/or the number of units, etc.):

Improved Pasture/Wetland

Step 3. Proposed property use, including any interim traffic generating uses such as heavy vehicles in brackets [ ] (size in square feet and the number of units):

0.5 miles of collector road

Step 4. Provide the location of all existing and proposed connections to the property. This will include a location map and site plan of any physical features (existing and/or proposed) that will have an impact on traffic circulation and sight distance on the County road system and may include an aerial photograph. Examples of such physical features are walls, fences, trees, gates, utility poles, etc.:

See Asturia Promenade Parkway Construction Plans. The proposed connection to the project is right in/right out only (Driveway #6) onto State Road 54.

Step 5. Describe any unique traffic-safety issues with the access; i.e., sight-distance problems:

No traffic safety to report. Proposed access is on State Road 54, right-in/right-out.

Step 6. Trip Generation Data and Total Daily Trip Generation: The *Institute of Transportation Engineers* (ITE) *Handbook*, latest edition, is acceptable as a source. Other sources may be required by and/or authorized of the County Engineer. Land excavation and mining (as defined in Appendix A) and removal of more than 30,000 cubic yards, even as an interim use, is presumed to be a separate and

distinct land use requiring separate trip generation estimates. Such land use is also presumed to generate more than ten (10) percent heavy vehicles. Heavy vehicles adversely affect traffic, because they occupy more roadway space and have poorer operating capabilities than passenger cars, particularly with regard to acceleration, deceleration, and the ability to maintain speed on upgrades. Accordingly, for trip generation purposes, if heavy vehicles are ten (10) percent or more of the trips generated by the proposed land use, the total estimated trips for heavy vehicles shall be multiplied by two (2) unless ITE heavy vehicle data or other County-approved heavy vehicle trip generation data for the land use support a different multiplier; however, in no event shall the multiplier be less than one (1). Provide trip generation from interim traffic generating uses in brackets [ ].

Source: ITE, 9th Edition 2012

ITE code (if used): 210

Existing maximum daily trip generation: 0 (1)

Net increase in maximum daily trip generation: 0 (2)

Total maximum daily trip generation: 0 (Add 1 & 2)

Estimated daily trips from heavy vehicles* included in the total maximum:

N/A (a)

Heavy vehicle multiplier N/A (b)

Additional heavy vehicle trips (multiply a X b-1) N/A (c)

If (c) is ≥ ten (10) percent of total maximum daily trip generation, list additional heavy vehicle trips from (c) N/A (3).

Total maximum daily trip generation with heavy vehicles 0 (Add 1, 2, & 3)

If the total maximum daily trip generation from Step 6 above does not exceed the thresholds set forth in Exhibit 901.5.A, "Size of Development that Generates 100 Daily Driveway Trips," no further information is required. However, a substandard road fair-share payment pursuant to this Code, Section 901.4, as it may be amended from time-to-time, may still be required.

If the total maximum daily trip generation from Step 6 above exceeds the thresholds set forth in Exhibit 901.4.A, "Size of Development that Generates 100 Daily Driveway Trips," then Steps 7 and 8 are required to be completed. Step 7 is required prior to proceeding with "Turn Lane Warrants and Design Criteria," and Step 8 is required to address any substandard road issues.

In addition, a project shall be required to complete a TIS in accordance with this Code, Section 901.5, unless such project is exempt from TIS requirements pursuant to this Code, Section 1301. Notwithstanding the foregoing, the County Engineer may require more detailed access-management information or a more detailed access management study where the County Engineer determines (1) that the information

on the Access Connection Permit Application Form 901.3.A or in the TIS is inadequate to determine compliance with the access management regulations or (2) that the information or study is necessary to ensure the safety of the traveling public.

Additional traffic data required for projects exceeding 100 driveway trips per day unless a TIS is required pursuant to this Code, Section 1301:

Step 7. Existing counts on the public roadway (www.pascocountyfl.net. Recent data, if available on this website, may be acceptable):

a. P.M. peak N/A NB N/A SB 1747 EB 1995 WB

A.M. peak N/A NB N/A SB 1771 EB 1645 WB

Total daily count: 43,208

Date and source of the count: FDOT Count Station #145119 (03/27/2012)

b. Using the ITE *Trip Generation Handbook* or trip rates as approved by the County, provide trip generation of the proposed site during a.m. and p.m. peak periods of the adjacent public road. Provide trip generation from interim traffic generating uses in brackets [ ].

P.M. peak hour trips: _____

A.M. peak hour trips: _____

If additional heavy vehicle trips from Step 6 are ≥ ten (10) percent of the total maximum

Daily Trip Generation: Provide additional a.m. and p.m. peak hour trips for heavy vehicles utilizing the same multiplier and formula from Step 6:

Additional heavy vehicle p.m. peak hour trips: N/A

Additional heavy vehicle a.m. peak hour trips: N/A

Total p.m. peak hour trips with heavy vehicle trips: _____

Total a.m. peak hour trips with heavy vehicle trips: _____

c. Provide a sketch illustrating the distribution of the project traffic during the a.m. and p.m. peak periods of the adjacent public road.

↑
N

Proceed with Warrants and Turn Lane Design Criteria.

Step 8. Perform a Substandard Roadway Analysis in accordance with this Code, Section 901.4.

TURN LANE WARRANTS AND DESIGN CRITERIA

DEFINITIONS OF TERMS

Access Road	Driveways or roads connecting developments, such as shopping centers or office parks, to major roads and do not serve major road through traffic.
Vehicles Per Hour (VPH)	The design hourly volume during the peak fifteen (15) minutes of the highest peak hour expressed in terms of VPH (peak fifteen [15] minute volume times four [4]).
V_A—Approaching Volume (VPH)	Total volume approaching the intersection from the subject direction includes right and left turning and through vehicles.
V_O—Opposing Volume (VPH)	Total volume approaching the intersection from the opposite direction.
V_L—Left Turning Volume (VPH)	Volume of vehicles turning left at the subject intersection.
V_R—Right Turning Volume (VPH)	Volume of vehicles turning right at the subject intersection.
% of Left Turns in V_A	Volume of left turning vehicles divided by the approaching volume at the subject intersection.

TABLE 1

Right Turn Warrants

Unsignalized		
Condition 1	On major roads without stop control (approach).	See Graph Nos. 1A and 1B
Condition 2	Access roads or major through roads with stop control (approach).	$V_R \geq 150$ **OR** There are 5 or more related accidents in 1 year.
Signalized		
Condition 3	On major roads (approach).	$V_R \geq 150$ **AND** The total outside lane approach volume (VA) is at least 200 VPH (including right turn). **OR** There are 5 or more related accidents in 1 year.
Condition 4	On access roads approach.	$V_R \geq 150$ **OR** There are 5 or more related accidents in 1 year.

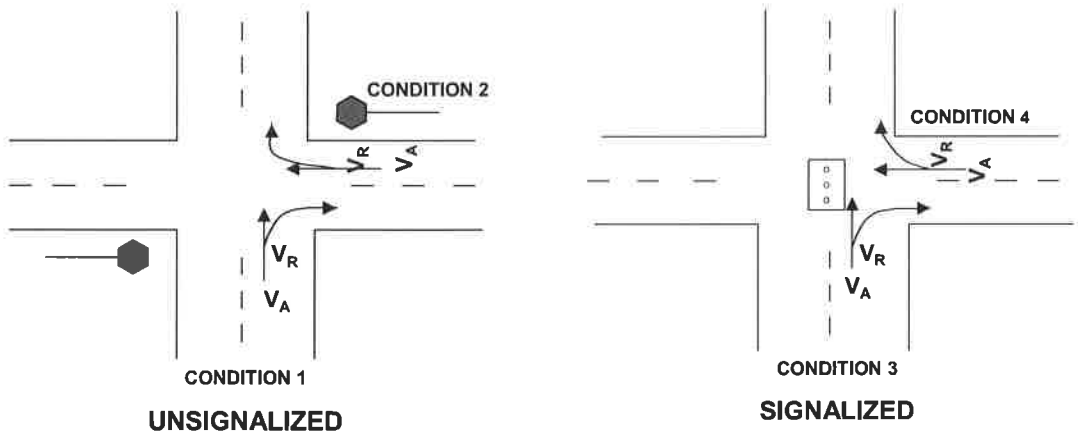

NOTES:

1. When public safety so requires due to site specific conditions, such as limited sight distance, high traveling speed, or the presence of a significant percentage of heavy vehicles, a turn lane may be required by the County Engineer even though the criteria in Graphs 1A and 1B are not met.

2. The provisions of the Right Turn Warrants may be modified by the County Engineer if it is determined that due to site specific constraints, the implementation will not be feasible or practical.

TABLE 2

Left Turn Warrants

Unsignalized		
Condition 1	On major roads without stop control (approach).	See Graph Nos. 2A through 2D
Condition 2	On access roads or through roads (approach).	$V_L \geq 100$ **OR** There are 4 or more related accidents in 1 year.
Signalized		
Condition 3	On major roads (approach).	$V_L \geq 100$ **OR** 20 percent or more of the total approach volume in the inside lane is left turn. **OR** There are 5 or more related accidents in 1 year.
Condition 4	On access roads or through roads approach.	$V_L \geq 100$ **OR** There are 5 or more related accidents in 1 year.

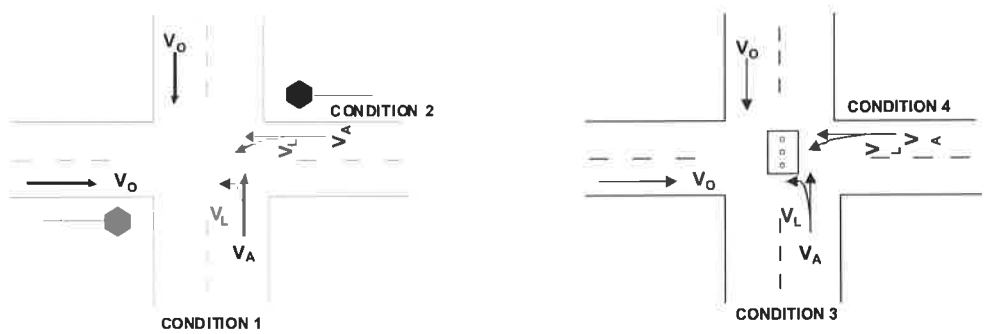

NOTES:

1. An exclusive left turn lane at signalized intersections or on access roads and through roads with stop control are more often needed to reduce the total delay to the approaching vehicles; therefore, use of traffic engineering software, with the approval of the County Engineer, may be used.

2. When public safety so requires due to site specific conditions, such as limited sight distance, high traveling speed, or the presence of a significant percentage of heavy vehicles, a turn lane may be required by the County Engineer even though the criteria in Graphs 2A through 2D are not met.

3. The provisions of the left turn warrants may be modified by the County Engineer if it is determined that due to site specific constraints, the implementation will not be feasible or practical.

4. A dual left turn lane may be required by the County Engineer when the left turn volume exceeds 300 VPH.

5. At high speed (greater than forty-five [45] mph), unsignalized/signalized intersections, a separate left turn lane may be required by the County Engineer for safe operations. A high speed shall be the greater of the posted or operating speed where an operating speed study has been conducted.

TABLE 3

Right Turn Lane Length
(Deceleration and Storage)

Unsignalized		
Condition 1	On major roads without stop control and on major through roads with stop control (approach).	Deceleration Length: FDOT Index 301 Storage Length: 25 feet desirable unless there are site-specific conditions that require a longer storage length.
Condition 2	On access roads (approach).	Deceleration Length: Taper only Storage Length = $V_R/2$
Signalized		
Condition 3	On major roads (approach).	Deceleration Length: FDOT Index 301 Storage Length = $V_R/2$
Condition 4	On access roads (approach).	Deceleration Length: FDOT Index 301 Storage Length = $V_R/2$

NOTES:

1. In many instances, the storage length of a right turn lane at signalized intersections or access/major roads with stop control is dictated by the required storage length for left and/or through movements. Refer to the left turn section for determining the storage length for a left turn.

2. If the right turn flow is limited due to heavy volume of conflicting movements, then the storage length shall be based on the left turn storage length formula.

3. The provision of storage lengths and deceleration lengths may be modified or waived by the County Engineer if it is determined that, due to site specific constraints, the implementation will not be feasible or practical.

4. Traffic engineering software, with the approval of the County Engineer, may be used to determine the storage length for right turns.

TABLE 4

Left Turn Lane Lengths
(Deceleration and Storage)

Unsignalized		
Condition 1	On major roads (approach).	Deceleration Length: FDOT Index 301 Storage Length = 25 X V_L/30
Condition 2	On access roads (approach).	Deceleration Length: Taper only Storage Length = 25 X V_L/30
Signalized		
Condition 3	On major roads (approach).	Deceleration Length: FDOT Index 301 Storage Length = 2 X 25 X V_L/N
Condition 4	On access roads (approach).	Deceleration Length: FDOT Index 301 Storage Length = 2 X 25 X V_L/N

NOTES:

1. N = The number of traffic signal cycles per hour. Use thirty (30) as a default (assumes 120-second cycle length).

2. If the formula yields a storage length of less than fifty (50) feet for unsignalized intersections, then a minimum storage of fifty (50) feet shall be provided.

3. If the formula yields a storage length of less than 100 feet for signalized intersections, then a minimum storage of 100 feet shall be provided.

4. The provision of storage and deceleration lengths may be modified or waived by the County Engineer if it is determined that due to site specific constraints, the implementation will not be feasible or practical.

5. In some instances at signalized intersections or on access/major roads with stop control, the storage length of the left turn is dictated by the through or right movements. Unless otherwise approved by the County Engineer, the storage length for all movements shall be calculated and the highest length shall be used. For through storage length, the same formula as the left turn can be used. Refer to right turn section for determining the storage length for right turns.

6. Traffic engineering software, with the approval of the County Engineer, may be used to determine the storage length for right turns.

GRAPH 1A. RIGHT-TURN LANE WARRANTS – TWO-LANE FACILITIES

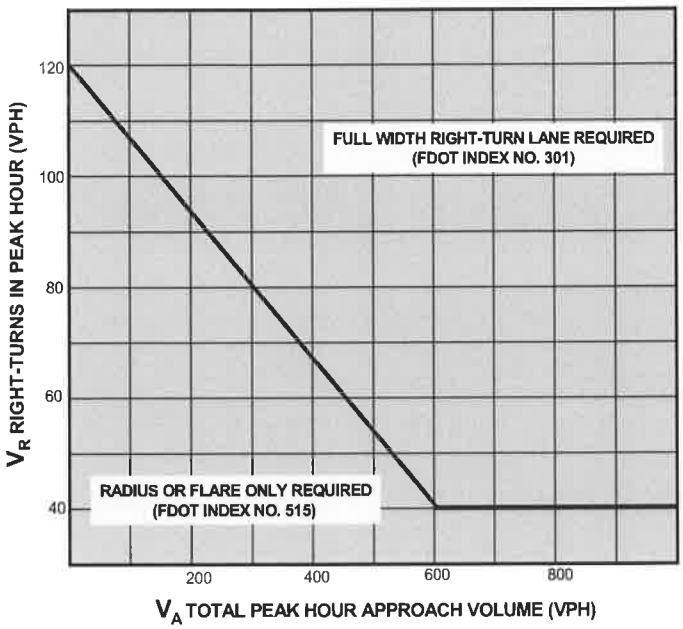

NOTE: For posted speeds at or under forty-five (45) mph, peak hour right turns greater than forty (40) VPH, and total peak hour approach less than 300 VPH, adjust right turn volumes. Adjust peak hour right turns = peak hour right turns—twenty (20).

GRAPH 1B. RIGHT-TURN LANE WARRANTS
FOUR- OR SIX-LANE FACILITIES

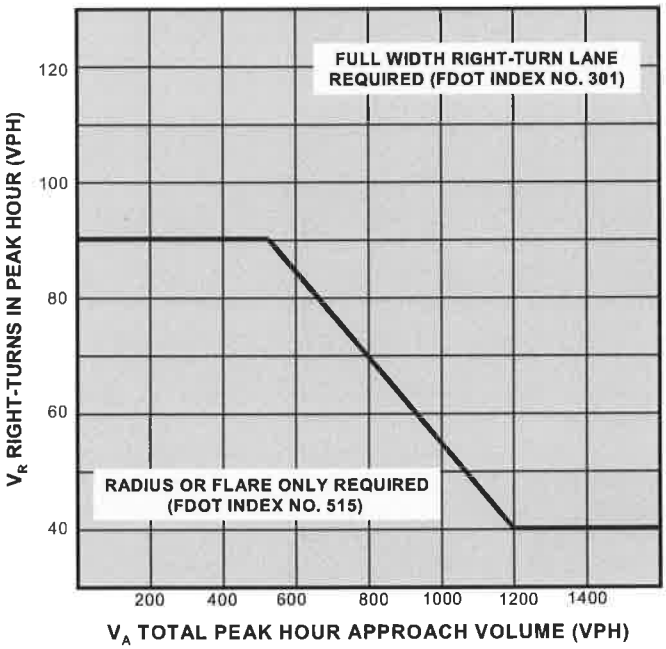

NOTE: For application on high speed highways.

Graphs 1A & 1B Source: National Cooperative Highway Research Program, Report No. 279.

GRAPH 2A. LEFT-TURN LANE WARRANTS – TWO-LANE FACILITIES (≤ 40 MPH)

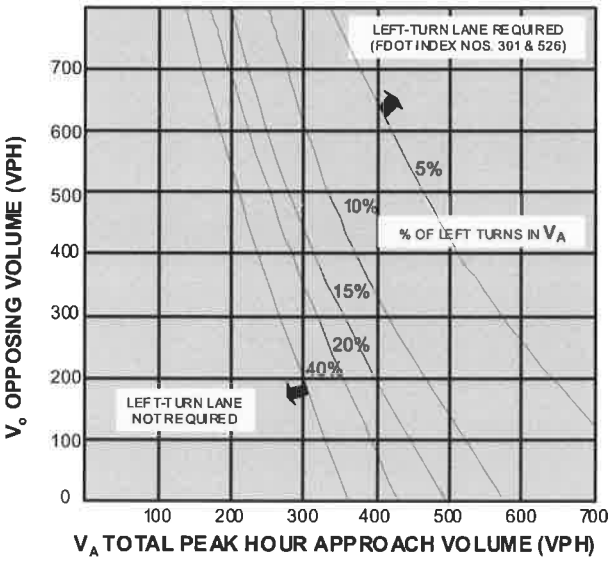

NOTE: Left-turn lane not required when intersection of V_A and V_O is below the curve corresponding to the % of left turns in V_A.

GRAPH 2B. LEFT-TURN LANE WARRANTS – TWO-LANE FACILITIES (45-50 MPH)

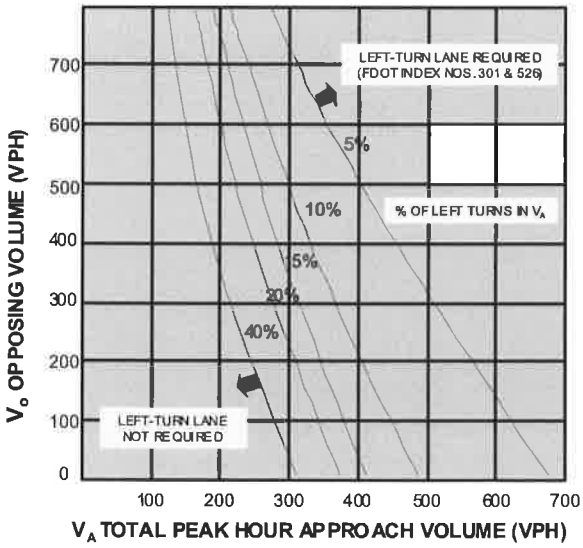

NOTE: Left-turn lane not required when intersection of V_A and V_O is below the curve corresponding to the % of left turns in V_A.

Graphs 2A & 2B Source: National Cooperative Highway Research Program, Report No. 279.

GRAPH 2C. LEFT-TURN LANE WARRANTS – TWO-LANE FACILITIES (55-60 MPH)

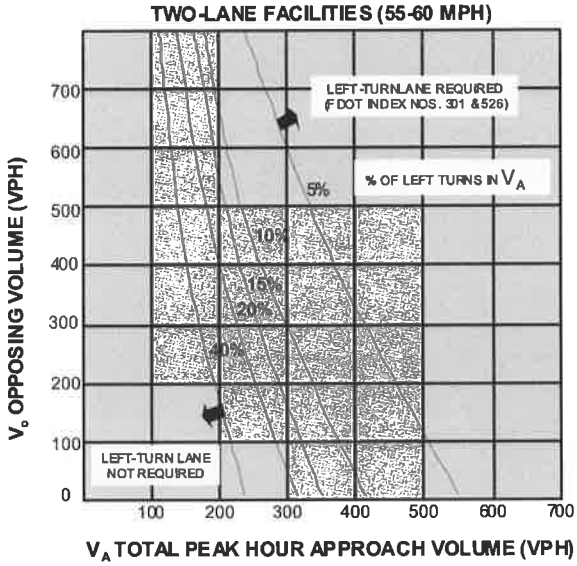

NOTE: Left-turn lane not required when intersection of V_A and V_O is below the curve corresponding to the % of left turns in V_A.

GRAPH 2D. LEFT-TURN LANE WARRANTS – FOUR- AND SIX-LANE FACILITIES

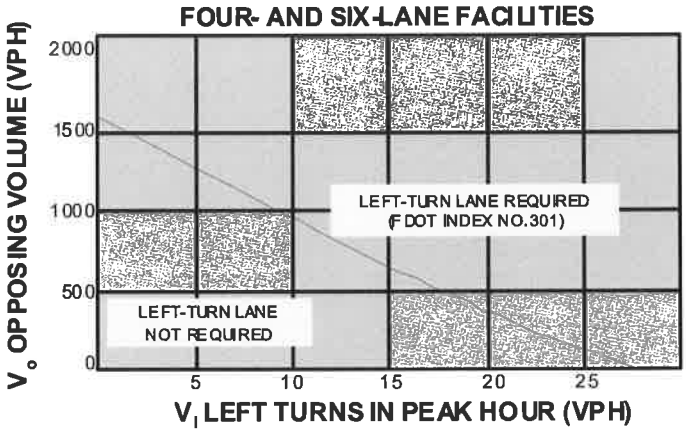

NOTE: When V_O < 400 VPH, a left-turn lane is not normally warranted unless the advancing volume (V_A) in the same direction as left-turning traffic exceeds 400 VPH. (V_A > 400 VPH).

Graphs 2C & 2D Source: National Cooperative Highway Research Program, Report No. 279.

SAMPLE PROBLEM NO. 1

Steps 1-6

1. Ninety-four (94) unit apartment complex. West side of Rowan Road, north of Nebraska Avenue (Main Street). Four (4) lane urban. Speed limit forty-five (45) mph.

2. Existing use—vacant.

3. Proposed use—apartments.

4. Site plan, etc., not included in sample.

5. Proposed access on Rowan Road, west side, at existing median opening, approximately 365 feet north of Indiana Avenue. No existing turn lane facilities north or southbound. No other access to this site is proposed.

6. Source: ITE, 6th Edition
   ITE Code: 220
   Existing Maximum Trip Generation: 0
   Net Increase in Maximum Trip Generation: 698
   From ITE: No. of Trips = (5.994 X 94 units) + 134.114 = 698
   Total Maximum Daily Trip Generation: 698

If the total maximum daily trip generation is greater than 100 and no TIS is required pursuant to this Code, Section 1301, proceed with Step 7.

Step 7

7. From the Pasco County Traffic Operations Division, Traffic Count File for Rowan Road (C.R. 77) (Section 820.1):

P.M. Peak	455	385	N/A	N/A
	NB	SB	EB	WB

A.M. Peak Not Available

Total Daily Count: 23,624 (ADT) 10/4/01

From ITE Manual, P.M. Peak Hour Trips = (0.541 X 94 units) + 18.744 = 70 trips

A.M. Peak Hour Trips: N/A

From ITE, 67 percent (47) entering and 33 percent (23) exiting. Say 50/50 directional distribution.

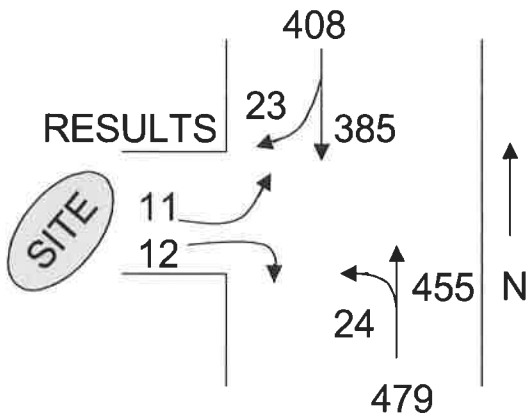

Proceed to Warrants and Turn Lane Design Criteria.

Right Turn Warrants

From Table 1, Condition 1, see Graph 1B to check warrants for the southbound, right turn lane on Rowan Road.

$V_R = 23$, $V_A = 385 + 23 = 408$

From Graph 1B, a full width, right turn lane is not warranted.

Left Turn Warrants

From Table 2, Condition 1, see Graph 2D to check warrants for the northbound, left turn lane on Rowan Road.

$V_L = 24$, $V_A = 455 + 24 = 479$, $V_O = 385 + 23 = 408$

From Graph 2D, the intersection of V_O and V_L is to the right of the curve; therefore, a left turn lane is required.

Left Turn Lane Lengths

From Table 4, Condition 1, the required deceleration length is determined by FDOT Index No. 301. A total deceleration distance (L) of 185 feet is required for the forty-five (45) mph urban condition and includes the fifty (50) foot taper length.

The required storage length (queue) is calculated as follows:

Storage Length = 25 X V_L/30 = 25 X 24/30 = 20 feet

Per Note 1, the required minimum storage length is fifty (50) feet. This is in addition to the 185-foot deceleration, for a total deceleration and storage length of 235 feet.

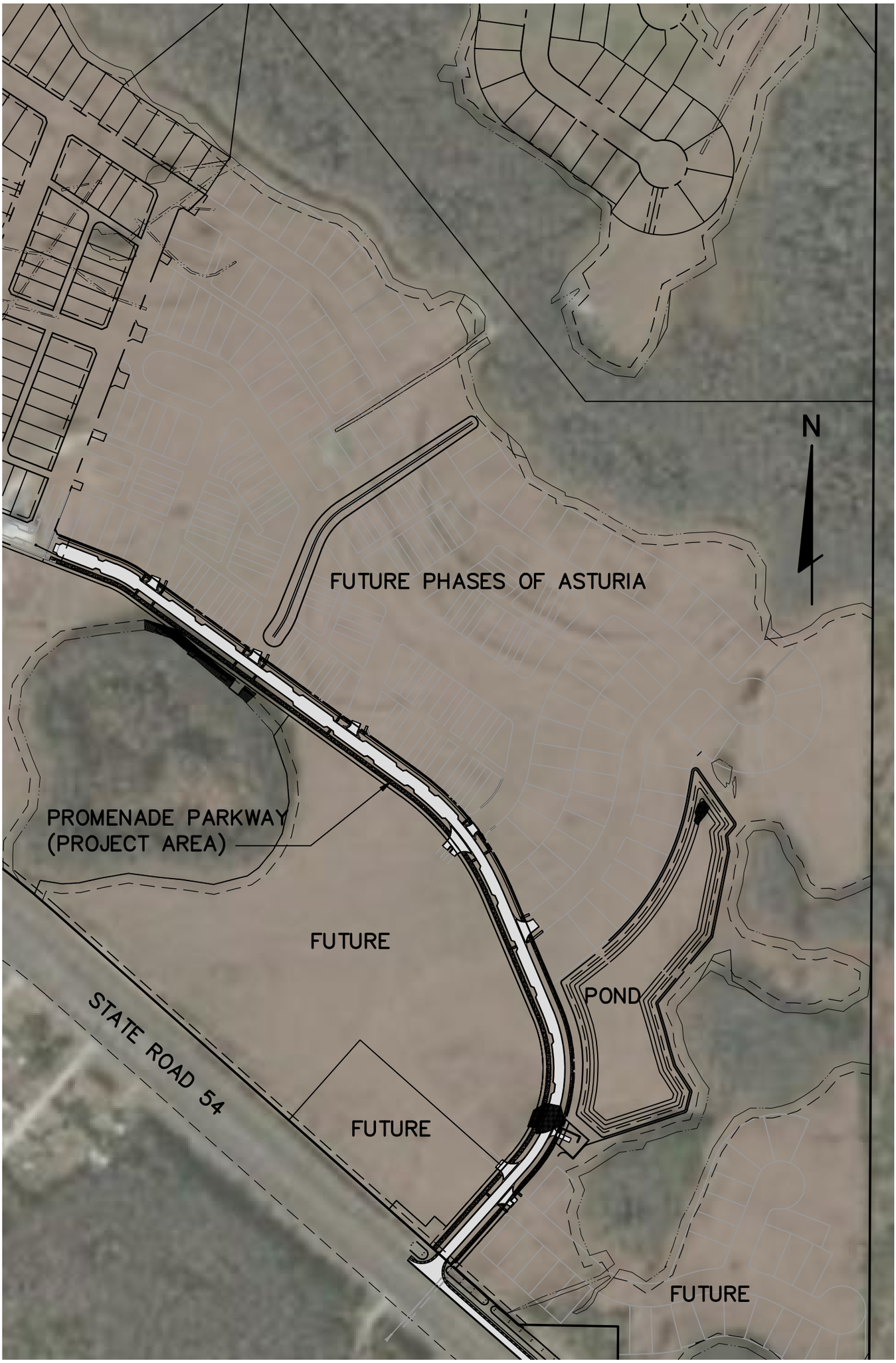

FLORIDA DESIGN
CONSULTANTS, INC.
THINK IT. ACHIEVE IT.

3030 STARKEY BOULEVARD, NEW PORT RICHEY, FLORIDA 34655
PHONE: (800) 532 - 1047 FAX: (727) 848 - 3648 WWW.FLDESIGN.COM L.B. NO.6707

©Copyright 2015 Florida Design Consultants, Inc. Drawings and concepts may not be used or reproduced without written permission.

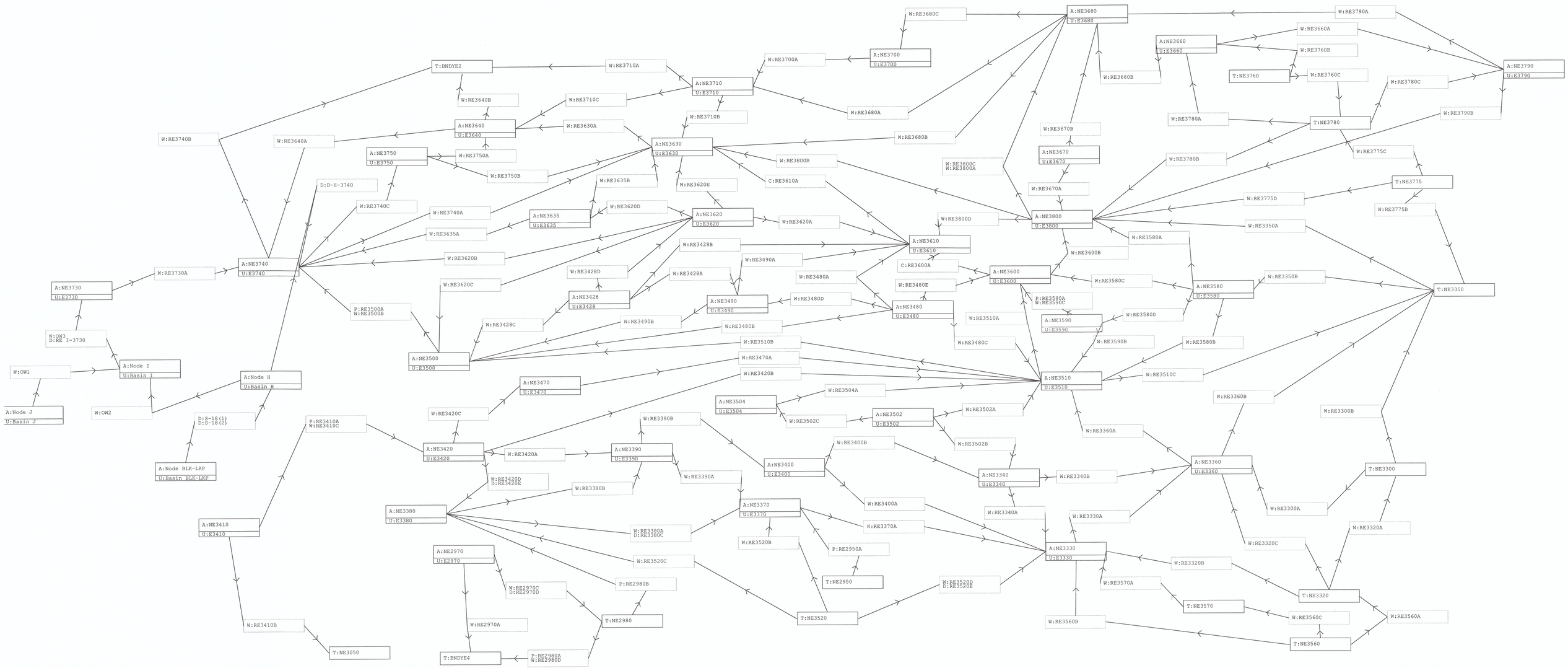

Asturia - Promenade
Pre - developed
Conditions
Node Diagram
5-26-2015

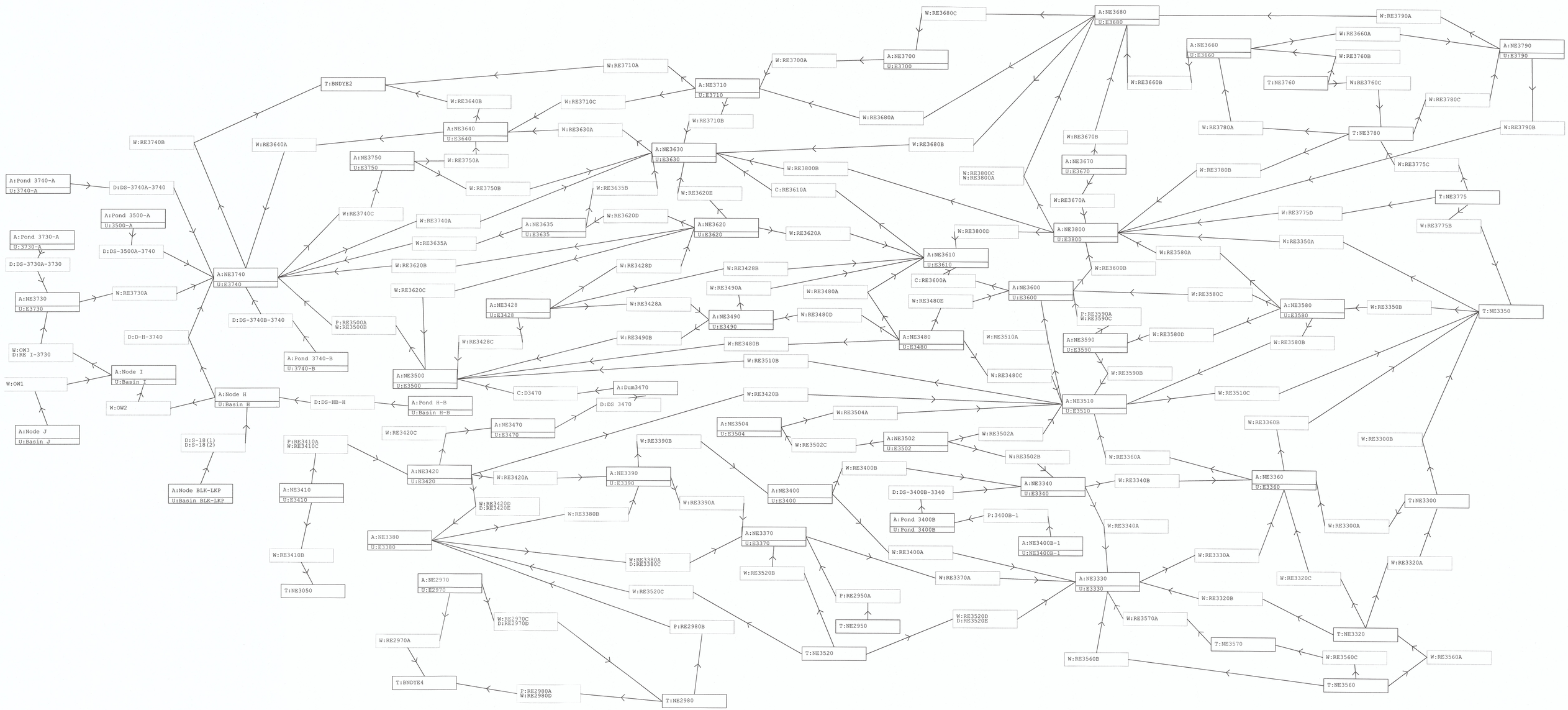

Asturia - Promenade
Post - Developed
Conditions
Node Diagram
5-26-2015