Volkswagen
Of Wesley Chapel

SR 56 And Silver Maple Pkwy
Wesley Chapel, Florida

Owner:

S & D GIANT REAL ESTATE, LLC

3936 US Highway 19
New Port Richey, Florida 34652
Phone: (727) 569-0999 Ext.4190
Scott Fink

Architect/Engineer:

SPRING ENGINEERING, INC.

3014 U.S. Highway 19
Holiday, Florida 34691
(727) 938-1516
Roland P. Dove, P.E.
Jay Doucette

Surveyor:

GENESIS GROUP

3910 North US Hwy 301, Ste 140
Tampa, Florida 33619
PHONE: (813) 620-4500

Location Map:

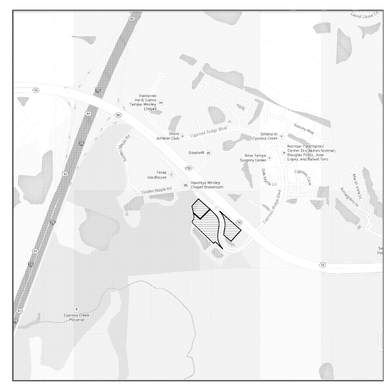

SECTION 26, TOWNSHIP 26 SOUTH, RANGE 19 EAST

Index of Drawings:

T1.0 TITLE SHEET

C1.0 EXISTING CONDITIONS
C2.0 SITE PLAN
C2.1 DETAILS AND SECTIONS
C3.0 PAVING, GRADING AND DRAINAGE PLAN
C3.1 CONSTRUCTION SURFACE WATER MANAGEMENT PLAN
C3.2 NPDES NOTES AND DETAILS
C4.0 UTILITY PLAN
C4.1 UTILITY DETAILS
C4.2 PHOTOMETRIC PLAN
C5.0 LANDSCAPE PLAN
C5.1 LANDSCAPE AND IRRIGATION DETAILS
C6.0 IRRIGATION PLAN
C7.0 GENERAL NOTES

PRELIMINARY / CONSTRUCTION STORMWATER MANAGEMENT PLAN

SPRING ENGINEERING, INC.
ARCHITECTURE - ENGINEERING - LAND PLANNING
3014 U.S. HWY. 19, HOLIDAY, FL. (727) 938-1516

THE PROPOSED DRAINAGE PLAN WAS BASED ON THE EXISTING FIELD CONDITIONS OF THE ABUTTING PROPERTY.

THIS PLAN HAS BEEN CERTIFIED BY THE DESIGN ENGINEER TO BE IN SUBSTANTIAL CONFORMANCE WITH THE MANUAL OF UNIFORM MINIMUM STANDARDS FOR DESIGN, CONSTRUCTION AND MAINTENANCE OF HIGHWAYS, AS REQUIRED BY SECTION 336.045, FLORIDA STATUTES.

THIS DRAWING AND THE DESIGN SHOWN ARE THE PROPERTY OF SPRING ENGINEERING, INC. AND ARE NOT TO BE REPRODUCED, COPIED, PUBLISHED, OR USED IN WHOLE OR PART WITHOUT WRITTEN CONSENT. THEY ARE TO BE USED ONLY FOR THE SITE AND PROJECT IDENTIFIED AND SHALL BE RETURNED UPON REQUEST.

100%
CONSTRUCTION DOCS.
ISSUE DATE: 08.17.15

REVISIONS

REV	DATE	DESCRIPTION

ROLAND P. DOVE, P.E.
P.E. NO. 38933
DATE

Volkswagen
Of Wesley Chapel
SR 56 And Silver Maple Pkwy
Wesley Chapel, Florida

CONTRACT DATE:
March 10, 2014

SPRING ENGINEERING, INC.
ENGINEERING • LAND PLANNING • ARCHITECTURE
3014 U.S. HWY 19, HOLIDAY, FL (727) 938-1516
FL COA NO. 00005158 & LICENSE NO. AA-C001747

TITLE SHEET

DESIGNED BY: JAY
DRAWN BY: JAY
CHECKED BY: RPD
JOB NO.
2013-55
SHEET NO.
T1.0

SECTION 26, TOWNSHIP 26 SOUTH, RANGE 19 EAST
PASCO COUNTY, FLORIDA

CURVE TABLE

CURVE	LENGTH	RADIUS	DELTA	CHORD	BEARING
C1(D)(F)	235.32	250.00	53°55'57"	226.73	S19°12'33"E
C2(D)(F)	231.64	350.00	37°55'13"	227.44	S11°12'11"E
C3(D)(F)	77.09	300.00	14°43'25"	76.88	S37°31'31"E
C4(D)(C)	891.43	2431.83	21°00'10"	886.45	N59°30'52"W
C5(D)(F)	329.46	350.00	53°56'00"	317.43	N19°12'33"W

LINE TABLE

LINE	LENGTH	BEARING
L21(D)(F)	22.48	N10°15'00"E
L22(D)(F)	30.28	N38°42'47"W
L23(D)(F)	32.35	N40°46'34"W
L24(D)(F)	32.30	N38°42'59"W
L25(D)(F)	10.47	N38°42'59"W
L26(D)(F)	39.11	N33°27'16"W
L27(D)(F)	41.97	N47°13'50"W
L28(D)(F)	37.50	N09°23'31"E
L29(D)(F)	41.80	N22°30'14"E
L30(D)(F)	33.20	N07°54'46"E
L31(D)(F)	23.25	N08°20'09"E
L32(D)(F)	56.73	N13°42'11"E
L33(D)(F)	31.21	N04°08'02"W
L34(D)(F)	45.09	N36°29'10"E
L35(D)(F)	52.04	N06°04'00"E
L36(D)(F)	46.22	N07°04'16"W
L37(D)(F)	22.32	N10°22'53"W
L38(D)(F)	1.25	N79°34'27"E
L39(D)(F)	48.85	S43°49'04"W
L40(D)(F)	69.06	N74°53'29"W

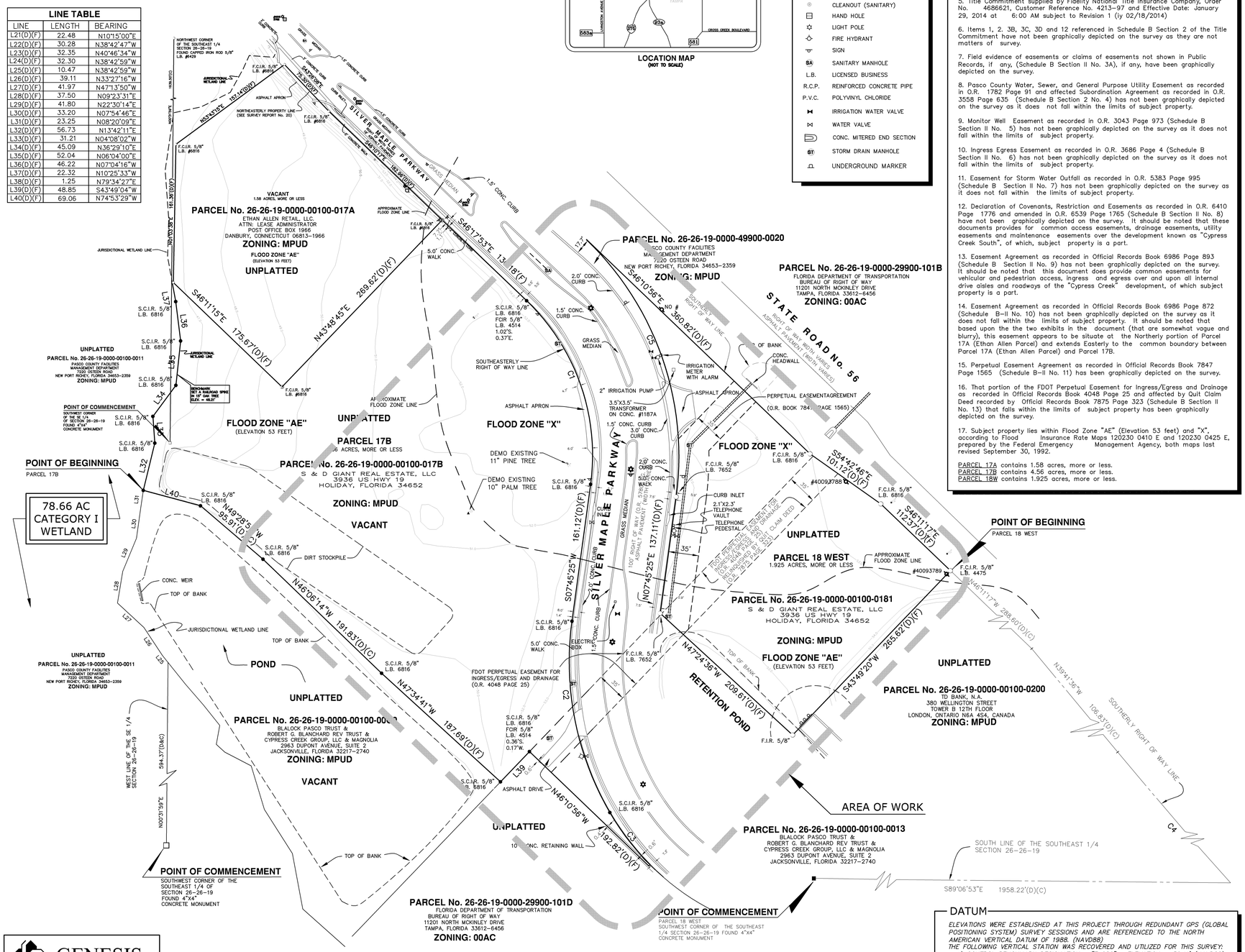

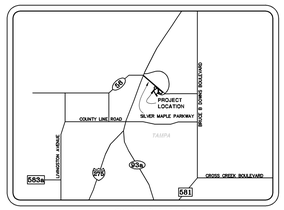

LOCATION MAP
(NOT TO SCALE)

LEGEND

O.R.	OFFICIAL RECORDS
PG.	PAGE
FDOT	FLORIDA DEPARTMENT OF TRANSPORTATION
	FOUND CAPPED IRON ROD 5/8" L.B. #6816
	SET CAPPED IRON ROD 5/8" L.B. #6816
	CLEANOUT (SANITARY)
	HAND HOLE
	LIGHT POLE
	FIRE HYDRANT
	SIGN
SA	SANITARY MANHOLE
L.B.	LICENSED BUSINESS
R.C.P.	REINFORCED CONCRETE PIPE
P.V.C.	POLYVINYL CHLORIDE
	IRRIGATION WATER VALVE
	WATER VALVE
	CONC. MITERED END SECTION
ST	STORM DRAIN MANHOLE
	UNDERGROUND MARKER

SURVEYOR NOTES

1. This survey not valid unless embossed with a raised surveyors seal.

2. Underground encroachments such as utilities and foundations, that may exist, have not been located.

3. Bearings shown hereon are based upon the Florida State Plane Coordinate System, West Zone, 1983–1990 adjustment, holding the West line of the Southeast 1/4 of Section 26, Township 26 South, Range 19 East, Pasco County, Florida as being N.00°31'59"E.

4. Legal description shown hereon in accord with shown in the Title Commitment.

5. Title Commitment supplied by Fidelity National Title Insurance Company, Order No. 4686621, Customer Reference No. 4213–97 and Effective Date: January 29, 2014 at 6:00 AM subject to Revision 1 (iy 02/18/2014)

6. Items 1, 2. 3B, 3C, 3D and 12 referenced in Schedule B Section 2 of the Title Commitment have not been graphically depicted on the survey as they are not matters of survey.

7. Field evidence of easements or claims of easements not shown in Public Records, if any, (Schedule B Section II No. 3A), if any, have been graphically depicted on the survey.

8. Pasco County Water, Sewer, and General Purpose Utility Easement as recorded in O.R. 1782 Page 91 and affected Subordination Agreement as recorded in O.R. 3558 Page 635 (Schedule B Section 2 No. 4) has not been graphically depicted on the survey as it does not fall within the limits of subject property.

9. Monitor Well Easement as recorded in O.R. 3043 Page 973 (Schedule B Section II No. 5) has not been graphically depicted on the survey as it does not fall within the limits of subject property.

10. Ingress Egress Easement as recorded in O.R. 3686 Page 4 (Schedule B Section II No. 6) has not been graphically depicted on the survey as it does not fall within the limits of subject property.

11. Easement for Storm Water Outfall as recorded in O.R. 5383 Page 995 (Schedule B Section II No. 7) has not been graphically depicted on the survey as it does not fall within the limits of subject property.

12. Declaration of Covenants, Restriction and Easements as recorded in O.R. 6410 Page 1776 and amended in O.R. 6539 Page 1765 (Schedule B Section II No. 8) have not been graphically depicted on the survey. It should be noted that these documents provides for common access easements, drainage easements, utility easements and maintenance easements over the development known as "Cypress Creek South", of which, subject property is a part.

13. Easement Agreement as recorded in Official Records Book 6986 Page 893 (Schedule B Section II No. 9) has not been graphically depicted on the survey. It should be noted that this document does provide common easements for vehicular and pedestrian access, ingress and egress over and upon all internal drive aisles and roadways of the "Cypress Creek" development, of which subject property is a part.

14. Easement Agreement as recorded in Official Records Book 6986 Page 872 (Schedule B–II No. 10) has not been graphically depicted on the survey as it does not fall within the limits of subject property. It should be noted that based upon the the two exhibits in the document (that are somewhat vague and blurry), this easement appears to be situate at the Northerly portion of Parcel 17A (Ethan Allen Parcel) and extends Easterly to the common boundary between Parcel 17A (Ethan Allen Parcel) and Parcel 17B.

15. Perpetual Easement Agreement as recorded in Official Records Book 7847 Page 1565 (Schedule B–II No. 11) has been graphically depicted on the survey.

16. That portion of the FDOT Perpetual Easement for Ingress/Egress and Drainage as recorded in Official Records Book 4048 Page 25 and affected by Quit Claim Deed recorded by Official Records Book 7875 Page 323 (Schedule B Section II No. 13) that falls within the limits of subject property has been graphically depicted on the survey.

17. Subject property lies within Flood Zone "AE" (Elevation 53 feet) and "X", according to Flood Insurance Rate Maps 120230 0410 E and 120230 0425 E, prepared by the Federal Emergency Management Agency, both maps last revised September 30, 1992.

PARCEL 17A contains 1.58 acres, more or less.
PARCEL 17B contains 4.56 acres, more or less.
PARCEL 18W contains 1.925 acres, more or less.

LEGAL DESCRIPTION

PARCEL 17A
A parcel of land lying in the Southeast 1/4 of Section 26, Township 26 South, Range 19 East, Pasco County, Florida and being more particularly described as follows:

Commence at a found 4"x 4" concrete monument marking the Southwest corner of the Southeast 1/4 of Section 26, Township 26 South, Range 19 East, Pasco County, Florida; thence N.00°31'59"E., on the West line of the Southeast 1/4 of said Section 26 a distance of 1037.50 feet; thence S.89°28'01"E., departing the West line of the Southeast 1/4 of said Section 26 a distance of 2.02 feet to the Point of Beginning; thence N.01° 03'38"E., a distance of 161.36 feet; thence N.53°43'15"E., a distance of 157.14 feet to a point on the Southerly right of way line of Silver Maple Parkway; thence S.43°26'08"E., on the Southerly right of way line of said Silver Maple Parkway a distance of 75.30 feet; thence S.46°10'17"E., continuing on the Southerly right of way line of said Silver Maple Parkway a distance of 182.96 feet; thence S.43°48'45"W., departing the Southerly right of way line of said Silver Maple Parkway a distance of 269.62 feet; thence N.46° 11'15"W., a distance of 175.67 feet to the Point of Beginning.

Easement Parcel

TOGETHER WITH those certain perpetual non–exclusive easements for utilities, drainage, pedestrian and vehicular access and maintenance of Common Property, as more particularly described in that certain Declaration of Covenants, Restrictions and Easements of Cypress Creek South recorded in Official Records Book 6410, Page 1776, as amended by First Amendment to Declaration of Covenants, Restrictions, and Easements recorded in Official Records Book 6539, Page 1765, all of the Public Records of Pasco County, Florida.

ALSO TOGETHER WITH that certain perpetual non–exclusive, irrevocable easement for vehicular and pedestrian access, ingress and egress created by that certain Easement Agreement recorded in O.R. Book _____, at Page _____, of the Public Records of Pasco County, Florida.
\pt100.8;
\ptz;

PARCEL 17B
A parcel of land located in Section 26, Township 26 South, Range 19 East, in Pasco County, Florida, and being more particularly described as follows:

Commence at the Southwest corner of the Southeast 1/4 of said Section 26, thence N 00°31' 59" E., on the West line of the Southeast 1/4 of said Section 26, a distance of 594.37 feet to the POINT OF BEGINNING; thence N 38°42' 59" W., departing the West line of the Southeast 1/4 of said Section 26 a distance of 10.47 feet; thence N 33°27' 16" W., a distance of 39.11 feet; thence N 47°13' 50" W., a distance of 41.97 feet; thence N 09°23' 31" E., a distance of 37.50 feet; thence N 22°30' 14" E., a distance of 41.80 feet; thence N 07°54' 46" E., a distance of 33.20 feet; thence N 08°20' 09" E., a distance of 23.25 feet; thence N 13°42' 11" E., a distance of 56.73 feet; thence N 04°08' 02" W., a distance of 31.21 feet; thence N 36°29' 10" E., a distance of 45.09 feet; thence N 06°04' 00" E., a distance of 52.04 feet; thence N 07°04' 16" W. a distance of 46.22 feet; thence N 10°25' 33" W., a distance of 22.32 feet: thence N 79°34' 27" E., a distance of 1.25 feet; thence S 46°11' 15" E., a distance of 175.67 feet; thence N 43°48' 45" E., a distance of 269.61 feet to a point on the Southeasterly right of way line of Silver Maple Parkway thence S 46°17'53" E., on the Southeasterly right of way line of said Silver Maple Parkway a distance of 136.18 feet to the point of curvature of a curve to the right; thence continuing on the Southeasterly right of way line of said Silver Maple Parkway and on said curve to the right having a radius of 250.00 feet, a central angle of 53°55' 57", a chord bearing of S 19°12' 33" E., a chord distance of 226.73 feet, thence on the arc of said curve an arc length of 235.32 feet to the end of said curve; thence S 07°45' 25" W., continuing on the Southeasterly right of way line of said Silver Maple Parkway a distance of 161.12 feet to the point of curvature of a curve to the left; thence continuing on the Southeasterly right of way line of said Silver Maple Parkway and on said curve to the left having a radius of 350.00 feet, a central angle of 37°55' 13", a chord bearing of S 11°12' 11" E., a chord distance of 227.44 feet, thence on the arc of said curve an arc length of 231.64 feet to a point of compound curvature of a curve to the left; thence continuing on the Southeasterly right of way line of said Silver Maple Parkway and on said curve to the left having a radius of 300.00 feet, a central angle of 14°43' 25", a chord bearing of S 37°31' 31" E., a chord distance of 76.88 feet, thence on the arc of said curve an arc length of 77.09 feet to the end of said curve; thence S 43°49' 04" W., departing the Southeasterly right of way line of said Silver Maple Parkway a distance of 2.07 feet; thence N 46°10' 56" W., a distance of 192.82 feet; thence S 43°49' 04" W., a distance of 48.85 feet; thence N 47°34' 41" W., a distance of 187.69 feet; thence N 46°06' 14" W., a distance of 191.83 feet; thence N 49°28' 55" W., a distance of 95.91 feet; thence N 74°53' 29" W., a distance of 69.06 feet to the POINT OF BEGINNING.

EASEMENT PARCELS

TOGETHER WITH those certain perpetual non–exclusive easements for utilities, drainage, pedestrian and vehicular access and maintenance of Common Property, as more particularly described in that certain Declaration of Covenants, Restrictions and Easements of Cypress Creek South recorded in Official Records Book 6410, Page 1776, as amended by First Amendment to Declaration of Covenants, Restrictions and Easements recorded in Official Records Book 6539, Page 1765, all of the public records of Pasco County, Florida.

ALSO TOGETHER WITH that certain perpetual, non–exclusive, irrevocable easement for vehicular and pedestrian access, ingress and egress over and upon all internal drive aisles and roadways as created by that certain Easement Agreement recorded in Official Records Book 6986, page 893, of the Public Records of Pasco County, Florida.

ALSO TOGETHER WITH that certain non–exclusive irrevocable easement for the construction of a curb cut and for vehicular and pedestrian access, ingress and egress over and upon curb cut, as created by that certain Easement Agreement (Curb Cut) recorded in Official Records Book 6986, page 872, of the Public Records of Pasco County, Florida.

PARCEL 18 WEST
A parcel of land lying in the Southeast 1/4 of Section 26, Township 26 South, Range 19 East, Pasco County, Florida and being more particularly described as follows:

Commence at a 4"x 4" concrete monument marking the Southwest corner of the Southeast 1/4 of said Section 26; thence S.89°06'53" E. on the South line of the Southeast 1/4 of said Section 26, a distance of 1958.22 feet to a point on the Southerly right of way line of State Road No. 56 and a point on a non–tangent curve concave Northeasterly, having a radius of 2431.83 feet, a central angle of 21°00'10", a chord distance of 886.45 feet and a chord bearing of N.59°30'52" W., thence on the arc of said curve and on the Southerly right of way line of said State Road No. 56, a distance of 891.43 feet to the curve's end; thence N.39°41'36" W., continuing on the Southerly right of way line of said State Road No. 56, a distance of 106.83 feet; thence N.46°11'17" W., continuing on the Southerly right of way line of said State Road No. 56, a distance of 288.60 feet to the Point of Beginning; thence S.43°49'20" W., departing the Southerly right of way line of State Road No. 56, a distance of 265.62 feet; thence N. 47° 24'36" W., a distance of 209.61 feet to a point on the Northeasterly right of way line of Silver Maple Parkway; thence N.07°45'25" E., on the Northeasterly right of way line of said Silver Maple Parkway a distance of 137.11 feet to the point of curvature of a curve to the left, having: a radius of 350.00 feet, a central angle of 53°55'57", a chord bearing of N.19°12'33" W. and a chord length of 317.43 feet; thence along the arc of said curve and continuing on the Northeasterly right of way line of said Silver Maple Parkway, an arc length of 329.46 feet to the end of said curve; thence N.43°49'28" E., a distance of 0.29 feet to a point on the Southerly right of way line of said State Road No. 56; thence S.46°10'56" E., on the Southerly right of way line of said State Road No. 56 a distance of 360.82 feet; thence S.54°42'46" E., continuing on the Southerly right of way line of said State Road No. 56 a distance of 101.12 feet; thence S.46°11'17" E., continuing on the Southerly right of way line of said State Road No. 56 a distance of 112.37 feet to the Point of Beginning.

EASEMENT PARCELS

TOGETHER WITH those certain perpetual non–exclusive easements for utilities, drainage, pedestrian and vehicular access and maintenance of Common Property, as more particularly described in that certain Declaration of Covenants, Restrictions and Easements of Cypress Creek South recorded in Official Records Book 6410, Page 1776, as amended by First Amendment to Declaration of Covenants, Restrictions and Easements recorded in Official Records Book 6539, Page 1765, all of the public records of Pasco County, Florida.

ALSO TOGETHER WITH that certain perpetual, non–exclusive, irrevocable easement for vehicular and pedestrian access, ingress and egress over and upon all internal drive aisles and roadways as created by that certain Easement Agreement recorded in Official Records Book 6986, page 893, of the Public Records of Pasco County, Florida.

ALSO TOGETHER WITH that certain non–exclusive irrevocable easement for the construction of a curb cut and for vehicular and pedestrian access, ingress and egress over and upon curb cut, as created by that certain Easement Agreement (Curb Cut) recorded in Official Records Book 6986, page 872, of the Public Records of Pasco County, Florida.

DATUM

ELEVATIONS WERE ESTABLISHED AT THIS PROJECT THROUGH REDUNDANT GPS (GLOBAL POSITIONING SYSTEM) SURVEY SESSIONS AND ARE REFERENCED TO THE NORTH AMERICAN VERTICAL DATUM OF 1988. (NAVD88).
THE FOLLOWING VERTICAL STATION WAS RECOVERED AND UTILIZED FOR THIS SURVEY:
a) CONTROL BENCHMARK DESIGNATION "E 680" ELEVATION = 56.11' (NAVD88)

GENESIS GROUP
Engineers • Landscape Architects • Planners • Surveyors
3910 North US Highway 301, Suite 140 Tampa, Florida 33619
(813)620–4500 Fax (813)620–4980 www.gglse.com
Jacksonville • Tallahassee • Tampa
FL EB Reg. No. 0007851 FL LB Reg. No. 0006816 FL LC Reg. No. 0000329

NORTH

EXISTING CONDITIONS
SCALE: 1" = 60'

60 30 0 60 120

THIS DRAWING AND THE DESIGN SHOWN ARE THE PROPERTY OF SPRING ENGINEERING, INC. AND ARE NOT TO BE REPRODUCED, COPIED, PUBLISHED, OR USED IN WHOLE OR PART WITHOUT WRITTEN CONSENT. THEY ARE TO BE USED ONLY FOR THE SITE AND PROJECT IDENTIFIED AND SHALL BE RETURNED UPON REQUEST.

100%
CONSTRUCTION DOCS.
ISSUE DATE: 08.17.15

REVISIONS

REV	DATE	DESCRIPTION

ROLAND P. DOVE, P.E.
P.E. NO. 36933
DATE

Volkswagen
Of Wesley Chapel
SR 56 And Silver Maple Pkwy
Wesley Chapel, Florida

CONTRACT DATE:
March 10, 2014

SPRING ENGINEERING, INC.
ENGINEERING • LAND PLANNING • ARCHITECTURE
3014 U.S. HWY 19, HOLIDAY, FL (727) 938–1516
FL COA NO. 00005158 & LICENSE NO. AA–C001747

EXISTING CONDITIONS PLAN

DESIGNED BY: JAY
DRAWN BY: JAY
CHECKED BY: RPD
JOB NO.
2013-55

SHEET NO.
C1.0

SECTION 26, TOWNSHIP 26 SOUTH, RANGE 19 EAST
PASCO COUNTY, FLORIDA

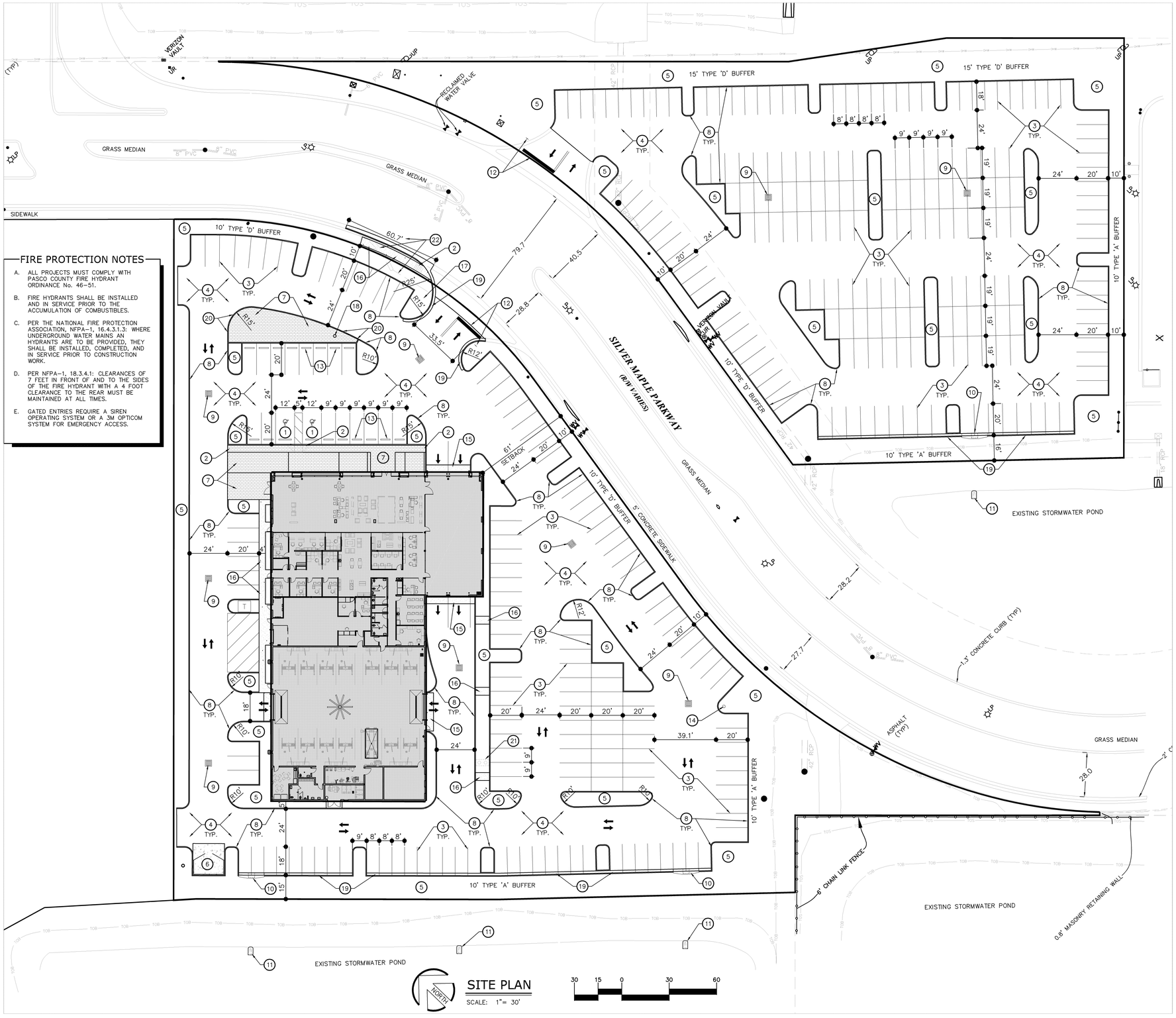

SITE PLAN
SCALE: 1"= 30'

FIRE PROTECTION NOTES

A. ALL PROJECTS MUST COMPLY WITH PASCO COUNTY FIRE HYDRANT ORDINANCE No. 46-51.

B. FIRE HYDRANTS SHALL BE INSTALLED AND IN SERVICE PRIOR TO THE ACCUMULATION OF COMBUSTIBLES.

C. PER THE NATIONAL FIRE PROTECTION ASSOCIATION, NFPA-1, 16.4.3.1.3: WHERE UNDERGROUND WATER MAINS AN HYDRANTS ARE TO BE PROVIDED, THEY SHALL BE INSTALLED, COMPLETED, AND IN SERVICE PRIOR TO CONSTRUCTION WORK.

D. PER NFPA-1, 18.3.4.1: CLEARANCES OF 7 FEET IN FRONT OF AND TO THE SIDES OF THE FIRE HYDRANT WITH A 4 FOOT CLEARANCE TO THE REAR MUST BE MAINTAINED AT ALL TIMES.

E. GATED ENTRIES REQUIRE A SIREN OPERATING SYSTEM OR A 3M OPTICOM SYSTEM FOR EMERGENCY ACCESS.

PROJECT DATA

PROJECT NAME: VOLKSWAGEN OF WESLEY CHAPEL

OWNER:
DEVELOPER: FINK ACQUISITIONS, LLC
27000 WESLEY CHAPEL BLVD
WESLEY CHAPEL, FLORIDA 33544
PHONE: (727) 569-0999 EXT.4190

ENGINEER:
ARCHITECT: SPRING ENGINEERING, INC.
3014 US HIGHWAY 19
HOLIDAY, FLORIDA 34691
PHONE: (727) 938-1516
FAX: (727) 942-4174

SURVEYOR: DAVRIS SURVEYING & MAPPING, INC.
5830 NEBRASKA AVE.
NEW PORT RICHEY, FLORIDA 34652
PHONE: (727) 232-3800

SITE DATA

PARCEL I.D. #: 26-26-19-0000-00100-017B - 4.56 AC
26-26-19-0000-00100-0181 - 1.925 AC

EXISTING PROPERTY USE: VACANT LAND
PROPOSED PROPERTY USE: AUTO DEALERSHIP

ZONING / LAND USE:		FUTURE USE:
SITE:	MPUD / COMMERCIAL	MIXED USE
NORTHWEST:	MPUD / ROADWAY	MIXED USE
NORTHEAST	MPUD / COMMERCIAL	MIXED USE
SOUTHWEST:	MPUD / ROADWAY	MIXED USE
SOUTHEAST:	MPUD / RESIDENTIAL	MIXED USE

RZ5787 (BCC APPROVED 8/20/2002)

FLOOD ZONE: THIS PROJECT IS LOCATED IN FLOOD ZONE 'AE' (ELEVATION 53') AND 'X' ACCORDING TO F.I.R.M. NUMBER 120230 0410 E, AND 120230 0425 E, PREPARED BY THE FEDERAL EMERGENCY MANAGEMENT AGENCY, LAST REVISED SEPTEMBER 30, 1992.

BUILDING SETBACKS:
FRONT: 25'
SIDE: 0'
REAR: N/A

BUFFERS: 10' TYPE 'D' - SILVER MAPLE PKWY
NORTH: 15' TYPE 'D' - SR 56
SOUTH: 10' TYPE 'A'
WEST: 10' TYPE 'A'
EAST: 10' TYPE 'A'

BUILDING AREA: PARCEL 17B - 22,755 SF
FLOOR AREA RATIO: 0.52 AC / 4.56 AC = 0.114
BUILDING HEIGHT: 28' SINGLE STORY - 60' MAX. ALOWED

SITE AREAS: (17B = 4.56 AC + 18W = 1.925 AC = 6.485 AC)
PROJECT AREA: (17B 3.05 AC + 18W 1.925 AC = 4.975 AC)

	PARCEL 17B		PARCEL 18W	
- BUILDING	0.522 AC	17.1 %	0.000 AC	00.0 %
- PAVEMENT	1.843 AC	60.4 %	1.363 AC	70.8 %
- LANDSCAPING	0.685 AC	22.5 %	0.562 AC	29.2 %
- IMPERVIOUS AREA	2.365 AC	77.5 %	1.363 AC	70.8 %
- PERVIOUS AREA	0.685 AC	22.5 %	0.562 AC	29.2 %

REQUIRED PARKING: 1 SPACE PER 400 SF + 4 SPACES PER BAY
10,545 SF/400 = (26)+(14 BAYS x 4) = (82)
82 REQUIRED

PROVIDED PARKING:	PARCEL 17B	PARCEL 18W
HANDICAP SPACES (12x20) =	2 SPACES	0 SPACES
STANDARD SPACES (9x20) =	120 SPACES	158 SPACES
COMPACT SPACES (8x18) =	35 SPACES	38 SPACES
TOTAL PARKING PROVIDED =	**157 SPACES**	**196 SPACES**

TOTAL
353 SPACES

UTILITY COMPANIES:
WATER: PASCO COUNTY UTILITIES
IRRIGATION: PASCO COUNTY UTILITIES
SEWER: PASCO COUNTY UTILITIES
ELECTRIC: WITHLACOOCHEE RIVER ELECTRIC
TELEPHONE: ATT/DISTRIBUTION
FIRE PROTECTION: PASCO COUNTY FIRE DEPARTMENT

KEY NOTES

1. HANDICAP SPACE WITH H.C. PARKING SIGN PER DETAIL ON SHEET C2.1.
2. HDCP RAMP W/ 12:1 SLOPE MAX PER DETAIL ON SHEET C2.1.
3. 4" WHITE PAINTED PARKING STRIPES, TYPICAL.
4. ASPHALT PAVEMENT PER DETAIL ON SHEET C3.0.
5. PROPOSED LANDSCAPE AREA, SEE SHEET C5.0.
6. DUMPSTER PAD AND ENCLOSURE PER DETAIL ON SHEET C2.1.
7. DECORATIVE CONCRETE DISPLAY AREA, SEE ARCHITECTURAL PLANS.
8. TYPE 'D' CONCRETE CURB PER DETAIL ON SHEET C2.1.
9. CONCRETE CATCH BASIN PER DETAIL ON SHEET C2.1.
10. CONCRETE CURB INLET PER DETAIL ON SHEET C2.1.
11. MITERED END SECTION PER DETAIL ON SHEET C2.1.
12. 24" STOP BAR AND STOP SIGN.
13. CONCRETE WHEEL STOPS PER DETAIL ON SHEET C2.1.
14. FIRE DEPARTMENT CONNECTION PER DETAIL ON SHEET C4.0.
15. CONCRETE APRON, SEE STRUCTURAL PLANS.
16. CONCRETE SIDEWALK PER DETAIL ON SHEET C2.1.
17. LOCATION OF SITE PYLON SIGN, PERMITTED SEPARATELY.
18. NEW FLAG POLE.
19. TYPE 'F' CONCRETE CURB AND GUTTER PER DETAIL ON SHEET C2.1.
20. TYPE 'B' CONCRETE CURB PER DETAIL ON SHEET C2.1.
21. NEW SAND/OIL SEPARATOR, SEE UTILITY PLANS.
22. DEMO EXISTING DRIVEWAY AND INSTALL NEW TO MATCH EXISTING.

THIS DRAWING AND THE DESIGN SHOWN ARE THE PROPERTY OF SPRING ENGINEERING, INC. AND ARE NOT TO BE REPRODUCED, COPIED, PUBLISHED, OR USED IN WHOLE OR PART WITHOUT WRITTEN CONSENT. THEY ARE TO BE USED ONLY FOR THE SITE AND PROJECT IDENTIFIED AND SHALL BE RETURNED UPON REQUEST.

100%
CONSTRUCTION DOCS.
ISSUE DATE: 08.17.15

REVISIONS

REV	DATE	DESCRIPTION

ROLAND P. DOVE, P.E.
P.E. NO. 36933
DATE

Volkswagen
Of Wesley Chapel
SR 56 And Silver Maple Pkwy
Wesley Chapel, Florida

CONTRACT DATE:
March 10, 2014

SPRING ENGINEERING, INC.
ENGINEERING • LAND PLANNING • ARCHITECTURE
3014 U.S. HWY 19, HOLIDAY, FL (727) 938-1516
FL COA NO. 00005158 & LICENSE NO. AA-C001747

SITE PLAN

DESIGNED BY: JAY
DRAWN BY: JAY
CHECKED BY: RPD
JOB NO.
2013-55

SHEET NO.
C2.0

STANDARD NOTES

A.) THE SOIL EROSION AND SEDIMENT CONTROL DEVISES SHALL BE INSTALLED PRIOR TO CONSTRUCTION, MAINTAINED THROUGHOUT CONSTRUCTION AND UNTIL THE SITE IS PERMANENTLY STABILIZED.

B.) DURING CONSTRUCTION IF SOMETHING IS UNCOVERED, PARTICULARLY OF AN ARCHEOLOGICAL NATURE, THAT ALL WORK SHALL STOP AND THAT THE STATE ARCHEOLOGICAL OFFICE AND COUNTY ARE NOTIFIED.

C.) PRIOR TO CONSTRUCTION, A BUILDING PERMIT SHALL BE OBTAINED FOR ALL STRUCTURES THAT HAVE A FOOTER, REGARDLESS OF SIZE, THROUGH PASCO COUNTY CENTRAL PERMITTING. (IE: INCLUDING BUT NOT INCLUSIVE BUILDINGS, ACCESSORIES, AND RETAINING WALLS).

D.) IT IS THE OWNER'S RESPONSIBILITY (OR "RESPONSIBLE ENTITY") IS TO INSPECT AND MAINTAIN THE WATER RETENTION SYSTEM ON A REGULAR BASIS.

E.) ALL SODDED SLOPES OVER 4 TO 1, SHALL BE INSTALLED WITH SOD PEGS.

F.) ALL DEMOLITION DEBRIS SHALL BE REMOVED FROM THE SITE AND LEGALLY DISPOSED OF.

G.) IF DURING CONSTRUCTION ACTIVITIES ANY EVIDENCE OF HISTORIC RESOURCES, INCLUDING BUT NOT LIMITED TO ABORIGINAL OR HISTORIC POTTERY, PREHISTORIC STONE TOOLS, BONE OR SHELL TOOLS, HISTORIC TRASH PITS, OR HISTORIC BUILDING FOUNDATION, ARE DISCOVERED, WORK SHALL COME TO AN IMMEDIATE STOP AND THE FLORIDA DEPARTMENT OF HISTORIC RESOURCES (STATE HISTORIC PRESERVATION OFFICER) AND PASCO COUNTY SHALL BE NOTIFIED WITHIN TWO WORKING DAYS OF THE RESOURCES FOUND ON THE SITE.

H.) THERE WILL BE NO ONSITE BURNING PROPOSED ON THIS PROJECT.

I.) FILL REQUIRED ESTIMATED TO BE 12,000 ± C.Y.; NOT TO BE USED FOR BID PURPOSES.

J.) TEST DRIVES MAY NOT BE CONDUCTED ON RESIDENTIAL STREETS.

K.) NO EXTERIOR AMPLIFIED SPEAKER SYSTEM WILL BE USED. THIS INCLUDES THE SERVICE AREA WHERE DOORS TO THE OUTSIDE MAY BE OPEN.

L.) ALL PROJECTS MUST COMPLY WITH PASCO COUNTY FIRE HYDRANT ORDINANCE No. 46-51.

M.) FIRE HYDRANTS SHALL BE INSTALLED AND IN SERVICE PRIOR TO THE ACCUMULATION OF COMBUSTIBLES.

N.) PER THE NATIONAL FIRE PROTECTION ASSOCIATION, NFPA-1, 16.4.3.1.3: WHERE UNDERGROUND WATER MAINS AN HYDRANTS ARE TO BE PROVIDED, THEY SHALL BE INSTALLED, COMPLETED, AND IN SERVICE PRIOR TO CONSTRUCTION WORK.

O.) PER NFPA-1, 18.3.4.1: CLEARANCES OF 7 ½ FEET IN FRONT OF AND TO THE SIDES OF THE FIRE HYDRANT WITH A 4 FOOT CLEARANCE TO THE REAR MUST BE MAINTAINED AT ALL TIMES.

P.) GATED ENTRIES REQUIRE A SIREN OPERATING SYSTEM OR A 3M OPTICOM SYSTEM FOR EMERGENCY ACCESS.

Q.) FIRE PROTECTION SHALL MEET THE REQUIREMENTS OF THE PASCO COUNTY CODE OF ORDINANCES, CHAPTER 46, FIRE PREVENTION AND PROTECTION, AND PLANS SHALL COMPLY WITH REFERENCED REQUIREMENTS.

R.) IF DURING CONSTRUCTION ACTIVITIES ANY EVIDENCE OF THE PRESENCE OF STATE AND FEDERALLY PROTECTED PLANT AND/OR ANIMAL SPECIES IS DISCOVERED, WORK SHALL COME TO AN IMMEDIATE STOP AND PASCO COUNTY SHALL BE NOTIFIED WITHIN TWO WORKING DAYS OF THE PLANT AND/OR ANIMAL SPECIES FOUND ON THE SITE.

CONCRETE CURB DETAIL

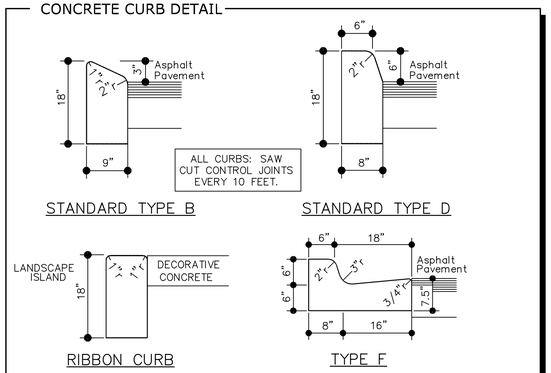

STANDARD TYPE B — STANDARD TYPE D — RIBBON CURB — TYPE F

HANDICAP PARKING DETAIL

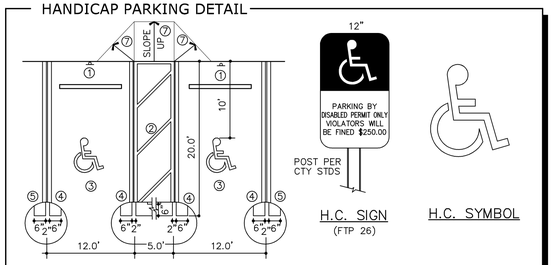

H.C. SIGN (FTP 26) — H.C. SYMBOL

1. BOTTOM OF H.C. SIGN 84" ABOVE GRADE WITH A GALVANIZED METAL POST (ASTM A-499 GRADE 60, ASTM A-123 FINISH). ALL HARDWARE TO BE RUSTPROOF. INSTALL 1' DIA. X 2' DEEP, 3000 PSI CONCRETE FOOTING.
2. 6" WIDE PAINTED STRIPE (WHITE)
3. H.C. SYMBOL: 1 PER SPACE, PAINTED WHITE ON ASPHALT.
4. 6" WIDE PAINTED STRIPE (BLUE)
5. 6" WIDE PAINTED STRIPE (WHITE)
6. ALL BLUE TINTING TO MATCH FEDERAL STANDARD 595e, SHADE 15180.
7. HANDICAP RAMP PER ADA REQUIREMENTS. SLOPE 1:12 AND HAVE A SLIP-RESISTANT SURFACE.

CATCH BASIN DETAIL

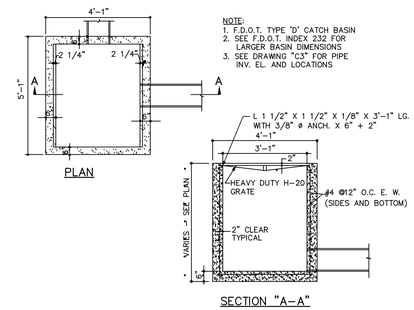

CONCRETE RAMP DETAIL

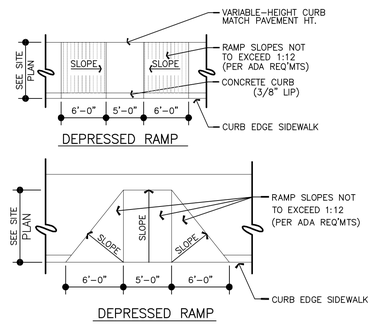

MITERED END SECTION
F.D.O.T. INDEX NO. 272

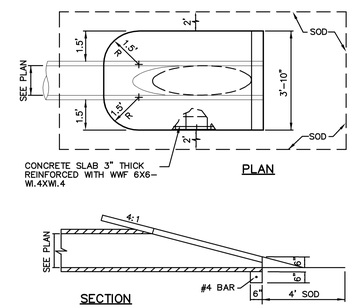

WHEEL STOP DETAIL

1. REQUIRES TWO 5/8" DIA. x 24" LONG STEEL BAR STAKES FOR EACH WHEELSTOP.
2. WHEELSTOP TO BE 3000 PSI CONCRETE AND REINFORCED WITH TWO #3 REBARS.
3. LOCATE WHEELSTOPS 30" FROM EDGE OF PAVEMENT.

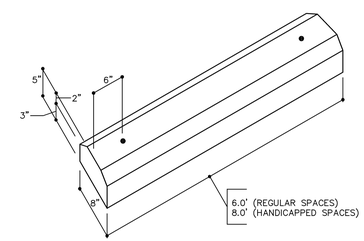

DUMPSTER DETAIL

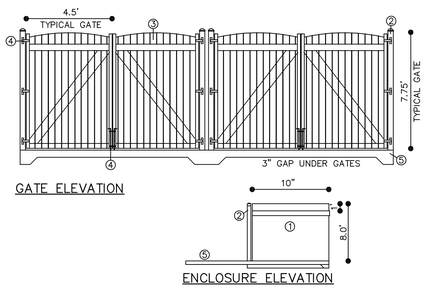

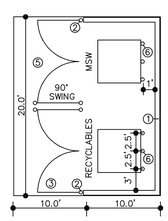

① 8" CMU DUMPSTER ENCLOSURE WITH STUCCO FINISH TEXTURED TO MATCH BUILDING. INSTALL 1x8 DECORATIVE BAND 1' BELOW TOP EDGE OF ENCLOSURE. PAINT TO MATCH BUILDING.

② BOLLARD: 6" DIA. GALV. PIPE COL. 14' LONG FILL W/CONC AND SET IN CONC. FOOTING. PAINT TO MATCH BUILDING.

③ WOOD GATES: 1x6 TREATED BOARDS WITH 1x8 BOARD 1' BELOW TOP EDGE. Z BRACING ON BACK. PAINT TO MATCH BUILDING.

④ 3/4" DIA. x 1.5" DEEP RECESSES FOR GATE CANE BOLTS AT OPEN AND CLOSED POSITION (FIELD VERIFY LOCATION). RICHARS WILCOX HARDWARE: CANE BOLT NO. 524-P23. INDUSTRIAL STRAP HINGE NO. 434-P28 (3 PER GATE). PAINT TO MATCH BUILDING.

⑤ 6" THICK CONCRETE SLAB WITH 6x6 x 1.4x1.4 WWF. PROVIDE A 12" THICKENED SLAB FOOTING (8" WIDE) REINFORCED WITH A #5 BAR BELOW CMU WALLS.

⑥ BOLLARD: 6" DIA. GALV. PIPE COL. 7' LONG FILL W/CONC AND SET IN CONC. FOOTING. PAINT OSHA YELLOW.

SIDEWALK DETAIL

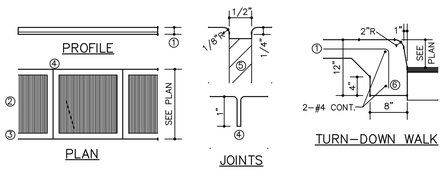

1. CONCRETE SIDEWALK: 4" THICK SLAB ON-SITE AND 6" THICK SLAB OFF-SITE WITH 6x6 #10/10 W.W.M. PLACED 2" ABOVE THE BOTTOM OF THE SLAB.
2. ROUGH BROOM FINISH.
3. 5" WIDE SMOOTH TROWEL FINISH ALONG SIDEWALK EDGE AND JOINTS.
4. CONTRACTION JOINT: 1/8" WIDE x 1" DEEP, SPACED 5' O.C.
5. CONSTRUCTION JOINT: USE PRE-MOLDED FILLER AT BUILDING AND UTILITIES.
6. TURN-DOWN WALK: TERMINATE SIDEWALK ALONG ASPHALT PAVING WITH A THICKENED FOOTING AS SHOWN.

NOT USED

THIS DRAWING AND THE DESIGN SHOWN ARE THE PROPERTY OF SPRING ENGINEERING, INC. AND ARE NOT TO BE REPRODUCED, COPIED, PUBLISHED, OR USED IN WHOLE OR PART WITHOUT WRITTEN CONSENT. THEY ARE TO BE USED ONLY FOR THE SITE AND PROJECT IDENTIFIED AND SHALL BE RETURNED UPON REQUEST.

100%
CONSTRUCTION DOCS.
ISSUE DATE: 08.17.15

REVISIONS		
REV	DATE	DESCRIPTION

ROLAND P. DOVE, P.E.
P.E. NO. 36933
DATE

NOT VALID WITHOUT SIGNATURE AND SEAL OF FLORIDA LICENSED PROFESSIONAL ENGINEER

Volkswagen Of Wesley Chapel
SR 56 And Silver Maple Pkwy
Wesley Chapel, Florida

CONTRACT DATE:
March 10, 2014

SPRING ENGINEERING, INC.
ENGINEERING • LAND PLANNING • ARCHITECTURE
3014 U.S. HWY 19, HOLIDAY, FL (727) 938-1516
FL COA NO. 00005158 & LICENSE NO. AA-C001747

DETAILS AND SECTIONS

DESIGNED BY: JAY
DRAWN BY: JAY
CHECKED BY: RPD
JOB NO. 2013-55
SHEET NO. C2.1

SECTION 26, TOWNSHIP 26 SOUTH, RANGE 19 EAST
PASCO COUNTY, FLORIDA

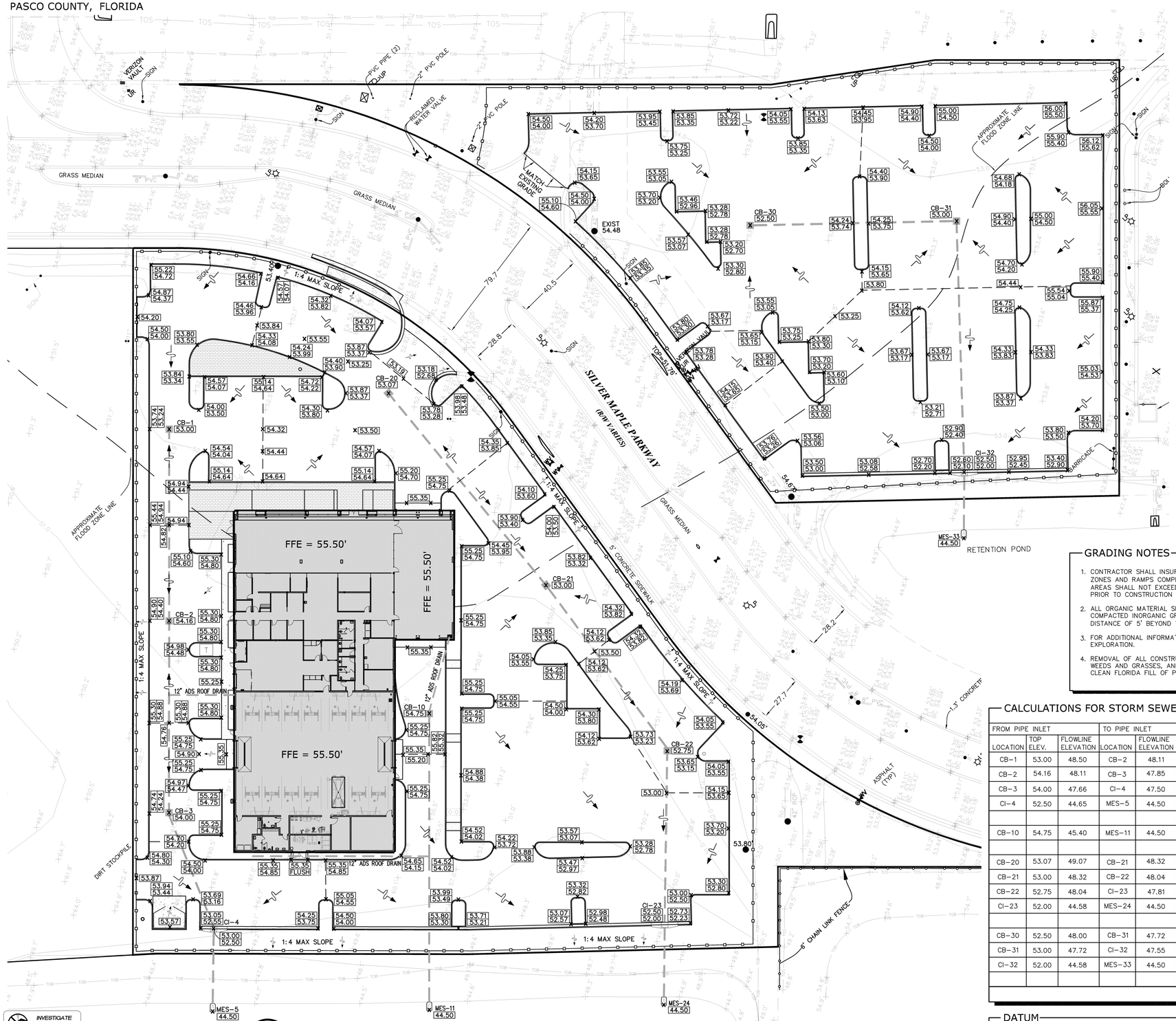

LEGEND

DIRECTION OF FLOW	
PROPOSED ELEVATION @ PAVEMENT	× 55.00
EXISTING ELEVATION	104.63
CATCH BASIN (SEE DETAIL ON SHEET C2.1)	
CURB INLET (SEE DETAIL ON SHEET C2.1)	
MITERED END SECTION (SEE DETAIL ON SHEET C2.1)	
ADS HDPE N-12 STORM PIPE	

ASPHALT PAVING

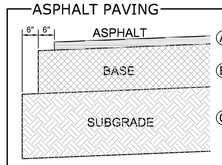

(A) HOT MIX ASPHALT SURFACE COURSE COMPACTED TO MINIMUM 96% OF MARSHALL MAXIMUM LAB UNIT WEIGHT

(B) BASE COURSE COMPACTED TO MINIMUM 98% MAXIMUM MODIFIED PROCTOR DRY DENSITY (ASTM D-1557) & MINIMUM LBR-100

(C) SUBGRADE COMPACTED TO MINIMUM 95% MAXIMUM MODIFIED PROCTOR DRY DENSITY (ASTM D-1557) & MIN. LBR-40

Paving Section Design

Item	Material Description	Structural Coefficient per Inch	DesignThickness / Structural Number: On-Site Parking Stalls	Off-Site and On-Site Drive Lanes
(A)	SP-9.5 Fine Mix	0.44		
	SP-12.5 Fine Mix	0.44	1.5" / 0.66	2" / 0.88
	SP-19.0 Fine Mix	0.44		
(B)	Limerock	0.18	8" / 1.44	8" / 1.44
	Crushed Concrete	0.18		
	Bank Run Shell	0.18		
	Soil Cement (300 psi)	0.15		
(C)	Subgrade - Existing on-site soil stabilized as necessary to achieve min. LBR-40	0.08	12" / 0.96	12" / 0.96
Total SN Provided			3.06	3.28
Minimum SN Required			2.82	3.28

MASTER DRAINAGE NOTE

SWFWMD ERP No. 49021756.000
PARCEL 17A & 17B DRAINS TO POND P-13 WITH APPROVED CN=93.6
PARCEL 18W DRAINS TO POND P-14 WITH APPROVED CN=94.9

POST-DEVELOPMENT
PARCEL 17B CN=91.44
PARCEL 18W CN=89.53

GRADING NOTES

1. CONTRACTOR SHALL INSURE THAT THE CONSTRUCTION OF ALL HANDICAPPED PARKING SPACES, ACCESS AISLES, LOADING ZONES AND RAMPS COMPLY WITH THE ADA AND CABO/ANSI STANDARDS. SLOPES OF HANDICAPPED PARKING AND LOADING AREAS SHALL NOT EXCEED 2%. CONTRACTOR SHALL NOTIFY THE PROJECT ENGINEER (IN WRITING) OF ANY PROBLEM AREAS PRIOR TO CONSTRUCTION OR ASSUME RESPONSIBILITY FOR ALL NECESSARY RELATED CORRECTIONS.
2. ALL ORGANIC MATERIAL SHALL BE REMOVED FROM BENEATH THE FOOTINGS, SLABS AND PAVEMENT AND REPLACED WITH COMPACTED INORGANIC GRANULAR BACKFILL. EXCAVATION OF UNSUITABLE MATERIALS SHOULD EXTEND A MINIMUM DISTANCE OF 5' BEYOND THE FOOTPRINT OF THE BUILDING OR EDGE OF PAVEMENT.
3. FOR ADDITIONAL INFORMATION ON THE REQUIRED SITE PREPARATION REFER TO THE REPORT OF GEOTECHNICAL SUBSURFACE EXPLORATION.
4. REMOVAL OF ALL CONSTRUCTION DEBRIS, LIMEROCK, EXCESS OF BUILDERS SAND, CONCRETE AND MORTAR DEBRIS, EXISTING WEEDS AND GRASSES, AND ALL FOREIGN MATERIALS IN THE PLANTING BED AND SOD AREAS SHALL BE REMOVED AND CLEAN FLORIDA FILL OF PH 5.5-6.6 SHALL BE INSTALLED PRIOR TO ANY INSTALLATION OF PLANTS OR TREES.

CALCULATIONS FOR STORM SEWER DESIGN

FROM PIPE INLET			TO PIPE INLET												
LOCATION	TOP ELEV.	FLOWLINE ELEVATION	LOCATION	FLOWLINE ELEVATION	A ACRES	C	CA ACRES	TOTAL CA	Tc MINS.	I in/hr	Qd CFS	PIPE SIZE n = 0.013	Q full CFS	SLOPE	LENGTH	VELOCITY FT./S.
CB-1	53.00	48.50	CB-2	48.11	0.252	.90	0.227	0.227	10	7.5	1.70	12"ø	2.0	0.34%	114'	2.5
CB-2	54.16	48.11	CB-3	47.85	0.389	.90	0.350	0.577	10	7.5	4.33	18"ø	5.0	0.22%	114'	2.8
CB-3	54.00	47.66	CI-4	47.50	0.088	.90	0.079	0.656	10	7.5	4.92	18"ø	5.0	0.22%	74'	2.8
CI-4	52.50	44.65	MES-5	44.50	0.132	.90	0.119	0.775	10	7.5	5.81	18"ø	6.0	0.30%	50'	3.3
CB-10	54.75	45.40	MES-11	44.50	0.334	.90	0.301	0.301	10	7.5	2.26	12"ø	2.5	0.50%	180'	3.1
CB-20	53.07	49.07	CB-21	48.32	0.320	.90	0.288	0.288	10	7.5	2.16	12"ø	2.5	0.50%	150'	3.1
CB-21	53.00	48.32	CB-22	48.04	0.272	.90	0.245	0.533	10	7.5	4.00	18"ø	5.0	0.22%	123'	2.8
CB-22	52.75	48.04	CI-23	47.81	0.132	.90	0.119	0.652	10	7.5	4.89	18"ø	5.0	0.22%	104'	2.8
CI-23	52.00	44.58	MES-24	44.50	0.586	.90	0.527	1.179	10	7.5	8.84	24"ø	9.0	0.16%	48'	2.8
CB-30	52.50	48.00	CB-31	47.72	0.560	.90	0.504	0.504	10	7.5	3.78	18"ø	5.0	0.22%	124'	2.8
CB-31	53.00	47.72	CI-32	47.55	0.375	.90	0.338	0.842	10	7.5	6.32	24"ø	7.0	0.11%	151'	2.3
CI-32	52.00	44.58	MES-33	44.50	0.507	.90	0.456	1.298	10	7.5	9.74	24"ø	10.0	0.20%	40'	3.1

CALCULATIONS BASED ON A 10-YEAR STORM (I = 7.5)

DATUM

ELEVATIONS WERE ESTABLISHED AT THIS PROJECT THROUGH REDUNDANT GPS (GLOBAL POSITIONING SYSTEM) SURVEY SESSIONS AND ARE REFERENCED TO THE NORTH AMERICAN VERTICAL DATUM OF 1988. (NAVD88)
THE FOLLOWING VERTICAL STATION WAS RECOVERED AND UTILIZED FOR THIS SURVEY:
a) CONTROL BENCHMARK DESIGNATION "E 680" ELEVATION = 56.11' (NAVD88)

THIS DRAWING AND THE DESIGN SHOWN ARE THE PROPERTY OF SPRING ENGINEERING, INC. AND ARE NOT TO BE REPRODUCED, COPIED, PUBLISHED, OR USED IN WHOLE OR PART WITHOUT WRITTEN CONSENT. THEY ARE TO BE USED ONLY FOR THE SITE AND PROJECT IDENTIFIED AND SHALL BE RETURNED UPON REQUEST.

INVESTIGATE BEFORE YOU EXCAVATE
"CALL SUNSHINE STATE ONE"
1-800-432-4770
TOLL FREE
FL STATUTE 556.105 (1979) REQUIRES MIN. OF 2 WORKING DAYS MAX. OF 5 DAYS NOTICE BEFORE YOU EXCAVATE.

NORTH

PAVING, GRADING & DRAINAGE PLAN

SCALE: 1"= 30'

30 15 0 30 60

100%
CONSTRUCTION DOCS.
ISSUE DATE: 08.17.15

REVISIONS		
REV	DATE	DESCRIPTION

ROLAND P. DOVE, P.E.
P.E. NO. 36933
DATE

Volkswagen
Of Wesley Chapel
SR 56 And Silver Maple Pkwy
Wesley Chapel, Florida

CONTRACT DATE:
March 10, 2014

SPRING ENGINEERING, INC.
ENGINEERING • LAND PLANNING • ARCHITECTURE
3014 U.S. HWY 19, HOLIDAY, FL (727) 938-1516
FL COA NO. 00005158 & LICENSE NO. AA-C001747

PAVING, GRADING & DRAINAGE PLAN

DESIGNED BY: JAY
DRAWN BY: JAY
CHECKED BY: RPD
JOB NO.
2013-55

SHEET NO.
C3.0

NPDES SOIL EROSION CONTROL AND POLLUTION PREVENTION NOTES

ALL EROSION CONTROL DEVICES SHALL BE INSTALLED IN ACCORDANCE WITH ALL LOCAL, STATE AND FEDERAL STANDARDS. AN EPA EQUIVALENT NOTICE OF INTENT LETTER SHALL BE POSTED IN THE JOB TRAILER AT ALL TIMES. THIS SITE SHALL BE PROTECTED BY MEANS DESCRIBED IN THE ACCOMPANYING PLANS. IF THERE ARE ANY QUESTIONS REGARDING EROSION CONTROL MEASURES, THE CIVIL ENGINEER OF RECORD MUST BE CONTACTED.

A COPY OF THIS SHEET AND THE EROSION CONTROL PLAN MUST BE KEPT ON-SITE THROUGH THE DURATION OF CONSTRUCTION ACTIVITY. ANY CHANGES MADE TO THIS PLAN MUST BE NOTED, DATED, AND INITIALED BY THE GENERAL CONTRACTOR.

I. GENERAL

THE PROPOSED PLAN INCLUDES THE CONSTRUCTION OF A 22,755 SF AUTOMOBLE SALES AND SERVICE FACILITY ON A VACANT 4.56 AC SITE AND 1.925 AC SITE ACROSS THE STREET W/ ASSOCIATED PARKING AREA, DRIVEWAYS AND STORMWATER AND UTILITY INFRASTRUCTURE.

THE INTENT OF THIS PLAN IS TO CONTROL EROSION AND RESULTING SILT TRANSPORTATION OFF SITE. THE ITEMS INDICATED ARE THE ENGINEERS BEST ESTIMATE OF REQUIREMENTS. MORE CONTROL MAY BE NEEDED DEPENDING ON SITE CONDITIONS, SEASON, ETC. CONTRACTOR SHALL INSTALL ADDITIONAL MEASURES AS NECESSARY TO COMPLY WITH THIS INTENT. ALL CHANGES TO THE STORMWATER POLLUTION PREVENTION PLAN (SWPPP) MUST BE NOTED.

A. BEST MANAGEMENT PRACTICES PLAN WITH ALL SEDIMENT AND EROSION CONTROL PLANS SHALL BE KEPT ON-SITE WITH COPIES OF ALL INSPECTION REPORTS.

B. EXISTING TOPOGRAPHY AND PROPOSED TOPOGRAPHY ARE SHOWN ON THE GRADING PLAN.

C. SEDIMENT AND EROSION CONTROL MEASURES SHALL BE CONSTRUCTED PRIOR TO ANY LAND DISTURBING ACTIVITY TAKING PLACE.

D. OTHER LOCAL, STATE OR FEDERAL STATUTES OR REQUIREMENTS THAT MAY AFFECT THE PERMIT REQUIREMENTS FOR THIS SITE:

1. NPDES CONSTRUCTION STORM WATER MANAGEMENT DISCHARGE CRITERION
2. UNITED STATES ARMY CORPS OF ENGINEERS
3. LOCAL SEDIMENT CONTROL ORDINANCES
4. HAZARDOUS WASTE CONCERNS
5. PROTECTED SPECIES, HISTORICAL PRESERVATION, ETC.

E. MATERIAL NEEDS AFFECTING ENVIRONMENTAL ASPECTS OF THE SITE

1. HAUL-IN/HAUL-OFF
2. TOPSOIL SPOIL OR HAUL-IN

F. PLANNED PHASES OF CONSTRUCTION

1. FLAG ALL WORK LIMITS.
2. CALL THE STATE UTILITY PROTECTION SERVICE TO VERIFY LOCATION OF ANY EXISTING UTILITIES TWO (2) WORKING DAYS PRIOR TO START OF CONSTRUCTION.
3. NOTIFY SEDIMENT CONTROL INSPECTOR TWENTY-FOUR (24) HOURS PRIOR TO START OF CONSTRUCTION.
4. IDENTIFY AND PROTECT ALL EXISTING VEGETATION TO REMAIN.
5. PERFORM CLEARING AND GRADING REQUIRED FOR INSTALLATION OF PERIMETER CONTROLS.
6. INSTALL PERIMETER RUNOFF CONTROLS. NOTIFY SEDIMENT CONTROL INSPECTOR AND OBTAIN APPROVAL BEFORE PROCEEDING FURTHER.
7. INSTALL STORM DRAINAGE PROTECTION.
8. CLEAR AND STABILIZE CONSTRUCTION ACCESS.
9. COMPLETE ALL REQUIRED STOCKPILING, SITE CLEARING AND GRADING.
10. APPLY TEMPORARY OR PERMANENT STABILIZATION MEASURE IMMEDIATELY ON ALL DISTURBED AREAS WHERE WORK MAY BE DELAYED OR IS COMPLETE. DO NOT LEAVE LARGE AREAS UNPROTECTED FOR MORE THAN SEVEN (7) DAYS.
11. CONSTRUCT PARKING LOT BASE, BUILDING FOUNDATION AND INSTALL SITE UTILITIES.
12. WEATHER-IN BUILDING.
13. COMPLETE PARKING LOT CONSTRUCTION.
14. COMPLETE FINAL GRADING, STABILIZATION AND LANDSCAPING.
15. NOTIFY SEDIMENT CONTROL INSPECTOR AND OBTAIN APPROVAL TO REMOVE SEDIMENT AND EROSION CONTROL MEASURES.

II. IMPLEMENTATION

PLANNED CONSTRUCTION PHASING AND SPECIFIC REQUIRED SEDIMENT AND EROSION CONTROL MEASURES.

A. PHASE 1: TOPSOIL STRIPPING AND STOCKPILING – THIS IS THE PHASE AFTER ALL DEBRIS REMOVAL. TOPOSOIL WILL BE STRIPPED AND STOCKPILED ON THE SITE. THE FOLLOWING REQUIREMENTS WILL APPLY DURING THIS PHASE OF CONSTRUCTION.I

1. CONSTRUCTION OF AN FDOT SOIL TRACKING PREVENTION DEVICE TYPE A INDEX 106 SHALL BE COMPLETED TO PREVENT SILT FROM BEING DEPOSITED ON ROADWAYS.
2. SILT FENCES AND/OR DIVERSIONS DIRECTING RUNOFF TO TEMPORARY SEDIMENT BASINS SHALL BE PLACED ON THE DOWNHILL SIDE OF WHEREVER DIRT HAS BEEN DISTURBED BY GRADING TO PREVENT SILT FROM LEAVING THE SITE. SPECIFIC ATTENTION SHOULD BE PAID TO CULVERTS AND CONSTRUCTION ENTRANCES.
3. ALL DEBRIS SHALL BE KEPT AWAY FROM DITCHES AND STREAMS TO PREVENT RUNOFF ACCUMULATION WILL NOT CARRY DEBRIS DOWNSTREAM.
4. SILT FENCES OR DOUBLE SILT FENCES SHALL BE INSTALLED ALONG THE LOW SIDE OF THE SITE WHERE RUN-OFF FROM THE WORK AREA WILL LEAVE THE SITE OR ENTER A DITCH.
5. SILT TRAPS AND SEDIMENT BASINS SHALL BE INSTALLED WHERE/IF SHOWN ON THE PLANS IN ACCORDANCE WITH DETAILS SHOWN TO CATCH AND FILTER RUN-OFF PRIOR TO DISCHARGE FROM THE SITE.
6. ADDITIONAL SILT FENCING AROUND THE STOCKPILE AREA SHOULD BE INSTALLED TO PREVENT SILT WASH OFF FROM THE SITE.

B. PHASE 2: GRADING OPERATIONS – THIS PHASE IS THAT TIME WHEN EARTH IS BEING MOVED FROM ONE PORTION OF THE SITE TO ANOTHER OR IS BEING HAULED INTO OR HAULED OFF FROM THE SITE. THIS IS A CRITICAL TIME WHEN SEDIMENT AND EROSION CONTROL FACILITIES MUST BE CONTINUALLY CHECKED TO ENSURE EFFECTIVENESS. MEASURES SHOULD BE CHANGED OUT AS OFTEN AS REQUIRED TO MEET DEMANDS OF CURRENT SITE CONDITIONS. THE FOLLOWING WILL APPLY TO THIS STAGE OF CONSTRUCTION.

1. ALL SEDIMENT CONTROL FACILITIES REQUIRED AND INSTALLED DURING PHASE 1 SHALL BE LEFT IN PLACE AND MAINTAINED AS APPROPRIATE.
2. WHENEVER A SILT CONTROL FACILITY IS REMOVED BECAUSE OF CHANGING SITE CONDITIONS IT SHALL BE IMMEDIATELY REPLACED WITH ANOTHER MEASURE OF EQUAL OR GREATER EFFECTIVENESS THAT WILL CONTRIBUTE TO THE PROGRAM OF SILT AND EROSION CONTROL.
3. CUT SLOPES SHALL BE PROTECTED BY CONSTRUCTING SWALES AT THE TOP OF CUT SLOPES TO INTERCEPT RUN-OFF. SWALES WILL BE CONSTRUCTED WITH RIP-RAP CHECK DAMS OR SILT FENCES AS NECESSARY TO PREVENT EROSION AND SILTATION.
4. FILL SLOPES SHALL BE PROTECTED BY THE CONSTRUCTION OF BERMS AT THE TOP OF ALL FILL SLOPES TO PREVENT UNCONTROLLED RUN-OFF DRAINING DOWN FACE OF SLOPES.
5. WHEN SHOWN ON PLAN, RUN-OFF DIRECTING BERMS FOR UPGRADE RUN-OFF SHALL BE CONSTRUCTED ALONG SLOPE TO DRAINS THAT WILL CARRY RUN-OFF DOWN THE SLOPE. SLOPE DRAINS SHALL HAVE INLET SILT PROTECTION TYPICAL OF OTHER SITE STORM INLET PROTECTION.
6. SILT FENCES SHALL BE IN PLACE AT THE TOE OF ALL FILL SLOPES.
7. TERRACES, BERMS AND SWALES SHALL BE CONSTRUCTED AT INTERMEDIATE LOCATIONS THROUGHOUT THE SITE AS NECESSARY TO CONTROL EROSION AND SEDIMENT TRANSPORT. THESE DIVERSION FACILITIES SHALL BE SUPPLEMENTED AS APPROPRIATE WITH SILT FENCES AND RIP-RAP FILTER BERMS TO FILTER ACCUMULATED SEDIMENT FROM RUN-OFF PRIOR TO DISCHARGE FROM THE SITE.
8. SLOPES (CUT AND FILL) THAT ARE CONSTRUCTED IN THE FINAL CONFIGURATION SHALL BE COVERED WITH FOUR INCHES (4") OF TOPSOIL AND GRASSED AND MULCHED AS SOON AS GRADING IS COMPLETED. THIS GROWING VEGETATION WILL GIVE ADDED PROTECTION TO THE SLOPE.
9. PORTIONS OF THE SITE THAT ARE GRADED TO FINAL GRADE AND ARE NOT TO RECEIVE PAVEMENT OR BUILDINGS SHOULD HAVE FOUR INCHES (4") OF TOPSOIL SPREAD OVER THE SURFACE AND GRASSED AS SOON AS POSSIBLE IN CONSTRUCTION PROCESS. THIS PHASE OF CONSTRUCTION IS CRITICAL IN THE EROSION AND SEDIMENT CONTROL PROCESS.
10. STORM SEWERS SHOULD BE INSTALLED AS SOON AS POSSIBLE IN THE CONSTRUCTION PROCESS AND CONCURRENT TO GRADING OPERATIONS WHENEVER POSSIBLE TO ENSURE A SUCCESSFUL PROGRAM. CONSTRUCTION RUN-OFF SHALL BE DIRECTED TO STORM SEWER SYSTEM AS SOON AS POSSIBLE.

C. PHASE 3: STORM DRAINAGE AND UTILITY INSTALLATION PLAN – THIS PHASE WILL BE COMPLETED AFTER OR CONCURRENT WITH THE GRADING PHASE. THE FOLLOWING WILL APPLY TO THIS PHASE OF CONSTRUCTION.

1. ALL ASPECTS OF THE PREVIOUS PHASES SHALL BE MAINTAINED AS APPLICABLE.
2. STORM SEWERS THAT ARE INSTALLED SHALL BE PUT INTO SERVICE IMMEDIATELY. THE INLETS OF ALL STORM SEWERS SHALL BE PROTECTED WITH SILT TRAPS THAT PREVENT SEDIMENT FROM ENTERING PIPE. THIS PROTECTION CAN BE SILT FENCE OR RIP-RAP FILTER BERMS AS APPLICABLE AND SHOWN ON THE PLANS.
3. RIP-RAP AS SHOWN ON THE PLANS AND AS REQUIRED ON THE SITE WILL BE INSTALLED AT EMERGENCY SPILLWAYS TO PREVENT EROSION DUE TO OUTFLOW WATER VELOCITY. RIP-RAP SHALL BE EXTENDED DOWNSTREAM AS NEEDED TO PREVENT EROSION.
4. ADDITIONAL SILT FENCING SHALL BE INSTALLED AS NECESSARY TO PREVENT EROSION AND SILTATION RESULTING FROM STOCKPILED EXCAVATION MATERIAL FROM UTILITY INSTALLATION OPERATIONS.

D. PHASE 4: FINISH GRADING, CURB AND PAVEMENT INSTALLATION, LANDSCAPING – THIS IS THE WRAP-UP STAGE WHEN ALL TEMPORARY SEDIMENT AND EROSION CONTROL MEASURES WILL BE PHASED OUT. THE FOLLOWING WILL APPLY TO THIS PHASE:

1. ALL FACILITIES WILL BE MAINTAINED, MODIFIED OR REMOVED WHEN APPROPRIATE.
2. SILT TRAPS AROUND DRAINAGE INLETS WILL BE MAINTAINED, MODIFIED AS NECESSARY AND REMOVED WHEN APPROPRIATE.
3. ALL AREAS NOT RECEIVING PAVEMENT OR BUILDINGS SHALL HAVE FOUR INCHES (4") OF TOPSOIL SPREAD OVER THE AREA AND GRASSED, OR HAVE LANDSCAPING, MULCHING AND/OR SOD INSTALLED PER THE PLANS.
4. CONTRACTOR MAY TEMPORARILY COVER SOME AREAS WITH 2½" THICK GRADED AGGREGATE IN LIEU OF GRASSING FOR TEMPORARY EROSION CONTROL.

E. LANDSCAPING / SEEDING

REFER TO LANDSCAPING PLAN FOR ACTUAL REQUIREMENTS FOR THE INSTALLATION OF LIME, FERTILIZER, SEED AN MULCH. GRASSING OPERATIONS SHALL BE COMPLETED THROUGHOUT CONSTRUCTION PROCESS AT THOSE TIMES WHEN PORTIONS OF THE SITE ARE FINISHED AND READY FOR PERMANENT GROUND COVER. THIS WILL REQUIRE MULTIPLE EFFORTS BY THE GRASSING SUBCONTRACTOR TO STABILIZE ALL IMPACTED AREAS OF THE SITE IN AN ORDERLY FASHION. NO AREA OF THE SITE THAT RECEIVES FINAL GRADE SHALL BE LEFT FOR MORE THAN SEVEN (7) DAYS WITHOUT THE APPLICATION OF SEED AND MULCH.

F. INSPECTION AND MAINTENANCE INSTRUCTIONS:
THE FOLLOWING WILL APPLY TO MAINTAINING EROSION AND SEDIMENT CONTROL FACILITIES:

1. ALL EROSION AND SEDIMENT CONTROL FACILITIES SHALL BE INSPECTED REGULARLY TO ENSURE THEY ARE EFFECTIVE IN THE EVENT OF RAINFALL. MEASURES SHALL BE INSPECTED ONCE A WEEK (MINIMUM) AND WITHIN TWENTY-FOUR (24) HOURS AFTER EACH RAINFALL EVENT THAT IS 0.5" INCHES OR GREATER. ANY DAMAGED OR NONFUNCTIONAL FACILITY SHALL BE REPAIRED OR REPLACED IMMEDIATELY. INSPECTION REPORTS SHALL BE KEPT ON FILE IN THE CONSTRUCTION TRAILER. REQUEST A COPY OF AN ACCEPTABLE INSPECTION FORM FROM THE ENGINEER OF RECORD.
2. SEDIMENT TRAPS SHALL BE CHECKED REGULARLY FOR SEDIMENT CLEANOUT. SEDIMENT SHALL BE REMOVED AND THE TRAP RESTORED TO ITS ORIGINAL DIMENSIONS WHEN THE SEDIMENT HAS ACCUMULATED TO ONE-HALF OF THE DESIGN VOLUME OF THE WET STORAGE. SEDIMENT REMOVED FROM THE TRAP SHALL BE DEPOSITED IN SUITABLE AREAS AND IN SUCH A MANNER THAT IT WILL NOT ERODE AND CAUSE CONTINUED SEDIMENTATION PROBLEMS.
3. GRAVEL OUTLETS AND CHECK DAMS SHALL BE INSPECTED REGULARLY FOR SEDIMENT BUILDUP WHICH WILL PREVENT DRAINAGE. IF THE GRAVEL IS OBSTRUCTED BY SEDIMENT. IT SHALL BE REMOVED AND CLEANED OR REPLACED.
4. SILT FENCE BARRIERS SHALL BE CHECKED REGULARLY FOR UNDERMINING OR DETERIORATION OF THE FABRIC. SEDIMENT SHALL BE REMOVED WHEN THE LEVEL OF DEPOSIT REACHES ONE-THIRD THE HEIGHT OF THE BARRIER.
5. SEEDED AREAS SHALL BE CHECKED REGULARLY TO ENSURE A GOOD STAND IS MAINTAINED. AREAS SHOULD BE FERTILIZED AND RE-SEEDED AS NECESSARY.
6. IF ANY FACILITY IS DAMAGED DURING MAINTENANCE OR OTHERWISE, THE DAMAGED PORTION SHALL BE REMOVED AND REPLACED ACCORDING TO THE ASSOCIATED DETAIL.
7. IF SILT HAS OBSTRUCTED THE SEDIMENT CONTROL FACILITY TO THE POINT OF ELIMINATING ALL FILTERING EFFECTIVENESS, THE STRUCTURE SHALL BE REMOVED AND REPLACED WITH A NEW STRUCTURE IN ACCORDANCE WITH THE ASSOCIATED DETAIL.
8. CONSTRUCTION STAGING AREA SHALL HAVE ADDITIONAL STONE ADDED AS MUD COVERS STONE. UNDER WET SOIL CONDITIONS, TIRES SHALL BE WASHED PRIOR TO ENTERING A PAVED ROADWAY.
9. QUALIFIED PERSONNEL WILL INSPECT ALL POINTS OF DISCHARGES, ALL DISTURBED AREAS OF CONSTRUCTION THAT HAVE NOT BEEN STABILIZED, CONSTRUCTED AREAS AND LOCATIONS WHERE VEHICLES ENTER AND EXIT THE SITE AT LEAST ONCE EVERY 7 CALENDAR DAYS OR WITHIN 24 HOURS OF THE END OF A RAINFALL EVENT THAT IS 0.5 INCHES OR GREATER. WHERE SITES HAVE BEEN FINALLY STABILIZED, SAID INSPECTIONS SHALL BE CONDUCTED AT LEAST ONCE EVERY MONTH UNTIL THE NOTICE OF TERMINATION IS FILED.

G. MAINTAINING EFFECTIVENESS:

CONTRACTOR SHALL INSPECT OVERALL PERFORMANCE OF EROSION AND SEDIMENT CONTROL FACILITIES AND AREAS DOWNSTREAM. IF SILT IS APPARENT DOWNSTREAM FROM STRUCTURES, SOME FAILURE HAS OCCURRED. IF SEDIMENT IS OBSERVED DOWNSTREAM, NOTIFY THE CIVIL ENGINEER. THE CIVIL ENGINEER WILL INSPECT THE CONDITION AND AFTER INSPECTION, DIRECT THE REMOVAL OF ACCUMULATED SEDIMENT DOWNSTREAM AND ADD ADDITIONAL STRUCTURAL MEASURES AS NECESSARY. CONTRACTOR SHALL IMPLEMENT RECOMMENDED SOLUTIONS TO PROBLEM AREAS AS RECOMMENDED.

III. COMPLETION

A. PROJECT CLOSE OUT:
THE FOLLOWING SHALL BE DONE AT THE END OF THE PROJECT.

1. INSPECT SITE TO ENSURE THAT GROUND COVER IS COMPLETE AND ADEQUATE. ALL AREAS SHOULD BE EITHER PAVED OR HAVE SUFFICIENT GROUND COVER (MINIMUM 80% VEGETATIVE COVER) WITH NO APPARENT EROSION.
2. WHEN GROUND COVER INSPECTION IS MADE AND APPROVED, ALL STRUCTURAL EROSION CONTROL FACILITIES MY BE REMOVED ALONG WITH ANY ACCUMULATED SILT AND DEBRIS. AREAS DISTURBED BY STRUCTURE REMOVAL SHALL BE FINE GRADED, GRASSED, AND MULCHED AS REQUIRED.
3. IF GROUND COVER INSPECTION IS MADE AND PROBLEMS DISCOVERED, PERFORM APPROPRIATE REPAIR MEASURES AND RE-INSPECT PRIOR TO STRUCTURE REMOVAL.
4. ALL CONSTRUCTED AND EXISTING STORM SEWERS SHALL BE INSPECTED UPON REMOVAL OF INLET PROTECTION. STRUCTURES CONTAINING SEDIMENT AND/OR CONSTRUCTION DEBRIS SHALL BE VACUUM CLEANED PRIOR TO FILING NOTICE OF TERMINATION WITH ENVIRONMENTAL PROTECTION AGENCY.

B. MISCELLANEOUS ISSUES

1. NO FUEL OR OIL SHALL BE STORED ON SITE WITHOUT PROPER CONTAINMENT.
2. NO OILS OR GAS SHALL BE DUMPED ON SITE.
3. LOCATION OF TRAILER AND PORTABLE RESTROOM FACILITY SHALL BE FIELD DETERMINED TO AVOID CONSTRUCTION ACTIVITIES. LOCATION SHALL CHANGE DURING CONSTRUCTION AS NECESSARY.
4. DE-WATERING OPERATIONS ARE NOT REQUIRED ON THIS PROJECT. IF REQUIRED, PUMPED GROUND WATER SHALL BE ROUTED THROUGH SILT CONTROL FACILITY TO FILTER WATER PRIOR TO DISCHARGE.
5. PROJECT SITE SHALL BE KEPT AS CLEAR OF ALL TRASH AND CONSTRUCTION DEBRIS. CONTRACTOR SHALL HAVE TRASH COLLECTED WEEKLY AND PLACED IN DUMPSTER TO BE HAULED OFF-SITE.
6. ALL WATER SUPPLY WILL BE PROVIDED FROM PUBLIC WATER SUPPLY.
7. ALL HUMAN WASTE SHALL BE COLLECTED IN A PORTABLE RESTROOM FACILITY. WASTES SHALL BE DISPOSED OF BY A LICENSED VENDOR.
8. ANY SPILLED OIL, GAS, ETC. RESULTING FROM CONSTRUCTION ACTIVITIES SHALL BE CONTAINED AND CLEANED IMMEDIATELY. CONTAMINATED SOILS SHALL BE DISPOSED OF IN AN APPROVED MANNER AT A LICENSED LANDFILL.
9. DUST SUPPRESSION OPERATIONS SHALL BE PERFORMED BY MEANS OF A WATER TRUCK DISTRIBUTING A FINE MIST OF WATER ON THE SITE SURFACE. CONCENTRATE STREAMS OF WATER SPRAY SHOULD BE AVOIDED.
10. A DESIGNATED CONCRETE SPOILS AREA SHALL BE IDENTIFIED ON THE SITE. ALL AFFECTED SOILS AND CONCRETE SPOILS IN THIS AREA SHALL BE REMOVED FROM THE SITE UPON COMPLETION OF CONCRETE PLACEMENT ACTIVITIES.
11. ANY NON-STORM DISCHARGES SUCH AS, BUT NOT LIMITED TO , FIRE HYDRANT FLUSHINGS, WASH WATERS, DUST CONTROL, IRRIGATION DRAINAGE, ETC. THAT DO NOT CONTAIN HAZARDOUS MATERIALS SHALL BE PREVENTED FROM ALLOWING SEDIMENT TRANSPORT INTO STORM SEWERS. FLUSHINGS THAT CONTAIN HAZARDOUS MATERIALS SHALL BE PREVENTED FROM ENTERING THE STORM SEWERS AND SHALL BE COLLECTED AND DISPOSED OF IN AN APPROVED MANNER.

B. MISCELLANEOUS ISSUES (CONT.)

12. ALL EROSION CONTROL MEASURES (SILT BARRIERS) MUST BE INSTALLED PRIOR TO THE START OF CONSTRUCTION AND REMAIN IN PLACE THROUGHOUT CONSTRUCTION. ENCROACHMENT OR FAILURE TO MAINTAIN THESE BARRICADES COULD RESULT IN ENFORCEMENT ACTION WHICH MAY INCLUDE CITATIONS AND/OR PERMIT REVOCATION. SILTATION BARRIERS SHALL BE MAINTAINED AND REPAIRED AT THE END OF EACH WORKING DAY. HAY BALES SHALL BE INSTALLED ONCE PERIMETER GRADING IS COMPLETED. STORMWATER FACILITIES SHALL HAVE HAY BALES PLACED AROUND THEIR ENTRANCES TO PREVENT SEDIMENT FROM BEING TRANSPORTED INTO THE STORMWATER SYSTEM. HAY BALES SHALL BE PLACED ALONG THE PERIMETER OF ALL DOWNSTREAM BOUNDARIES TO PROVIDE FILTRATION OF RUNOFF DURING CONSTRUCTION. THE HAY BALES SHALL REMAIN IN PLACE UNTIL THE ENGINEER HAS APPROVED THE VEGETATIVE COVER ALONG EMBANKMENTS PROVIDING RUNOFF TO THE PERIMETER. IT IS THE CONTRACTOR'S RESPONSIBILITY TO REPAIR THEM. THE CONTRACTOR IS EXPECTED, AT THE END OF EACH DAY, TO HAVE THE SITE GRADED IN SUCH A WAY THAT ADJACENT PROPERTIES ARE NOT ADVERSELY IMPACTED BY EROSION OR SEDIMENT LEAVING THE SITE. CLEARED AREAS SHALL BE STABILIZED EARLY IN THE CONSTRUCTION PROCESS AND IF NATURAL PRECIPITATION DOES NOT PROVIDE PERIODIC WETTING OF THE SITE, THEN THE CONTRACTOR SHALL PROVIDE A METHOD OF SPRAYING THE SITE TO PREVENT WIND EROSION.

CHARACTERISTICS OF THE DISCHARGE POINT:

SOILS DATA: FROM GEOTECHNICAL REPORT – EXISTING SOIL TYPE IS POMONA FINE SAND TYPE B/D WITH AN ESTIMATED SEASONAL HIGH WATER TABLE OF 0-1 FEET BELOW EXISTING GRADE.

DRAINAGE AREA FOR PROPOSED SYSTEM: 4.98 ACRES, THE PARKING LOT AREAS AND DRIVES WILL DRAIN INTO AREA INLETS FROM ASPHALT VEHICULAR AREAS GRADED AT 1-3%±.

LATITUDE AND LONGITUDE OF PROJECT: 28°11'16" N, 82°22'37" W, DISCHARGES INTO THE EXISTING STORMWATER SYSTEM SOUTH OF THE SITE WHICH THEN DISCHARGES INTO AN UNNAMED WETLAND.

CONTROLS FOR OTHER POTENTIAL POLLUTANTS:

ALL CONSTRUCTION MATERIALS AND DEBRIS WILL BE PLACED IN A DUMPSTER AND HAULED OFF SITE TO A LANDFILL OR OTHER DISPOSAL SITE. NO MATERIALS WILL BE BURIED ON SITE.

FERTILIZERS AND PESTICIDES WILL BE USED AT A MINIMUM AND IN ACCORDANCE WITH THE MANUFACTURER'S SUGGESTED APPLICATION RATES.

NON-STORMWATER DISCHARGES:

IT IS EXPECTED THAT THE FOLLOWING NON-STORMWATER DISCHARGES MAY OCCUR FROM THE SITE DURING THE CONSTRUCTION PERIOD: WATER FROM WATER LINE FLUSHING, PAVEMENT WASH WATER (WHERE NO SPILLS OR LEAKS OF TOXIC OR HAZARDOUS MATERIALS HAVE OCCURRED), AND UNCONTAMINATED GROUNDWATER (FROM DEWATERING EXCAVATION). IF SAID DISCHARGES DO OCCUR, THEY WILL BE DIRECTED TO THE RETENTION POND PRIOR TO DISCHARGE. TURBID WATER FROM THE STORMWATER POND SHALL NOT BE PUMPED DIRECTLY INTO THE REGIONAL DITCH. ANY PUMPED WATER FROM THE STORMWATER POND SHALL BE TREATED SO AS TO NOT ALLOW A DISCHARGE OF POLLUTED STORMWATER. TREATMENT CAN INCLUDE SILT FENCES, SETTLING PONDS, THE PROPER USE OF FLOCCULATING AGENTS OR OTHER APPROPRIATE MEANS.

CONTRACTOR/SUBCONTRACTOR CERTIFICATION:

"I CERTIFY UNDER PENALTY OF LAW THAT I UNDERSTAND, AND SHALL COMPLY WITH, THE TERMS AND CONDITIONS OF THE STATE OF FLORIDA GENERIC PERMIT FOR STORMWATER DISCHARGE FROM LARGE AND SMALL CONSTRUCTION ACTIVITIES AND THIS STORMWATER POLLUTION PREVENTION PLAN PREPARED THEREUNDER."

______________________________	______________________________
CONTRACTOR SUPERVISOR, TITLE **CONTRACTOR COMPANY:**	**SCOTT FINK, PRESIDENT** **FINK ACQUISITIONS, LLC**

STANDARD PERMIT CONDITIONS:

"I CERTIFY UNDER PENALTY OF LAW THAT THIS DOCUMENT AND ALL ATTACHMENTS WERE PREPARED UNDER MY DIRECTION OR SUPERVISION IN ACCORDANCE WITH A SYSTEM DESIGNED TO ASSURE THAT QUALIFIED PERSONNEL PROPERLY GATHERED AND EVALUATED THE INFORMATION SUBMITTED. BASED ON MY INQUIRY OF THE PERSON OR PERSONS WHO MANAGE THE SYSTEM, OR THOSE PERSONS DIRECTLY RESPONSIBLE FOR GATHERING THE INFORMATION, THE INFORMATION SUBMITTED IS, TO THE BEST OF MY KNOWLEDGE AND BELIEF, TRUE, ACCURATE, AND COMPLETE. I AM AWARE THAT THERE ARE SIGNIFICANT PENALTIES FOR SUBMITTING FALSE INFORMATION, INCLUDING THE POSSIBILITY OF FINE AND IMPRISONMENT FOR KNOWING VIOLATIONS."

____
ROLAND P. DOVE P.E., DIRECTOR OF ENGINEERING
SPRING ENGINEERING, INC.

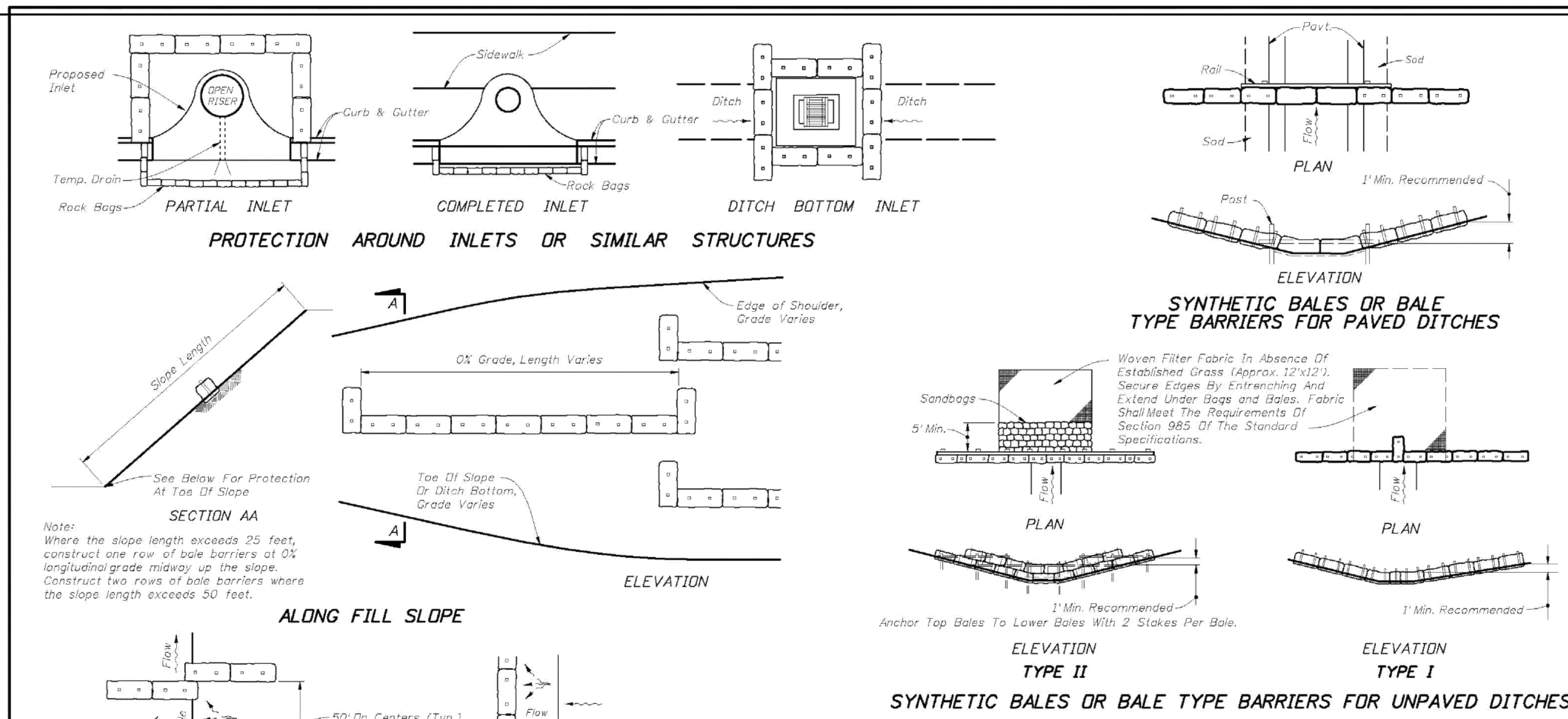

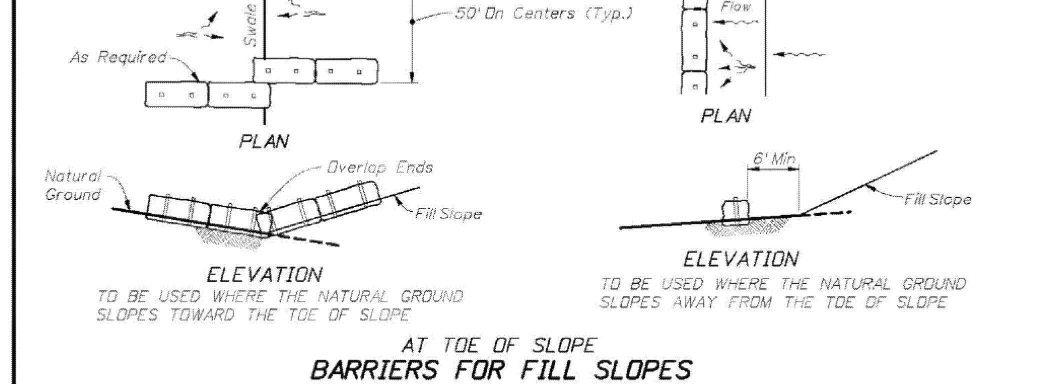

NOTES FOR SYNTHETIC BALES OR BALE TYPE BARRIERS

1. Type I and II Synthetic Barrier should be spaced in accordance with Chart I, Sheet 1.
2. Bales shall be anchored with 2-1" x 2" (or 1" dia.) x 4' wood stakes. Stakes of other material or shape providing equivalent strength may be used if approved by the Engineer. Stakes other than wood shall be removed upon completion of the project.
3. Rails and posts shall be 2" x 4" wood. Other materials providing equivlalent strength may be used if approved by the Engineer.
4. Adjacent bales shall be butted firmly together.
5. Where used in conjunction with silt fence, bales shall be placed on the upstream side of the fence.
6. Bales to be paid for under the contract unit price for Synthetic Bales, LF. The unit price shall include the cost of filter fabric for Type I and II Barriers. Sandbags shall be paid for under the unit price for Sandbagging, CY. Rock bags to be paid for under the contract unit price for Rock Bags, EA.

2010 FDOT Design Standards	Last Revision	Sheet No.
TEMPORARY EROSION AND SEDIMENT CONTROL	07/01/09	2 of 3
	Index No.	102

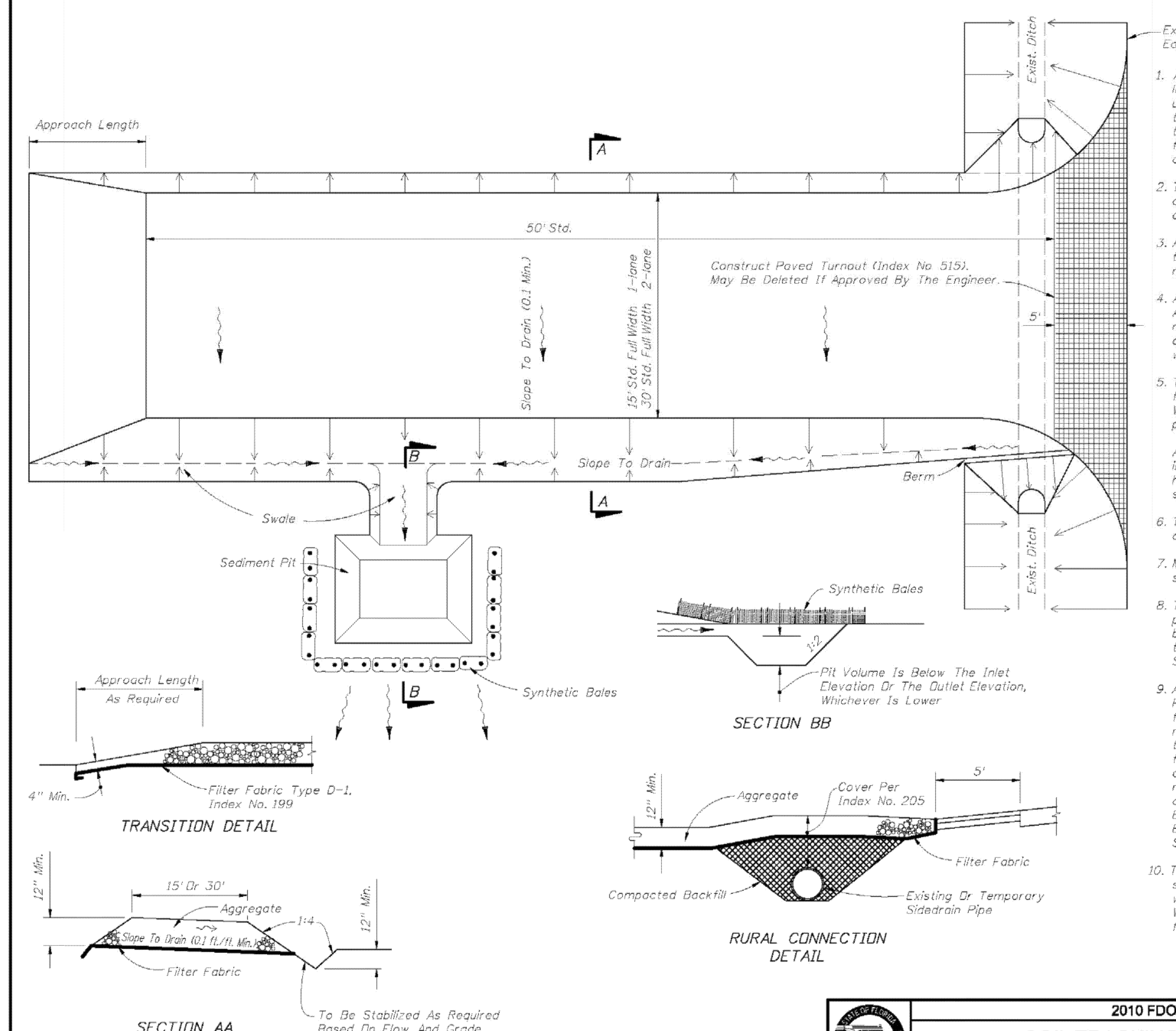

GENERAL NOTES

1. A Soil Tracking Prevention Device (STPD) shall be constructed at locations designated by the engineer for points of egress from unstabilized areas of the project to public roads where off-site tracking of mud could occur. Traffic from unstabilized areas of the construction project shall be directed thru a STPD. Barriers, flagging, or other positive means shall be used as required to limit and direct vehicular egress across the STPD.
2. The Contractor may propose an alternative technique to minimize off-site tracking of sediment. The alternative must be reviewed and approved by the Engineer prior to its use.
3. All materials spilled, dropped, or tracked onto public roads (including the STPD aggregate and construction mud) shall be removed daily, or more frequently if so directed by the Engineer.
4. Aggregates shall be as described in Section 901 excluding 901-2.3. Aggregates shall be FDOT size #1. If this size is not available, the next available smaller size aggregate may be substituted with the approval of the Engineer. Sizes containing excessive small aggregate will track off the project and are unsuitable.
5. The sediment pit should provide a retention volume of 3600 cubic feet/acre of surface area draining to the pit. When the STPD is isolated from other drainage areas, the following pit volumes will satisfy this requirement: $15' \times 50' = 100\ ft.^3$ $30' \times 50' = 200\ ft.^3$ As an option to the sediment pit, the width of the swale bottom can be increased to obtain the volume. When the sediment pit or swale volume has been reduced to one half, it shall be cleaned. When a swale is used, synthetic bales or silt fence shall be placed along the entire length.
6. The swale ditch draining the STPD shall have a 0.02% minimum and a 1.0% maximum grade along the STPD and to the sediment pit.
7. Mitered end sections are not required when the sidedrain pipe satisfies the clear zone requirements.
8. The STPD shall be maintained in a condition that will allow it to perform its function. To prevent off-site tracking, the STPD shall be rinsed (daily when in use) to move accumulated mud downward thru the stone. Additional stabilization of the vehicular route leading to the STPD may be required to limit the mud tracked.
9. A STPD shall be paid for under the contract unit price for Soil Tracking Prevention Device, EA. The unit price shall constitute full compensation for construction, maintenance, replacement of materials, removal, and restoration of the area utilized for the STPD; including but not limited to excavation, grading, temporary pipe (including MES when required), filter fabric, aggregate, paved turnout (including asphalt and base construction), ditch stabilization, approach route stabilization, sediment removal and disposal, water, rinsing and cleaning of the STPD and cleaning of public roads, grassing and sod. Synthetic Bale or Bale Type Barrier shall be paid for under the contract unit price for Synthetic Bales, LF. Silt fence shall be paid for under the contract unit price for Staked Silt Fence, LF.
10. The nominal size of a standard STPD is 15' x 50' unless otherwise shown in the plans. If the volume of entering and existing vehicles warrant, a 30' width STPD may be used if approved by the Engineer. When a double width (30') STPD is used, the pay quantity shall be 2 for each location.

2010 FDOT Design Standards	Last Revision	Sheet No.
SOIL TRACKING PREVENTION DEVICE TYPE A	07/01/07	1 of 1
	Index No.	106

THIS DRAWING AND THE DESIGN SHOWN ARE THE PROPERTY OF SPRING ENGINEERING, INC. AND ARE NOT TO BE REPRODUCED, COPIED, PUBLISHED, OR USED IN WHOLE OR PART WITHOUT WRITTEN CONSENT. THEY ARE TO BE USED ONLY FOR THE SITE AND PROJECT IDENTIFIED AND SHALL BE RETURNED UPON REQUEST.

100%
CONSTRUCTION DOCS.
ISSUE DATE: 08.17.15

REV	DATE	DESCRIPTION

REVISIONS

NOT VALID WITHOUT SIGNATURE AND EMBOSSED SEAL
ROLAND P. DOVE, P.E.
P.E. NO. 36933
DATE

Volkswagen Of Wesley Chapel
SR 56 And Silver Maple Pkwy
Wesley Chapel, Florida

CONTRACT DATE:
March 10, 2014

SPRING ENGINEERING, INC.
ENGINEERING • LAND PLANNING • ARCHITECTURE
3014 U.S. HWY 19, HOLIDAY, FL (727) 938-1516
FL COA NO. 00005158 & LICENSE NO. AIA-C001747

NPDES NOTES & DETAILS

DESIGNED BY: JAY
DRAWN BY: JAY
CHECKED BY: RPD
JOB NO.
2013-55
SHEET NO.
C3.2

SECTION 26, TOWNSHIP 26 SOUTH, RANGE 19 EAST
PASCO COUNTY, FLORIDA

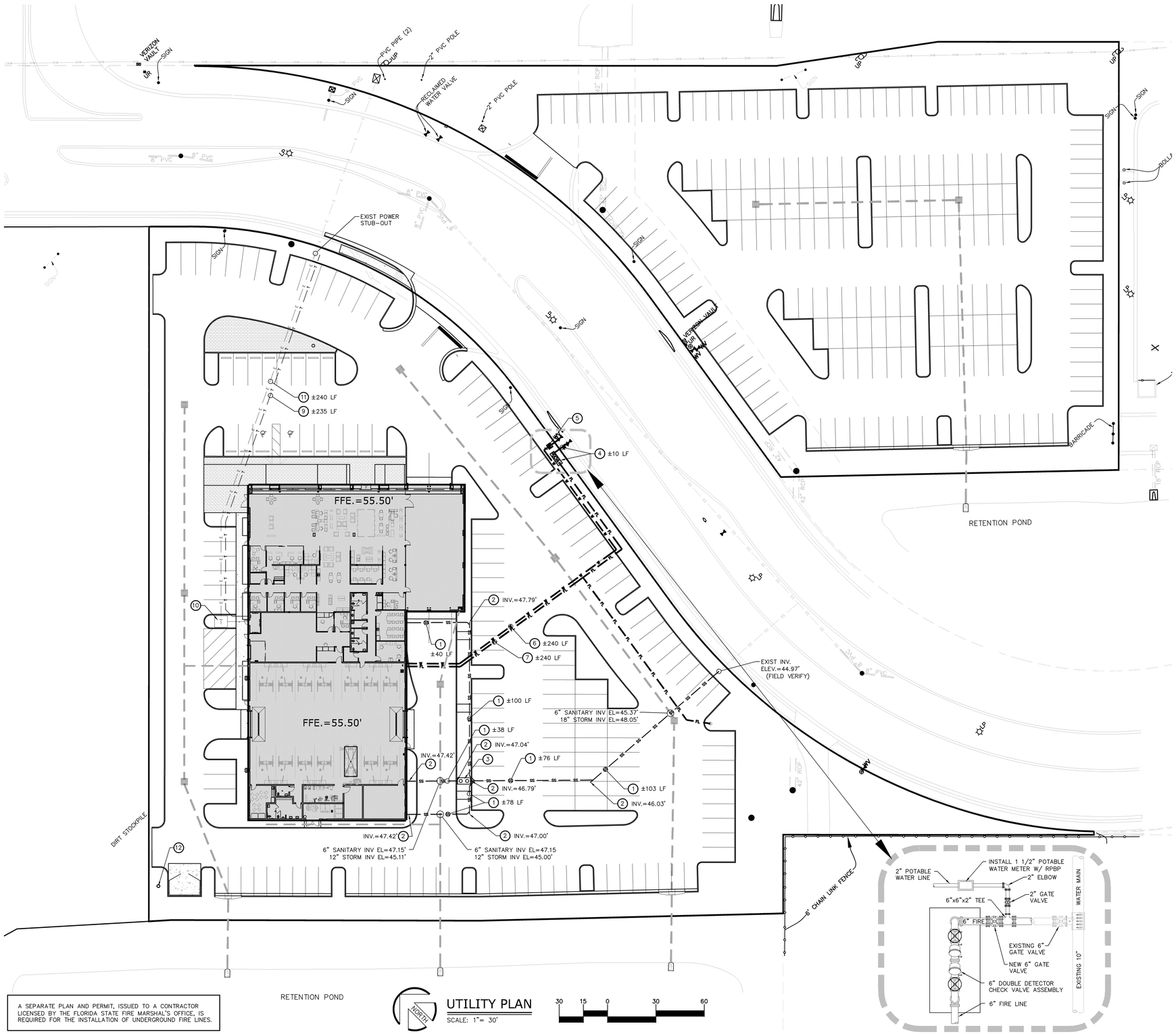

A SEPARATE PLAN AND PERMIT, ISSUED TO A CONTRACTOR LICENSED BY THE FLORIDA STATE FIRE MARSHAL'S OFFICE, IS REQUIRED FOR THE INSTALLATION OF UNDERGROUND FIRE LINES.

NORTH

UTILITY PLAN

SCALE: 1"= 30'

30 15 0 30 60

UTILITY CONTACTS

POTABLE WATER: SEWER:	FLORIDA GOVERNMENTAL UTILITY AUTHORITY 4939 CROSS BAYOU PORT RICHEY, FL 34652 MIKE BUDIN, PE (727) 848-8292
IRRIGATION:	EXISTING PRIVATE WELL
ELECTRICAL:	DUKE ENERGY 452 E. CROWN POINTE ROAD WINTER GARDEN, FL 33787 SHARON DEAR (407) 905-3321
TELEPHONE:	VERIZON FLORIDA INC. 7701 E. TELECOM PARKWAY TEMPLE TERRACE, FL 33637 DAVID WYNNS (813) 978-2164

UTILITY KEY NOTES

1. CONTRACTOR TO INSTALL NEW 6" PVC SANITARY SEWER LINE W/ MIN. SLOPE OF 1%, SEE PLAN FOR LENGTH AND INVERT ELEVATIONS.
2. CONTRACTOR TO INSTALL NEW CLEAN OUT PER DETAIL ON SHEET C4.1.
3. CONTRACTOR TO INSTALL NEW 1000 GALLON OIL/SEDIMENT INTERCEPTOR PER DETAIL ON SHEET C4.1.
4. CONTRACTOR TO COORDINATE W/ WATER COMPANY AND INSTALL NEW 6" WATER LINE WITH DDCVA PER DETAIL ON SHEET C4.1.
5. CONTRACTOR TO COORDINATE W/ WATER COMPANY AND INSTALL NEW 2" WATER METER AND RPBP PER DETAIL ON SHEET C4.1.
6. CONTRACTOR TO INSTALL NEW 2" PVC WATER LINE FROM PROPOSED WATER METER TO PROPOSED BUILDING, COORDINATE LOCATION AND INSTALLATION WITH UTILITY DEPARTMENT, SEE PLAN FOR PIPE LENGTH.
7. CONTRACTOR TO INSTALL NEW 6" C-900 PVC DR-14 FIRE LINE TO BUILDING RISER PER DETAIL ON SHEET C4.1.
8. NEW FIRE DEPARTMENT CONNECTION PER DETAIL ON SHEET C4.1 W/ 4" C-900 PVC DR-14 FIRE LINE TO BUILDING RISER.
9. CONTRACTOR TO COORDINATE WITH THE ELECTRIC COMPANY AND INSTALL (2) NEW 4" ELECTRICAL CONDUIT FOR UNDERGROUND ELECTRICAL SERVICE.
10. CONTRACTOR TO COORDINATE WITH THE ELECTRIC COMPANY AND CONNECT TO PROPOSED PAD MOUNT TRANSFORMER.
11. CONTRACTOR TO COORDINATE WITH THE PHONE COMPANY AND INSTALL (2) NEW 4" ELECTRICAL CONDUITS FOR NEW PHONE SERVICE AND FIRE ALARM SYSTEM.
12. CONTRACTOR TO INSTALL NEW 3" IRRIGATION WELL AND CONNECT TO NEW IRRIGATION SYSTEM, SEE LANDSCAPE AND IRRIGATION PLANS.

FIXTURE COUNT

FIXTURE	FIXTURE VALUE	No. OF FIXTURES	FIXTURE VALUE
DRINKING FOUNTAIN – PUBLIC	2	2	4
KITCHEN SINK – ½" CONNECTION	3	3	9
LAVATORY –½" CONNECTION	4	8	32
SHOWER HEAD – SHOWER ONLY	4	0	0
SERVICE SINK – ½" CONNECTION	3	1	3
URINAL – WALL FLUSH VALVE	10	2	20
WASH SINK	4	0	0
WATER CLOSET – FLUSH VALVE	10	7	70
HOSE REEL –1/2"	6	8	48
HOSE CONNECTION –3/4"	10	9	90
COMBINED FIXTURE VALUE TOTAL			276

TOTAL = 72 GPM MAX = 1 1/2" METER

FIRE HYDRANT W/ MIN. 1000 GPM

IRRIGATION WELL

CONTRACTORS RESPONSIBILITIES

CONTRACTORS RESPONSIBILITIES REGARDING WET TAPS

–2" ONLY–THIS EXCAVATED TRENCH MUST BE DRY OR THE TRENCH WILL REQUIRE ROCK AND A PUMP TO BE IN PLACE. THE MINIMUM DISTANCE FROM THE FACE OF THE VALVE TO THE WALL OF THE TRENCH IS TO BE SIX FEET.

–3" AND LARGER–THE CONTRACTOR WILL SUPPLY A TAPPING SADDLE BEING EPOXY COATED, A TAPING VALVE WITH MECHANICAL JOINT AND THE EQUIPMENT TO PROVIDE, AND CONDUCT A PRESSURE TEST. COUNTY PERSONNEL WILL WITNESS THE PRESSURE TEST WHICH MUST BE AT LEAST 150 PSI FOR DURATION OF THIRTY MINUTES.

–THE CONTRACTOR IS RESPONSIBLE FOR THE EXCAVATION BEFORE ANY COUNTY PERSONNEL WILL ENTER A EXCAVATED AREA. IF THE TRENCH IS FOUR FEET IN DEPTH OR DEEPER, IT WILL REQUIRE A TRENCH BOX OR SLOPING, AND A LADDER ACCORDING TO OCCUPATIONAL SAFETY AND HEALTH ADMINISTRATION (OSHA) STANDARDS.

–THE TAPPING VALVE WILL REQUIRE A BLOCKING DEVICE MADE OF SUITABLE MATERIAL OR DEVICE. THIS BLOCKING DEVICE OR MATERIAL WILL BE PLACED UNDER THE VALVE AND REMAIN IN PLACE UNTIL THE TAP MACHINE IS REMOVED AND THE TAP IS COMPLETED.

–NOTE: IF THE CONTRACTOR HAS NOT FULFILLED HIS RESPONSIBILITIES, AS STATED ABOVE, PRIOR TO THE ARRIVAL OF PASCO COUNTY UTILITIES OPERATIONS AND MAINTENANCE TAPPING CREW, THERE WILL BE AN ADDITIONAL CHARGE OF $95.00.

UTILITY NOTES

PLEASE SEE UTILITY NOTES ON SHEET C4.1.

THIS DRAWING AND THE DESIGN SHOWN ARE THE PROPERTY OF SPRING ENGINEERING, INC. AND ARE NOT TO BE REPRODUCED, COPIED, PUBLISHED, OR USED IN WHOLE OR PART WITHOUT WRITTEN CONSENT. THEY ARE TO BE USED ONLY FOR THE SITE AND PROJECT IDENTIFIED AND SHALL BE RETURNED UPON REQUEST.

100%
CONSTRUCTION DOCS.
ISSUE DATE: 08.17.15

REVISIONS

REV	DATE	DESCRIPTION

ROLAND P. DOVE, P.E.
P.E. NO. 36933
DATE

Volkswagen
Of Wesley Chapel
SR 56 And Silver Maple Pkwy
Wesley Chapel, Florida

SPRING ENGINEERING, INC.
ENGINEERING • LAND PLANNING • ARCHITECTURE
3014 U.S. HWY 19, HOLIDAY, FL (727) 938-1516
FL COA NO. 00005158 & LICENSE NO. AA-C001747

UTILITY PLAN

DESIGNED BY: JAY
DRAWN BY: JAY
CHECKED BY: RPD

CONTRACT DATE: March 10, 2014

JOB NO. 2013-55

SHEET NO. C4.0

UTILITY DETAILS

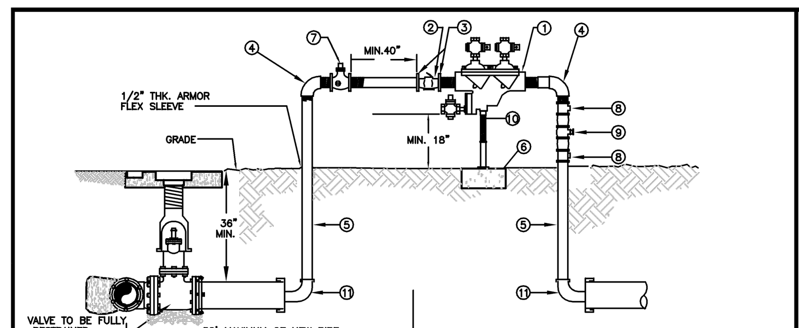

MATERIALS

ITEM	QUANT.	DESCRIPTION
1	1	2" BACKFLOW PREVENTER ASSEMBLY, REDUCED PRESSURE ZONE
2	1	2" METER FURNISHED BY PASCO COUNTY UTILITIES
3	2	BRASS-METER FLANGES OR ADAPTORS
4	2	2" ELBOWS – GALV. 90°
5	2	2" RISER – GALV.
6	*	CONCRETE SLAB
7	1	2" VALVE – BRASS OR S.S.
8	2	TEE/ VALVES – BRASS OR S.S.
9	1	2" GATE VALVE – BRASS OR S.S.
10	1	PIPE STAND (SUPPORT)
11	2	M.J. CAP WITH 2" TAP

NOTE:
- CONTRACTOR/CUSTOMER SHALL APPLY AT PASCO COUNTY UTILITIES CUSTOMER SERVICE FOR TEMPORARY WATER SERVICE AT LEAST THREE DAYS PRIOR TO REQUIRED SERVICE DATE.
- THE METER WILL BE FURNISHED, INSTALLED AND INITIAL READING TAKEN BY PASCO COUNTY UTILITIES. ALL FITTINGS, PIPING, VALVES AND MATERIALS INCLUDING THE PASCO COUNTY APPROVED REDUCED PRESSURE BACKFLOW PREVENTION DEVICE SHALL BE FURNISHED AND INSTALLED BY THE CONTRACTOR/CUSTOMER.
- CONTRACTOR/CUSTOMER FURNISHED REDUCED PRESSURE BACKFLOW PREVENTION DEVICE MUST BE INSTALLED BEFORE THE METER IS INSTALLED BY PASCO COUNTY UTILITIES. THE APPROVED BACKFLOW PREVENTION DEVICE SHALL BE TESTED AND CERTIFIED BY PASCO COUNTY UTILITIES CERTIFIED BACKFLOW PREVENTION TECHNICIAN AT TIME OF METER INSTALLATION.
- CONTRACTOR/CUSTOMER SHALL PROTECT THE JUMPER/METER ASSEMBLY FROM DAMAGE.
- CONTRACTOR/CUSTOMER IS RESPONSIBLE FOR BACTERIOLOGICAL TESTING AFTER CONNECTION OF TEMPORARY WATER SERVICE.
- TEMPORARY CONSTRUCTION JUMPER/METER ASSEMBLY SHALL NOT BE REMOVED UNTIL SYSTEM IS ACCEPTED AND DEPARTMENT OF HEALTH CERTIFICATION AND CLEARANCE FOR SERVICE FORM HAS BEEN RECEIVED BY PASCO COUNTY UTILITIES.
- WHEN THE NEW SYSTEM IS ACCEPTED AND THE FINAL METER READING TAKEN BY PASCO COUNTY, THE TEMPORARY CONSTRUCTION JUMPER/METER ASSEMBLY MUST BE COMPLETELY REMOVED FROM M.J CAP TO M.J. CAP AND A NEW WATER MAIN IS TO BE CHLORINATED AND INSTALLED COMPLETING THE FINAL CONNECTION.
- BY APPLYING FOR SERVICE, CONTRACTOR/CUSTOMER AGREES TO TAKE WATER SERVICE FROM PASCO COUNTY UTILITIES IN ACCORDANCE WITH THE APPROPRIATE RATE SCHEDULE AND IN ACCORDANCE WITH PASCO COUNTY UTILITIES RULES AND REGULATION.

CREATED 11/18/05 REVISED 05/30/06 | **TEMPORARY CONSTRUCTION WATER SERVICE** | PROVIDED FOR INFORMATIONAL PURPOSES ONLY. NO MODIFICATIONS WITHOUT WRITTEN PCU APPROVAL | **PASCO COUNTY UTILITIES** | DETAIL 01

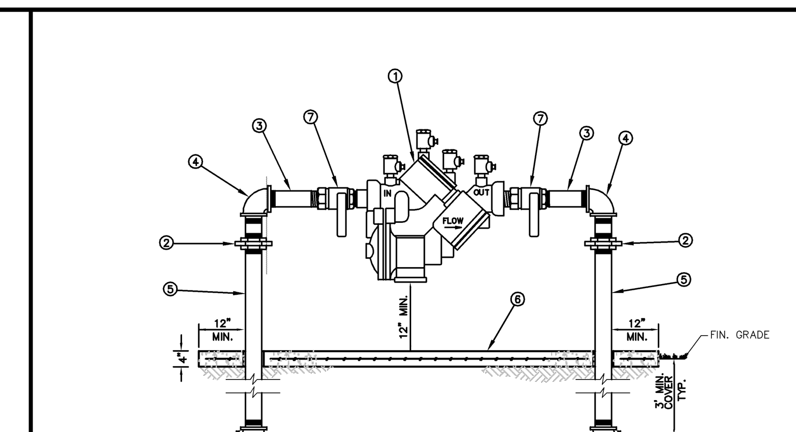

MATERIALS

ITEM	QUANT.	DESCRIPTION
1	1	BACKFLOW PREVENTER ASSEMBLY, REDUCED PRESSURE ZONE
2	2	UNIONS – GALV.
3	2	NIPPLES – BRASS
4	2	ELBOWS – GALV. 90°
5	2	RISER – GALV.
6	*	CONCRETE SLAB
7	2	BALL VALVES – BRASS OR S.S. (PROVIDED WITH BFP ASS'Y)

NOTE:
- FIELD ADJUST AND CUT ITEM 5 TO THE PROPER LENGTH.
- MINIMUM CLEARANCE OF 24" TO BE MAINTAINED AROUND DEVICE FOR TESTING.
- ENTIRE ASSEMBLY TO BE PAINTED SAFETY BLUE.
- CONCRETE SLAB TO EXTEND 12" MIN. AROUND ENTIRE DEVICE.
- DEVICE MUST BE LISTED WITH THE UNIVERSITY OF SOUTHERN CALIFORNIA FOUNDATION FOR CROSS CONNECTION CONTROL AND HYDRAULIC RESEARCH.

CREATED 02/24/03 REVISED | **REDUCED PRESSURE BACKFLOW PREVENTER (SINGLE SERVICE: 3/4", 1", 1-1/2", 2")** | PROVIDED FOR INFORMATIONAL PURPOSES ONLY. NO MODIFICATIONS WITHOUT WRITTEN PCU APPROVAL | **PASCO COUNTY UTILITIES** | DETAIL 11

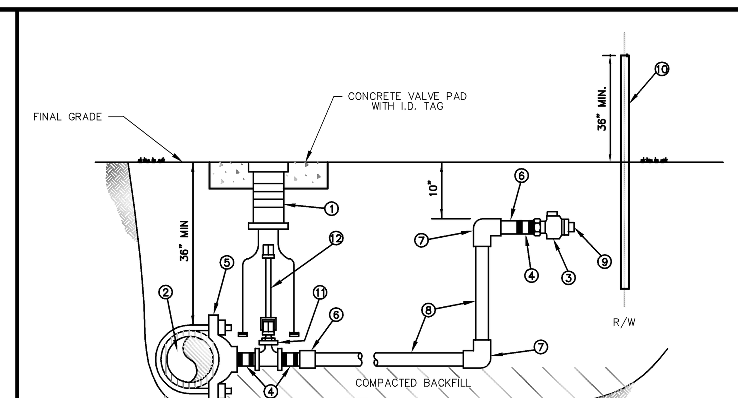

MATERIALS

ITEM	QUANT.	DESCRIPTION
1	1	BOX, VALVE CAST IRON SLIP TYPE
2	*	4" & LARGER PIPE, PVC (DR-18) OR D.I.P. (CLASS 50)
3	2	1 1/2", 2" CURB STOP BALL VALVE W/ LOCK WINGS (FIP x FIP OR FIP x CTS)
4	3	1 1/2", 2" NIPPLE, BRASS OR STAINLESS STEEL
5	1	1 1/2", 2" SADDLE, SERVICE (I.P. THREADS)
6	2	1 1/2", 2" ADAPTER (PVC SCH 40 / SLIP x FPT OR BRASS MIP x CTS)
7	2	1 1/2", 2" 90° ELBOW (SLIP x SLIP) SCH 40 (NOT REQUIRED FOR HDPE)
8	*	1 1/2", 2" PIPE, PVC (SCH 40) OR HDPE (3408) – LENGTH VARIES
9	1	1 1/2", 2" PLUG, THREADED (W/ TEFLON TAPE)
10	1	2" x 4" P.T. MARKER STAKE
11	1	2" GATE VALVE, IRON BODY W/ SQUARE NUT
12	1	VALVE EXTENSION ROD, AS REQUIRED (3' MAX. BELOW GRADE)

NOTE:
- A VALVE BOX SHALL BE REQUIRED ON ALL GATE VALVES.
- SERVICE SADDLES SHALL BE INSTALLED ON ALL TAPS TO P.V.C. (DR-18) WATER MAINS.
- 2" GATE VALVE TO BE RESILIENT WEDGE IRON BODY TYPE WITH 2" OPERATING UNIT.
- SADDLES 4" AND LARGER TO BE DUCTILE IRON DUAL STRAP TYPE.
- 1 1/2" BRASS REDUCER BUSHING REQUIRED WITH ITEM NO. 11 FOR 1 1/2" SERVICE.
- MARKER STAKES PAINTED SAFETY BLUE FOR WATER, PURPLE FOR REUSE.
- 4" DIAMETER CASING REQUIRED FOR ROAD CROSSINGS.

CREATED 02/24/03 REVISED | **WATER AND REUSE LATERAL SERVICE 1 1/2" OR 2" SERVICE LATERAL PVC (SCHEDULE 40)** | PROVIDED FOR INFORMATIONAL PURPOSES ONLY. NO MODIFICATIONS WITHOUT WRITTEN PCU APPROVAL | **PASCO COUNTY UTILITIES** | DETAIL 20

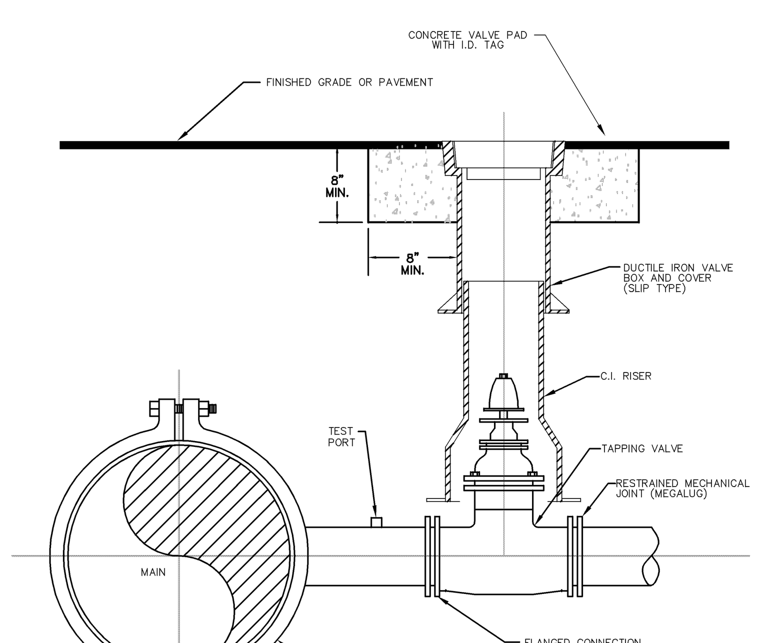

ELEVATION

NOTES:
- SADDLE CONNECTION WILL BE TESTED TO 150 PSI PRIOR TO TAPPING MAIN.
- MECHANICAL JOINTS/UNDERGROUND PIPING SHALL BE RESTRAINED AS SPECIFIED BY COUNTY/ENGINEER.
- VALVE EXTENSION ROD SHALL BE UTILIZED, AS NECESSARY, SO THAT VALVE OPERATING NUT IS A MAXIMUM OF 3' BELOW GRADE.

CREATED 02/24/03 REVISED | **WATER, REUSE, AND FORCE MAIN TAPPING DETAIL W/ VALVE LOCATION** | PROVIDED FOR INFORMATIONAL PURPOSES ONLY. NO MODIFICATIONS WITHOUT WRITTEN PCU APPROVAL | **PASCO COUNTY UTILITIES** | DETAIL 34

OIL/SEDIMENT INTERCEPTOR DETAIL

320-1500 GALLON
SAND-OIL INTERCEPTORS

TRAFFIC RATED ACCEPTED BY UPC

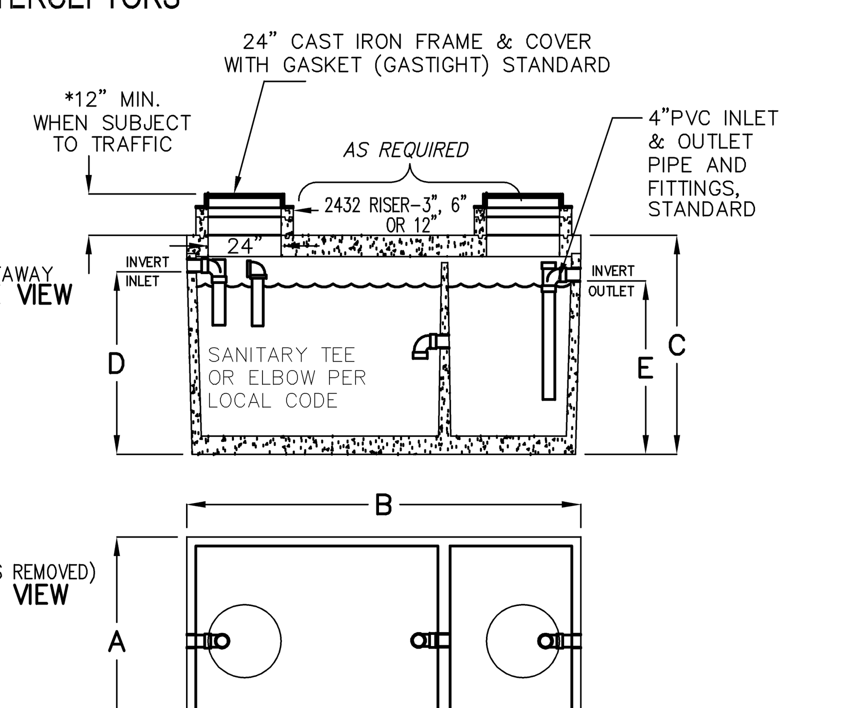

MODEL NUMBER	LIQUID CAPACITY GALLONS	WIDTH 'A'	OVERALL LENGTH 'B'	TANK HEIGHT 'C'	INLET 'D'	OUTLET 'E'	MINIMUM EXCAVATION WIDTH	MINIMUM EXCAVATION LENGTH	*DEPTH OF BURY	TANK WEIGHT LBS.
KJP320SO	320	3'–0"	7'–0"	4'–6"	3'–7"	3'–4"	4'–0"	8'–0"	6' MAX.	6,600
KJP500SO	500	4'–0"	6'–0"	5'–10"	4'–10"	4'–7"	5'–0"	7'–0"	6' MAX.	6,750
KJP750SO	750	4'–0"	8'–1"	6'–0"	5'–0"	4'–9"	5'–0"	9'–1"	6' MAX.	9,000
KJP1000SO	1000	5'–1"	8'–2"	6'–0"	5'–0"	4'–9"	6'–1"	9'–2"	6' MAX.	11,000
KJP1200SO	1200	5'–9"	8'–6"	6'–0"	5'–0"	4'–9"	6'–9"	9'–6"	6' MAX.	12,600
KJP1500SO	1500	5'–7"	10'–8"	6'–0"	5'–0"	4'–9"	6'–7"	11'–8"	6' MAX.	14,900

- TANK DESIGNED FOR H–20 TRAFFIC WHEEL LOAD WITH DRY SOIL CONDITIONS (WATER TABLE BELOW TANK).
- SUITABLE NATIVE OR SUB–BASE SHALL BE PREPARED TO HANDLE ANTICIPATED LOADS. THE EXCAVATION SHALL BE BEDDED WITH SUITABLE GRANULAR MATERIAL AND SHALL BE COMPACTED TO 90% MAXIMUM DRY DENSITY, OR TO REQUIREMENTS OF THE PROJECT GEOTECHNICAL ENGINEER.
- FOR COMPLETE DESIGN AND PRODUCT INFORMATION CONTACT JENSEN PRECAST.

10–01–03
JP320–JP1500_SO–W.dwg
© 2003 Jensen Precast

JENSEN PRECAST.

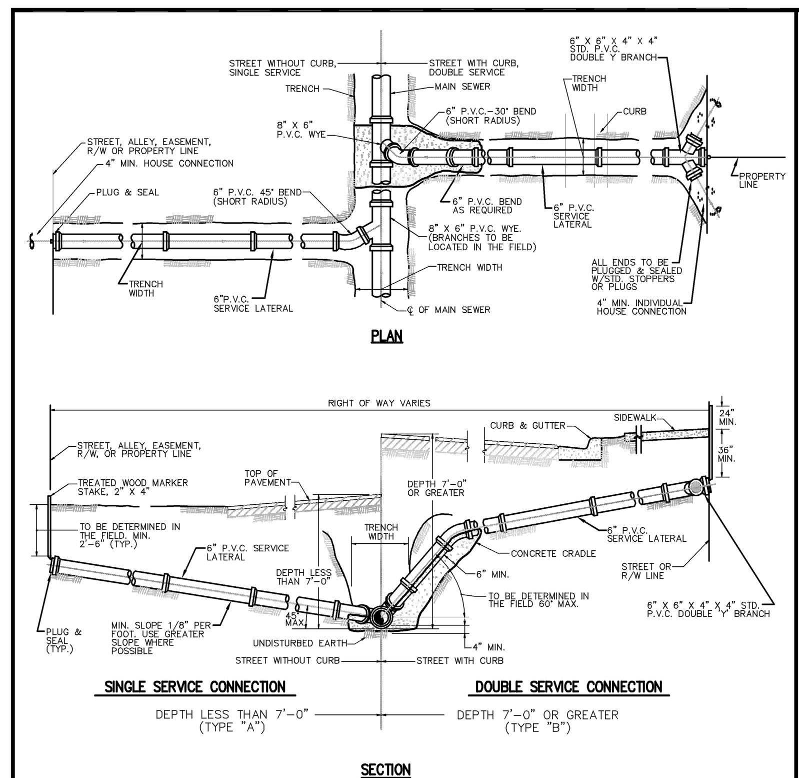

NOTE:
- CONTRACTOR SHALL MAKE, ON A CLEAN SET OF PLANS, THE FINAL STATIONING OR DISTANCE AND DIRECTION FROM MANHOLE OF EACH SERVICE LATERAL AND THEN GIVE TO ENGINEER FOR RECORD PURPOSES.
- PROVIDE 2" x 4" PRESSURE TREATED WOOD MARKER STAKE AT ALL SANITARY SERVICES (INCLUDE IN PIPE PRICE), TOP OF STAKE TO BE PAINTED WITH GREEN PAINT.
- THE MINIMUM DIAMETER OF ALL SERVICE LATERALS SHALL BE 6 INCHES.

CREATED 02/24/03 REVISED | **SEWER LATERAL CONNECTION** | PROVIDED FOR INFORMATIONAL PURPOSES ONLY. NO MODIFICATIONS WITHOUT WRITTEN PCU APPROVAL | **PASCO COUNTY UTILITIES** | DETAIL 41

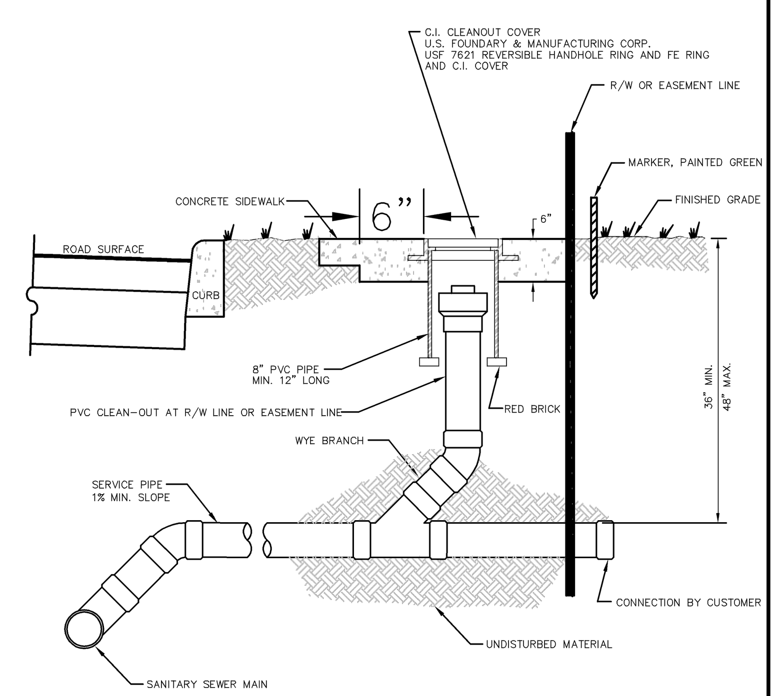

NTS

CREATED 02/24/03 REVISED | **SANITARY SEWER – SINGLE WYE CONNECTION AND TYPICAL CLEAN-OUT** | PROVIDED FOR INFORMATIONAL PURPOSES ONLY. NO MODIFICATIONS WITHOUT WRITTEN PCU APPROVAL | **PASCO COUNTY UTILITIES** | DETAIL 42

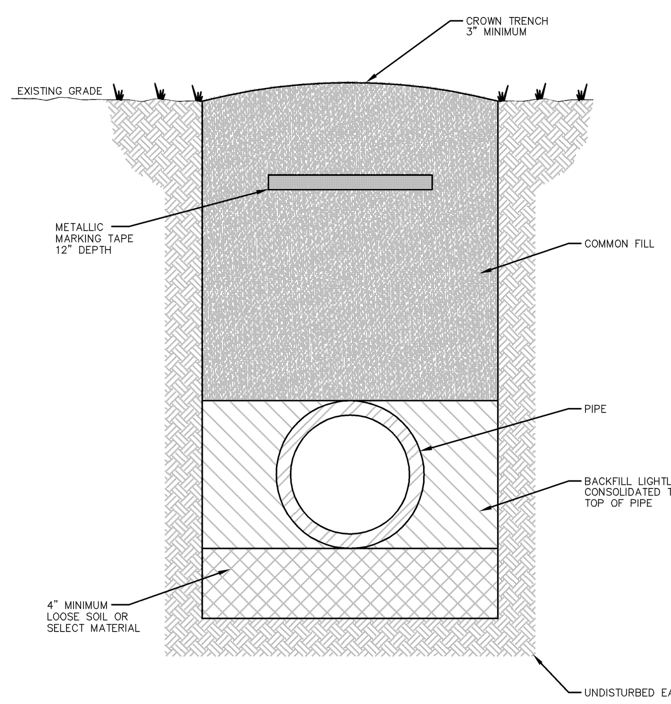

NOTES:
- LOOSE SOIL OR SELECT MATERIAL IS NATIVE SOIL EXCAVATED FROM THE TRENCH FREE OF ROCKS AND FOREIGN MATERIAL.
- COMMON FILL TO BE PLACED AND COMPACTED IN 12" LAYERS. ROLLING EQUIPMENT SHALL NOT BE USED FOR COMPACTION UNTIL A MINIMUM OF 18" OF COMMON FILL HAS BEEN PLACED AND COMPACTED OVER THE PIPE. THREE FEET OF FILL SHALL BE PLACED BEFORE A HYDROHAMMER MAY BE USED FOR COMPACTION.

NTS

CREATED 02/24/03 REVISED | **PIPE LAYING CONDITIONS STANDARD UNPAVED AREAS** | PROVIDED FOR INFORMATIONAL PURPOSES ONLY. NO MODIFICATIONS WITHOUT WRITTEN PCU APPROVAL | **PASCO COUNTY UTILITIES** | DETAIL 32

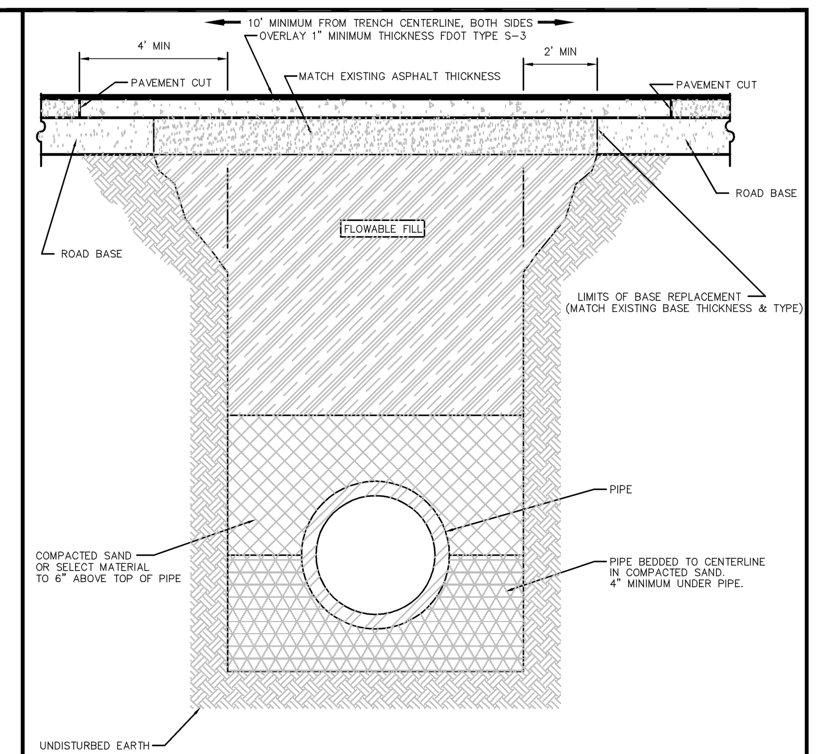

NOTE:
- SELECT MATERIAL IS NATIVE SOIL EXCAVATED FROM THE TRENCH FREE OF ROCKS AND FOREIGN MATERIAL.
- COMPACTION TO TOP OF PILE IS TO BE APPROXIMATELY 90% STANDARD PROCTOR, AASHTO T–99.
- EXISTING CONCRETE/ASPHALT PAVEMENT SURFACE AND BASE TO BE CUT SQUARE WITH CONCRETE SAW.

NTS

CREATED 03/06/03 REVISED | **PIPE LAYING CONDITIONS FLOWABLE FILL BACKFILL STANDARD EXISTING PAVED AREAS & ROADWAYS** | PROVIDED FOR INFORMATIONAL PURPOSES ONLY. NO MODIFICATIONS WITHOUT WRITTEN PCU APPROVAL | **PASCO COUNTY UTILITIES** | DETAIL 33

UTILITY NOTES

1. CONTRACTOR SHALL BE RESPONSIBLE FOR ALL REQUIRED TESTING.

2. CONTRACTOR SHALL COORDINATE WITH COUNTY PRIOR TO SUBMITTING BID.

3. CONTRACTOR IS TO FIELD VERIFY LOCATIONS OF ALL EXISTING UTILITIES AND CONTACT THE APPROPRIATE UTILITY COMPANIES PRIOR TO CONSTRUCTION.

4. ALL DISTURBED RIGHT–OF–WAY SHALL BE SODDED. CONTRACTOR TO NOTIFY PUBLIC WORKS 24 HOURS PRIOR TO BEGINNING ANY WORK IN THE COUNTY RIGHT–OF–WAY AND PRIOR TO PLACEMENT OF CONCRETE, ASPHALT OR SOD FOR GRADE VERIFICATIONS.

5. ANY TRENCHES THAT PASS WITHIN 20' OF THE TRUNK OF AN EXISTING TREE MUST BE HAND DUG AND ANY ROOTS OVER 1" IN DIAMETER MUST BE TRENCHED UNDER TO ALLOW THE ROOT TO REMAIN IN TACK.

6. ALL FIRE HYDRANTS MUST BE FLOW TESTED AND COLOR CODED BASED ON FLOW RESULTS.

7. ALL UTILITY SYSTEM–DESIGN MATERIALS AND WORKMANSHIP MUST COMPLY WITH STANDARDS FOR DESIGN AND CONSTRUCTION OF WATER, WASTEWATER AND RECLAIMED WATER FACILITIES SPECS. LATEST EDITION.

8. CONNECTIONS INTO EXISTING COUNTY–OWNED SYSTEM SHALL BE VIA WET TAP. WET TAPS SHALL BE PERFORMED BY PASCO COUNTY UTILITIES SERVICES BRANCH AT THE DEVELOPER'S EXPENSE. EXCAVATION, BACK FILL, AND SURFACE RESTORATION SHALL BE THE CONTRACTOR'S RESPONSIBILITY. MATERIAL FOR WET TAPS LARGER THAN TWO INCHES SHALL BE PROVIDED AND INSTALLED BY THE PROJECT CONTRACTOR.

9. THE PASCO COUNTY UTILITIES SERVICES BRANCH SHALL NOT OWN OR MAINTAIN WATER AND SEWER LINES OR FACILITIES ON–SITE.

10. ALL PROJECTS MUST COMPLY WITH PASCO COUNTY FIRE HYDRANT ORDINANCE No. 46–51.

11. FIRE HYDRANTS SHALL BE INSTALLED AND IN SERVICE PRIOR TO THE ACCUMULATION OF COMBUSTIBLES.

12. PER THE NATIONAL FIRE PROTECTION ASSOCIATION, NFPA–1, 16.4.3.1.3: WHERE UNDERGROUND WATER MAINS AN HYDRANTS ARE TO BE PROVIDED, THEY SHALL BE INSTALLED, COMPLETED, AND IN SERVICE PRIOR TO CONSTRUCTION WORK.

13. PER NFPA–1, 18.3.4.1: CLEARANCES OF 7 ½ FEET IN FRONT OF AND TO THE SIDES OF THE FIRE HYDRANT WITH A 4 FOOT CLEARANCE TO THE REAR MUST BE MAINTAINED AT ALL TIMES.

14. GATED ENTRIES REQUIRE A SIREN OPERATING SYSTEM OR A 3M OPTICOM SYSTEM FOR EMERGENCY ACCESS.

15. FIRE PROTECTION SHALL MEET THE REQUIREMENTS OF THE PASCO COUNTY CODE OF ORDINANCES, CHAPTER 46, FIRE PREVENTION AND PROTECTION, AND PLANS SHALL COMPLY WITH REFERENCED REQUIREMENTS.

16. THE SUBJECT PROPERTY IS LOCATED WITHIN THE 5 YEAR AND 10 YEAR WELL HEAD PROTECTION AREA AND SHALL COMPLY WITH GROUNDWATER PROTECTION ORDINANCE No. 02–27.

17. IN CONSIDERATION OF PASCO COUNTY'S AGREEMENT TO PROVIDE POTABLE WATER AND/OR RECLAIMED WATER TO THE SUBJECT PROPERTY, DEVELOPER/OWNER, AND ITS SUCCESSORS AND ASSIGNS, AGREE TO THE FOLLOWING:
(A) IN THE EVENT OF PRODUCTION FAILURE OR SHORTFALL BY TAMPA BAY WATER, AS SET FORTH IN SECTION 3.19 OF THE INTER LOCAL AGREEMENT CREATED BY TAMPA BAY WATER, DEVELOPER/OWNER SHALL TRANSFER TO PASCO COUNTY ANY AND ALL WATER USE PERMITS OR WATER USE RIGHTS THE DEVELOPER/OWNER MAY HAVE TO USE OR CONSUME SURFACE OR GROUND WATER WITHIN PASCO COUNTY.

(B) PRIOR TO DEVELOPER/OWNER SELLING WATER OR WATER USE PERMITS OR WATER USE RIGHTS, DEVELOPER/OWNER SHALL NOTIFY PASCO COUNTY, AND PASCO COUNTY SHALL HAVE A RIGHT OF FIRST REFUSAL TO PURCHASE SUCH WATER OR WATER USE PERMITS OR WATER USE RIGHTS.

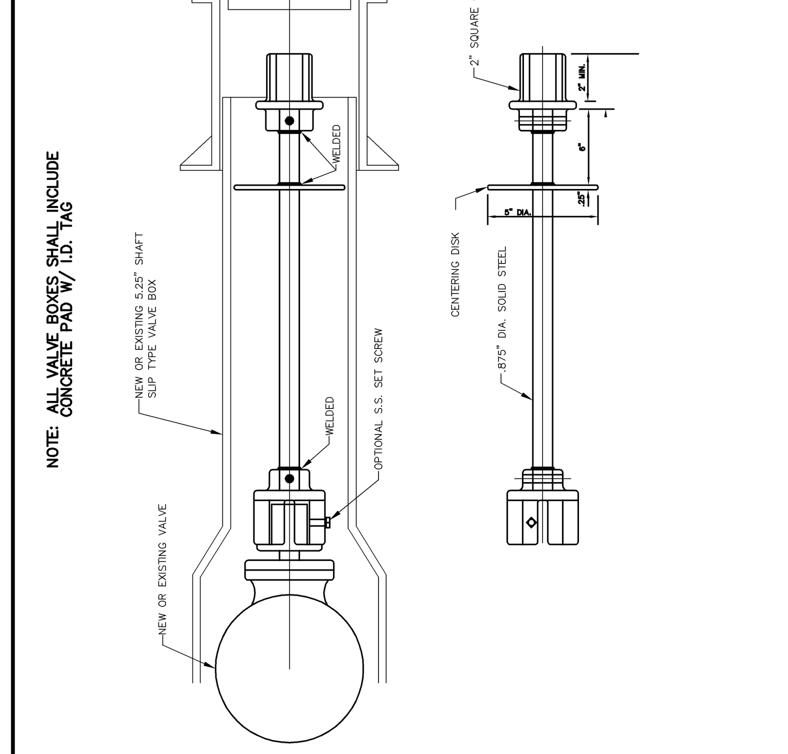

CREATED 02/24/03 REVISED | **VALVE EXTENSION RODS** | PROVIDED FOR INFORMATIONAL PURPOSES ONLY. NO MODIFICATIONS WITHOUT WRITTEN PCU APPROVAL | **PASCO COUNTY UTILITIES** | DETAIL 26

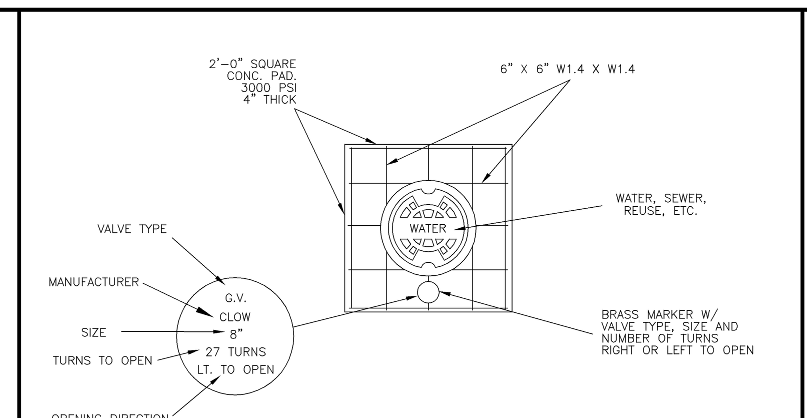

TYPICAL CONCRETE VALVE PAD

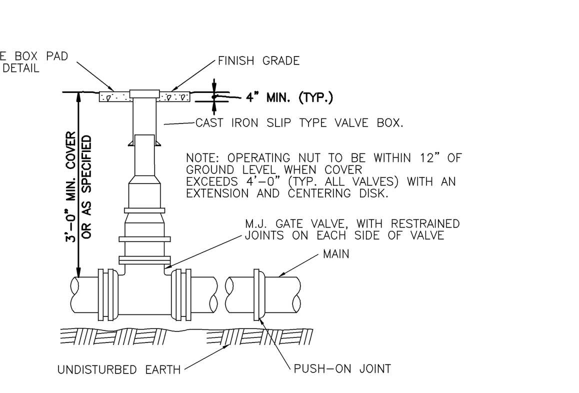

CREATED 02/24/03 REVISED | **VALVE BOX DETAIL SLIP TYPE** | PROVIDED FOR INFORMATIONAL PURPOSES ONLY. NO MODIFICATIONS WITHOUT WRITTEN PCU APPROVAL | **PASCO COUNTY UTILITIES** | DETAIL 27

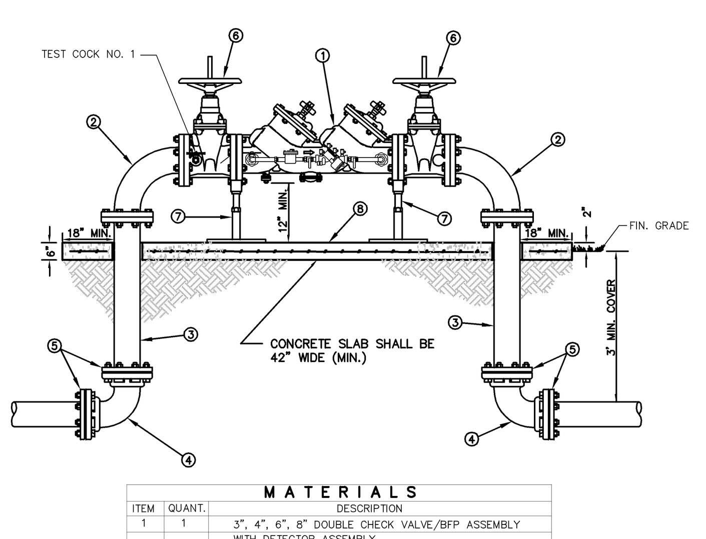

MATERIALS

ITEM	QUANT.	DESCRIPTION
1	1	3", 4", 6", 8" DOUBLE CHECK VALVE/BFP ASSEMBLY
		WITH DETECTOR ASSEMBLY
2	2	3", 4", 6", 8" BEND, 90° FLANGE x FLANGE
3	2	3", 4", 6", 8" SPOOL PIECE FLG. x PE. D.I.P.
4	2	3", 4", 6", 8" BEND, 90° M.J. x M.J.
5	4	3", 4", 6", 8" GLAND, RETAINER M.J. (MEGALUG)
6	2	3", 4", 6", 8" VALVE, GATE FLG. x FLG. RESILIENT
		WEDGE O.S. & Y.
7	2	SUPPORT (AS NEEDED)
8	1	CONCRETE SLAB (6" THICK – 42" WIDE MIN.)

NOTE:
- NO TIE RODS OR EYE BOLT RETAINERS PERMITTED ABOVE GROUND.
- B.F.P. ASSEMBLY TO BE INSTALLED LEVEL & PLUMB.
- MINIMUM CLEARANCE OF 36" TO BE MAINTAINED AROUND ENTIRE DEVICE FOR TESTING
- ENTIRE ASSEMBLY TO BE PAINTED SAFETY BLUE.
- DETECTOR BY–PASS ASSEMBLY TO BE FACTORY INSTALLED AND CERTIFIED
- ALL MECHANICAL JOINTS SHALL BE RESTRAINED WITH MEGALUGS OR APPROVED EQUAL
- BELL JOINT RESTRAINERS SHALL BE PROVIDED ON ALL UNDERGROUND PIPING AS SPECIFIED IN JOINT RESTRAINT TABLE DETAIL
- ALL ABOVE GROUND PIPING SHALL BE FLANGED DUCTILE IRON PIPE (NO GALVANIZED OR PVC)
- ITEM 3 SHALL BE FIELD CUT TO PROPER LENGTH TO ACHIEVE DESIGNATGED GROUND CLEARANCE
- IF SO SPECIFIED, ENTIRE ASSEMBLY TO BE ENCLOSED IN 6' CHAIN LINK FENCE.
- BFP DEVICE MUST BE LISTED WITH THE UNIVERSITY OF SOUTHERN CALIFORNIA FOUNDATION FOR CROSS CONNECTION CONTORL AND HYDRAULIC RESEARCH.

CREATED 02/24/03 REVISED | **DOUBLE DETECTOR CHECK VALVE ASSEMBLY/BACKFLOW PREVENTER (SINGLE SERVICE: 3", 4", 6", 8", 10")** | PROVIDED FOR INFORMATIONAL PURPOSES ONLY. NO MODIFICATIONS WITHOUT WRITTEN PCU APPROVAL | **PASCO COUNTY UTILITIES** | DETAIL 9

FDC W/ STORTZ CONNECTION

STORZ SPECIFICATION:
STRAIGHT PATTERN STORZ ADAPTER. 4" NPT X 5" TORZ WITH 5" CAP. HARD–COATED ALUMINUM CONSTRUCTION AND GALVANIZED STEEL ELBOW.

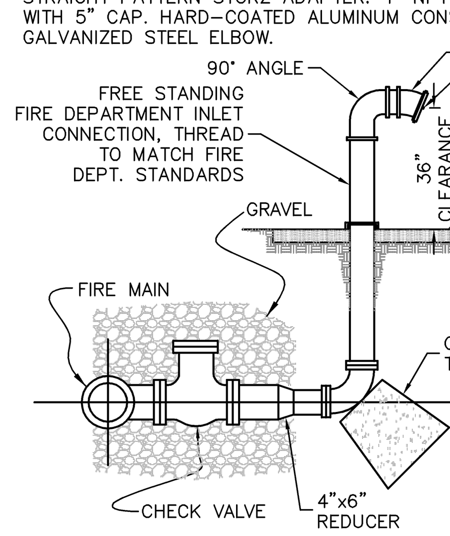

FDC SPECIFICATION:
FEMALE HOSE THREAD SWIVEL INLETS, PLUGS WITH CHAINS, 18" COVER SLEEVE, AND IDENTIFICATION PLATE. CAST BRASS CONSTRUCTION.

SPRINKLER RISER DETAIL

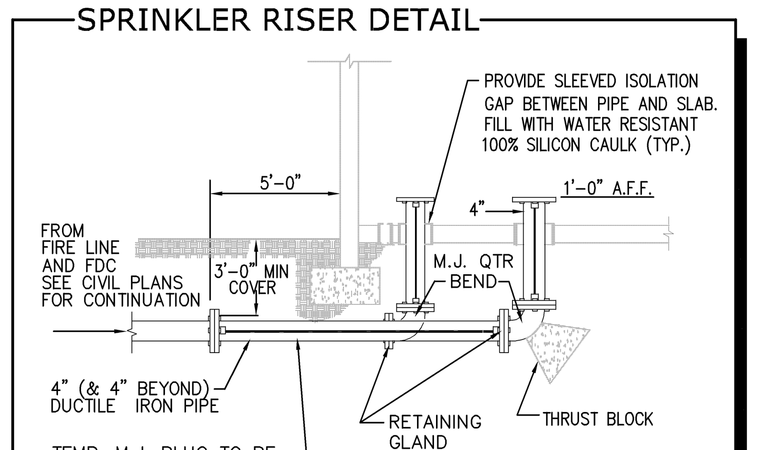

THIS DRAWING AND THE DESIGN SHOWN ARE THE PROPERTY OF SPRING ENGINEERING, INC. AND ARE NOT TO BE REPRODUCED, COPIED, PUBLISHED, OR USED IN WHOLE OR PART WITHOUT WRITTEN CONSENT. THEY ARE TO BE USED ONLY FOR THE SITE AND PROJECT IDENTIFIED AND SHALL BE RETURNED UPON REQUEST.

100%
CONSTRUCTION DOCS.
ISSUE DATE: 08.17.15

REV	DATE	DESCRIPTION

REVISIONS

ROLAND P. DOVE, P.E.
P.E. NO. 36933
DATE
NOT VALID WITHOUT SIGNATURE AND EMBOSSED SEAL

Volkswagen
Of Wesley Chapel
SR 56 And Silver Maple Pkwy
Wesley Chapel, Florida

CONTRACT DATE:
March 10, 2014

SPRING ENGINEERING, INC.
ENGINEERING • LAND PLANNING • ARCHITECTURE
3014 U.S. HWY 19, HOLIDAY, FL (727) 938–1516
FL COA NO. 00005158 & LICENSE NO. AIA–C001747

UTILITY DETAILS

DESIGNED BY: JAY
DRAWN BY: JAY
CHECKED BY: RPD
JOB NO.
2013-55
SHEET NO.
C4.1

SECTIONS 26, TOWNSHIP 26 SOUTH, RANGE 19 EAST
PASCO COUNTY, FLORIDA

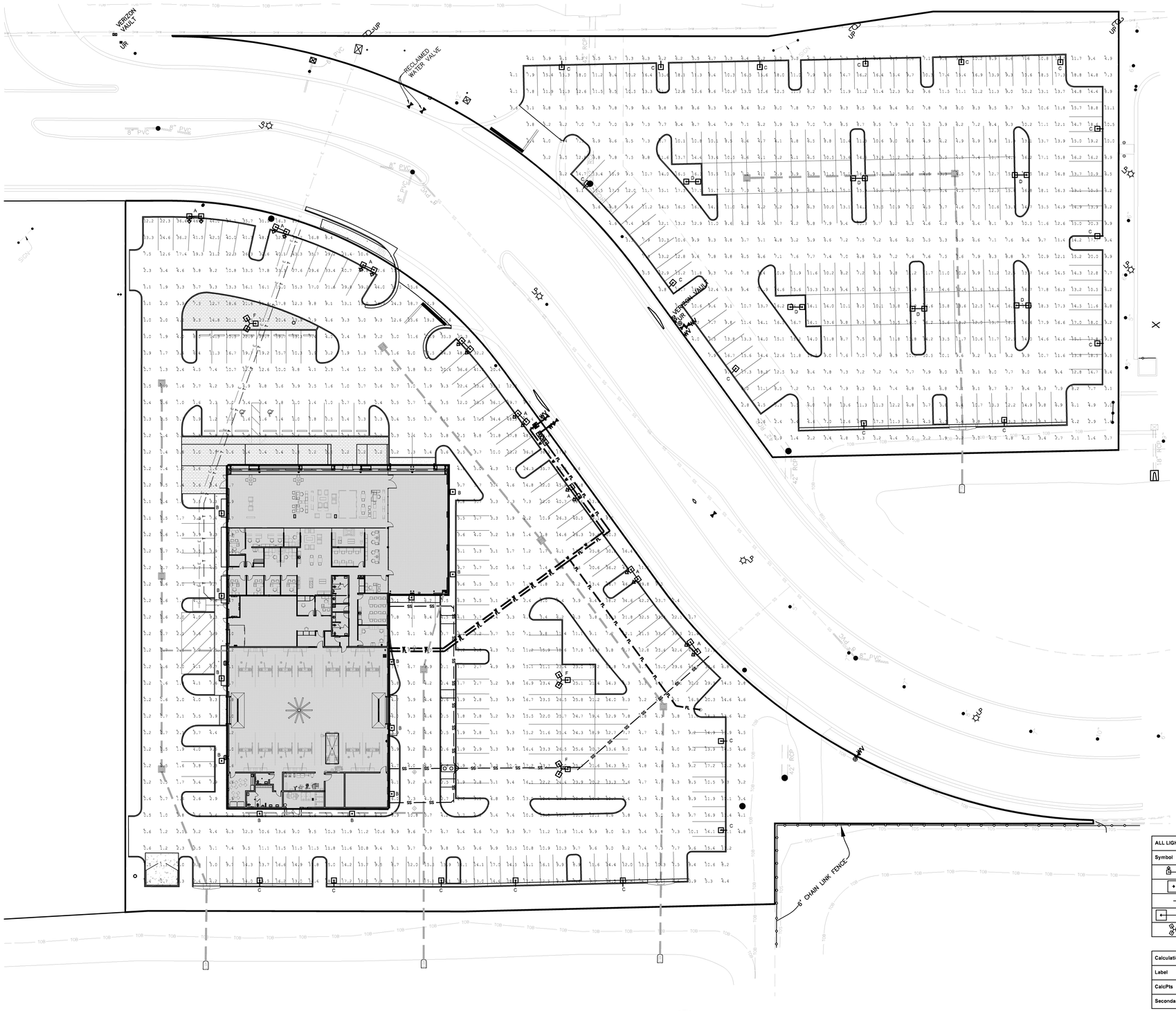

ALL LIGHTING TO BE SUPPLIED BY DESIGN LIGHTING. CONTACT BRAD WAMPLER @ 256.635.0923.						
Symbol	Qty	Label	Arrangement	Lumens	LLF	Description
	8	A	D180	-1	1.000	VLX-1-T4A-128LC-7-5K-UNV @ 20' MTG. HT.
	12	B	SINGLE	-1	1.000	VSC-1-T3-48LC-5-5K-UNV @ 15' MTG. HT.
	21	C	SINGLE	-1	1.000	VLX-1-T3-128LC-7-5K-UNV @ 20' MTG. HT.
	6	D	BACK-BACK	-1	1.000	VLX-1-T5-128LC-7-5K-UNV @ 20' MTG. HT.
	3	F	3 @ 120 DEGREES	-1	1.000	VLX-1-T5-128LC-7-5K-UNV @ 20' MTG. HT.

Calculation Summary							
Label	CalcType	Units	Avg	Max	Min	Avg/Min	Max/Min
CalcPts	Illuminance	Fc	10.19	52.4	0.1	101.90	524.00
Secondary Lot	Illuminance	Fc	9.85	20.3	0.7	14.07	29.00

NORTH

PHOTO METRIC PLAN
SCALE: 1"= 30'

30 15 0 30 60

THIS DRAWING AND THE DESIGN SHOWN ARE THE PROPERTY OF SPRING ENGINEERING, INC. AND ARE NOT TO BE REPRODUCED, COPIED, PUBLISHED, OR USED IN WHOLE OR PART WITHOUT WRITTEN CONSENT. THEY ARE TO BE USED ONLY FOR THE SITE AND PROJECT IDENTIFIED AND SHALL BE RETURNED UPON REQUEST.

100%
CONSTRUCTION DOCS.
ISSUE DATE: 08.17.15

REVISIONS

REV	DATE	DESCRIPTION

ROLAND P. DOVE, P.E.
P.E. NO. 36933
DATE

Volkswagen
Of Wesley Chapel

SR 56 And Silver Maple Pkwy
Wesley Chapel, Florida

CONTRACT DATE:
March 10, 2014

SPRING ENGINEERING, INC.
ENGINEERING • LAND PLANNING • ARCHITECTURE
3014 U.S. HWY 19, HOLIDAY, FL (727) 938-1516
FL COA NO. 00005158 & LICENSE NO. AA-C001747

PHOTOMETRIC PLAN

DESIGNED BY: JAY
DRAWN BY: JAY
CHECKED BY: RPD
JOB NO.
2013-55

SHEET NO.
C4.2

SECTION 26, TOWNSHIP 26 SOUTH, RANGE 19 EAST
PASCO COUNTY, FLORIDA

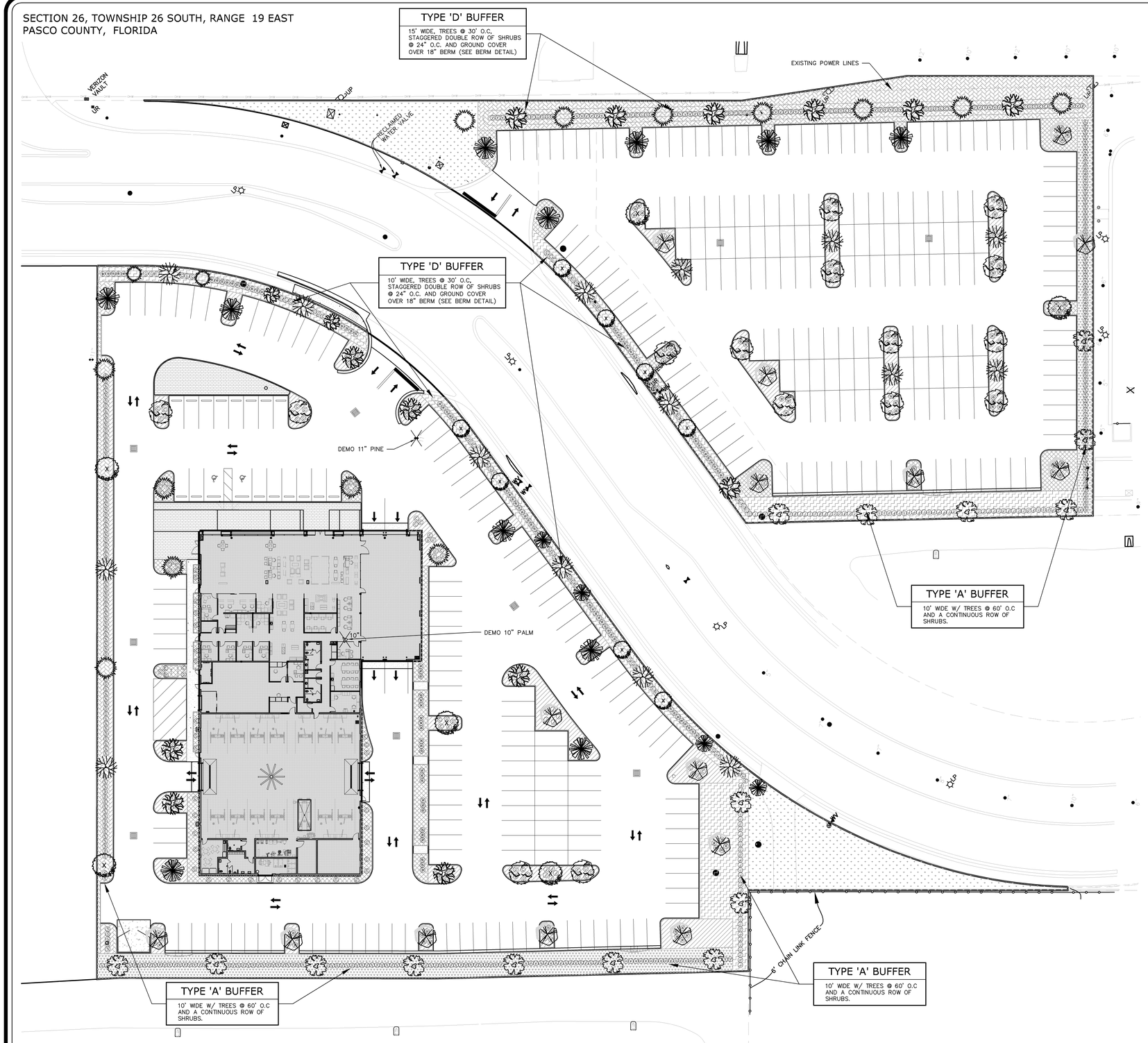

NORTH

LANDSCAPE PLAN

SCALE: 1"= 30'

30 15 0 30 60

PLANTING LEGEND

TREES	ID	NAME	QTY	DT	NF	DESCRIPTION
	OAK	QUERCUS VIRGINIANA (LIVE OAK)	15	YES	YES	6' tall (min); 2" caliper (min)
	ELM	ULMUS ALATA (WINGED ELM)	15	NO	YES	6' tall (min); 2" caliper (min)
	HICKORY	CARYA FLORIDANA (SCRUB HICKORY)	15	YES	YES	6' tall (min); 2" caliper (min)
	REDBUD	CERCIS CANADENSIS (EASTERN REDBUD)	15	YES	YES	6' tall (min); 2" caliper (min)
	MAPLE	ACER RUBRUM (RED MAPLE)	15	YES	YES	6' tall (min); 3" caliper (min)
	OAK	QUERCUS CHAPMANII (CHAPMAN OAK)	14	YES	YES	6' tall (min); 2" caliper (min)
	WAX MYRTLE	MYRICA CERIFERA (WAX MYRTLE)	15	YES	YES	6' tall (min); 2" caliper (min)
	DOGWOOD	CORNUS FLORIDA (FLOWERING DOGWOOD)	15	YES	YES	6' tall (min); 2" caliper (min)
TOTAL TREES / DROUGHT TOLERANT / NATIVE			119	104	119	REQUIRED (50% DT) / (30% NF)
TOTAL % / DROUGHT TOLERANT / NATIVE			100%	87%	100%	PROVIDED (87% DT) / (100% NF)
SHRUBS	ID	NAME	QTY	DT	NF	DESCRIPTION
V	SV	VIBURNUM SUSPENSUM (SANDANKWA VIBURNUM)	164	YES	YES	18" tall (min); 3 gal. container (min); plant 36" O.C.
C	C	ZAMIA FLORIDANA (COONTIE)	219	YES	YES	18" tall (min); 3 gal. container (min); plant 36" O.C.
S	TS	LEUCOPHYLLUM FRUTESCENS (TEXAS SAGE)	186	YES	NO	18" tall (min); 3 gal. container (min); plant 36" O.C.
W	WV	VIBURNUM OBOVATUM (WALTER VIBURNUM)	203	NO	YES	18" tall (min); 3 gal. container (min); plant 36" O.C.
J	DJ	JASMINUM MULTIFLORUM (DOWNY JASMINE)	180	YES	YES	18" tall (min); 3 gal. container (min); plant 36" O.C.
GROUND COVER						
	PL	LANTANA MONTEVIDENSIS (PURPLE LANTANA)	1400	YES	NO	1 gal. container (min); plant 24" O.C.
	BD	EVOLVULUS GLOMERATA (BLUE DAZE)	1267	YES	NO	1 gal. container (min); plant 24" O.C.
	SF	NEPHROLEPIS EXALTATA (SWORD FERN)	1020	NO	YES	1 gal. container (min); plant 24" O.C.
	BES	SPARTINA ALTERNIFLORA (BLACK-EYED SUSAN)	1440	YES	YES	1 gal. container (min); plant 24" O.C.
	LS	LIRIOPE SPP (LIRIOPE)	1000	YES	YES	1 gal. container (min); plant 24" O.C.
	SOD	PASPALUM NOTATUM (BAHIA GRASS)	–	YES	YES	30% MAX SOD COVERAGE = 8,000 SF
						ALL WORK IN THE R/W SHALL BE SODED
	MULCH	RED CEDAR MULCH				ALL TREES, SHRUBS AND GROUND COVER
TOTAL PLANTS / DROUGHT TOLERANT / NATIVE			7,079	5,856	4,226	REQUIRED (50% DT) / (30% NF)
TOTAL % / DROUGHT TOLERANT / NATIVE			100%	83%	60%	PROVIDED (83% DT) / (60% NF)

NOTE:
1. ALL PLANTS TO BE FLORIDA No. 1 GRADE OR BETTER.
2. ALL PLANTS TO BE MINIMUM SIZE SHOWN ABOVE UNLESS NOTED OTHERWISE.
3. MULTIPLE TRUNK TREES ARE TO BE (MIN.) 3 TRUNKS, 1" EA., 6' TALL.

LDC 905.2 & FDOT INDEX 546

a) LANDSCAPING SHALL BE PLANTED IN SUCH A MANNER AS NOT TO IMPEDE THE ACCESS FOR MAINTENANCE AND STORM-WATER RUN-OFF FLOW TO OR IN A DITCH, SWALE, OR POND."

b) ALL THE TREES OVERHANG TO THE PUBLIC RIGHT OF WAY SHALL BE TRIMMED AND PRUNED TO MAINTAIN A MINIMUM VERTICAL CLEAR HEIGHT OF 8' FROM THE FINISHED GROUND SURFACE OF THE SIDEWALK TO THE BOTTOM OF CANOPY/ 16.6' CLEAR HEIGHT (LDC 901.6.D.7) ABOVE THE ROADWAY PATHS"

LANDSCAPE CALCULATIONS

LDC 905.2.C – GENERAL STANDARDS
1a) **FINK AQUISITIONS, LLC** SHALL BE RESPONSIBLE FOR MAINTANENCE OF ALL ON-SITE LANDSCAPING.

LDC 905.2.D – DIVERSITY
- 8 TREE SPECIES REQUIRED – **8 TREE SPECIES PROVIDED.**
- DROUGHT TOLERANT PLANTS REQUIRED 7,079x(50%)=3,540, **PROVIDED 5,856.**
- NATIVE FLORIDIAN SPECIES REQUIRED 7,079x(30%)=2,124, **PROVIDED 4,226.**
- NO SINGLE PLANT SPECIES SHALL EXCEED 25%

LDC 905.2.D.3 – VEHICULAR USE AREA
- 139,653 SF x 10% = 13,965 SF REQUIRED ÷ 200 SF = 70 TREE REQUIRED
  54,268 SF PROVIDED W/ 119 TREES PROVIDED

LDC 905.2.D.4 – BUILDING PERIMETER
- BUILDING AREA = 22,755 SF x 10% = 2,276 SF REQUIRED; **2,344 SF PROVIDED**
- BUILDING PERIMETER = 682 LF x 50% = 341 LF REQUIRED; **413 LF PROVIDED**

NOTES

IRRIGATION PLANS ARE DESIGNED TO COMPLY WITH LANDSCAPING AND IRRIGATION ORDINANCE SECTION 15.

TREE REMOVAL TABLE

(1) 10" PALM TREE
(1) 11" PINE TREE

21" / 3 = 7" REQUIRED
357" PROVIDED

BERM SECTION

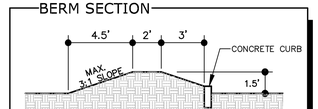

MINIMUM DIMMENSIONS FOR BERM SECTION

THIS DRAWING AND THE DESIGN SHOWN ARE THE PROPERTY OF SPRING ENGINEERING, INC. AND ARE NOT TO BE REPRODUCED, COPIED, PUBLISHED, OR USED IN WHOLE OR PART WITHOUT WRITTEN CONSENT. THEY ARE TO BE USED ONLY FOR THE SITE AND PROJECT IDENTIFIED AND SHALL BE RETURNED UPON REQUEST.

100%
CONSTRUCTION DOCS.
ISSUE DATE: 08.17.15

REVISIONS

REV	DATE	DESCRIPTION

ROLAND P. DOVE, P.E.
P.E. NO. 36933
DATE

Volkswagen Of Wesley Chapel
SR 56 And Silver Maple Pkwy
Wesley Chapel, Florida

CONTRACT DATE:
March 10, 2014

SPRING ENGINEERING, INC.
ENGINEERING • LAND PLANNING • ARCHITECTURE
3014 U.S. HWY 19, HOLIDAY, FL (727) 938-1516
FL COA NO. 00005158 & LICENSE NO. AA-C001747

LANDSCAPE PLAN

DESIGNED BY: JAY
DRAWN BY: JAY
CHECKED BY: RPD
JOB NO.
2013-55

SHEET NO.
C5.0

DASHED LINES ILLUSTRATE BRANCHES AND STUMPS THAT ARE TO BE REMOVED.
DO NOT REMOVE THE LEADER.

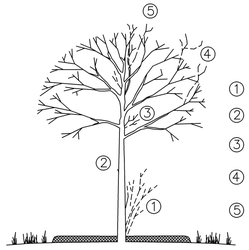

1 DECIDUOUS TREE PRUNING

IF ROOTBALL IS WRAPPED IN NON-BIODEGRADEABLE BURLAP, REMOVE ENTIRE WRAP AFTER IT IS PLACED IN PIT. WHEN BACKFILLING, PLACE PLANTING SOIL IN TWO LIFTS. AFTER FIRST LIFT, PUDDLE SOIL IN WITH WATER TO REMOVE ALL AIR POCKETS. PLACE SECOND LIFT AND REPEAT. CONTINUE TO PUDDLE AND FILL AS NECESSARY.

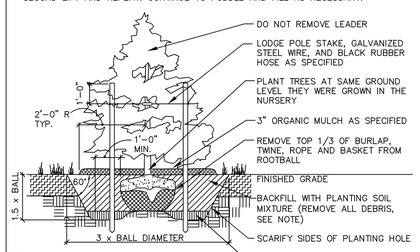

NOTE:
ALL TREE STAKES AND SUPPORT WIRE ARE TO BE REMOVED AFTER ONE (1) COMPLETE GROWING SEASON.

2 EVERGREEN TREE PLANTING DETAIL

IF ROOTBALL IS WRAPPED IN NON-BIODEGRADEABLE BURLAP, REMOVE ENTIRE WRAP AFTER IT IS PLACED IN PIT. WHEN BACKFILLING, PLACE PLANTING SOIL IN TWO LIFTS. AFTER FIRST LIFT, PUDDLE SOIL IN WITH WATER TO REMOVE ALL AIR POCKETS. PLACE SECOND LIFT AND REPEAT. CONTINUE TO PUDDLE AND FILL AS NECESSARY.

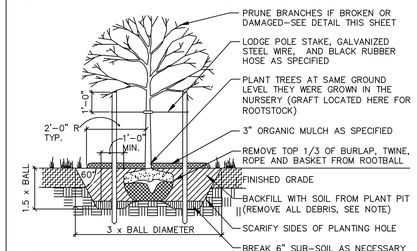

NOTE:
ALL TREE STAKES AND SUPPORT WIRE ARE TO BE REMOVED AFTER ONE (1) COMPLETE GROWING SEASON.

3 CANOPY TREE (2" or less) DETAIL

IF ROOTBALL IS WRAPPED IN NON-BIODEGRADEABLE BURLAP, REMOVE ENTIRE WRAP AFTER IT IS PLACED IN PIT. WHEN BACKFILLING, PLACE PLANTING SOIL IN TWO LIFTS. AFTER FIRST LIFT, PUDDLE SOIL IN WITH WATER TO REMOVE ALL AIR POCKETS. PLACE SECOND LIFT AND REPEAT. CONTINUE TO PUDDLE AND FILL AS NECESSARY.

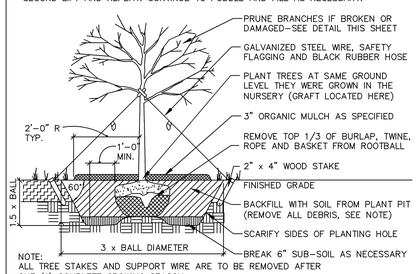

NOTE:
ALL TREE STAKES AND SUPPORT WIRE ARE TO BE REMOVED AFTER ONE (1) COMPLETE GROWING SEASON.

4 CANOPY TREE (2"+ cal.) DETAIL

IF ROOTBALL IS WRAPPED IN NON-BIODEGRADEABLE BURLAP, REMOVE ENTIRE WRAP AFTER IT IS PLACED IN PIT. WHEN BACKFILLING, PLACE PLANTING SOIL IN TWO LIFTS. AFTER FIRST LIFT, PUDDLE SOIL IN WITH WATER TO REMOVE ALL AIR POCKETS. PLACE SECOND LIFT AND REPEAT. CONTINUE TO PUDDLE AND FILL AS NECESSARY.

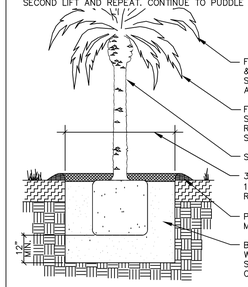

5 PALM TREE PLANTING DETAIL

IF ROOTBALL IS WRAPPED IN NON-BIODEGRADEABLE BURLAP, REMOVE ENTIRE WRAP AFTER IT IS PLACED IN PIT. WHEN BACKFILLING, PLACE PLANTING SOIL IN TWO LIFTS. AFTER FIRST LIFT, PUDDLE SOIL IN WITH WATER TO REMOVE ALL AIR POCKETS. PLACE SECOND LIFT AND REPEAT. CONTINUE TO PUDDLE AND FILL AS NECESSARY.

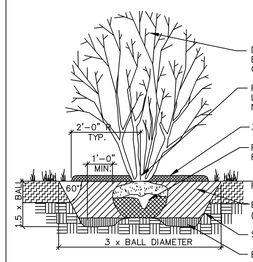

6 MULTI-STEMMED TREE DETAIL

REMOVE ALL CONTAINERS AND BURLAP, TWINE, ROPE AND BASKET. PRUNE ROOTS IF BALL IS ROOTBOUND. WHEN BACKFILLING PLANT PIT, PLACE PLANTING SOIL IN TWO LIFTS. AFTER FIRST LIFT, PUDDLE SOIL IN WITH WATER TO REMOVE ALL AIR POCKETS. PLACE SECOND LIFT AND REPEAT. CONTINUE TO PUDDLE AND FILL AS NECESSARY.

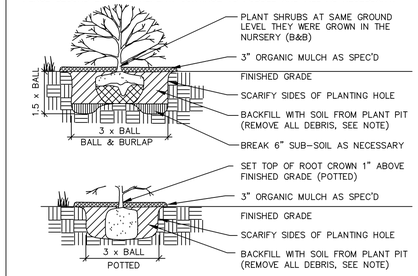

7 SHRUB PLANTING DETAIL

8 GROUNDCOVER PLANTING DETAIL

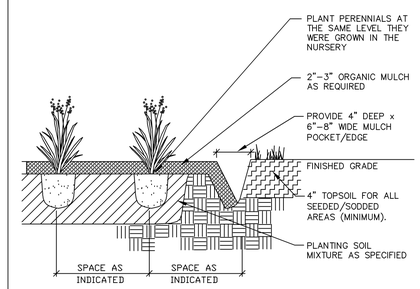

IRRIGATION GENERAL NOTES

I1. PLAN IS DIAGRAMMATIC ONLY. FINAL LOCATION OF LINES AND HEADS SHALL BE DETERMINED IN THE FIELD AND APPROVED BY THE ARCHITECT. LINES SHALL BE IN A COMMON TRENCH WHEREVER POSSIBLE. THE POINT OF CONNECTION SHALL BE AS INDICATED ON THE PLANS.

I2. THE CONTRACTOR SHALL VERIFY EXISTING SITE CONDITIONS AND ENSURE THAT ALL LOCAL CODES ARE MET.

I3. THE CONTRACTOR SHALL APPLY AND PAY FOR ALL PERMITS REQUIRED FOR INSTALLATION OF THE IRRIGATION STSTEM AS DEPICTED IN THESE PLANS.

I4. CONTRACTOR SHALL VERIFY AVAILABLE FLOW AND PRESSURE DOWNSTREAM FROM THE POINT-OF-CONNECTION PRIOR TO SYSTEM INSTALLATION. CONTRACTOR SHALL NOTIFY ARCHITECT IMMEDIATELY IF AVAILABLE FLOW IS LESS THAN REQUIRED TO RUN THE LARGEST ZONE. CONTRACTOR SHALL NOT PROCEED ANY FURTHER WITH INSTALLATION OF THE SYSTEM UNTIL NECESSARY REVISIONS HAVE BEEN DETERMINED BY THE ARCHITECT.

I5. THE CONTRACTOR SHALL NOT WILLFULLY INSTALL THE SPRINKLER SYSTEM AS SHOWN ON THE DRAWINGS WHEN IT IS OBVIOUS IN THE FIELD THAT UNKNOWN OBSTRUCTIONS OR DIFFERENCES IN DIMENSIONS EXIST THAT MIGHT HAVE BEEN UNKNOWN DURING ENGINEERING. SUCH OBSTRUCTIONS SHALL BE BROUGHT TO THE ATTENTION OF THE OWNER'S AUTHORIZED REPRESENTATIVE. IN THE EVENT THIS NOTIFICATION IS NOT PERFORMED, THE CONTRACTOR SHALL ASSUME FULL RESPONSIBILITY FOR ANY REVISIONS NECESSARY AT NO COST TO THE OWNER.

I6. ALL SPRINKLER EQUIPMENT NOT OTHERWISE DETAILED OR SPECIFIED SHALL BE INSTALLED PER MANUFACTURER'S RECOMMENDATIONS AND SPECIFICATIONS.

I7. CONTRACTOR SHALL COORDINATE THE INSTALLATION OF ALL SPRINKLER MATERIALS, INCLUDING PIPE, WITH THE LANDSCAPE DRAWINGS TO AVOID INTERFERING WITH THE PLANTING OF TREES, SHRUBS OR OTHER PLANTS.

I8. IT IS THE INTENT OF THESE DRAWINGS TO INDICATE A COMPLETE IRRIGATION SYSTEM INSTALLED AND READY FOR USE WITHOUT FURTHER COST TO THE OWNER.

I9. ALL VALVES ARE TO BE LOCATED IN PLANTING AREAS WHEREVER POSSIBLE AND IN LOCKABLE VALVE BOXES.

I10. ALL ELECTRICAL WIRE FROM CONTROLLER TO VALVES SHALL BE 12 GAUGE UL DIRECT BURIAL OR LARGER AS REQUIRED BY LENGTH PER MANUFACTURER'S SPECIFICATIONS.

I11. BACKFILL FOR TRENCHING SHALL BE COMPACTED TO A DRY DENSITY EQUAL TO THE UNDISTURBED ADJACENT SOIL AND SHALL CONFORM TO ADJACENT GRADES WITHOUT DIPS, HUMPS, OR OTHER IRREGULARITIES.

I12. A MINIMUM OF TWO WORKING DAYS PRIOR TO PERFORMING ANY DIGGING, CALL SUNSHINE AT 1-800-432-4770 FOR INFORMATION ON THE LOCATION OF NATURAL GAS LINES, ELECTRICAL CABLES, TELEPHONE CABLES, ETC.

I13. CONTRACTOR AGREES THAT, IN ACCORDANCE WITH GENERALLY ACCEPTED CONSTRUCTION PRACTICES, CONTRACTOR WILL BE REQUIRED TO ASSUME SOLE AND COMPLETE RESPONSIBILITY FOR JOB SITE CONDITIONS DURING THE COURSE OF CONSTRUCTION OF THE PROJECT, INCLUDING SAFETY OF ALL PERSONS AND PROPERTY. THIS REQUIREMENT SHALL APPLY CONTINUOUSLY AND SHALL NOT BE LIMITED TO NORMAL WORKING HOURS.

I14. INSTALL PIPE AND CONTROL WIRES IN LANDSCAPE BEDS AND COMMON TRENCHES WHERE POSSIBLE.

I15. INSTALL ALL PIPE AND CONTROL WIRE, WHICH RUNS UNDER PAVING, WITHIN SCH. 40 PVC SLEEVES 2" DIA. MINIMUM SIZE AS REQUIRED TO ALLOW INSTALLATION WITHOUT BINDING. PROVIDE (1) SLEEVE PER PIPE. PROVIDE SEPARATE SLEEVES FOR CONTROL WIRE.

I16. SCHEDULE 40 PVC IS REQUIRED FOR ALL PRESSURE LINES AND UNDER ALL PAVED AREAS. PIPING MUST BE INSTALLED A MIN. OF 12" UNDERGROUND FOR NON PRESSURE IRRIGATION LINES AND 18" UNDERGROUND FOR CONSTANT PRESSURE IRRIGATION LINES.

I17. ALL IRRIGATION MATERIALS AND INSTALLATION SHALL COMPLY WITH THE UNIFORM PLUMBING CODE.

FLUSHING AND TESTING

I18. PIPING SHALL BE COMPLETELY FLUSHED OF FOREIGN PARTICLES BEFORE ATTACHING IRRIGATION COMPONENTS AND DRAIN VALVES.

I19. AFTER FLUSHING, AND WHEN ALL VALVES AND QUICK COUPLERS ARE IN PLACE, ALL MAIN SUPPLY LINES SHALL BE TESTED AT 100 POUNDS PER SQUARE INCH (100 PSI) WITH VALVES CLOSED. MAINTAIN PRESSURE FOR A PERIOD OF NOT LESS THAN (4) CONSECUTIVE HOURS. ALL JOINTS SHOWING LEAKS SHALL BE CLEANED, REMADE AND TESTED.

I20. AFTER FLUSHING, LATERAL PIPES SHALL BE TESTED WITH RISERS CAPPED AND DRAIN VALVES CLOSED. THE TEST SHALL BE MADE AT MAXIMUM OPERATING PRESSURE FOR A PERIOD OF NOT LESS THAN (1) HOUR. ALL JOINTS SHOWING LEAKS SHALL BE CLEANED, REMADE, AND TESTED. ALL TESTING SHALL BE DONE IN THE PRESENCE OF THE OWNER'S REPRESENTATIVE PRIOR TO BACKFILING OVER PIPING.

I21. OPERATIONAL TESTING: PERFORM OPERATIONAL TESTING AFTER HYDROSTATIC TESTING IS COMPLETED. DEMONSTRATE TO THE ARCHITECT THAT THE SYSTEM MEETS COVERAGE REQUIREMENTS (100%) AND THAT AUTOMATIC CONTROLS FUNCTION PROPERLY.

SUBMITTALS

I22. COMPLETE WARRANTY CARDS FOR AUTOMATIC CONTROLLER AND OTHER IRRIGATION MATERIAL (CONTROLLER KEYS, ETC.) SHALL BE DELIVERED TO OWNER.

I23. CONTRACTOR SHALL PREPARE AND ISSUE TO THE OWNER (AT COMPLETION OF THE INSTALLATION) AN ANNUAL CHART INDICATING LOCATION, OPERATING DATES, CYCLES, AND TIME FOR EACH ZONE.

GUARANTEE/FINAL ACCEPTANCE

I24. CONTRACTOR SHALL UNCONDITIONALLY GUARANTEE THE IRRIGATION SYSTEM FOR A PERIOD OF ONE YEAR FROM THE DATE OF FINAL ACCEPTANCE. MANUFACTURER WARRANTIES SHALL ONLY EXCEED THIS GUARANTEE AND CONTRACTOR SHALL BE LIABLE FOR REPAIRS/REPLACEMENT OF FAILED MATERIAL/WORKMANSHIP.

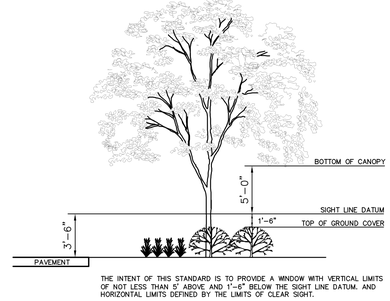

THE INTENT OF THIS STANDARD IS TO PROVIDE A WINDOW WITH VERTICAL LIMITS OF NOT LESS THAN 5' ABOVE AND 1'-6" BELOW THE SIGHT LINE DATUM. AND HORIZONTAL LIMITS DEFINED BY THE LIMITS OF CLEAR SIGHT.

- LANDSCAPE VIEW WINDOW DETAIL

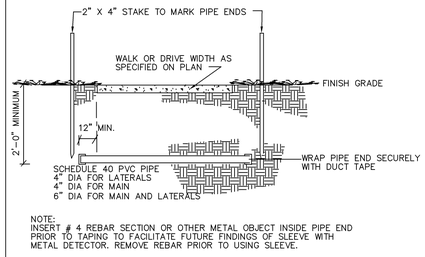

NOTE:
INSERT # 4 REBAR SECTION OR OTHER METAL OBJECT INSIDE PIPE END PRIOR TO TAPING TO FACILITATE FUTURE FINDINGS OF SLEEVE WITH METAL DETECTOR. REMOVE REBAR PRIOR TO USING SLEEVE.

13 SLEEVE UNDER WALK OR ROAD

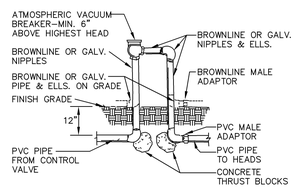

14 ATMOSPHERIC VACUUM BREAKER

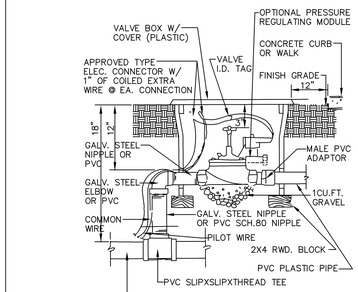

15 REMOTE CONTROL VALVE DETAIL

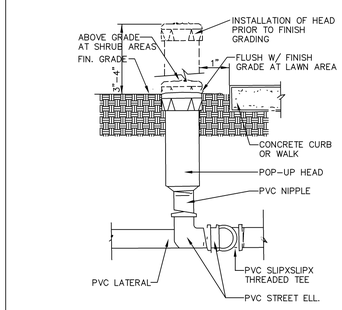

16 4" & 6" POP-UP LAWN/SHRUB HEAD

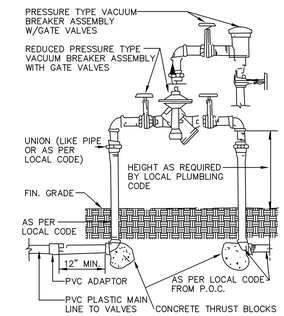

17 RP/PRESSURE TYPE VAC. BREAKER

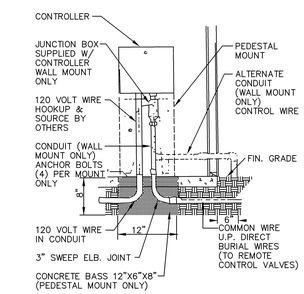

18 CONTROLLER DETAIL

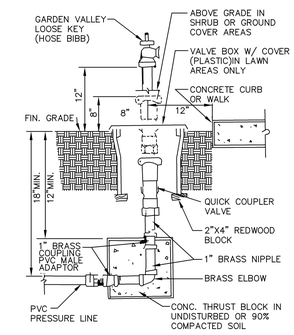

19 QUICK COUPLER /HOSE BIBB DETAIL

THIS DRAWING AND THE DESIGN SHOWN ARE THE PROPERTY OF SPRING ENGINEERING, INC. AND ARE NOT TO BE REPRODUCED, COPIED, PUBLISHED, OR USED IN WHOLE OR PART WITHOUT WRITTEN CONSENT. THEY ARE TO BE USED ONLY FOR THE SITE AND PROJECT IDENTIFIED AND SHALL BE RETURNED UPON REQUEST.

100%
CONSTRUCTION DOCS.
ISSUE DATE: 08.17.15

REVISIONS		
REV	DATE	DESCRIPTION

ROLAND P. DOVE, P.E.
P.E. NO. 36933
DATE

NOT VALID WITHOUT SIGNATURE AND ORIGINAL RAISED SEAL OF A FLORIDA LICENSED ENGINEER

Volkswagen
Of Wesley Chapel
SR 56 And Silver Maple Pkwy
Wesley Chapel, Florida

CONTRACT DATE:
March 10, 2014

SPRING ENGINEERING, INC.
ENGINEERING • LAND PLANNING • ARCHITECTURE
3014 U.S. HWY 19, HOLIDAY, FL (727) 938-1516
FL COA NO. 00005158 & LICENSE NO. AA-C001747

LANDSCAPE DETAILS
DESIGNED BY: JAY
DRAWN BY: JAY
CHECKED BY: RPD
JOB NO.
2013-55
SHEET NO.
C5.1

SECTION 26, TOWNSHIP 26 SOUTH, RANGE 19 EAST
PASCO COUNTY, FLORIDA

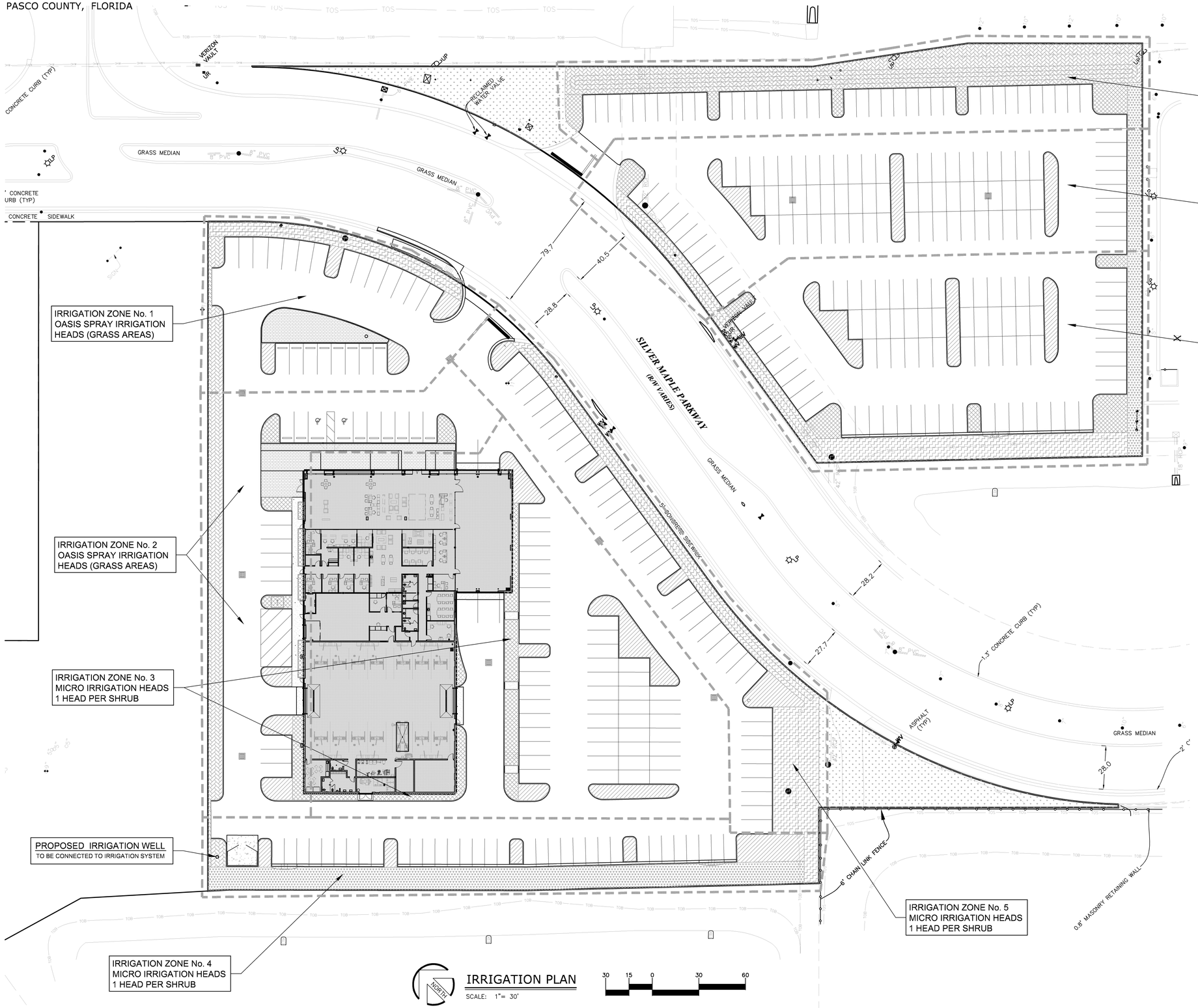

IRRIGATION PLAN

SCALE: 1"= 30'

NOTES

IRRIGATION PLANS ARE DESIGNED TO COMPLY WITH LANDSCAPING AND IRRIGATION ORDINANCE SECTION 15.

TURF AREAS ARE TO BE ON SEPARATE IRRIGATION ZONES FROM OTHER LANDSCAPE PLANT ZONES.

IRRIGATION SPRAYS AND ROTORS ARE NOT TO BE COMBINED ON THE SAME CONTROL VALVE CIRCUIT.

SPRAY AND ROTORS SHALL HAVE MATCHING APPLICATION RATES WITHIN EACH IRRIGATION ZONE.

IRRIGATION SYSTEM SHALL AVOID OVER-SPRAY AND RUNOFF ONTO WALKWAYS, ROADWAYS, STRUCTURES OR OTHER NON-LANDSCAPED AREAS.

FOUR FEET WIDE OR LESS LANDSCAPE ARERAS SHALL CONTAIN MICRO-IRRIGATION ONLY.

SPRINKLER SPACING SHALL NOT EXCEED 55% OF THE SPRINKLER'S DIAMETER OF COVERAGE.

IRRIGATION CONTROL EQUIPMENT SHALL CONTAIN AN AUTOMATIC IRRIGATION CONTROLLER WITH PROGRAM FLEXIBILITY. AUTOMATIC IRRIGATION CONTROLLER SHALL CONTAIN A BATTERY BACK-UP TO RETAIN IRRIGATION PROGRAMS.

AN OPERABLE RAIN SENSOR DEVICE SHALL BE PROVIDED AND BE EXPOSED TO UNOBSTRUCTED RAINFALL.

IRRIGATION SYSTEM IS TO BE CONNECTED TO PROPOSED ON-SITE IRRIGATION WELL.

THIS DRAWING AND THE DESIGN SHOWN ARE THE PROPERTY OF SPRING ENGINEERING, INC. AND ARE NOT TO BE REPRODUCED, COPIED, PUBLISHED, OR USED IN WHOLE OR PART WITHOUT WRITTEN CONSENT. THEY ARE TO BE USED ONLY FOR THE SITE AND PROJECT IDENTIFIED AND SHALL BE RETURNED UPON REQUEST.

100%
CONSTRUCTION DOCS.
ISSUE DATE: 08.17.15

REVISIONS

REV	DATE	DESCRIPTION

ROLAND P. DOVE, P.E.
P.E. NO. 36933
DATE

Volkswagen
Of Wesley Chapel
SR 56 And Silver Maple Pkwy
Wesley Chapel, Florida

CONTRACT DATE:
March 10, 2014

SPRING ENGINEERING, INC.
ENGINEERING • LAND PLANNING • ARCHITECTURE
3014 U.S. HWY 19, HOLIDAY, FL (727) 938-1516
FL COA NO. 00005158 & LICENSE NO. AR-C001747

IRRIGATION PLAN

DESIGNED BY: JAY
DRAWN BY: JAY
CHECKED BY: RPD
JOB NO.
2013-55

SHEET NO.
C6.0

TESTING SCHEDULE GUIDE

ITEM	TEST TYPE	TEST I.D.	REQUIREMENTS	FREQUENCY
EMBANKMENT	MAXIMUM DENSITY OPTIMUM MOISTURE FIELD DENSITY	AASHTO T180 ASTM D1557 AASHTO T191, T204, T238 ASTM D1556, D2937, D2922	N/A 95% OF MAXIMUM DENSITY	PER SOIL TYPE ONE PER 2,500 S.F. HORIZONTALLY * ALTERNATING LIFTS (12")
UTILITY TRENCH BACKFILL UNDER ROADWAYS AND STRUCTURES	MAXIMUM DENSITY OPTIMUM MOISTURE FIELD DENSITY	AASHTO T180 ASTM D1557 AASHTO T191, T204, T238 ASTM D1556, D2937, D2922	N/A 95% OF MAXIMUM DENSITY	PER SOIL TYPE ONE PER 2,500 S.F. HORIZONTALLY * EVERY 2' VERTICALLY D2922 – AT LEAST ONE FOR EACH PIPE RUN
BACKFILL OF STRUCTURES	MAXIMUM DENSITY OPTIMUM MOISTURE FIELD DENSITY	AASHTO T180 ASTM D1557 AASHTO T191, T204, T238 ASTM D1556, D2937, D2922	N/A 95% OF MAXIMUM DENSITY	PER SOIL TYPE ONE PER 2,500 S.F. EVERY 2' VERTICALLY
SUBGRADE	BEARING VALUES MAXIMUM DENSITY OPTIMUM MOISTURE FIELD DENSITY & THICKNESS	LBR – FLA. D.O.T. AASHTO T180 ASTM D1557 AASHTO T191, T238 ASTM D1556, D2922	LBR = 40 MIN. N/A 98% OF MAXIMUM DENSITY	ONE PER SOIL TYPE CHECK POINT LBR AT 500 L.F. HORIZONTALLY ONE PER SOIL TYPE ONE PER 2,500 S.F. HORIZONTALLY
BASE	BEARING VALUES MAXIMUM DENSITY OPTIMUM MOISTURE THICKNESS FIELD DENSITY GRADATION ATTERBURG LIMITS	LBR – FLA. D.O.T. AASHTO T180 ASTM D1557 AASHTO T191, T238 ASTM D1556, D2922 AASHTO T27, T98 AASHTO T90 ASTM C136, D423, D424	LBR = 100 MIN. N/A 98% OF MAXIMUM DENSITY PER SPECIFICATIONS	ONE PER SOURCE OR AS MATERIAL CHANGES CHECK POINT LBR AT 500 L.F. HORIZONTALLY ONE PER SOURCE ONE PER 2,500 S.F. HORIZONTALLY ONE PER SOURCE
SOIL CEMENT BASE MIX DESIGN (TO BE USED IF SEPARATION BETWEEN SHWT AND BOTTOM OF BASE IS < 1.5')	PORTLAND CEMENT ASSOC. SPECIFICATIONS MAXIMUM DENSITY OPTIMUM MOISTURE COMPRESSIVE STRENGTH SPECIMENS TEST CORES FIELD DENSITY & THICKNESS	 AASHTO T134 (STANDARD) PORTLAND CEMENT ASSOC. SPECIFICATIONS PORTLAND CEMENT ASSOC. SPECIFICATIONS AASHTO T191, T238 ASTM D1556, D2922	PER SPECIFICATIONS N/A 300 PSI AT 7–DAYS TYPE DAILY ** 450 PSI AT 21–DAYS SET OF 3 COMPRESSIVE ** 95% OF MAXIMUM DENSITY	ONE PER SOIL TYPE ONE PER SOIL TYPE DAILY ONE SET OF 3 PER SOIL TYPE ONE SET OF 3 PER SOIL TYPE ONE PER 2,500 S.F. HORIZONTALLY
ASPHALTIC CONCRETE	MATERIALS QUALITY BITUMEN CONTENT GRADATION FIELD DENSITY COMPACTION LOS ANGELES ABRASION THICKNESS	AASHTO T164 ASTM D2172 ASTM D2950–81 AASHTO T96–77 ASTM C131–81 N/A	 PER SPECIFICATIONS 95% OF LAB DENSITY 95% OF MARSHALL MAXIMUM UNIT PER SPECIFICATIONS PER SPECIFICATIONS	 ONE PER DAY ONE PER 2,500 S.F. HORIZONTALLY ONE PER SOURCE ONE PER 2,500 S.F.

NOTES:
* THE CONTRACTOR SHALL NOT PAVE OVER SOIL CEMENT BASE UNTIL A 30–DAY CURING HAS ELAPSED.
** MAXIMUM STRENGTH LIMITS, AS ESTABLISHED BY SOILS TESTING COMPANY, SHALL NOT BE EXCEEDED.
*** SHOULD ANY OF THE INFORMATION PROVIDED HEREIN CONFLICT WITH EITHER THE RECOMMENDATION OF THE GEOTECHNICAL ENGINEER, AND/OR THE GEOTECHNICAL REPORT, THEN THE AFOREMENTED RECOMMENDATIONS WILL SUPERCEDE THIS "TESTING SCHEDULE GUIDE".

GENERAL NOTES

A. THE LOCATIONS, ELEVATIONS AND DIMENSIONS OF EXISTING UTILITIES, STRUCTURES AND OTHER FEATURES ARE SHOWN ACCORDING TO THE BEST INFORMATION AVAILABLE AT THE TIME OF THE PREPARATION OF THESE PLANS BUT DO NOT PURPORT TO BE ABSOLUTELY CORRECT. THE CONTRACTOR SHALL FIELD VERIFY THE LOCATIONS, ELEVATIONS AND DIMENSIONS OF ALL EXISTING UTILITIES, STRUCTURES AND OTHER FEATURES AFFECTING HIS WORK PRIOR TO BIDDING AND DETERMINE THE EXACT LOCATION OF THE UTILITIES PRIOR TO CONSTRUCTION. THE CONTRACTOR SHALL NOTIFY SUNSHINE @ (800)432–4770 AND THE UTILITY COMPANIES IN THE AREA AT LEAST 48 HOURS BEFORE COMMENCING WORK. REPAIR AND REPLACEMENT OF ALL PRIVATE AND PUBLIC PROPERTY AFFECTED BY THIS WORK SHALL BE RESTORED TO A CONDITION EQUAL TO OR BETTER THAN EXISTED BEFORE COMMENCING CONSTRUCTION UNLESS SPECIFICALLY EXEMPTED BY THE PLANS. COST TO BE INCIDENTAL TO OTHER CONSTRUCTION AND NO EXTRA COMPENSATION TO BE ALLOWED.

B. ALL WORK SHALL BE LEFT IN SUCH A MANNER THAT IT IS SAFE TO THE PUBLIC. THE CONTRACTOR SHALL MAINTAIN TRAFFIC AT ALL TIMES. SIGNS AND BARRICADES TO BE ACCORDING TO F.D.O.T. MANUAL OF SAFE PRACTICES; REFERENCE F.D.O.T. INDEXES 600 THROUGH 650 AND 17349 PER ROADWAY AND TRAFFIC DESIGN STANDARDS LATEST EDITION OF D.O. INDEXES 100 THROUGH 116. THERE WILL BE NO ON–SITE BURNING.

C. ADDITIONAL CONTROL AND SCOPE OF WORK: THE CONTRACTOR SHALL PROVIDE SPRING ENGINEERING, INC. WITH AS–BUILT DRAWINGS AND SURVEYS UPON COMPLETION OF ALL WORK.

D. A SURVEYOR SHALL DO ALL BUILDING LAYOUT, CURB & ROADWAY, AND GRADE STAKING. THE CONTRACTOR SHALL VERIFY ALL DIMENSIONS IN THE FIELD AND REPORT ANY DISCREPANCIES TO THE ENGINEER PRIOR TO STARTING ANY WORK. THE CONTRACTOR SHALL CONTACT THE ENGINEER'S OFFICE IMMEDIATELY ON ANY CONFLICTS ARISING DURING CONSTRUCTION OF ANY IMPROVEMENTS SHOWN ON THESE DRAWNGS. IT SHALL BE THE CONTRACTOR'S RESPONSIBILITY TO CONSULT WITH THE ENGINEER FOR MAKING ANY AND ALL REQUIRED INTERPRETATIONS OF THE PLANS; HOWEVER, THIS IN NO WAY RELIEVES THE CONTRACTOR OF HIS RESPONSIBILITY FOR CONSTRUCTING THE PROJECT TO ACCOMPLISH THE INTENT OF THE PLANS. ALL ELEVATIONS REFER TO NATIONAL GEODETIC VERTICAL DATUM OF 1929. MEAN SEA LEVEL = 0.00.

E. PERMITS: NO CONSTRUCTION SHALL COMMENCE UNTIL ALL APPLICABLE PERMITS HAVE BEEN APPROVED. A RIGHT–OF–WAY USE PERMIT IS REQUIRED PRIOR TO THE COMMENCEMENT OF ANY CONSTRUCTION ACTIVITY WITHIN THE RIGHT–OF–WAY, AND NO IRRIGATION SYSTEM OR LANDSCAPING SHALL BE INSTALLED IN ANY PUBLIC RIGHT–OF–WAY WITHOUT ISSUANCE OF APPROPRIATE PERMIT. ALL PROPOSED SIGNS MUST BE APPLIED FOR, APPROVED AND PERMITTED ON AN INDIVIDUAL BASIS APART FROM ANY ULTIMATELY APPROVED SITE PLAN; APPROVAL OF THIS SITE PLAN DOES NOT CONSTITUTE APPROVAL OF ANY SIGN.

F. STRIPING: HANDICAPPED PARKING SPACES WILL BE PROPERLY SIGNED AND STRIPED IN ACCORDANCE WITH FLORIDA STATUTE 316, THE MANUAL ON UNIFORM TRAFFIC CONTROL DEVICES, OR OTHER APPLICABLE STANDARDS. ALL ON–SITE PARKING SPACES SHALL BE STRIPED AND SIGNED IN ACCORDANCE WITH THE MANUAL ON UNIFORM TRAFFIC CONTROL DEVICES, LATEST EDITION. PARKING SPACES, DIRECTIONAL ARROWS, AND STOP BARS SHALL BE STRIPED IN WHITE. IT SHALL BE THE OWNER/DEVELOPER'S RESPONSIBILITY TO PROPERLY SIGN AND STRIPE THE SITE IN ACCORDANCE WITH APPLICABLE STANDARDS.

G. CONCRETE: CONCRETE SHALL HAVE A COMPRESSIVE STRENGTH OF 3,000 PSI AT 28 DAYS. PORTLAND CEMENT SHALL CONFORM TO ASTM C150. AGGREGATE SHALL CONFORM TO ASTM C33. WIRE FABRIC SHALL CONFORM TO ASTM A185. READY MIXED CONCRETE SHALL CONFORM TO ASTM C–94. SIX INCH MESH, 10 GAUGE WIRE FABRIC SHALL BE USED IN SLABS THICKER THAN FOUR INCHES. STANDARD THICKNESS SHALL BE FOUR INCHES, EXCEPT AT DRIVEWAYS WHERE THE THICKNESS SHALL BE SIX INCHES. SURFACES SHALL BE FREE FROM TROWEL OR MACHINE MARKS. SURFACE VARIATIONS SHALL NOT EXCEED 1/4 INCH UNDER A 10 FOOT STRAIGHTEDGE. EDGE OF SLABS SHALL HAVE A SMOOTH FINISH. SIDEWALKS SHALL HAVE A BROOM FINISH.

H. UTILITIES: ALL UNDERGROUND UTILITIES MUST BE INSTALLED BEFORE BASE AND SURFACE COURSES ARE CONSTRUCTED. SITE CONTRACTOR IS RESPONSIBLE FOR INSTALLING ALL UTILITIES IN ACCORDANCE WITH LOCAL CODES, WHETHER INDICATED ON THE PLANS OR NOT. CHECK WITH THE LOCAL GOVERNMENT PRIOR TO BID SUBMISSION. THE CONTRACTOR SHALL TAKE ALL NECESSARY MEASURES TO MINIMIZE INTERRUPTIONS OF EXISTING UTILITY SERVICE DURING CONSTRUCTION AND CONNECTION OF PROPOSED SERVICE LINES. CONFLICTS BETWEEN WATER LINES AND STORM/SANITARY SEWER SYSTEMS ARE TO BE RESOLVED BY ADJUSTING WATER LINES AS NECESSARY. CONTRACTOR SHALL MAINTAIN A MINIMUM OF TEN FOOT (10') HORIZONTAL SEPARATION OR 18" VERTICAL SEPARATION WHERE UNDERGROUND SERVICES CONFLICT. PIPE MEASUREMENTS ARE TO CENTER OF STRUCTURES AND ALL LENGTHS ARE PLUS OR MINUS.

I. WATERMAINS: ALL NEW WATERMAINS, PIPES, FITTINGS, VALVES, PACKING AND JOINTING MATERIALS SHALL CONFORM WITH ALL APPLICABLE AWWA STANDARDS AND THE STATE PLUMBING CODE AND SHALL BE INSTALLED IN ACCORDANCE WITH APPLICABLE AWWA STANDARDS AND/OR THE MANUFACTURER'S RECOMMENDED PROCEDURES. ALL WATER MAIN PIPES AND FITTINGS SHALL CONTAIN NO MORE THAN EIGHT PERCENT LEAD. ALL STONES FOUND IN WATER MAIN TRENCHES SHALL BE REMOVED TO A DEPTH OF AT LEAST SIX INCHES BELOW THE BOTTOM OF THE PIPE. CONTINUOUS AND UNIFORM BEDDING TO BE PROVIDED AND BACKFILL MATERIAL SHALL BE TAMPED IN LAYERS AROUND THE PIPE AND FITTINGS AND TWELVE INCHES (12") ABOVE THE TOP OF THE PIPE TO ADEQUATELY SUPPORT AND PROTECT THE PIPE. ALL NEW WATER MAINS SHALL BE PRESSURE AND LEAK TESTED PER AWWA STANDARD C600 AND DISINFECTED PER AWWA STANDARD C651 AND RULE 62.555.345,F.A.C. ALL FOUR INCH (4") AND LARGER WATER MAINS TO BE C–900 P.V.C. AND ALL WATER MAINS SMALLER THAN 4" TO BE SCHEDULE 40 P.V.C. WATER MAIN TO BE 2.5' (MIN.) BELOW PROPOSED GRADE.

J. SANITARY SEWERS: ALL SANITARY SEWER MAINS TO BE SDR–35 PVC.

K. TREE BARRICADES AND EROSION CONTROL: ALL EROSION CONTROL MEASURES (SILT BARRIERS) AND TREE BARRICADES MUST BE INSTALLED PRIOR TO THE START OF CONSTRUCTION AND REMAIN IN PLACE THROUGHOUT CONSTRUCTION. ENCROACHMENT OR FAILURE TO MAINTAIN THESE BARRICADES COULD RESULT IN ENFORCEMENT ACTION WHICH MAY INCLUDE CITATIONS AND/OR PERMIT REVOCATION. SILTATION BARRIERS SHALL BE MAINTAINED AND REPAIRED AT THE END OF EACH WORKING DAY. HAY BALES SHALL BE INSTALLED ONCE PERIMETER GRADING IS COMPLETED. STORMWATER FACILITIES SHALL HAVE HAY BALES PLACED AROUND THEIR ENTRANCES TO PREVENT SEDIMENT FROM BEING TRANSPORTED INTO THE STORMWATER SYSTEM. HAY BALES SHALL BE PLACED ALONG THE PERIMETER OF ALL DOWNSTREAM BOUNDARIES TO PROVIDE FILTRATION OF RUNOFF DURING CONSTRUCTION. THE HAY BALES SHALL REMAIN IN PLACE UNTIL THE ENGINEER HAS APPROVED THE VEGETATIVE COVER ALONG EMBANKMENTS PROVIDING RUNOFF TO THE PERIMETER. IT IS THE CONTRACTOR'S RESPONSIBILITY TO MAINTAIN SOIL EROSION CONTROL DEVICES. IF AT ANY TIME DRAINAGE STRUCTURES OR EROSION CONTROL DEVICES BECOME DAMAGED OR INOPERABLE, IT IS THE CONTRACTORS RESPONSIBILITY TO REPAIR THEM. THE CONTRACTOR IS EXPECTED, AT THE END OF EACH DAY, TO HAVE THE SITE GRADED IN SUCH A WAY THAT ADJACENT PROPERTIES ARE NOT ADVERSELY IMPACTED BY EROSION OR SEDIMENT LEAVING THE SITE. CLEARED AREAS SHALL BE STABILIZED EARLY IN THE CONSTRUCTION PROCESS AND IF NATURAL PRECIPITATION DOES NOT PROVIDE PERIODIC WETTING OF THE SITE, THEN THE CONTRACTOR SHALL PROVIDE A METHOD OF SPRAYING THE SITE TO PREVENT WIND EROSION. CONTRACTOR SHALL CLEAR ONLY THAT AREA SHOWN TO BE CLEARED ON THE PLAN. CARE SHALL BE TAKEN TO DISTURB THE EXISTING VEGETATION IN ONLY THOSE AREAS UNDER CONSTRUCTION AT THAT TIME. ALL CLEAR SITE AREAS SHALL BE KEPT FREE OF ANY SIGNAGE, PLANTINGS, TREES, ETC. IN EXCESS OF THREE–AND–A–HALF (3 1/2) FEET IN HEIGHT. DURING LAND ALTERATION AND CONSTRUCTION ACTIVITIES, IT SHALL BE UNLAWFUL TO REMOVE VEGETATION BY GRUBBING OR TO PLACE SOIL DEPOSITS, DEBRIS, SOLVENTS, CONSTRUCTION MATERIAL, MACHINERY OR OTHER EQUIPMENT OF ANY KIND WITHIN THE DRIPLINE OF A TREE TO REMAIN ON THE SITE UNLESS OTHERWISE APPROVED BY THE LOCAL GOVERNMENT. ALL TREE ROOTS EXISTING WITHIN APPROVED IMPROVEMENT AREAS AND ORIGINATING FROM A PROTECTED TREE SHALL BE SEVERED CLEAN AT THE LIMITS OF THE PRESERVED AREA. ALL TRIMMING UNDERTAKEN ON A TREE PROTECTED BY THE PROVISIONS OF THE LAND DEVELOPMENT CODE SHALL BE PERFORMED IN ACCORDANCE WITH THE NATIONAL ARBORIST ASSOCIATION (NAA) PRUNING STANDARDS.

L. GRADING AND BACKFILL: THE GRADING SHOWN ON THESE PLANS IS INTENDED TO EXPRESS THE GENERAL GRADING INTENT OF THE PROJECT. THE CONTRACTOR IS EXPECTED TO GRADE THE ENTIRE SITE TO PROVIDE POSITIVE DRAINAGE IN ALL AREAS THROUGHOUT THE SITE. SMOOTH TRANSITIONS SHALL BE PROVIDED BETWEEN CONTOURS OR SPOT ELEVATIONS AS SHOWN ON THE PLANS TO ACCOMPLISH THE GRADING INTENT. ALL SLOPES SHALL BE STABILIZED IMMEDIATELY AFTER FINAL GRADING HAS BEEN COMPLETED. CONTRACTOR TO GRADE PROPERTY SO THAT GRADING MEETS ADJACENT PROPERTY AND RIGHT – OF – WAY ELEVATIONS. CONTRACTOR SHALL NOTIFY THE OWNER AND SEI PRIOR TO DEMOBILIZATION OF GRADING EQUIPMENT TO DETERMINE THAT THE GRADING INTENT HAS BEEN ACHIEVED. ALL FILL MATERIAL SHALL BE SOIL OR SOIL–ROCK MIXTURE WHICH IS FREE FROM ORGANIC MATTER AND OTHER DELETERIOUS SUBSTANCE. IT SHALL BE PREDOMINATELY GRANULAR WITH A MAXIMUM PARTICLE SIZE OF TWO INCHES AND A PLASTICITY INDEX OF 12 OR LESS. ALL BACKFILL WITHIN THE ROADWAY, OVER ANY PIPE THAT IS TO BE INSTALLED UNDER THE ROADWAY OR WITHIN EMBANKMENTS, ETC. IS TO BE COMPACTED TO 100% OF MAXIMUM DENSITY AS DETERMINED BY AASHTO AND PER F.D.O.T. SPECIFICATIONS, SECTION 125.8.3, LATEST EDITION.

M. DRAINAGE: ALL DRAINAGE STRUCTURES MUST BE CONSTRUCTED PER FLORIDA DEPARTMENT OF TRANSPORTATION ROAD DESIGN STANDARDS. MITERED END SECTION AS PER D.O.T. INDEX NO. 272 AND NO. 273. ALL PIPE LENGTHS ARE PLUS OR MINUS AND MEASUREMENTS ARE TO THE CENTER OF STRUCTURES. OWNER SHALL MAINTAIN RETENTION AREAS.

N. DRIVES: ALL DRIVES SHALL BE IN ACCORDANCE WITH FDOT REQUIREMENTS.

O. PAVING: ALL PAVING SURFACES IN INTERSECTIONS AND ADJACENT SECTIONS SHALL BE GRADED TO DRAIN POSITIVELY IN THE DIRECTION SHOWN BY THE FLOW ARROWS ON THE PLANS AND TO PROVIDE A SMOOTH TRANSITION WITH NO BREAKS IN GRADE AND NO STEEP OR REVERSE CROSS SLOPES. AT APPROACHES TO AND INTERSECTIONS WITH EXISTING GRADES, IT MAY BE NECESSARY AND ADVISABLE TO MAKE MINOR LOCAL FIELD ADJUSTMENTS TO ACCOMPLISH THE PURPOSES OUTLINED. IT IS THE CONTRACTORS RESPONSIBILITY TO ENSURE POSITIVE DRAINAGE AND SEI SHALL BE CONSULTED SO THAT WE MAY MAKE ANY AND ALL REQUIRED INTERPRETATIONS OF THE PLANS OR GIVE SUPPLEMENTARY INSTRUCTIONS TO ACCOMPLISH THE INTENT OF THE PLANS. ASPHALTIC CONCRETE TYPE S–1, SHALL CONFORM TO THE FLORIDA DEPARTMENT OF TRANSPORTATION STANDARD SPECIFICATIONS FOR ROAD AND BRIDGE CONSTRUCTION LATEST EDITION, FOR MATERIALS AND METHOD OF CONSTRUCTION. ALL ROADWAY BASES SHALL BE PRIMED AND, IF REQUIRED, A TACK COAT SHALL BE APPLIED. ALL MATERIALS AND CONSTRUCTION METHODS SHALL CONFORM TO THE FLORIDA DEPARTMENT OF TRANSPORTATION STANDARD SPECIFICATIONS FOR ROAD AND BRIDGE CONSTRUCTION, LATEST EDITION. TEST REPORTS FOR SUBGRADE, BASE, ASPHALT AND BASE CORE AND CONCRETE SHALL BE SUBMITTED TO THE ENGINEER OF RECORD FOR REVIEW AND APPROVAL. SEE SPECIFICATIONS FOR SPECIFIC TESTING REQUIREMENTS.

P. LANDSCAPING: ALL PLANT MATERIALS USED SHALL CONFORM TO THE STANDARDS FOR FLORIDA NO. 1 OR BETTER AS GIVEN IN GRADES AND STANDARDS FOR NURSERY PLANTS, PART I, 1963 AND PART II, STATE OF FLORIDA DEPT. OF AGRICULTURE, TALLAHASSEE. ALL PLANT MATERIAL WILL BE GUARANTEED FOR ONE (1) YEAR FROM DATE OF FINAL ACCEPTANCE BY ARCHITECT. PLANTS AND TREES ARE LOCATED BY SCALING OFF PLANS. INSTALLER SHALL INSPECT SITE PRIOR TO BEGINNING PLANTING OPERATIONS AND NOTIFY ARCHITECT OF ANY DISCREPANCIES. INSTALLER SHALL IMMEDIATELY NOTIFY ARCHITECT IF ANY CONFLICTS OCCUR BETWEEN PROPOSED LOCATION OF TREES CALLED FOR ON THE PLANS AND ANY UNDERGROUND UTILITIES OR SUBSURFACE STRUCTURES. INSTALLER SHALL NOTIFY ARCHITECT OF ANY CONDITION THAT WOULD PREVENT THE HEALTHY GROWTH OF PLANT SPECIES CALLED FOR ON THESE PLANS PRIOR TO CONTRACT AWARD. ALL LANDSCAPE AREAS AND GRADED SWALES ARE TO BE SODDED WITH FLORATAM UNLESS NOTED OTHERWISE. THE GROUND IS TO BE PROPERLY PREPARED AND FERTILIZED PRIOR TO LAYING SOD. THERE SHALL BE A CRISP LINE SEPARATING PLANT BEDS FROM ALL SOD AREAS. SOD TO BE STAKED AS NECESSARY TO PREVENT EROSION. CONTRACTOR TO SOD ALL DISTURBED AREAS DUE TO PROPOSED CONSTRUCTION.

Q. PLANTING SOILS: ALL PLANTING PITS SHALL BE BACKFILLED WITH TOPSOIL MIX CONSISTING OR FIFTY (50) PERCENT SAND, FORTY (40) PERCENT MUCK AND TEN (10) PERCENT HUMUS OR PEAT, BY VOLUME, WELL MIXED WITH APPROPRIATE FERTILIZER ADDED.

R. MULCH: ALL EXPOSED AREAS IN PLANTING BEDS, INCLUDING HEDGE ROWS, SHALL BE KEPT WEED FREE AND MULCHED TO A MINIMUM OF THREE (3) INCHES DEPTH, EXCEPT THAT TWO (2) INCHES SHALL BE REQUIRED IN ANNUAL BEDS. MULCH SHALL BE REPLENISHED, AS NEEDED, TO MEET THIS REQUIREMENT.

SEPARATION FOR WATER/SEWER CONFLICTS

1. SANITARY SEWERS, FORCE MAINS AND STORM SEWERS SHOULD ALWAYS CROSS UNDER WATER MAINS. SANITARY SEWERS, FORCE MAINS AND STORM SEWERS CROSSING WATER MAINS SHALL BE LAID TO PROVIDE A MINIMUM VERTICAL DISTANCE OF 18 INCHES BETWEEN THE INVERT OF THE UPPER PIPE AND THE CROWN OF THE LOWER PIPE WHENEVER POSSIBLE.

   WHERE SANITARY SEWERS, FORCE MAINS AND STORM SEWERS MUST CROSS A WATER MAIN WITH LESS THAN 18 INCHES VERTICAL DISTANCE, BOTH THE SEWER AND THE WATER MAIN SHALL BE CONSTRUCTED OF DUCTILE IRON PIPE (DIP) AT THE CROSSING. SUFFICIENT LENGTHS OF DIP MUST BE USED TO PROVIDE A MINIMUM SEPARATION OF 10 FEET BETWEEN ANY TWO JOINTS. ALL JOINTS ON THE WATER MAIN WITHIN 20 FEET OF THE CROSSING MUST BE LEAK FREE AND MECHANICALLY RESTRAINED. A MINIMUM VERTICAL CLEARANCE OF 6 INCHES MUST BE MAINTAINED AT THE CROSSING.

   WHERE THERE IS NO ALTERNATIVE TO SEWER PIPES CROSSING OVER THE WATER MAIN, THE CRITERIA FOR MINIMUM SEPARATION OF 18 INCHES BETWEEN LINES AND 10 FEET BETWEEN JOINTS SHALL BE REQUIRED.

   ALL CROSSINGS SHALL BE ARRANGED SO THAT THE SEWER PIPE JOINTS AND THE WATER MAIN PIPE JOINTS ARE EQUIDISTANT FROM THE POINT OF CROSSING (PIPES CENTERED ON THE CROSSING).

   WHERE A NEW PIPE CONFLICTS WITH AN EXISTING PIPE, THE NEW PIPE SHALL BE CONSTRUCTED OF DIP AND THE CROSSING SHALL BE ARRANGED TO MEET THE REQUIREMENTS ABOVE.

2. A MINIMUM 10 FOOT HORIZONTAL SEPARATION SHALL BE MAINTAINED BETWEEN ANY TYPE OF SEWER & WATER MAIN IN PARALLEL INSTALLATION WHENEVER POSSIBLE.

   IN CASES WHERE IT IS NOT POSSIBLE TO MAINTAIN 10 FOOT HORIZONTAL SEPARATION THE WATER MAIN MUST BE LAID IN A SEPARATE TRENCH OR ON AN UNDISTURBED EARTH SHELF LOCATED ON ONE SIDE OF THE SEWER OR FORCE MAIN AT SUCH AN ELEVATION THAT THE BOTTOM OF THE WATER MAIN IS AT LEAST 18 INCHES ABOVE THE TOP OF THE SEWER.

   WHERE IT IS NOT POSSIBLE TO MAINTAIN A VERTICAL DISTANCE OF 18 INCHES IN PARALLEL INSTALLATIONS THE WATER MAIN SHALL BE CONSTRUCTED OF DIP AND THE SEWER OR THE FORCE MAIN SHALL BE CONSTRUCTED OF DIP WITH A MINIMUM VERTICAL DISTANCE OF 6 INCHES. THE WATER MAIN SHOULD ALWAYS BE ABOVE THE SEWER. JOINTS ON THE WATER MAIN SHALL BE LOCATED AS FAR APART AS POSSIBLE FROM JOINTS ON THE SEWER OR FORCE MAIN (STAGGERED JOINTS).

3. ALL DIP SHALL BE CLASS 50 OR HIGHER. ADEQUATE PROTECTIVE MEASURES AGAINST CORROSION SHALL BE AS REQUIRED BY THE PERMITTING UTILITIES DEPARTMENT.

PASCO COUNTY NOTES

1. All utility construction shall comply with the Pasco County Standards for Design and Construction of Water and Wastewater Facilities Specifications, latest edition.
2. All on–site water and sewer facilities shall be owned and maintained by the owner–developer.
3. Installation of fuel storage tanks requires review and approval by the Fire Marshal and the issuance of a separate building permit. Approval of the site plan does not constitute approval of the location of the fuel tanks.
4. All proposed signs must be applied for, approved, and permitted on an individual basis apart from any ultimately–approved site plan. Approval of this site plan does not constitute approval of any sign age.
5. Handicap parking spaces will be properly signed and striped in accordance with Florida Statute 316, the Manual on Uniform Traffic Control Devices, or other applicable standards.
6. The architect–engineer certifies that the site has been designed in accordance with the Americans with Disabilities Act.
7. All on–site parking spaces will be striped and signed in accordance with the manual on Uniform Traffic Control Devices, latest edition. Parking spaces, directional arrows, and stop bars shall be striped in WHITE. It shall be the owner/developers' responsibility to properly sign and stripe the site in accordance with applicable standards.
8. The owner/developer acknowledges that this approval does not include any work in County right–of–way. All right–of–way work shall be a function of an approved Pasco County Right–of–Way Use Permit.
9. All clear–site areas shall be kept free of any sign age, plantings, trees, etc. in excess of three–and–a–half (3¼) feet in height.
10. No irrigation system or landscaping shall be installed in any County or State right–of–way without issuance of appropriate right–of–way Use Permit.
11. The owner/developer acknowledges that the site and its subsequent building permits shall comply with all rezoning/MPUD/PUD conditions.
12. All structures, including buffer walls, retaining walls, sign age, etc. require separate building permits.

THIS DRAWING AND THE DESIGN SHOWN ARE THE PROPERTY OF SPRING ENGINEERING, INC. AND ARE NOT TO BE REPRODUCED, COPIED, PUBLISHED, OR USED IN WHOLE OR PART WITHOUT WRITTEN CONSENT. THEY ARE TO BE USED ONLY FOR THE SITE AND PROJECT IDENTIFIED AND SHALL BE RETURNED UPON REQUEST.

100%
CONSTRUCTION DOCS.
ISSUE DATE: 08.17.15

REV	DATE	DESCRIPTION

REVISIONS

ROLAND P. DOVE, P.E.
P.E. NO. 36933
DATE

NOT VALID WITHOUT SIGNATURE AND ORIGINAL RAISED SEAL OF A FLORIDA LICENSED ENGINEER

Volkswagen
Of Wesley Chapel
SR 56 And Silver Maple Pkwy
Wesley Chapel, Florida

CONTRACT DATE:
March 10, 2014

SPRING ENGINEERING, INC.
ENGINEERING • LAND PLANNING • ARCHITECTURE
3014 U.S. HWY 19, HOLIDAY, FL (727) 938–1516
FL COA NO. 00005158 & LICENSE NO. AA–C001747

GENERAL NOTES

DESIGNED BY: JAY
DRAWN BY: JAY
CHECKED BY: RPD
JOB NO. 2013-55

SHEET NO.
C7.0