SIMULTANEOUS SUBMITTAL FOR

McDONALD'S - L/C: 009-2596

McDONALD'S RESTAURANT

11929 US HIGHWAY 19

PORT RICHEY, PASCO COUNTY, FLORIDA

McDONALD'S RESTAURANT
A PORTION OF TRACT 1, PORT RICHEY LAND COMPANY
AS RECORDED IN PLAT BOOK 1, PAGE 61, OF THE PUBLIC RECORDS
OF PASCO COUNTY, FLORIDA IN SECTION 9, TOWNSHIP 25 SOUTH, RANGE 16 EAST
CONTAINING 45,996 SF OR 1.06 ACRES, MORE OR LESS
PASCO COUNTY PARCEL I.D. #:
09-25-16-0010-00100-0030

LAND OWNER:
G&G ENTERPRISES OF PORT RICHEY INC
13176 TAFT STREET
BROOKSVILLE, FLORIDA 34613
ATTN: GARY L. BROWN

DEVELOPER:
McDONALD'S - FLORIDA REGION
10150 HIGHLAND MANOR DRIVE, SUITE 470
TAMPA, FLORIDA 33610
CONTACT: RAMON SANTOS
PHONE: 813-630-9634

CIVIL ENGINEER:
ADAMS
27524 CASHFORD CIRCLE, SUITE 101
WESLEY CHAPEL, FLORIDA 33544
ATTN: TIM D. HODES, P.E.
PHONE: (813) 929-7499

SURVEYOR:
GEORGE A. SHIMP II & ASSOCIATES
3301 DESOTO BOULEVARD, SUITE D
PALM HARBOR, FLORIDA
ATTN: TREY SHIMP
PHONE: (727) 784-5496

LANDSCAPE ARCHITECT:
ADAMS
1101 ESE LOOP 323, SUITE 101
TYLER, TEXAS 75701
ATTN: SARAI R. AKIN, PLA
PHONE: (903) 324-8400

WATER & SEWER:
PASCO COUNTY UTILITIES DEPARTMENT
7536 STATE STREET, SUITE 205
NEW PORT RICHEY, FLORIDA 34654
ATTN: GEORGEANN BENNETT
PHONE: (727) 847-8145

ELECTRIC:
WITHLACHOOCHEE RIVER ELECTRIC COOPERATIVE
12013 HAYS ROAD
SHADY HILLS, FLORIDA 34610
ATTN: JEFF RATLIFF
PHONE: (727) 868-9465 EXT. 2133

TELEPHONE:
VERIZON
1280 CLEVELAND STREET
CLEARWATER, FLORIDA 33755
ATTN: DAN SULLIVAN
PHONE: (727) 562-1190

GAS:
TECO/PEOPLES GAS
1400 CHANNELSIDE DRIVE
TAMPA, FLORIDA 33605
ATTN: KEN MIRACOLA
PHONE: (813) 927-7719

ARCHITECT:
HARTLEY+PURDY ARCHITECTURE, INC.
1711 NORTH HIMES AVENUE
TAMPA, FLORIDA 33607
ATTN: SCOTT PURDY
PHONE: (813) 353-0035

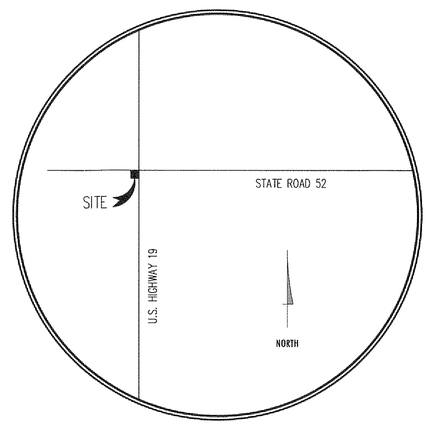

VICINITY MAP
N.T.S.

Sheet List Table

Sheet Number	Sheet Title
C1.0	COVER SHEET
C1.1	GENERAL NOTES
--	BOUNDARY AND TOPOGRAPHIC SURVEY (1 OF 2)
--	BOUNDARY AND TOPOGRAPHIC SURVEY (2 OF 2)
C2.0	DEMO PLAN
C3.0	EROSION CONTROL PLAN
C3.1	EROSION CONTROL DETAILS
C3.2	SWPPP
C4.0	SITE PLAN
C5.0	COORDINATE CONTROL PLAN
C6.0	PAVING PLAN
C7.0	GRADING PLAN
C8.0	STORMWATER MANAGEMENT PLAN
C9.0	UTILITY PLAN
C9.1	LIFT STATION PLAN
D1.0	STANDARD DETAILS
D2.0	STANDARD DETAILS
LP1.0	PHOTOMETRIC PLAN
L1.0	LANDSCAPE PLAN
L1.1	LANDSCAPE DETAILS

PASCO COUNTY PROJECT HISTORY

TYPE	NUMBER	DATE	STATUS
CONDITIONAL USE	CU-82-26	7/27/1982	APPROVED
REZONING	RZ 6889	12/1/2009	APPROVED
PRELIMINARY/CONSTRUCTION PLAN	SML13-013	4/26/2013	APPROVED

TECHNICAL SPECIFICATIONS
THE FOLLOWING ARE INCORPORATED HEREIN BY REFERENCE:

1. FLORIDA DEPARTMENT OF TRANSPORTATION "STANDARD SPECIFICATIONS FOR ROAD AND BRIDGE CONSTRUCTION", EDITION 2015.
2. FLORIDA DEPARTMENT OF TRANSPORTATION "ROADWAY AND TRAFFIC DESIGN STANDARDS", EDITION 2015
3. MANUAL ON UNIFORM TRAFFIC CONTROL DEVICES (MUTCD), EDITION 2009.
4. F.D.O.T. UTILITY ACCOMMODATION MANUAL, EDITION 2010.
5. PASCO COUNTY UTILITIES DEPARTMENT STANDARDS FOR DESIGN AND CONSTRUCTION OF WATER, WASTEWATER, AND RECLAIMED WATER FACILITIES, 2006 EDITION.

** FEMA NOTE **

Flood Statement: According to Community Panel No. 12101C0180F, Dated SEPTEMBER 26, 2014, of the Federal Emergency Management Agency, National Flood Insurance Program Map, this property is located in Zone AE (B.F.E.=12), which is a special flood hazard area. If this site is not within an identified special flood hazard area, this flood statement does not imply that the property and/or the structures thereon will be free from flooding or flood damage. On rare occasions, greater floods can and will occur and flood heights may be increased by man-made or natural causes. This statement shall not create liability on the part of the Surveyor or Engineer.

** NOTICE TO CONTRACTOR - BIDDING **

All questions regarding the General Contractor's preparation of his bid shall be directed to the McDonald's Construction Department. Sub-contractors must direct their questions through the General Contractor only. The Consulting Architect and/or Engineer shall not be contacted by the General Contractors, Sub-contractors, or Suppliers without direct prior authorization from McDonald's

** NOTICE TO CONTRACTORS - TOPOGRAPHIC SURVEY **

Topographic information taken from a Topographic Survey performed by GEORGE A. SHIMP II & ASSOCIATES. The Contractor shall notify the Engineer immediately, in writing, of any discrepancies or omissions to the topographic information. The Contractor(s) shall be responsible for confirming the location (horizontal/vertical) of any buried cables, conduits, pipes, and structures (storm sewer, sanitary sewer, water, gas, television, telephone, etc.) which impact the construction site. The Contractor(s) shall notify the Owner and Engineer if any discrepancies are found between the actual conditions versus the data contained in the construction plans. Any costs incurred as the result of not confirming the actual location (horizontal/vertical) of said cables, conduits, pipes, and structures shall be borne by the Contractor. Additionally, the Contractor(s) shall notify the Owner and Engineer if any errors or discrepancies are found on the construction documents (ps&e), which negatively impact the project. The Engineer and Owner shall be indemnified of problems and/or cost which may result from Contractor's failure to notify Engineer and Owner.

BENCHMARK
THE ELEVATIONS SHOWN HEREON ARE BASED ON THE NORTH AMERICAN VERTICAL DATUM OF 1988 (N.A.V.D. 1988) AS ESTABLISHED FROM N.G.S. BENCHMARK "V 659", HAVING AN ELEVATION OF 9.02 FEET N.A.V.D. 1988. TO CONVERT ELEVATIONS TO THE NATIONAL GEODETIC VERTICAL DATUM OF 1929 (N.G.V.D. 1929), ADD 0.85 FEET.

*** STOP! CALL BEFORE YOU DIG! ***

As required by the "Underground Facility Damage Prevention and Safety Act" Florida One Call System must be contacted (811) at least 48 hours prior to any excavation operations being performed. It is the Contractor's responsibility to contact Florida One Call System.

THESE PLANS ARE SUBJECT TO REVIEW & APPROVAL BY JURISDICTIONAL ENTITIES.

REV	DATE	DESCRIPTION	BY	ISSUE REF
---	---	---	---	---
---	---	---	---	---
---	---	---	---	---
---	---	---	---	---
---	---	---	---	---

Adams
27524 Cashford Circle, Suite 101 ■ Wesley Chapel, Florida 33544 ■ (813) 929-7499

TIM D. HODES
LICENSE
9-22-15
No 67017
STATE OF FLORIDA
PROFESSIONAL ENGINEER

Certificate Of Authorization: #27614

PLAN APPROVALS

	SIGNATURE (2 REQUIRED)	DATE
REGIONAL MGR.		
CONST. MGR.		
OPERATIONS DEPT.		
REAL ESTATE DEPT.		

CO-SIGN SIGNATURES

CONTRACTOR	
OWNER	

MCDONALD'S L/C: 009-2596

OFFICE: FLORIDA REGION
ADDRESS: KROC DRIVE - OAK BROOK, ILLINOIS 60521

McDonald's USA, LLC

These drawings and specifications are the confidential and proprietary property of McDonald's USA, LLC and shall not be reproduced, published or used without written authorization from McDonald's USA, LLC. They are intended for use on this specific site in conjunction with its issue date and are not suitable for use on a different site or at a later time. Use of these drawings for reference or example on another project requires the services of properly licensed architects and engineers. Reproduction of the contract documents for reuse on another project is not authorized.

11929 US HIGHWAY 19
PORT RICHEY,FLORIDA

ADAMS JOB NO.	2014.086	
STATUS	DATE	BY
DATE DRAWN	SEPT 2015	EAO
PLAN CHECKED	SEPT 2015	TDH
AS-BUILT		

COVER SHEET

C1.0

© Copyright 2015, Adams Engineering

FULL PATH: I:_Projects\2014\2014.086_McD_Hudson Hills - Pasco FL\Drawing\03 - Production\1_Projects\2014\2014.086_McD_Hudson Hills - Pasco FL\Drawing\03 - Production\C1.0 COVER SHEET
PLOTTER: Adobe.PDF
PLOT TIME: 5:27:59 PM
PLOT DATE: Tuesday, September 22, 2015
PLOTTED BY: Edgar Ortiz
FILENAME: C1.0 COVER SHEET.dwg

GENERAL NOTES

1. All construction shall be in accordance with the governing municipality's and/or agencies' construction standards and specifications where applicable. In the event that the governing municipality's standard details do not apply, applicable State standard construction details and specifications shall govern.

2. The Contractor shall begin work as directed by the Owner/County or the Notice to Proceed.

3. The Contractor shall notify the Owner/County representative of off-site excess spoils sites that are to be utilized.

4. The Contractor is responsible for keeping existing driveways and sidewalks free of mud and debris from the construction at all times.

5. The Contractor shall maintain adequate site drainage during all phases of construction. The Contractor shall use silt fences (or other methods approved by the engineer and County) as required to prevent silt and construction debris from flowing onto adjacent properties. Contractor shall comply with all applicable federal, state, or local erosion, conservation, and siltation ordinances. Contractor shall remove all temporary erosion control devices upon completion of permanent drainage facilities and the establishment of a stand of grass or other growth to prevent erosion.

6. Disturbed areas that are seeded shall be checked periodically to see that grass coverage is properly maintained. All disturbed areas shall be watered, fertilized, and reseeded or resodded, as necessary.

7. All existing fences are to remain unless specified otherwise by the Owners representative. Any damage to fences shall be repaired at Contractor's expense with new and like materials. Temporary construction site security fences are required.

8. The Contractor is responsible for obtaining all necessary permits and approvals prior to and throughout construction.

9. It is the Contractor's responsibility to maintain neat and accurate construction records for the Owner/County's use. The Contractor shall provide the County clean and accurate full size reproducible Record Drawings which clearly describe all construction and any deviations from the plans.

10. Contractor shall not store materials, equipment or other construction items on adjacent properties or adjacent right-of-ways without the prior written consent of the property Owner and the County. All construction waste materials to be removed shall be disposed of at a permitted location off site, unless written approval is obtained from the County.

11. All excavation is unclassified and shall include all materials encountered to include but not be limited to rock, rubble, debris, trash, etc. Unusable excavated material and all waste resulting from site clearing and grubbing shall be disposed of off site at the Contractor's expense unless otherwise specified or agreed to by Owner.

12. The Contractor shall take all available precautions to control dust. Contractor shall control dust by sprinkling water, or by other means, approved by the County and Engineer.

13. Contractor shall be responsible for all required construction surveying, quality control, and materials testing.

14. All efforts shall be made to avoid damage to existing trees that are to remain. Trees shall be trimmed and painted only if necessary for the safe maneuvering of construction equipment. Contractor shall receive prior approval from the Owner's field representative for removal of any trees. When excavating around a tree, the roots shall be clean cut prior to any excavation work. Do not snag and tear tree roots.

15. All adjacent property damaged by the proposed construction shall be restored to equal or better condition than which it was found before such work was undertaken (non-pay item).

16. All shop drawings and submittals shall be proofread and reviewed by the General Contractor for approval prior to submittal to the Engineer. Subcontractor / General Contractor shall clearly indicate, mark, highlight, and properly clarify products to be considered for approval. Submittals not proofread or reviewed or clarified properly shall be returned unreviewed. Contractor shall resubmit shop drawings and allow for suitable review time. Suitable review time shall be ten (10) working for typical submittals and longer depending on the size and nature of the submittal.

DEMOLITION NOTES

1. No earth-disturbing activities shall commence until all permits are obtained and perimeter erosion control measures are in place.

2. All demolition shall be closely coordinated with the owner's representative regarding items to be salvaged, those to be removed, etc. including any and all tree preservation and transplanting activities, as outlined in the pre-construction meeting. Removal, relocation and/or disposal of any pre-existing on-site trash, debris, or stockpiles shall be included in the total cost of demolition and shall be coordinated with the owner's representative at all times.

3. The contractor shall create ample staging and stockpiling areas for the deliveries of construction materials, concrete deliveries, topsoil, etc. in accordance with the owner's representative and the project specifications.

4. The contractor shall incur all costs for maintenance and repair of the existing fences to remain, irrigation systems to remain, utility lines, etc, as outlined in the specifications.

5. Ingress and egress points, proposed disposal sites, and haul routes must be approved by local officials prior to removal of demolition debris off-site.

6. Contractor shall comply to the fullest extent with all regulations governing agencies regarding the demolition, removal, transportation and disposal of all demolition debris.

7. The contractor shall locate and remove all underground utility cables (electric, telephone, etc.) up to a depth of 24 inches below grade as part of the base bid.

8. The contractor shall locate and remove all underground utility piping, conduit, and cables, regardless of depth, in the area of the proposed building(s) foundations.

9. Contractor shall comply to the fullest extent with the latest OSHA standards for excavation and trenching procedures. Contractor shall use support systems, sloping, benching, etc. as necessary for these operations, and shall comply with all OSHA performance criteria.

10. The contractor shall assume responsibility for the protection of all property corner monuments, benchmarks, control points, etc, and shall have, at his expense, all corner monuments replaced which are disturbed by construction activities.

11. Notes shown hereon regarding specific items of demolition are general in nature, and are not intended to be wholly inclusive. The contractor shall demolish and remove all existing improvements to the satisfaction of the owner, as necessary for the construction of the proposed improvements, and to the extent as noted in the specifications.

12. The contractor shall be responsible for coordinating disconnection of all utilities serving the existing site with the appropriate utility company, and shall obtain approval from same to commence demolition activities.

13. The contractor shall be responsible for plugging, capping, or otherwise terminating utility service lines at existing meter locations, cleanouts, etc. a min. distance of 1 foot outside the limits of the tract shown.

McDONALDS GENERAL NOTES

1. The Contractor shall coordinate with all utility companies to determine exact point of service connection at existing utility. Refer to the building electrical and plumbing drawings for utility service entrance locations, sizes, and circuiting.

2. General Contractor must provide exact "as built" information upon completion.

3. All elevations shown are in reference to the benchmark and must be verified by the General Contractor at groundbreaking.

4. Finish walk and curb elevations shall be 6" above finish pavement.

5. All landscape areas shall be rough graded to 6" below top of all walks and curbs. Finished grading, landscaping and sprinkler systems are by the Owner / Operator.

6. Lot lighting concrete footings to conform with the soils report recommendations for this particular site.

7. It is strongly recommended that no contractual agreements of any kind be signed prior to receiving and thoroughly reviewing all approvals from all of the regulatory authorities having jurisdiction over this project.

8. Due to the nature of the work, all dimensions shown shall be considered approximate. Contractor shall field verify all dimensions prior to beginning construction. Contractors pricing shall cover all costs associated with a complete and properly functioning installation including all related parts, appurtenance, permits, connectors, etc. Shop drawings shall be submitted to the Architect for approval prior to fabrication or installation of any item. Failure to adhere to this procedure shall place full responsibility for any errors directly upon the Contractor.

9. All materials and construction within easements and R.O.W. shall conform to all governing authorities' jurisdictional standard construction details and specifications.

10. Bases, anchor bolts, conduit, and wiring for all signs are by the General Contractor.

11. ¾" empty conduit to locations shown at the lot perimeter for lot lighting is by the general contractor. Lighting fixtures, bases, poles, conduit, and wiring are by the General Contractor.

12. Bases for flagpoles are by the General Contractor. Anchor bolts are by the flagpole supplier.

13. Proposed utilities are shown in schematic only. Exact locations shall be determined to allow for the most economical installation.

UTILITY NOTES

1. The Contractor shall be responsible for locating all utilities, whether private or public, prior to mobilization. Contractor shall visit the site and make all necessary observations and inspections to familiarize themselves with the site and the site facilities. The information and data shown with respect to existing underground facilities at or contiguous to the site is approximate and based on information furnished by the Owners of such underground facilities or on physical appurtenances observed in the field. The Owner and engineer shall not be responsible for the accuracy or completeness of any such information or data; and, the Contractor, shall have full responsibility for reviewing and checking all such information and data, for locating all underground facilities, for coordination of the work with the Owners of such underground facilities during construction, for the safety and protection thereof, and repairing any damage thereto resulting from the work. The cost of all will be considered as having been included in the contract price.

2. The Contractor shall notify all affected utility companies or agencies in writing at least 1 week prior to beginning construction. The Contractor shall be responsible for and make arrangements for any and all temporary utilities, permits, and agreements.

3. The Contractor shall salvage all existing utilities (including signs, valves, fire hydrants, etc.) in accordance with agency requirements and provide to the governing agency.

4. The Contractor shall protect all existing power poles, signs, manholes, telephones risers, water valves, utilities, etc. during all construction phases. Contractor will be responsible to replace any damaged items and restore any services that have been disturbed. All manholes, clean-outs, water valves, fire hydrants and other appurtenances must be adjusted to final grade before the Owner will accept the work. The Contractor shall give the County and/or residents and businesses affected by any anticipated water or sewer service disruptions at least forty-eight (48) hours prior notice.

5. Contractor shall exercise caution and maintain adequate clear zone between the Contractor's equipment and any power lines.

6. Contractor shall comply to the fullest extent with the latest OSHA standards for excavation and trenching procedures. Contractor shall use support systems, sloping, benching, etc. as necessary for these operations, and shall comply with all OSHA performance criteria.

7. Contractor shall, in base bid provide all necessary fittings and appurtenances required to complete all connections, resolve utility conflicts and other incidental utility work shown on the plans or contained in the specifications or required by governing agencies to include, but not limited to temporary services: valves, boxes, meters, backflow preventors, fire department connections, etc. including the repair or replacement of any existing irrigation system. Contractor shall raise/lower or adjust all existing utility mains in conflict with proposed utilities as part of the base bid for all known or unknown lines.

8. All utilities within 5' of proposed building(s) shall adhere to the MEP's recommendations and or requirements. Contractor shall provide storm drain connections for all roof drain lines. Refer to MEP's plans and related technical specifications. Civil utilities (water, sanitary sewer & storm sewer) limits begin 5' outside the building. In the event of a conflict with the MEP's within this area, the MEP's requirements shall govern.

9. Testing of utility trench backfill compaction shall be at 25' intervals and each lift's backfill. Backfill shall be processed such that no dirt clods are in excess of 2" diameter. All sanitary sewer lines and storm sewer lines shall be TV tested at the completion of the project (in addition to minimum Code or other requirements) to check for damage caused by other trades, utility conflicts, trench settlement, etc. The cost of such shall be included in the contractors base price.

10. Lighting fixtures, bases, poles, conduit, and wiring are by the General Contractor.

11. Proposed utilities are shown in schematic only. Exact locations shall be determined to allow for propert fit and the most proper economical installation.

12. All water and sewer construction to be in accordance with the utility provider's construction standards and specification, and to all applicable codes.

13. Storm sewer shall be RCP with gasket joints per FDOT standards, unless approved by the engineer.

PAVING NOTES

1. The Contractor shall be responsible for the cost of all failing density tests. In addition, the Contractor shall provide the Owner five (5) passing site pavement cores for the Owners use in the Owner's testing for thickness. Core locations shall be designated by the Owner. Contractor shall patch core holes and finish with like and matching materials. Contractor shall be responsible for any additional testing costs should the above tests fail minimum criteria as established by the Department of Transportation (DOT). Any non-conforming paving shall be replaced or resolved in accordance with DOT specifications.

2. All earthwork and subgrade preparation shall be in accordance with the Geotechnical Investigation and those recommendations listed within the report. Refer to this report for all earthwork and related items. Refer to Structural for building prep. The report references agency/industry standards. In the event that there is a question or dispute between governing specifications, the most stringent shall apply such that the owner receives the most advantageous finished product.

3. Asphalt & base for site paving shall conform to the latest DOT specifications.

4. All reinforcing steel and dowel bars in pavement shall be supported and maintained at the correct clearances by the use of bar chairs or other approved support.

5. The Contractor is solely responsible for performing all construction layouts from the site layout control points and from the dimensions shown. The Contractor must notify the engineer of any discrepancies in advance and allow for the engineer's response before proceeding with the work.

6. Unless otherwise noted, all concrete pavement shall be minimum 4,000 PSI compressive strength (at 28 days) & reinforced with #3 (Grade 60 deformed bars) bars at 18" O.C.E.W. Fire Lanes, parking stalls, and roadway stripping & markings shall conform to governing standards. Sidewalks within landscape areas shall be minimum 4" thick. All joints (expansion, isolation, contraction, & construction) for concrete paving and incidental cracks shall be sealed with self leveling polyurethane sealant and installed in accordance with the American Concrete Pavement Association (ACPA) recommendations. Contractor shall observe the architectural and structural jointing layouts. In the event of a discrepancy or conflict for site paving, the Contractor shall refer to ACPA publication IS061.01P and IS400.01P for the joint specifications and the layout of pavement joints (non-pay item).
   Joint Spacing shall be as follows:
   5 inch pavement thickness - 10' joint spacing
   6+ inch pavement thickness - 12' joint spacing
   In areas where pavement thicknesss varies, the shorter joint spacing shall govern.

7. It shall be the responsibility of the Contractor to supply the engineer with a concrete mix design at the pre-construction meeting for review and approval. The cost of this design shall be included in the unit price of pavement material. Fly Ash is not permitted as a substitute for cement.

8. Contractor shall adjust all utilities (existing and proposed) to final grade (non-pay item). All utilities and appurtenances shall be extended up to final grade. Utility clean-outs, valves, manholes, etc. located within paved areas shall be paved monolithic with no block-outs. In non-paved areas, said appurtenances shall have a 4" thick concrete pad extending 12" beyond said appurtenance (block out) poured at final grade for protection against damage from mowing and maintenance equipment. Contractor shall place irrigation and other sleeves prior to any paving, per the irrigation plan, or as directed by the Owner's representative with the curbs scored to identify the sleeve locations.

9. The Contractor shall use care during compaction activities so as not to adversely affect landscape areas. After compaction and prior to placing landscaping, the upper twelve inches (12") of all landscaped areas shall be aerated, tilled, or otherwise processed so as to promote healthy root growth for turf and other vegetation. The Contractor will be responsible for any repairs, undercutting, removal, disposal, and backfilling of these areas if stabilization is discovered (non-pay item).

10. All pavement within 5' of proposed building(s) shall adhere to the structural recommendations and or Architectural requirements. Refer to structural and architectural plans and related technical specifications. Civil pavement limits begin 5' outside the building. In the event of of a conflict with the Structural and/or Architectural within this area, the Structural/Architect requirements shall govern.

DEWATERING ACTIVITIES

The Contractor shall adhere to all local, state, and federal codes and associated guidelines when performing any work on this project. This project requires below grade excavations and groundwater may become an issue. Short-term dewatering may be required. The Contractor and subcontractors acknowledge the codes set forth by Florida Administrative Code (F.A.C.) 40D-20 for General Water Use Permits. The Contractor and subcontractors shall adhere to all applicable local, state, and federal water use codes. The Engineer does not control the Contractor's means and methods and shall not be liable for Contractor's actions.

Should the Contractor elect to perform minor short-term dewatering of the on-site utility trenches, the Contractor shall strictly adhere to F.A.C. 40D-20 and as such no dewatering fluid (water) shall be removed from the site. Adequate temporary storage tanks or other suitable structures shall be utilized on-site by the Contractor or subcontractor to ensure that absolutely no dewatering fluid is discharged from the site. The Contractor shall employ adequate means and methods to perform the work in accordance with all codes. The Contractor shall consider phasing of the work so as to manage excavations, earthwork, and impacts due to typical and seasonal weather conditions.

SEQUENCING / TRAFFIC CONTROL NOTES

1. Contractor shall prepare, furnish, maintain, and remove all traffic control barricades, warning signs, lights, construction fences, etc. for the work throughout construction. All barricades, warning signs, lights, devices, etc., for the guidance and protection of traffic and pedestrians must conform to the installation shown in the MUTCD, as currently amended, by the Department of Transportation.

2. Contractor shall provide access to all required entrances and exits at all times throughout construction. Contractor shall provide a traffic control and sequencing plan to the County and owner prior to the start of construction. Coordinate the plan and schedule with owner's representatives.

PASCO COUNTY SITE PLAN NOTES

1. ALL UTILITY CONSTRUCTION SHALL COMPLY WITH PASCO COUNTY STANDARDS FOR DESIGN AND CONSTRUCTION OF WATER AND WASTEWATER FACILITIES SPECIFICATIONS, LATEST EDITION.
2. ALL ON-SITE WATER AND SEWER FACILITIES SHALL BE OWNED AND MAINTAINED BY THE OWNER-DEVELOPER.
3. INSTALLATION OF FUEL STORAGE TANKS REQUIRES REVIEW AND APPROVAL BY THE FIRE MARSHAL AND THE ISSUANCE OF A SEPARATE BUILDING PERMIT. APPROVAL OF THE SITE PLAN DOES NOT CONSTITUTE APPROVAL OF THE LOCATION OF THE FUEL TANKS.
4. ALL PROPOSED SIGNS MUST BE APPLIED FOR, APPROVED, AND PERMITTED ON AN INDIVIDUAL BASIS APART FROM ANY ULTIMATELY APPROVED SITE PLAN. APPROVAL OF THIS SITE PLAN DOES NOT CONSTITUTE APPROVAL OF ANY SIGNAGE.
5. HANDICAP PARKING SPACES WILL BE PROPERLY SIGNED AND STRIPED IN ACCORDANCE WITH FLORIDA STATUE 316, THE MANUAL ON UNIFORM TRAFFIC CONTROL DEVICES, OR OTHER APPLICABLE STANDARDS.
6. THE ARCHITECT/ENGINEER CERTIFIES THAT THE SITE HAS BEEN DESIGNED IN ACCORDANCE WITH THE AMERICANS WITH DISABILITIES ACT.
7. ALL ON-SITE PARKING SPACES WILL BE STRIPED AND SIGNED IN ACCORDANCE WITH THE MANUAL ON UNIFORM TRAFFIC DEVICES, LATEST EDITION. PARKING SPACES, DIRECTIONAL ARROWS, AND STOP BARS SHALL BE STRIPED IN WHITE. IT SHALL BE THE OWNER/DEVELOPER'S RESPONSIBILITY TO PROPERLY SIGN AND STRIPE IN ACCORDANCE WITH APPLICABLE STANDARDS.
8. THE OWNER/DEVELOPER ACKNOWLEDGES THAT THIS APPROVAL DOES NOT INCLUDE ANY WORK IN THE COUNTY RIGHT-OF-WAY. ALL RIGHT-OF-WAY WORK SHALL BE A FUNCTION OF AN APPROVED PASCO RIGHT-OF-WAY USE PERMIT.
9. ALL CLEAR-SITE AREAS SHALL BE KEPT FREE OF ANY SIGNAGE PLANTINGS, TREES, ETC. IN EXCESS OF THREE-AND-A-HALF (3-1/2) FEET IN HEIGHT.
10. NO IRRIGATION SYSTEM OR LANDSCAPING SHALL BE INSTALLED IN ANY COUNTY OR STATE RIGHT-OF-WAY WITHOUT ISSUANCE OF APPROPRIATE RIGHT-OF-WAY USE PERMIT.
11. THE OWNER/DEVELOPER ACKNOWLEDGES THAT THE SITE AND ITS SUBSEQUENT BUILDING PERMITS SHALL COMPLY WITH ALL REZONING/MPUD/PUD CONDITIONS.
12. ALL STRUCTURES, INCLUDING BUFFER WALLS, RETAINING WALLS, SIGNAGE, ETC. REQUIRE BUILDING PERMITS.

PASCO COUNTY STANDARD FIRE PROTECTION NOTES:

A. ALL PROJECTS MUST COMPLY WITH PASCO COUNTY FIRE HYDRANT ORDINANCE NO. 46-51.

B. FIRE HYDRANTS SHALL BE INSTALLED AND IN SERVICE PRIOR TO THE ACCUMULATION OF COMBUSTIBLES.

C. PER THE NATIONAL FIRE PROTECTION ASSOCIATION, NFPA-1, 16.4.3.1.3: WHERE UNDERGROUND WATER MAINS AND HYDRANTS ARE TO BE PROVIDED, THEY SHALL BE INSTALLED, COMPLETED, AND IN SERVICE PRIOR TO CONSTRUCTION WORK.

D. PER NFPA-1, 18.3.4.1: CLEARANCES OF 7½ FEET IN FRONT OF AND TO THE SIDES OF THE FIRE HYDRANT WITH A 4-FOOT CLEARANCE TO THE REAR MUST BE MAINTAINED AT ALL TIMES.

E. GATED ENTRIES REQUIRE A SIREN OPERATING SYSTEM OR A 3M OPTICOM SYSTEM FOR EMERGENCY ACCESS.

BROOKSVILLE MAINTENANCE FDOT NOTES:

ALL WORK PERFORMED IN THE DEPARTMENT'S RIGHT OF WAY SHALL BE DONE IN ACCORDANCE WITH THE MOST CURRENT EDITIONS OF:
- A. F.D.O.T. STANDARD SPECIFICATIONS FOR ROAD AND BRIDGE CONSTRUCTION.
- B. F.D.O.T. DESIGN STANDARDS FOR DESIGN, CONSTRUCTION, MAINTENANCE AND UTILITY OPERATIONS ON THE STATE HIGHWAY SYSTEM.
- C. F.D.O.T. ROADWAY PLANS PREPARATION MANUAL VOLUME I, CHAPTER 2 AND/OR 25.
- D. F.D.O.T. FLEXIBLE PAVEMENT DESIGN MANUAL FOR NEW CONSTRUCTION AND PAVEMENT REHABILITATION.

1. ALL AREAS IN THE FDOT RIGHT OF WAY DISTURBED DURING CONSTRUCTION SHALL BE RESTORED, COMPACTED, SODDED AND WATERED IN CONFORMANCE WITH THE FDOT STANDARD SPECIFICATIONS FOR ROAD AND BRIDGE CONSTRUCTION. SECTION 575 AND 981 AND DESIGN STANDARDS INDEX 105.
2. DAYTIME WORK ONLY. THE F.D.O.T. ENGINEER MUST APPROVE NIGHT WORK AND LANE CLOSURES AT LEAST 48 HOURS IN ADVANCE. THE APPLICANT MUST NOTIFY THE FLORIDA DEPARTMENT OF TRANSPORTATION LOCAL MAINTENANCE OFFICE 48 HOURS IN ADVANCE OF STARTING ANY PROPOSED WORK. CALL BROOKSVILLE MAINTENANCE, JOHN KILKENNY @ 352-797-5700.
3. ALL TRAFFIC STRIPES AND PAVEMENT MARKINGS ARE TO BE LEAD-FREE, NON-SOLVENT BASED THERMOPLASTIC. THE PERMITTEE SHALL FURNISH THE DEPARTMENT WITH THE MANUFACTURER'S CERTIFICATION THAT THE THERMOPLASTIC IS 'LEAD FREE'. REMOVAL OF EXISTING STRIPING SHALL BE DONE BY MILLING AND RESURFACING OF THE FRICTION/SURFACE COURSE TO OBLITERATE OBSOLETE PAVEMENT MARKINGS.
4. ALL PROPOSED TRAFFIC SIGNS AND PAVEMENT MARKINGS SHALL BE IN CONFORMANCE WITH AND CONSTRUCTED TO THE FDOT DESIGN STANDARDS INDEX SERIES 11000 AND 17000 SERIES. THE PROPERTY OWNER MUST MAINTAIN THE TRAFFIC SIGNS AND MARKINGS FOR THE DRIVEWAY.
5. THE FDOT REQUIRES DOCUMENTATION FOR SUCCESSFUL COMPLETION OF AN APPROVED WORK ZONE TRAFFIC CONTROL TRAINING COURSE FOR THE AGENCY, UTILITY OR CONTRACTOR EMPLOYEE(S) INSTALLING AND/OR MAINTAINING THE APPROVED MAINTENANCE OF TRAFFIC PLAN, DOCUMENTATION IS TO BE FURNISHED TO THE DEPARTMENT AT THE PRE-CONSTRUCTION MEETING OR BEFORE OCCUPYING STATE RIGHT-OF-WAY.
6. MAINTENANCE OF TRAFFIC PLAN FOR WORK ZONES SHALL BE IN CONFORMANCE WITH All APPLICABLE INDICES OF THE FDOT DESIGN STANDARDS INDEX 600 SERIES ACCORDING TO THE TYPE OF ROADWAY AND TYPE OF WORK BEING PERFORMED.
7. SILT FENCE FOR EROSION CONTROL IN CONFORMANCE WITH DESIGN STANDARDS INDEX (DSI) 102 IS REQUIRED FOR ALL AREAS OF CONSTRUCTION WITHIN FDOT R/W: PERPENDICULAR TO AND PARALLEL WITH THE STATE ROAD.
8. SIDEWALK SHALL BE CONSTRUCTED PER FDOT INDEX 304 AND 310. DETECTABLE WARNING STRIPS, A.K.A, TRUNCATED DOMES, FOR DISTRICT SEVEN CONSTRUCTION AND MAINTENANCE SHOULD BE EITHER INSET CERAMIC TILES OR THERMOPLASTIC DETECTABLE WARNING STRIPS. THESE WARNING SURFACES SHALL ONLY BE PROVIDED BY THE FOLLOWING VENDORS/MANUFACTURERS.
   - A. INLINE TRUNCATED DOME EZ TILE SUPPLIED BY PROFESSIONAL PAVEMENT PRODUCTS
   - B. TOPMARK SUPPLIED BY FLINT TRADING
   - C. VANGUARD TRUNCATED DOME SUPPLIED BY VANGUARD
9. **MAINTENANCE OF TRAFFIC PLAN MUST INCLUDE FDOT DESIGN STANDARDS INDEX 660 PEDESTRIAN CONTROL FOR CLOSURE OF SIDEWALKS.

CULTURAL RESOURCES NOTES

- IF DURING CONSTRUCTION ACTIVITIES ANY EVIDENCE OF HISTORIC RESOURCES, INCLUDING BUT NOT LIMITED TO ABORIGINAL OR HISTORIC POTTERY, PREHISTORIC STONE TOOLS, BONE OR SHELL TOOLS, HISTORIC TRASH PITS, OR HISTORIC BUILDING FOUNDATION, ARE DISCOVERED, WORK SHALL COME TO AN IMMEDIATE STOP AND THE FLORIDA DEPARTMENT OF HISTORIC RESOURCES (STATE HISTORIC PRESERVATION OFFICER) AND PASCO COUNTY SHALL BE NOTIFIED WITHIN TWO WORKING DAYS OF THE RESOURCES FOUND ON THE SITE.
- IF DURING CONSTRUCTION ACTIVITIES ANY EVIDENCE OF THE PRESENCE OF STATE AND FEDERALLY PROTECTED PLANT AND/OR ANIMAL SPECIES IS DISCOVERED, WORK SHALL COME TO AN IMMEDIATE STOP AND PASCO COUNTY SHALL BE NOTIFIED WITHIN TWO WORKING DAYS OF THE PLANT AND/OR ANIMAL SPECIES FOUND ON THE SITE.

TECHNICAL SPECIFICATIONS

THE FOLLOWING ARE INCORPORATED HEREIN BY REFERENCE:

1. FLORIDA DEPARTMENT OF TRANSPORTATION "STANDARD SPECIFICATIONS FOR ROAD AND BRIDGE CONSTRUCTION", EDITION 2015.
2. FLORIDA DEPARTMENT OF TRANSPORTATION "ROADWAY AND TRAFFIC DESIGN STANDARDS", EDITION 2015
3. MANUAL ON UNIFORM TRAFFIC CONTROL DEVICES (MUTCD), EDITION 2009.
4. F.D.O.T. UTILITY ACCOMMODATION MANUAL, EDITION 2010.
5. PASCO COUNTY UTILITIES DEPARTMENT STANDARDS FOR DESIGN AND CONSTRUCTION OF WATER, WASTEWATER, AND RECLAIMED WATER FACILITIES, 2006 EDITION.

REV	DATE	DESCRIPTION	BY	ISSUE REF
----	----	----	----	----
----	----	----	----	----
----	----	----	----	----
----	----	----	----	----

Adams
27524 Cashford Circle, Suite 101 ■ Wesley Chapel, Florida 33544 ■ (813) 929-7499

TIM D. HODGES LICENSE No 67017 STATE OF FLORIDA PROFESSIONAL ENGINEER 9-22-15

Certificate Of Authorization: #27614

PLAN APPROVALS		
	SIGNATURE (2 REQUIRED)	DATE
REGIONAL MGR.		
CONST. MGR.		
OPERATIONS DEPT.		
REAL ESTATE DEPT.		
CO-SIGN SIGNATURES		
CONTRACTOR		
OWNER		

OFFICE: FLORIDA REGION
ADDRESS: KROC DRIVE - OAK BROOK, ILLINOIS 60521
MCDONALD'S L/C: 009-2596

McDonald's USA, LLC

These drawings and specifications are the confidential and proprietary property of McDonald's USA, LLC and shall not be copied or reproduced without written authorization. The contract documents were prepared for use on this specific site in conjunction with its issue date and are not suitable for use on a different site or at a later time. Use of these drawings for reference or example on another project requires the services of properly licensed architects and engineers. Reproduction of the contract documents for reuse on another project is not authorized.

11929 US HIGHWAY 19
PORT RICHEY, FLORIDA

ADAMS JOB NO.	2014.086	
STATUS	DATE	BY
DATE DRAWN	SEPT 2015	EAO
PLAN CHECKED	SEPT 2015	TDH
AS-BUILT		

GENERAL NOTES

C1.1

© Copyright 2015, Adams Engineering

FULL PATH: I:_Projects\2014\2014.086_McD_Hudson Relo - Pasco FL\Drawings\03 - Production I:_Projects\2014\2014.086_McD_Hudson Relo - Pasco FL\Drawings\03 - Production\C1.1 GENERAL NOTES
PLOTTER: Adobe PDF
PLOT TIME: 5:26:58 PM
PLOT DATE: Tuesday, September 22, 2015
PLOTTED BY: Edgar Ortiz
FILENAME: C1.1 GENERAL NOTES.dwg

McDonald's

11929 U.S. HIGHWAY No. 19
SECTION 9, TOWNSHIP 25 SOUTH, RANGE 16 EAST
PORT RICHEY, PASCO COUNTY, FLORIDA

LEGAL DESCRIPTION

PARCEL 1:

A PORTION OF TRACT 1, PORT RICHEY LAND COMPANY, AS RECORDED IN PLAT BOOK 1, PAGE 61, OF THE PUBLIC RECORDS OF PASCO COUNTY, FLORIDA, DESCRIBED AS FOLLOWS:

COMMENCE AT THE NORTHEAST CORNER OF SECTION 9, TOWNSHIP 25 SOUTH, RANGE 16 EAST, RUN THENCE S00°23'06"W, 36.97 FEET; THENCE N89°36'54"W, 116.00 FEET TO A POINT OF BEGINNING; THENCE RUN S00°23'06"W, 178.61 FEET; THENCE RUN N89°52'00"W, 193.00 FEET; THENCE RUN N00°23'06"E, 21.55 FEET; THENCE RUN N89°52'00"W, 7.00 FEET; THENCE RUN N00°23'06"E, 162.78 FEET; THENCE RUN S88°50'59"E, 187.87 FEET; THENCE RUN S78°42'07"E, 12.36 FEET TO THE POINT OF BEGINNING.

PARCEL 2:

A PORTION OF TRACT 1, PORT RICHEY LAND COMPANY, AS RECORDED IN PLAT BOOK 1, PAGE 61, OF THE PUBLIC RECORDS OF PASCO COUNTY, FLORIDA, DESCRIBED AS FOLLOWS:

COMMENCE AT THE NORTHEAST CORNER OF SECTION 9, TOWNSHIP 25 SOUTH, RANGE 16 EAST, RUN THENCE S00°23'06"W, 36.97 FEET; THENCE RUN N89°36'54"W, 116.00 FEET; THENCE RUN S00°23'06"W, 178.61 FEET TO THE POINT OF BEGINNING; THENCE CONTINUING S00°23'06"W, 50.00 FEET; THENCE RUN N89°52'00"W, 193.00 FEET; THENCE RUN N00°23' 06"E, 50.00 FEET; THENCE RUN S89°52'00"E, 193.00 FEET TO THE POINT OF BEGINNING.

TOTAL SITE AREA CONTAINS 45,996 SQUARE FEET OR 1.06 ACRES, MORE OR LESS.

FLOOD ZONE

THE ABOVE DESCRIBED PROPERTY IS LOCATED IN ZONE AE (BASE FLOOD ELEVATIONS OF 11 & 12 FEET), IN ACCORDANCE WITH THE FIRM MAP OF PASCO COUNTY, COMMUNITY NUMBER 120230 (MAP NUMBER 12101C-0180-F), MAP DATED SEPTEMBER 26, 2014.

CERTIFICATION

TO: McDONALD'S USA, LLC, A DELAWARE LIMITED LIABILITY COMPANY; McDONALD'S RESTAURANTS OF FLORIDA, INC., A FLORIDA CORPORATION; McDONALD'S CORPORATION, A DELAWARE CORPORATION; AND CHICAGO TITLE INSURANCE COMPANY

THIS IS TO CERTIFY THAT THIS MAP OR PLAT HAS BEEN COMPILED FROM A SURVEY ACTUALLY MADE ON THE GROUND UNDER MY SUPERVISION; THAT IT IS CORRECT AND COMPLIES WITH THE REQUIREMENTS PROVIDED BY McDONALD'S CORPORATION; THAT IT MEETS MINIMUM TECHNICAL STANDARDS FOR LAND SURVEYS IN THE STATE OF FLORIDA CHAPTER 5J-17 FLORIDA ADMINISTRATIVE CODE, PURSUANT TO SECTION 472.027, FLORIDA STATUTES; AND THAT THIS MAP OR PLAT AND THE SURVEY ON WHICH IT IS BASED WERE MADE IN ACCORDANCE WITH THE 2011 MINIMUM STANDARD DETAIL REQUIREMENTS FOR ALTA/ACSM LAND TITLE SURVEYS, JOINTLY ESTABLISHED AND ADOPTED BY ALTA AND NSPS, AND INCLUDES ITEMS 1, 2, 3, 4, 6(B), 7(A), 8, 9, 11(A), 13, 14, 16, 17 AND 18 OF TABLE A THEREOF. THE FIELD WORK WAS COMPLETED ON JUNE 11, 2015.

George A. Shimp III — 9-22-2015
GEORGE A. SHIMP III — DATE
REGISTRATION NO. 6137

PROJECT LOCATION MAP

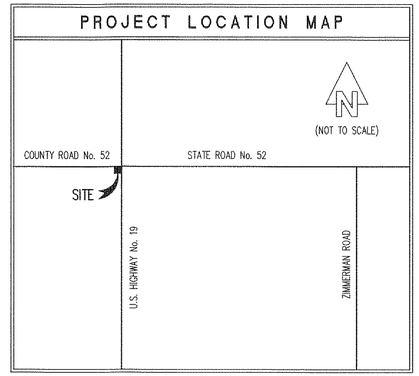

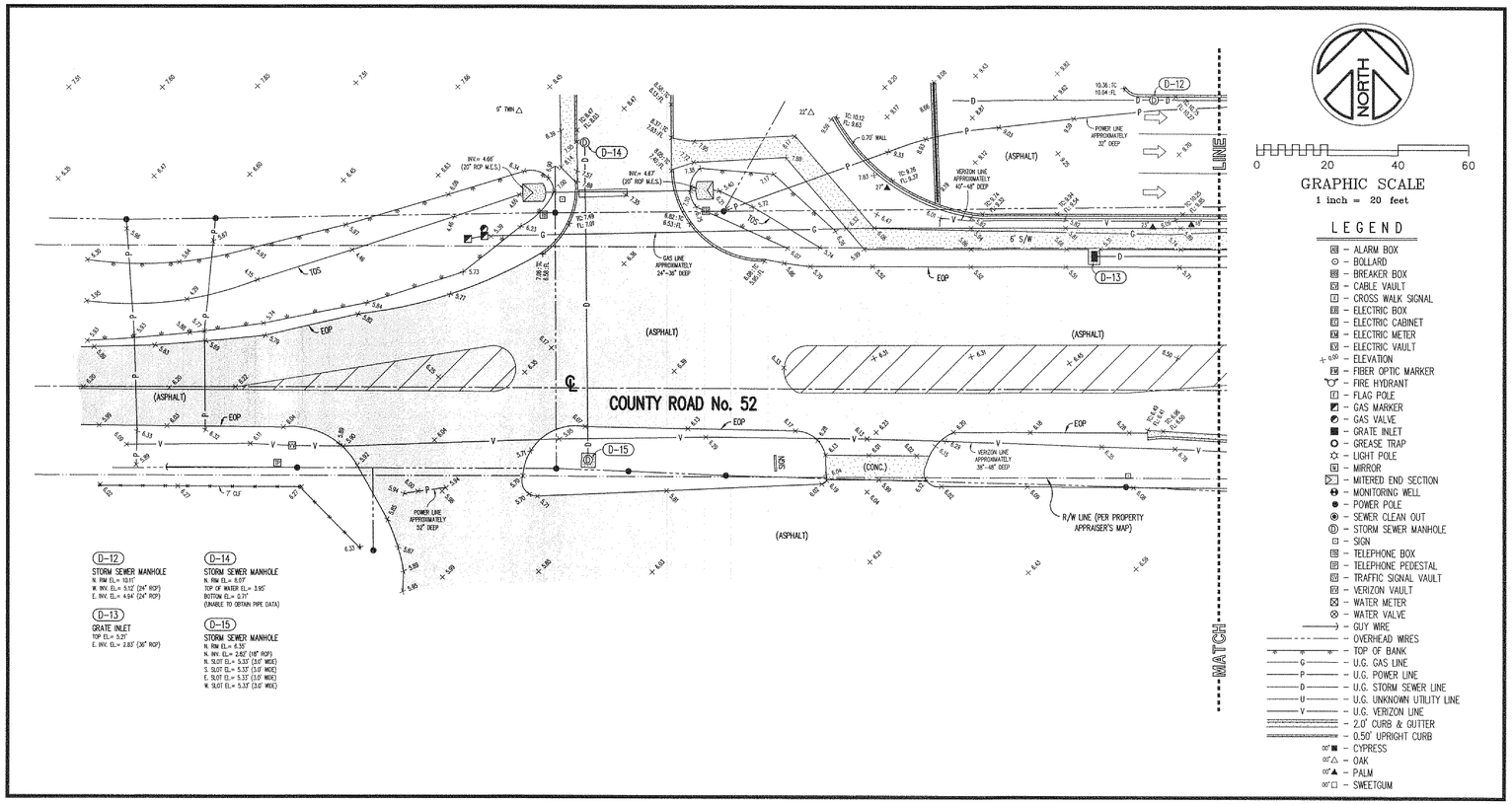

GRAPHIC SCALE
1 inch = 20 feet

LEGEND

- ALARM BOX
- BOLLARD
- BREAKER BOX
- CABLE VAULT
- CROSS WALK SIGNAL
- ELECTRIC BOX
- ELECTRIC CABINET
- ELECTRIC METER
- ELECTRIC VAULT
- 0.50' – ELEVATION
- FIBER OPTIC MARKER
- FIRE HYDRANT
- FLAG POLE
- GAS MARKER
- GAS VALVE
- GRATE INLET
- GREASE TRAP
- LIGHT POLE
- MIRROR
- MITERED END SECTION
- MONITORING WELL
- POWER POLE
- SEWER CLEAN OUT
- STORM SEWER MANHOLE
- SIGN
- TELEPHONE BOX
- TELEPHONE PEDESTAL
- TRAFFIC SIGNAL VAULT
- VERIZON VAULT
- WATER METER
- WATER VALVE
- GUY WIRE
- OVERHEAD WIRES
- TOP OF BANK
- G – U.G. GAS LINE
- P – U.G. POWER LINE
- D – U.G. STORM SEWER LINE
- U – U.G. UNKNOWN UTILITY LINE
- V – U.G. VERIZON LINE
- 2.0' CURB & GUTTER
- 0.50' UPRIGHT CURB
- 00" – CYPRESS
- 00" – OAK
- 00" – PALM
- 00" – SWEETGUM

SURVEY ABBREVIATIONS

A = ARC LENGTH
A/C = AIR CONDITIONER
AF = ALUMINUM FENCE
ALUM = ALUMINUM
ASPH = ASPHALT
BFE = BASE FLOOD ELEVATION
BLDG = BUILDING
BLK = BLOCK
BM = BENCH MARK
BNDY = BOUNDARY
BRG = BEARING
BWF = BARBED WIRE FENCE
C = CALCULATED
CB = CHORD BEARING
CBS = CONCRETE BLOCK STRUCTURE
CHD = CHORD
CL = CENTERLINE
CLF = CHAIN LINK FENCE
CLOS = CLOSURE
COL = COLUMN
CONC = CONCRETE
CR = COUNTY ROAD
C/S = CONCRETE SLAB
COR = CORNER
COV = COVERED AREA
D = DEED
DOT = DEPARTMENT OF TRANSPORTATION
DRNG = DRAINAGE
D/W = DRIVEWAY
EL OR ELEV = ELEVATION
E/P = EDGE OF PAVEMENT
E/W = EDGE OF WATER
ESMT = EASEMENT
FCM = FOUND CONCRETE MONUMENT
FES = FLARED END SECTION
FIP = FOUND IRON PIPE
FIR = FOUND IRON ROD
FL = FLOW LINE
FLD = FIELD
FND = FOUND
FOP = FOUND OPEN PIPE
FPC = FLORIDA POWER CORP.
FPP = FOUND PINCHED PIPE
FRM = FRAME
FZL = FLOOD ZONE LINE
GAR = GARAGE
G/E = GLASS ENCLOSURE
HWF = HOG WIRE FENCE
HWL = HIGH WATER LINE
INV = INVERT
LB = LAND SURVEYING BUSINESS
LFE = LOWEST FLOOR ELEV
LHSM = LOWEST HORIZONTAL SUPPORTING MEMBER
LS = LAND SURVEYOR
M = MEASURED
MAS = MASONRY
MES = MITERED END SECTION
MH = MANHOLE
MHWL = MEAN HIGH WATER LINE
MSL = MEAN SEA LEVEL
NAIL = NAIL AND BOTTLE CAP
NAD = NAIL AND DISK
NAIL = NAIL AND TAB
NGVD = NATIONAL GEODETIC VERTICAL DATUM
NO = NUMBER
O/A = OVERALL
OHW = OVERHEAD WIRE(S)
OR = OFFICIAL RECORDS
O/S = OFFSET
P = PLAT
PB = PLAT BOOK
PC = POINT OF CURVE
PCC = POINT OF COMPOUND CURVE
PCP = PERMANENT CONTROL POINT
PG = PAGE
PK = PARKER KALON
PL = PROPERTY LINE
POB = POINT OF BEGINNING
POC = POINT OF COMMENCEMENT
POL = POINT ON LINE
PP = POWER POLE
PRC = POINT OF REVERSE CURVATURE
PRM = PERMANENT REFERENCE MONUMENT
PROP = PROPERTY
PSM = PROFESSIONAL SURVEYOR & MAPPER
PT = POINT OF TANGENCY
PVMT = PAVEMENT
RAD = RADIUS
R = RECORD
REF = REFERENCE
RES = RESIDENCE
RL = RADIAL LINE
RLS = REGISTERED LAND SURVEYOR
RND = ROUND
RNG = RANGE
RRS = RAIL ROAD SPIKE
R/W = RIGHT-OF-WAY
SCM = SET CONCRETE MONUMENT
S/E = SCREENED ENCLOSURE
SEC = SECTION
SET NAIL = SET NAIL AND DISK LB# 1834
SIR = SET 1/2" IRON ROD LB# 1834
SQ = SQUARE
SRF = SPLIT RAIL FENCE
SR = STATE ROAD
STY = STORY
SWB = SUSPENSION
S/W = SIDEWALK
TB = "T" BAR
TBM = TEMPORARY BENCH MARK
TC = TOP OF CURB
TOB = TOP OF BANK
TOS = TOE OF SLOPE
TRANS = TRANSFORMER
TWP = TOWNSHIP
TYP = TYPICAL
UG = UNDERGROUND
UTIL = UTILITY
WD = WOOD
WF = WOOD FENCE
WFS = WOOD FRAME STRUCTURE
WIF = WROUGHT IRON FENCE
WIT = WITNESS
WRF = WIRE FENCE
WV = WATER VALVE

*** ABBREVIATIONS MAY ALSO BE CONCATENATED AS REQUIRED.
*** OTHER COMMONLY RECOGNIZED AND/OR ACCEPTED ABBREVIATIONS ARE ALSO UTILIZED BUT NOT SPECIFIED HEREON.

GENERAL NOTES

1.) THIS SURVEY HAS BEEN EXCLUSIVELY PREPARED FOR THE NAMED ENTITIES (THE "CERTIFIED PARTIES") SHOWN HEREON AND IS NOT TRANSFERABLE. NO OTHER PERSON OR ENTITY IS ENTITLED TO RELY UPON AND/OR RE-USE THIS SURVEY FOR ANY PURPOSE WITHOUT THE EXPRESSED, WRITTEN CONSENT OF GEORGE A. SHIMP II & ASSOCIATES, INC. (THE "SURVEY FIRM") AND THE CERTIFYING PROFESSIONAL SURVEYOR AND MAPPER (THE "SIGNING SURVEYOR"), HEREINAFTER COLLECTIVELY REFERRED TO AS "THE SURVEYOR". NOTHING HEREIN SHALL BE CONSTRUED TO GIVE ANY RIGHTS OR BENEFITS TO ANYONE OTHER THAN THE CERTIFIED PARTIES SHOWN ON THIS SURVEY.

2.) UNAUTHORIZED COPIES AND/OR REPRODUCTIONS VIA ANY MEDIUM OF THIS SURVEY OR ANY PORTIONS THEREOF ARE EXPRESSLY PROHIBITED WITHOUT THE SURVEYOR'S EXPRESSED, WRITTEN CONSENT.

3.) THE WORD "CERTIFY" AS SHOWN AND USED HEREON, MEANS AN EXPRESSION OF THE SURVEYOR'S OPINION REGARDING THE FACTS OF THE SURVEY BASED ON HIS BEST KNOWLEDGE, INFORMATION AND BELIEF, AND THAT IT THIS CONSTITUTES NEITHER A GUARANTEE NOR A WARRANTY, EITHER EXPRESSED OR IMPLIED.

4.) THIS SURVEY SHALL BE VALID FOR ONE (1) YEAR FROM THE DATE OF FIELD SURVEY SHOWN HEREON.

5.) THIS PROPERTY WAS SURVEYED BASED ON THE PROPERTY'S LEGAL DESCRIPTION, AS SHOWN HEREON, WHICH UNLESS OTHERWISE STATED, WAS PROVIDED TO THE SURVEYOR BY THE CLIENT, OR CLIENT'S DESIGNATED AGENT.

6.) THIS SURVEY WAS PREPARED WITH THE BENEFIT OF CHICAGO TITLE INSURANCE COMPANY TITLE COMMITMENT, COMMITMENT ORDER NUMBER 5321554, DATED JUNE 11, 2015.

7.) THE SURVEYOR HAS MADE NO INVESTIGATION OR INDEPENDENT SEARCH FOR EASEMENTS OF RECORD, ENCUMBRANCES, RESTRICTIVE COVENANTS, OWNERSHIP TITLE EVIDENCE OR ANY OTHER MATTERS OF RECORD.

8.) BASIS OF BEARINGS: MEASURED BEARINGS ARE IN REFERENCE TO FLORIDA STATE PLANE COORDINATE GRID NORTH, WEST ZONE, NORTH AMERICAN DATUM OF 1983 (2011 READJUSTMENT), AS ESTABLISHED BY THE NATIONAL GEODETIC SURVEY.

9.) THERE ARE NO VISIBLE ENCROACHMENTS, EXCEPT AS SHOWN HEREON.

10.) THIS SURVEY SHOWS VISIBLE, ABOVE GROUND FEATURES. NO UNDERGROUND FEATURES, INCLUDING BUT NOT LIMITED TO FOUNDATIONS, STRUCTURES, INSTALLATIONS OR IMPROVEMENTS HAVE BEEN LOCATED, EXCEPT AS SHOWN HEREON.

11.) ALL BUILDING TIES, PROPERTY MARKER LOCATIONS AND OTHER SITE IMPROVEMENT LOCATIONS SHOWN HEREON ARE MEASURED PERPENDICULAR TO ADJACENT BOUNDARY LINES, UNLESS OTHERWISE STATED.

12.) THE FLOOD ZONE DETERMINATION IS BASED ON THE FLOOD INSURANCE RATE MAP, AS PUBLISHED BY THE FEDERAL EMERGENCY MANAGEMENT AGENCY, AND DOES NOT IMPLY THAT THE PROPERTY WILL OR WILL NOT BE FREE FROM FLOODING AND DAMAGE. LARGER FLOODS THAN THOSE PREDICATED ON SAID MAP MAY OCCUR AND FLOOD HEIGHTS MAY BE INCREASED BY MAN-MADE OR NATURAL CAUSES. THE FLOOD INSURANCE RATE MAP "IS FOR INSURANCE PURPOSES ONLY" AND ANY DAMAGES THAT MAY RESULT FROM RELIANCE ON THIS FLOOD ZONE DETERMINATION SHALL NOT CREATE LIABILITY ON THE PART OF THE SURVEYOR. THE FLOOD ZONE LINES (IF ANY) SHOWN HEREON ARE APPROXIMATE AND ARE BASED UPON A SCALED INTERPRETATION FROM THE FLOOD INSURANCE RATE MAP AS PUBLISHED BY THE FEDERAL EMERGENCY MANAGEMENT AGENCY.

13.) A DIG TICKET WAS SUBMITTED WITH SUNSHINE STATE ONE CALL OF FLORIDA ON JUNE 8, 2015, TICKET I.D. NUMBER 159502539. THE UNDERGROUND UTILITIES, IF ANY, SHOWN HEREON ARE BASED ON ANY SUBSEQUENT FIELD MARKINGS OR DELINEATIONS PERFORMED BY THE AFFECTED UTILITY PROVIDERS, AND WERE LOCATED BY A FIELD SURVEY AND ONLY LOCATED AS SHOWN HEREON. ONLY THE UNDERGROUND UTILITIES WHICH WERE VISIBLE FROM GROUND LEVEL TO THE SURVEYOR ON THE ACTUAL DAY OF THE FIELD SURVEY WERE LOCATED AND ANY UNDERGROUND UTILITIES NOT FIELD MARKED OR DELINEATED ON THE GROUND ARE NOT SHOWN HEREON. NO EXCAVATIONS OR SUBSURFACE WORK EFFORTS OF ANY KIND WERE PERFORMED BY GEORGE A. SHIMP II & ASSOCIATES, INC. TO VERIFY THE EXISTENCE OF ANY UNDERGROUND UTILITIES. THE SURVEYOR MAKES NO GUARANTEE THAT THE UNDERGROUND UTILITIES SHOWN COMPRISE ALL SUCH UTILITIES IN THE AREA, EITHER IN SERVICE OR ABANDONED.

14.) UNLESS OTHERWISE SHOWN, THIS SURVEY DOES NOT REFLECT OR DETERMINE OWNERSHIP LINES, LINES AFFECTED BY ADVERSE USE, LINES OF CONFLICTING/OVERLAPPING DEEDS, OR OTHER LINES THAT MAY OTHERWISE BE DETERMINED BY A COURT OF LAW.

15.) NO INFORMATION ON ADJOINING PROPERTY OWNERS OR ADJOINING PROPERTY RECORDING INFORMATION WAS PROVIDED TO THE SURVEYOR.

16.) BECAUSE OF THE POSSIBILITY OF MOVEMENT OF THE MONUMENTATION FROM ITS ORIGINAL PLACEMENT BY PERSONS OTHER THAN THE SURVEYOR, IT IS RECOMMENDED THAT PRIOR TO ANY NEW IMPROVEMENTS ON THE PROPERTY THAT THE POSITION OF THE MONUMENTATION BE VERIFIED.

17.) FENCES AND WALLS (IF ANY) SHOWN ALONG THE BOUNDARIES OF THIS SURVEY ARE EXAGGERATED FOR CLARITY AND OWNERSHIP IS NOT DETERMINED. THE TIES AT THE PROPERTY CORNERS OR AT SPECIFICALLY DESIGNATED POINTS ARE BASED UPON FIELD LOCATIONS. FENCES AND WALLS ALONG OTHER PROPERTY BOUNDARIES MEANDER AND ARE APPROXIMATE. PRIOR TO THE RECONSTRUCTION OF ANY FENCES OR WALLS, IT WOULD BE PRUDENT TO HAVE THE BOUNDARY LINE STAKED.

18.) THE PRINTED DIMENSIONS SHOWN ON THIS SURVEY SUPERSEDE ANY SCALED DIMENSIONS. THERE MAY BE ITEMS DRAWN OUT OF SCALE TO GRAPHICALLY SHOW THEIR LOCATION.

19.) THIS SURVEY IS A REPRESENTATION OF EXISTING FIELD CONDITIONS AT THE TIME OF THE FIELD SURVEY AND UNLESS OTHERWISE SHOWN, IS BASED ON EXISTING SURVEY MONUMENTATION AS FOUND IN THE FIELD.

20.) THE ACCURACY OF THIS SURVEY, AS OBTAINED BY FIELD-MEASURED CONTROL MEASUREMENTS AND CALCULATIONS, MEETS OR EXCEEDS THE MINIMUM RELATIVE DISTANCE ACCURACY REQUIREMENT AS SPECIFIED IN THE MINIMUM TECHNICAL STANDARDS (5J-17, FLORIDA ADMINISTRATIVE CODE).

21.) THIS SURVEY IS BEING CERTIFIED ACCORDING TO THE LAST DATE OF FIELD SURVEY AND NOT THE SIGNATURE DATE (IF ANY).

22.) THIS SURVEY SHALL NOT BE FILED FOR PUBLIC RECORDS WITHOUT THE KNOWLEDGE AND THE EXPRESSED, WRITTEN CONSENT OF THE SURVEYOR.

23.) UNLESS OTHERWISE SHOWN, THE DIMENSIONS SHOWN HEREON ARE IN FEET AND DECIMAL PARTS THEREOF AND ARE BASED ON THE DEFINITION OF A FOOT AS ADOPTED BY THE UNITED STATES BUREAU OF STANDARDS AND REFER TO THE HORIZONTAL PLANE.

24.) TREES BY NATURE ARE IRREGULAR IN SHAPE AND SIZE AND EVERY EFFORT IS MADE TO ACCURATELY LOCATE THEM. THE TREE SIZE IS DETERMINED AT CHEST HEIGHT DIAMETER AND THE TREE LOCATION IS CENTER OF THE TREE TRUNK. ANY TREE LOCATIONS THAT ARE CRITICAL TO DESIGN SHOULD BE FIELD VERIFIED. EVERY EFFORT HAS BEEN MADE TO PROPERLY IDENTIFY THE TREES SHOWN HEREON. HOWEVER, TREE IDENTIFICATION IS OUTSIDE THE AREA OF EXPERTISE OF A PROFESSIONAL SURVEYOR AND MAPPER, THEREFORE, THE SURVEYOR ACCEPTS NO RESPONSIBILITY FOR IDENTIFICATION OF TREE SPECIES. ALL TREE TYPES SHOWN ARE FOR INFORMATIONAL PURPOSES ONLY AND ANY TREE SPECIES THAT ARE CRITICAL SHOULD BE VERIFIED BY A CERTIFIED ARBORIST.

25.) THIS SURVEY SHALL NOT BE USED WITH A SURVEY AFFIDAVIT. AN INCORRECT SURVEY AFFIDAVIT CAN INCREASE THE OWNER/BUYER'S LIABILITY, DECREASE THEIR LEGAL RIGHTS AND PROTECTIONS WHICH ARE AFFORDED BY A CURRENT SURVEY AND MAY RESULT IN COSTLY LITIGATION AS WELL. AN INCORRECT SURVEY AFFIDAVIT CAN BE THE RESULT OF CHANGES MADE TO THE PROPERTY SINCE THE DATE OF THE LAST SURVEY, WHICH MAY INCLUDE IMPROVEMENTS MADE BY THE OWNER, ADJACENT OWNERS OR UTILITY COMPANIES OR CHANGES IN THE SURVEY BOUNDARY MONUMENTATION. USE OF THIS SURVEY BY A LENDING INSTITUTION OR TITLE COMPANY IN CONJUNCTION WITH A SURVEY AFFIDAVIT IS STRICTLY PROHIBITED AND SHALL RENDER THIS SURVEY NULL AND VOID.

26.) THE ZONING AND SETBACK INFORMATION SHOWN HEREON IS BASED ON INFORMATION AVAILABLE DURING THE PREPARATION OF THIS SURVEY AND MAY BE SUBJECT TO FLEXIBLE DEVELOPMENT STANDARDS AND OTHER REQUIREMENTS AND GUIDELINES. THIS INFORMATION SHOULD BE VERIFIED WITH THE GOVERNING AUTHORITY PRIOR TO ANY DETERMINATIONS OR DESIGN.

27.) BENCH MARK: THE ELEVATIONS SHOWN HEREON ARE BASED ON THE NORTH AMERICAN VERTICAL DATUM OF 1988 (N.A.V.D. 1988) AS ESTABLISHED FROM N.G.S. BENCHMARK "V 659", HAVING AN ELEVATION OF 9.02 FEET N.A.V.D. 1988. TO CONVERT ELEVATIONS TO THE NATIONAL GEODETIC VERTICAL DATUM OF 1929 (N.G.V.D. 1929), ADD 0.85 FEET.

28.) PARCELS 1 AND 2 ARE CONTIGUOUS TO EACH OTHER ALONG THEIR COMMON BOUNDARIES AND THERE ARE NO GAPS, GORES OR HIATUS BETWEEN SAID PARCELS.

29.) THE LAND SHOWN ON THIS SURVEY IS THE SAME AS THAT DESCRIBED IN THE CHICAGO TITLE INSURANCE COMPANY TITLE COMMITMENT, ORDER NUMBER 5321554 WITH AN EFFECTIVE DATE OF JUNE 11, 2015.

NOTES CORRESPONDING TO SCHEDULE B, SECTION II

CHICAGO TITLE INSURANCE COMPANY TITLE COMMITMENT, COMMITMENT ORDER NUMBER 5321554, DATED JUNE 11, 2015

6.) THE MORTGAGE DEED AND SECURITY AGREEMENT, AS RECORDED IN O.R. BOOK 3910, PAGE 1301, AS AFFECTED BY O.R. BOOK 5541, PAGE 1800, O.R. BOOK 8401, PAGE 490, O.R. BOOK 3910, PAGE 1306, O.R. BOOK 3910, PAGE 1310, O.R. BOOK 5330, PAGE 544, O.R. BOOK 7697, PAGE 1786, O.R. BOOK 8767, PAGE 1040, O.R. BOOK 8401, PAGE 500, O.R. BOOK 8401, PAGE 504 AND O.R. BOOK 9192, PAGE 2321, AFFECTS THE SITE (DOES NOT CONTAIN ANY PLOTTABLE SURVEY MATTERS).

ZONING and SETBACK NOTES

1.) ZONED: C2 (GENERAL COMMERCIAL)

2.) BUILDING SETBACKS:

FRONT: 25 FEET
SIDES: 0 FEET
REAR: 0 FEET

NOTE: THE ABOVE DATA WAS OBTAINED FROM THE PASCO COUNTY LAND DEVELOPMENT CODE.

© COPYRIGHT 2015
ALL RIGHTS RESERVED
George A. Shimp II & Associates, Inc.
Anyone copying this document in any manner without the expressed consent of GEORGE A. SHIMP II & ASSOCIATES, INC. shall be prosecuted to the full extent of the law.
DO NOT COPY OR REPRODUCE

ALTA/ACSM LAND TITLE SURVEY (L/C # 9-2596) - SHEET 1 OF 2

REVISIONS

DATE	REVISION MADE	JOB NUMBER	DRAWING FILE
8-13-2015	ADDITIONAL TOPOGRAPHY (ROUTE SURVEY)	150164A	150164A.DWG
9-2-2015	REVISED U.S. 19 RIGHT-OF-WAY DATA	150164A	150164A-1.DWG

CERTIFICATION: I HEREBY CERTIFY TO THE BEST OF MY KNOWLEDGE AND BELIEF THAT THE SURVEY SHOWN HEREON SUBSTANTIALLY MEETS THE MINIMUM TECHNICAL STANDARDS FOR LAND SURVEYING DESCRIBED IN THE STATE OF FLORIDA RULE 5J-17, F.A.C. FURTHERMORE, THIS CERTIFICATION SHALL NOT EXTEND TO ANY OTHER PERSONS OR PARTIES OTHER THAN THOSE NAMED ON THIS SURVEY AND SHALL NOT BE VALID AND BINDING AGAINST THE UNDERSIGNED SURVEYOR WITHOUT THE ORIGINAL RAISED SEAL AND SIGNATURE OF THE FLORIDA LICENSED SURVEYOR AND MAPPER.

George A. Shimp III
GEORGE A. SHIMP III, PROFESSIONAL SURVEYOR & MAPPER No. 6137

JOB NUMBER: 150164	DATE SURVEYED: 6-11-2015
DRAWING FILE: 150164.DWG	DATE DRAWN: 6-22-2015
LAST REVISION: 9-2-2015	X REFERENCE: N/A

GEORGE A. SHIMP II AND ASSOCIATES, INCORPORATED
LAND SURVEYORS LAND PLANNERS
3301 DeSOTO BOULEVARD, SUITE D
PALM HARBOR, FLORIDA 34683
PHONE (727) 784-5496 FAX (727) 786-1256
T.S. LB 1834

McDonald's

11929 U.S. HIGHWAY No. 19
SECTION 9, TOWNSHIP 25 SOUTH, RANGE 16 EAST
PORT RICHEY, PASCO COUNTY, FLORIDA

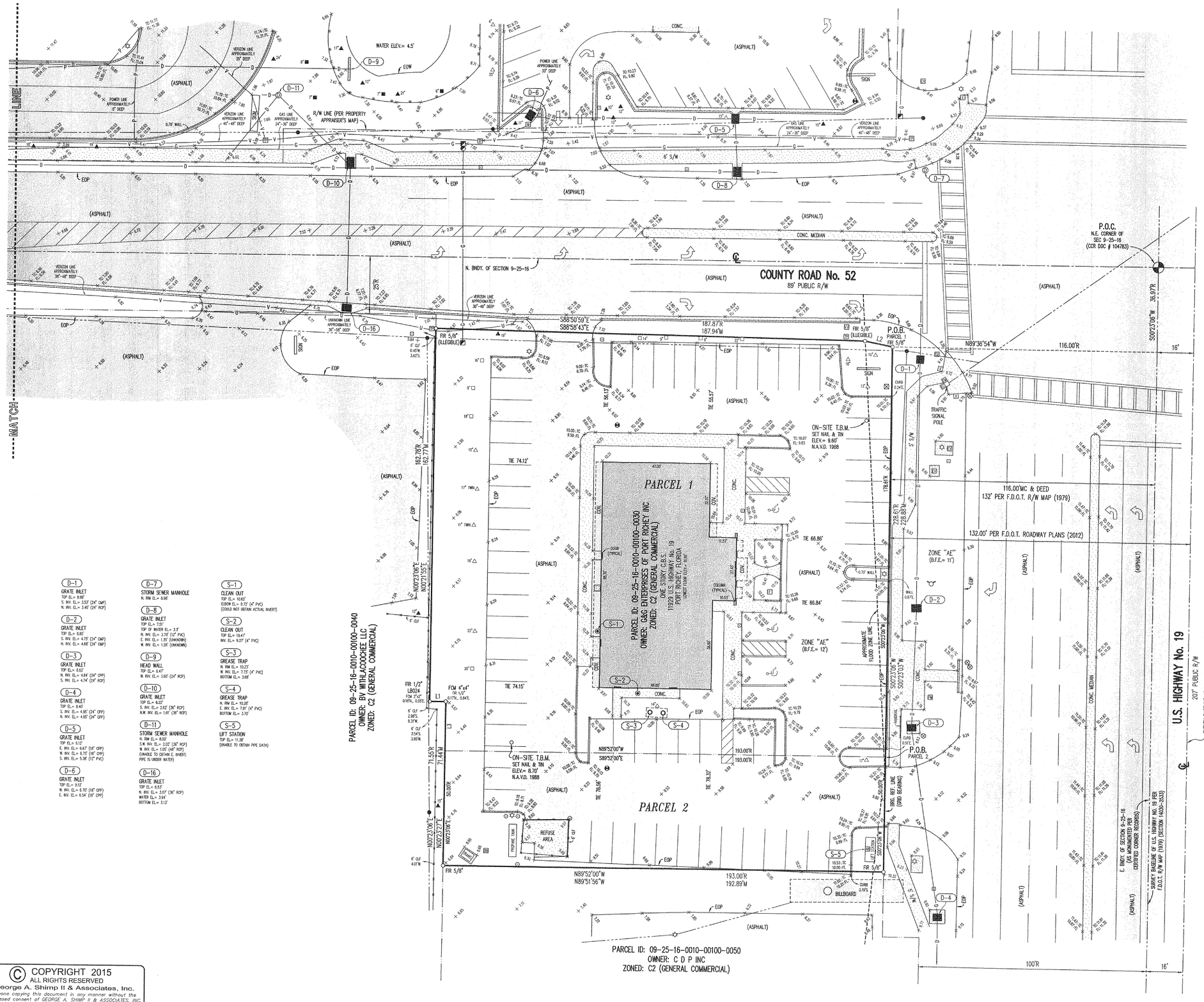

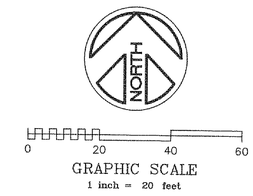

PARKING SPACE TABLE	
	EXISTING
STANDARD	71
HANDICAPPED	3
TOTAL	74

LINE L1
N89°52'00"W – 7.00'R
S89°46'36"W – 7.07'M

LINE L2
S78°42'07"E – 12.36'R
S78°41'59"E – 12.29'M

LINE L3
N00°23'06"E – 21.55'R

LEGEND

- ALARM BOX
- BOLLARD
- BREAKER BOX
- CABLE VAULT
- CROSS WALK SIGNAL
- ELECTRIC BOX
- ELECTRIC CABINET
- ELECTRIC METER
- ELECTRIC VAULT
- 8.00 – ELEVATION
- FIBER OPTIC MARKER
- FIRE HYDRANT
- FLAG POLE
- GAS MARKER
- GAS VALVE
- GRATE INLET
- GREASE TRAP
- LIGHT POLE
- MIRROR
- MITERED END SECTION
- MONITORING WELL
- POWER POLE
- SEWER CLEAN OUT
- STORM SEWER MANHOLE
- SIGN
- TELEPHONE BOX
- TELEPHONE PEDESTAL
- TRAFFIC SIGNAL VAULT
- VERIZON VAULT
- WATER METER
- WATER VALVE
- GUY WIRE
- OVERHEAD WIRES
- TOP OF BANK
- G – U.G. GAS LINE
- P – U.G. POWER LINE
- D – U.G. STORM SEWER LINE
- U – U.G. UNKNOWN UTILITY LINE
- V – U.G. VERIZON LINE
- 2.0' CURB & GUTTER
- 0.50' UPRIGHT CURB
- 06" CYPRESS
- 06" OAK
- 06" PALM
- 06" SWEETGUM

D-1
GRATE INLET
TOP EL.= 8.68'
S. INV. EL.= 3.53' (24" CMP)
N. INV. EL.= 3.45' (24" RCP)

D-2
GRATE INLET
TOP EL.= 8.65'
S. INV. EL.= 4.75' (24" CMP)
N. INV. EL.= 4.68' (24" CMP)

D-3
GRATE INLET
TOP EL.= 8.62'
N. INV. EL.= 4.84' (24" CPP)
S. INV. EL.= 4.74' (24" RCP)

D-4
GRATE INLET
TOP EL.= 8.40'
S. INV. EL.= 4.95' (24" CPP)
N. INV. EL.= 4.85' (24" CPP)

D-5
GRATE INLET
TOP EL.= 9.12'
E. INV. EL.= 6.67' (18" CPP)
W. INV. EL.= 6.75' (18" CPP)
S. INV. EL.= 5.38' (12" PVC)

D-6
GRATE INLET
TOP EL.= 9.12'
W. INV. EL.= 6.70' (18" CPP)
E. INV. EL.= 6.54' (18" CPP)

D-7
STORM SEWER MANHOLE
N. RIM EL.= 8.58'

D-8
GRATE INLET
TOP EL.= 7.51'
TOP OF WATER EL.= 3.3'
N. INV. EL.= 3.70' (12" PVC)
E. INV. EL.= 1.35' (UNKNOWN)
W. INV. EL.= 1.25' (UNKNOWN)

D-9
HEAD WALL
TOP EL.= 8.47'
W. INV. EL.= 3.65' (24" RCP)

D-10
GRATE INLET
TOP EL.= 8.22'
S. INV. EL.= 2.62' (36" RCP)
N.W. INV. EL.= 1.61' (36" RCP)

D-11
STORM SEWER MANHOLE
N. RIM EL.= 8.03'
S.W. INV. EL.= 2.02' (36" RCP)
N. INV. EL.= 1.05' (48" RCP)
(UNABLE TO OBTAIN E. INVERT; PIPE IS UNDER WATER)

D-16
GRATE INLET
TOP EL.= 6.53'
N. INV. EL.= 3.03' (36" RCP)
WATER EL.= 3.94'
BOTTOM EL.= 3.13'

S-1
CLEAN OUT
TOP EL.= 10.62'
ELBOW EL.= 9.72' (4" PVC)
(COULD NOT OBTAIN ACTUAL INVERT)

S-2
CLEAN OUT
TOP EL.= 10.47'
INV. EL.= 9.37' (4" PVC)

S-3
GREASE TRAP
N. RIM EL.= 10.23'
W. INV. EL.= 7.73' (4" PVC)
BOTTOM EL.= 3.68'

S-4
GREASE TRAP
N. RIM EL.= 10.26'
E. INV. EL.= 7.91' (4" PVC)
BOTTOM EL.= 3.70'

S-5
LIFT STATION
TOP EL.= 11.38'
(UNABLE TO OBTAIN PIPE DATA)

ALTA/ACSM LAND TITLE SURVEY (L/C # 9-2596) - SHEET 2 OF 2

CERTIFICATION: I HEREBY CERTIFY TO THE BEST OF MY KNOWLEDGE AND BELIEF THAT THE SURVEY SHOWN HEREON SUBSTANTIALLY MEETS THE MINIMUM TECHNICAL STANDARDS FOR LAND SURVEYING DESCRIBED IN THE STATE OF FLORIDA RULE 5J-17, F.A.C. FURTHERMORE, THIS CERTIFICATION SHALL NOT EXTEND TO ANY OTHER PERSONS OR PARTIES OTHER THAN THOSE NAMED ON THIS SURVEY AND SHALL NOT BE VALID AND BINDING AGAINST THE UNDERSIGNED SURVEYOR WITHOUT THE ORIGINAL RAISED SEAL AND SIGNATURE OF THE FLORIDA LICENSED SURVEYOR AND MAPPER.

STATE OF FLORIDA

George A. Shimp III

GEORGE A. SHIMP III, PROFESSIONAL SURVEYOR & MAPPER No. 6137

JOB NUMBER: 150164	DATE SURVEYED: 6-11-2015
DRAWING FILE: 150164.DWG	DATE DRAWN: 6-22-2015
LAST REVISION: 9-2-2015	X REFERENCE: N/A

GEORGE A. SHIMP II AND ASSOCIATES, INCORPORATED
LAND SURVEYORS LAND PLANNERS
3301 DeSOTO BOULEVARD, SUITE D
PALM HARBOR, FLORIDA 34683
PHONE (727) 784-5496 FAX (727) 786-1256
T.S. LB 1834

© COPYRIGHT 2015
ALL RIGHTS RESERVED
George A. Shimp II & Associates, Inc.
Anyone copying this document in any manner without the expressed consent of GEORGE A. SHIMP II & ASSOCIATES, INC. shall be prosecuted to the full extent of the law.
—— DO NOT COPY OR REPRODUCE ——

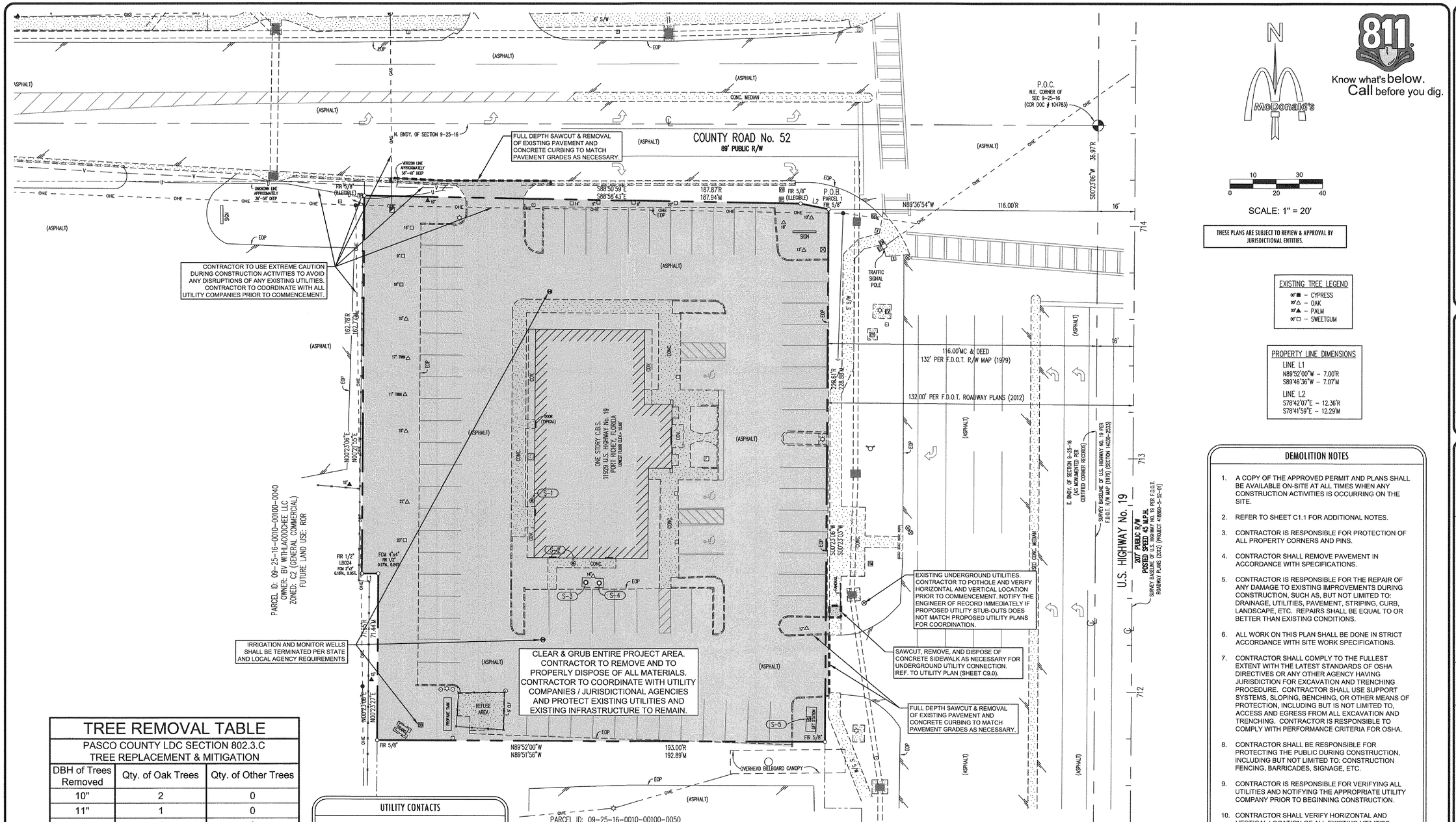

811 Know what's below. Call before you dig.

0 10 20 30 40

SCALE: 1" = 20'

THESE PLANS ARE SUBJECT TO REVIEW & APPROVAL BY JURISDICTIONAL ENTITIES.

EXISTING TREE LEGEND

- 00" ■ – CYPRESS
- 00" △ – OAK
- 00" ▲ – PALM
- 00" □ – SWEETGUM

PROPERTY LINE DIMENSIONS

LINE L1
N89°52'00"W – 7.00'R
S89°46'36"W – 7.07'M

LINE L2
S78°42'07"E – 12.36'R
S78°41'59"E – 12.29'M

TREE REMOVAL TABLE

PASCO COUNTY LDC SECTION 802.3.C
TREE REPLACEMENT & MITIGATION

DBH of Trees Removed	Qty. of Oak Trees	Qty. of Other Trees
10"	2	0
11"	1	0
13"	1	0
14"	1	1
16"	0	1
17"	2	0
18"	1	1
19"	1	1
20"	0	1
22"	1	1
Total tree inches removed	151" of Oak Trees	109" of Other Trees
Tree Replacement Required	151" inches (1:1 ratio)	37" inches (1:3 ratio)

REFER TO SHEET L1.0 LANDSCAPE PLAN FOR TREE REPLACEMENTS CALCULATIONS

UTILITY CONTACTS

WATER & SEWER:
PASCO COUNTY UTILITIES DEPARTMENT
7536 STATE STREET, SUITE 205
NEW PORT RICHEY, FLORIDA 34654
ATTN: GEORGEANN BENNETT
PHONE: (727) 847-8145

ELECTRIC:
WITHLACHOOCHEE RIVER ELECTRIC COOPERATIVE
12013 HAYS ROAD
SHADY HILLS, FLORIDA 34610
ATTN: JEFF RATLIFF
PHONE: (727) 868-9465 EXT. 2133

TELEPHONE:
VERIZON
1280 CLEVELAND STREET
CLEARWATER, FLORIDA 33755
ATTN: DAN SULLIVAN
PHONE: (727) 562-1190

GAS:
TECO/PEOPLES GAS
1400 CHANNELSIDE DRIVE
TAMPA, FLORIDA 33605
ATTN: KEN MIRACOLA
PHONE: (813) 927-7719

CULTURAL RESOURCES NOTES

- IF DURING CONSTRUCTION ACTIVITIES ANY EVIDENCE OF HISTORIC RESOURCES, INCLUDING BUT NOT LIMITED TO ABORIGINAL OR HISTORIC POTTERY, PREHISTORIC STONE TOOLS, BONE OR SHELL TOOLS, HISTORIC TRASH PITS, OR HISTORIC BUILDING FOUNDATION, ARE DISCOVERED, WORK SHALL COME TO AN IMMEDIATE STOP AND THE FLORIDA DEPARTMENT OF HISTORIC RESOURCES (STATE HISTORIC PRESERVATION OFFICER) AND PASCO COUNTY SHALL BE NOTIFIED WITHIN TWO WORKING DAYS OF THE RESOURCES FOUND ON THE SITE.
- IF DURING CONSTRUCTION ACTIVITIES ANY EVIDENCE OF THE PRESENCE OF STATE AND FEDERALLY PROTECTED PLANT AND/OR ANIMAL SPECIES IS DISCOVERED, WORK SHALL COME TO AN IMMEDIATE STOP AND PASCO COUNTY SHALL BE NOTIFIED WITHIN TWO WORKING DAYS OF THE PLANT AND/OR ANIMAL SPECIES FOUND ON THE SITE.

DEMOLITION NOTES

1. A COPY OF THE APPROVED PERMIT AND PLANS SHALL BE AVAILABLE ON-SITE AT ALL TIMES WHEN ANY CONSTRUCTION ACTIVITIES IS OCCURRING ON THE SITE.
2. REFER TO SHEET C1.1 FOR ADDITIONAL NOTES.
3. CONTRACTOR IS RESPONSIBLE FOR PROTECTION OF ALL PROPERTY CORNERS AND PINS.
4. CONTRACTOR SHALL REMOVE PAVEMENT IN ACCORDANCE WITH SPECIFICATIONS.
5. CONTRACTOR IS RESPONSIBLE FOR THE REPAIR OF ANY DAMAGE TO EXISTING IMPROVEMENTS DURING CONSTRUCTION, SUCH AS, BUT NOT LIMITED TO: DRAINAGE, UTILITIES, PAVEMENT, STRIPING, CURB, LANDSCAPE, ETC. REPAIRS SHALL BE EQUAL TO OR BETTER THAN EXISTING CONDITIONS.
6. ALL WORK ON THIS PLAN SHALL BE DONE IN STRICT ACCORDANCE WITH SITE WORK SPECIFICATIONS.
7. CONTRACTOR SHALL COMPLY TO THE FULLEST EXTENT WITH THE LATEST STANDARDS OF OSHA DIRECTIVES OR ANY OTHER AGENCY HAVING JURISDICTION FOR EXCAVATION AND TRENCHING PROCEDURE. CONTRACTOR SHALL USE SUPPORT SYSTEMS, SLOPING, BENCHING, OR OTHER MEANS OF PROTECTION, INCLUDING BUT IS NOT LIMITED TO, ACCESS AND EGRESS FROM ALL EXCAVATION AND TRENCHING. CONTRACTOR IS RESPONSIBLE TO COMPLY WITH PERFORMANCE CRITERIA FOR OSHA.
8. CONTRACTOR SHALL BE RESPONSIBLE FOR PROTECTING THE PUBLIC DURING CONSTRUCTION, INCLUDING BUT NOT LIMITED TO: CONSTRUCTION FENCING, BARRICADES, SIGNAGE, ETC.
9. CONTRACTOR IS RESPONSIBLE FOR VERIFYING ALL UTILITIES AND NOTIFYING THE APPROPRIATE UTILITY COMPANY PRIOR TO BEGINNING CONSTRUCTION.
10. CONTRACTOR SHALL VERIFY HORIZONTAL AND VERTICAL LOCATION OF ALL EXISTING UTILITIES PRIOR TO CONSTRUCTION AND NOTIFY THE ENGINEER OF RECORD OF ANY UTILITY CONFLICTS.
11. CONTRACTOR SHALL SECURE DEMOLITION PERMIT FROM JURISDICTIONAL AGENCY PRIOR TO MOBILIZATION.
12. THE CONTRACTOR SHALL CREATE AMPLE STAGING AND STOCKPILING AREAS FOR TREE TRANSPLANTS, CRUSHED CONCRETE, TOPSOIL, ETC. IN ACCORDANCE WITH COUNTY SPECIFICATIONS.

LEGEND

AREA OF REMOVAL (PAVEMENT, BUILDINGS, UNDERGROUND UTILITIES, CURBS, SIGNS, LIGHT POLES, LIGHT FIXTURES, ETC. UNLESS OTHERWISE NOTED.

SAWCUT LINE

REV	DATE	DESCRIPTION	BY	ISSUE REF

Adams
27524 Oakland Circle, Suite 101 ■ Wesley Chapel, Florida 33544 ■ (813) 920-7499

TIM D. HODES LICENSE No 67017 STATE OF FLORIDA PROFESSIONAL ENGINEER
9-22-15

Certificate Of Authorization: #27614

MCDONALD'S L/C: 009-2596

McDonald's USA, LLC

These drawings and specifications are the confidential and proprietary property of McDonald's USA, LLC and shall not be reproduced without written consent of McDonald's USA, LLC. They are transmitted only for use on a specific site in conjunction with its issue date and are not suitable for use on a different site or at a later time. Use of these drawings for reference or example on another project requires the services of properly licensed architects and engineers. Reproduction of the contract documents for reuse on another project is not authorized.

OFFICE: FLORIDA REGION
ADDRESS: KROC DRIVE - OAK BROOK, ILLINOIS 60521

11929 US HIGHWAY 19
PORT RICHEY, FLORIDA

PLAN APPROVALS

SIGNATURE (2 REQUIRED)	DATE
REGIONAL MGR.	
CONST. MGR.	
OPERATIONS DEPT.	
REAL ESTATE DEPT.	

CO-SIGN SIGNATURES

CONTRACTOR	
OWNER	

ADAMS JOB NO.	2014.086	
STATUS	DATE	BY
DATE DRAWN	SEPT 2015	EAO
PLAN CHECKED	SEPT 2015	TDH
AS-BUILT		

DEMO PLAN

C2.0

© Copyright 2015, Adams Engineering

FULL PATH: _Projects\2014\2014.086_McD_Hudson Hills - Pasco FL\Drawings\03 - Production\C2.0 DEMO PLAN
PLOTTER: Adobe PDF
PLOT DATE: Tuesday, September 22, 2015
PLOT TIME: 5:26:17 PM
PLOTTED BY: Edgar Ortiz
FILENAME: C2.0 DEMO PLAN.dwg

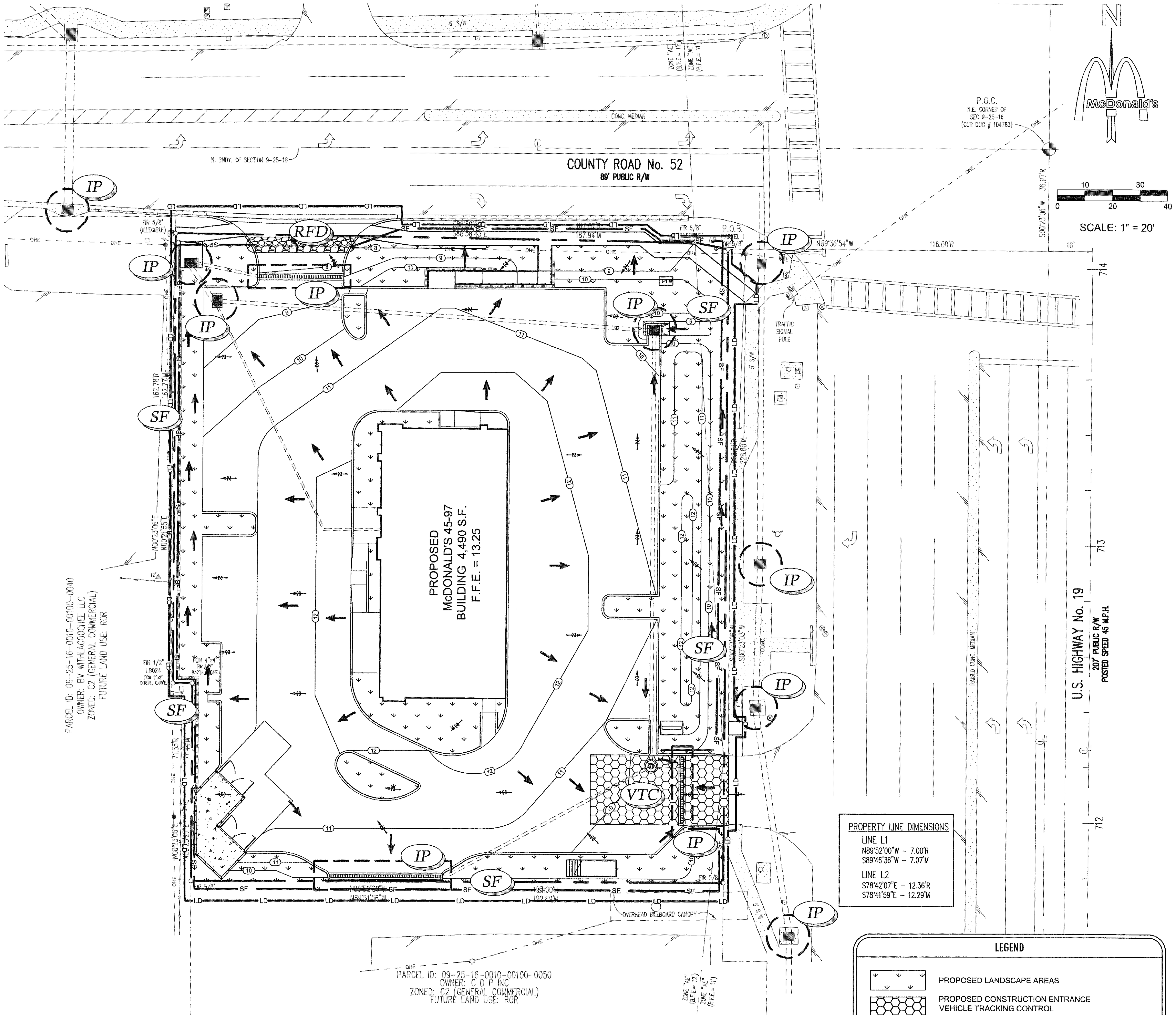

SWPPP NOTES

1. THE FLORIDA GENERIC PERMIT FOR CONSTRUCTION ACTIVITIES REQUIRES THAT THE PERMITTEE REVISE OR UPDATE THIS SWPPP WHENEVER THERE IS A CHANGE IN DESIGN, CONSTRUCTION, OPERATION, OR MAINTENANCE, OR WHENEVER THE RESULT OF AN INSPECTION INDICATES THAT THIS SWPPP IS INEFFECTIVE IN ELIMINATING OR SIGNIFICANTLY MINIMIZING POLLUTANTS IN STORM WATER DISCHARGES. HOWEVER, THE REGULATIONS OF THE FLORIDA BOARD OF PROFESSIONAL ENGINEERS REQUIRE THAT CHANGES MADE BY THE CONTRACTOR DURING CONSTRUCTION MUST BE AUTHORIZED BY A LICENSED FLORIDA ENGINEER. THESE CHANGES MAY BE AUTHORIZED BY THE ENGINEER OF RECORD THROUGH UPDATED DRAWINGS, WORK ORDER CHANGES, OR OTHER METHODS ACCEPTABLE TO THE ENGINEER; OR BY ANOTHER ENGINEER PROVIDED THAT THEY NOTIFY THE ENGINEER OF RECORD

2. ALL MEASURES STATED ON THIS EROSION AND SEDIMENT CONTROL PLAN, AND IN THE STORM WATER POLLUTION PREVENTION PLAN, SHALL BE MAINTAINED IN FULLY FUNCTIONAL CONDITION UNTIL NO LONGER REQUIRED FOR A COMPLETED PHASE OF WORK OR FINAL STABILIZATION OF THE SITE. ALL EROSION AND SEDIMENTATION CONTROL MEASURES SHALL BE CHECKED BY A QUALIFIED PERSON ON A SCHEDULE WHICH COMPLIES WITH THE GENERAL PERMIT REQUIREMENTS AND CLEANED AND REPAIRED WITHIN 48 HOURS OF THE INSPECTION IN ACCORDANCE WITH THE FOLLOWING:
   a. INLET PROTECTION DEVICES AND BARRIERS SHALL BE REPAIRED OR REPLACED IF THEY SHOW SIGNS OF UNDERMINING, OR DETERIORATION.
   b. ALL SEEDED AREAS SHALL BE CHECKED REGULARLY TO SEE THAT A GOOD STAND IS MAINTAINED. AREAS SHOULD BE FERTILIZED, WATERED AND RESEEDED AS NEEDED.
   c. SILT FENCES SHALL BE REPAIRED TO THEIR ORIGINAL CONDITIONS IF DAMAGED. SEDIMENT SHALL BE REMOVED FROM THE SILT FENCES WHEN IT REACHES ONE-THIRD THE HEIGHT OF THE SILT FENCE.
   d. THE TEMPORARY PARKING AND STORAGE AREA (IF PRESENT) SHALL BE KEPT IN GOOD CONDITION (SUITABLE FOR PARKING AND STORAGE). THIS MAY REQUIRE PERIODIC TOP DRESSING OF THE TEMPORARY PARKING AS CONDITIONS DEMAND.
   e. OUTLET STRUCTURES IN THE SEDIMENTATION BASINS OR SEDIMENT TRAPS (IF PRESENT) SHALL BE MAINTAINED IN OPERATIONAL CONDITION AT ALL TIMES. SEDIMENT SHALL BE REMOVED FROM SEDIMENT BASINS OR TRAPS WHEN THE DESIGN CAPACITY HAS BEEN REDUCED BY 10%.
   f. MAINTENANCE PROCEDURES FOR THE EROSION AND SEDIMENTATION CONTROL SYSTEMS SPECIFIED ARE PROVIDED ON THE STORM WATER POLLUTION PREVENTION PLAN.

EROSION CONTROL SEQUENCE

1. INSTALL SILT FENCES AROUND PERIMETER OF PROPERTY AND DISTURBED AREAS AS SHOWN.
2. INSTALL INLET PROTECTION FOR ALL EXISTING GRATE INLETS, CURB INLETS AND AT THE ENDS OF ALL EXPOSED STORM SEWER PIPES, IF PRESENT INSTALL ROCK FILTER DAMS WHERE SHOWN.
3. CONSTRUCT TEMPORARY CONSTRUCTION ENTRANCE/EXIT. MONITOR STREET DAILY & CLEAN REGULARLY.
4. COMMENCE DEMOLITION, GRUBBING, AND REMOVAL OF VEGETATION IN AREA TO RECEIVE CUT OR FILL.
5. COMMENCE GRADING OPERATION FOR BUILDING PAD PREPARATION (SEE GRADING PLAN).
6. INSTALL ALL UNDERGROUND UTILITIES.
7. FINALIZE PAVEMENT SUBGRADE PREPARATION.
8. INSTALL ALL PROPOSED STORM SEWER PIPES AND INSTALL INLET PROTECTION SILT FENCES AT ENDS OF EXPOSED PIPES.
9. CONSTRUCT ALL GRATE INLETS AND DRAINAGE STRUCTURES. INLET PROTECTION SILT FENCES MAY BE REMOVED TEMPORARILY FOR THIS CONSTRUCTION.
10. REMOVE SILT FENCES AROUND INLETS AND MANHOLES NO MORE THAN 48 HOURS PRIOR TO PLACING STABILIZED BASE COURSE.
11. INSTALL BASE MATERIAL AS REQUIRED FOR PAVEMENT, CURB & GUTTER.
12. INSTALL ALL PAVING, CURB & GUTTER.
13. REMOVE TEMPORARY CONSTRUCTION EXIT, ROCK FILTER DAMS, & SILT FENCES.
14. COMPLETE PLANTING AND/OR SEEDING OF VEGETATED AREAS TO ACCOMPLISH STABILIZATION, IN ACCORDANCE WITH THE LANDSCAPING PLAN.

EROSION CONTROL NOTES

1. CONTRACTOR MUST REQUEST COVERAGE UNDER THE FLORIDA GENERIC PERMIT FOR CONSTRUCTION ACTIVITIES. IN ORDER TO USE THE GENERIC PERMIT, FOR SITE WHICH DISTURB 1 OR MORE ACRES, A NOTICE OF INTENT (NOI) FORM MUST BE COMPLETED AND MAILED TO THE FLORIDA DEPARTMENT OF ENVIRONMENTAL PROTECTION (AT LEAST 48 HOURS PRIOR TO ANY EARTH DISTRUBING ACTIVITIES). THE GENERAL CONTRACTOR, (AND ALL SUBCONTRACTORS INVOLVED WITH ANY CONSTRUCTION ACTIVITY RELATED TO EARTHWORK, EROSION CONTROL., ETC., OR WHICH UTILIZE POSSIBLE POLLUTANTS AS DEFINED IN THE NPDES GENERIC PERMIT) MUST BE FAMILIAR WITH THE CONTENTS OF THE STORM WATER POLLUTION PREVENTION PLAN (SWPPP) AS WELL AS ALL THE REQUIREMENTS SET FORTH IN THE NPDES GENERIC PERMIT AND ANY APPLICABLE LOCAL PERMIT REQUIREMENTS. AND SHALL COMPLY WITH ALL SUCH REQUIREMENTS DURING ALL CONSTRUCTION ACTIVITIES.

2. THE CONTRACTOR SHALL ADHERE TO THE SEQUENCE OF OPERATIONS FOR EROSION CONTROL IMPLEMENTATION SHOWN HEREON. ANY DEVIATION FROM THIS SEQUENCE DEEMED NECESSARY BY THE CONTRACTOR MAY REQUIRE THAT THE STORMWATER POLLUTION PREVENTION PLAN BE MODIFIED IN ACCORDANCE WITH THE NPDES GENERIC PERMIT GUIDELINES AND THE STORM WATER POLLUTION PREVENTION PLAN.

3. THE CONTRACTOR SHALL MODIFY THIS PLAN TO SHOW LOCATIONS OF TEMPORARY WASHDOWN AREAS, PORTABLE TOILETS, EQUIPMENT MAINTENANCE/REPAIR AREAS, STOCKPILE AREAS, FUEL STORAGE AREAS, AND POLLUTANT CONTROLS FOR EACH, AS SOON AS POSSIBLE.

4. THE GENERAL CONTRACTOR SHALL PERFORM ALL REQUIRED INSPECTIONS OF STORMWATER CONTROLS AND PRACTICES AT FREQUENCIES GIVEN IN THE NPDES GENERIC PERMIT, AND SHALL COMPLETE AND SIGN APPROPRIATE INSPECTION FORMS (AS PROVIDED IN THE STORMWATER POLLUTION PREVENTION PLAN).

5. OIL AND GREASE ABSORBING MATERIALS SHALL BE READILY AVAILABLE ON-SITE AND SHALL BE PROMPTLY USED TO CONTAIN AND/OR CLEAN UP ALL FUEL OR CHEMICAL SPILLS OR LEAKS.

6. DUST CONTROL SHALL BE ACCOMPLISHED BY WATERING DRY, EXPOSED AREAS ON A REGULAR BASIS. SPRAYING OF PETROLEUM BASED OR TOXIC LIQUIDS FOR THIS PURPOSE IS PROHIBITED.

7. DISTURBED AREAS OF THE SITE WHERE CONSTRUCTION ACTIVITIES HAVE CEASED FOR AT LEAST FOURTEEN DAYS SHALL BE TEMPORARILY STABILIZED WITH VEGETATION AND MULCH.

8. DISTURBED AREAS OF THE SITE WHERE CONSTRUCTION ACTIVITIES HAVE PERMANENTLY CEASED SHALL BE PERMANENTLY SEEDED WITHIN FOURTEEN DAYS PER LANDSCAPING SPECIFICATIONS.

9. ALL VEHICLES SHALL BE CLEANED AT THE CONSTRUCTION EXIT POINTS ACCORDING TO NOTES SHOWN ON THE DETAIL THEREOF. IF THE MAJORITY OF MUD OR DIRT IS NOT REMOVED FROM EXITING TRAFFIC, HOSE BIBS SHALL BE PROVIDED AT CONSTRUCTION TRAFFIC EXIT POINTS, AND VEHICLE TIRES SHALL BE WASHED BEFORE EXITING ONTO PUBLIC ROADS. SILT FROM THIS WASHING OPERATION SHALL BE INTERCEPTED AND TRAPPED BEFORE WASHWATER IS ALLOWED TO BE DISCHARGED OFF-SITE.

10. ALL MATERIALS SPILLED, DROPPED, WASHED OR TRACKED ONTO ADJACENT ROADWAYS BY VEHICLES EXITING THE SITE SHALL BE CLEANED OR REMOVED IMMEDIATELY.

11. CONTRACTOR SHALL PREVENT ANY SILTATION FROM ENTERING THE STORM SEWER SYSTEM. ALL INLETS AND INLET OPENINGS SHALL BE FULLY ENCIRCLED WITH APPROPRIATE INLET PROTECTION DEVICES.

12. THE CONTRACTOR SHALL REMOVE ALL ACCUMULATED SILT IN ANY TEMPORARY OR PERMANENT DETENTION PONDS, STORM SEWER INLETS AND PIPES, AND ALONG SILT FENCES, WITHIN 48 HOURS AFTER INSPECTION OF DEVICES REVEALS THE PRESENCE OF EXCESSIVE SILTATION (AS SPECIFIED IN THE STORM WATER POLLUTION PREVENTION PLAN).

13. SILT FENCES SHALL BE PLACED AROUND ANY STOCKPILES USED ON THIS SITE.

14. THE CONTRACTOR IS ADVISED TO CONSTRUCT TEMPORARY OR PERMANENT FENCING AROUND DETENTION PONDS AND SEDIMENT BASINS AT THE EARLIEST POSSIBLE TIME TO PREVENT ACCIDENTAL ACCESS BY PERSONS OR ANIMALS.

15. ANY ADDITIONAL EROSION CONTROL MEASURES REQUIRED TO ENSURE COMPLIANCE WITH THE NPDES GENERIC PERMIT OR LOCAL PERMIT REQUIREMENTS SHALL BE IMPLEMENTED BY THE CONTRACTOR, AT NO ADDITIONAL EXPENSE TO THE OWNER.

16. ALL TEMPORARY EROSION CONTROL MEASURES SHALL BE REMOVED AND PROPERLY DISPOSED OF OFF-SITE WITHIN THIRTY DAYS AFTER STABILIZATION OF ALL SURFACES.

17. THE CONTRACTOR SHALL ASSUME LIABILITY FOR DAMAGE TO ADJACENT PROPERTIES AND/OR PUBLIC RIGHT-OF-WAY RESULTING FROM FAILURE TO FULLY IMPLEMENT AND EXECUTE ALL EROSION CONTROL PROCEDURES SHOWN AND NOTED IN THESE PLANS.

18. WHENEVER DIRT, ROCK, OR OTHER MATERIALS ARE EXPORTED FOR USE OFF OF THE PRIMARY CONSTRUCTION SITE, CONTRACTOR SHALL ASSUME RESPONSIBILITY FOR COMPLIANCE WITH ALL FDEP STORMWATER REQUIREMENTS FOR THE REMOTE SITE. CONTRACTOR SHALL FURNISH THE ENGINEER AND THE OWNER'S CONSTRUCTION MANAGER WITH DOCUMENTATION OF COVERAGE FOR THE BORROW OR FILL SITE UNDER A NPDES PERMIT FOR STORMWATER DISCHARGES AND OF A WRITTEN AGREEMENT WITH THE LANDOWNER OF THE REMOTE SITE INDICATING EROSION CONTROL MEASURES HAVE BEEN IMPLEMENTED THEREON. AT A MINIMUM, EROSION CONTROL MEASURES MUST CONSIST OF PERIMETER CONTROLS (SILT FENCES) ON ALL DOWN SLOPES AND SIDE SLOPE BOUNDARIES OF ANY DISTURBED AREA, PLUS PROVISIONS FOR RE-VEGETATION AFTER THE FILL MATERIALS ARE IN PLACE.

19. ALL SLOPES ON SITE WHICH ARE 3:1 OR STEEPER SHALL BE STABILIZED BY TRACK WALKING (TRAVERSING UP AND DOWN THE SLOPE WITH A TRACKED VEHICLE) FOLLOWED BY INSTALLATION OF EROSION CONTROL BLANKET INSTALLED IN ACCORDANCE WITH MANUFACTURER'S INSTRUCTIONS. EROSION CONTROL BLANKET SHALL BE NORTH AMERICAN GREEN S150 OR APPROVED EQUAL.

20. THE CONTRACTOR SHALL NOTE ON SITE PLAN THE LOCATION OF ALL MATERIAL STORAGE AREAS, EQUIPMENT STORAGE AREAS, PETROLEUM TANKS, SOLID WASTE RECEPTACLES, SANITARY FACILITIES, CONCRETE WASHOUT AREAS, ANY ON-SITE OR OFF-SITE BORROW OR STOCKPILE AREA, ANY ON-SITE OR OFF-SITE SUPPORT ACTIVITIES (SUCH AS ASPHALT OR CONCRETE PLANTS). CONTRACTOR SHALL ALSO PREPARE, KEEP ON SITE, AND MAINTAIN CURRENT A LIST OF MATERIALS WITH APPROXIMATE QUANTITIES, WHICH ARE STORED ON SITE.

21. THE CONTRACTOR IS SPECIFICALLY CAUTIONED THAT THE LOCATION AND/OR ELEVATION OF EXISTING UTILITIES AS SHOWN ON THESE PLANS IS BASED UPON RECORD OF THE VARIOUS UTILITY COMPANIES AND, WHERE POSSIBLE, ACTUAL MEASUREMENTS TAKEN IN THE FIELD. THE INFORMATION PROVIDED HEREON IS NOT TO BE TAKEN AS EXACT OR FULLY COMPLETE. THE CONTRACTOR MUST CALL THE APPROPRIATE UTILITY COMPANY AT LEAST 48 HOURS BEFORE ANY EXCAVATION TO REQUEST EXACT FIELD LOCATION OF ALL EXISTING UTILITIES. IT SHALL BE THE RESPONSIBILITY OF THE CONTRACTOR TO RELOCATE ALL EXISTING UTILITIES WHICH CONFLICT WITH THE PROPOSED IMPROVEMENTS AS SHOWN.

Know what's below. Call before you dig.

THESE PLANS ARE SUBJECT TO REVIEW & APPROVAL BY JURISDICTIONAL ENTITIES.

OWNER'S CERTIFICATION

PER SECTION 2.8.1.C OF THE BASIS OF REVIEW, THE OWNER/PERMITTEE SHALL ENSURE THAT THE SURFACE WATER AND STORMWATER MANAGEMENT MEASURES PROPOSED IN THE PLAN ARE EFFECTIVELY IMPLEMENTED UNTIL COMPLETION OF THE PROJECT OR UNTIL THE PERMANENT SURFACE WATER MANAGEMENT SYSTEM IS OPERATIONAL.

G&G ENTERPRISES OF PORT RICHEY, INC.

BY: ______________________
GARY L. BROWN - MANAGER

____
DATE

ACREAGE SUMMARY

TOTAL SITE	1.06 AC
TOTAL DISTURBED	± 1.1 AC
WEIGHTED PRE-CONSTRUCTION RUNOFF COEFFICIENT(C_W)	0.90
WEIGHTED POST-CONSTRUCTION RUNOFF COEFFICIENT(C_W)	0.90
POST AREA ROOFED OR PAVED	0.79 AC
POST AREA LANDSCAPED	0.27 AC

LEGEND

Symbol	Description
	PROPOSED LANDSCAPE AREAS
	PROPOSED CONSTRUCTION ENTRANCE VEHICLE TRACKING CONTROL
	PROPOSED ROCK FILTER DAM
XXX	PROPOSED CONTOUR
	EXISTING DRAINAGE FLOW ARROW
	PROPOSED DRAINAGE FLOW ARROW
SF	PROPOSED SEDIMENT FENCE (SHOWN SCHEMATICALLY ON PLANS)
LD	LIMITS OF DISTURBANCE
SF	SEDIMENT FENCE
IP	INLET PROTECTION
VTC	VEHICLE TRACKING CONTROL
RFD	ROCK FILTER DAM

REV	DATE	DESCRIPTION	BY	ISSUE REF
---	---	---	---	---
---	---	---	---	---
---	---	---	---	---
---	---	---	---	---

Adams
27524 Cashford Circle, Suite 101 ■ Wesley Chapel, Florida 33544 ■ (813) 929-7499

TIM D. HODES LICENSE No 67017 STATE OF FLORIDA PROFESSIONAL ENGINEER 9-22-15

Certificate Of Authorization: #27614

OFFICE	FLORIDA REGION
ADDRESS	KROC DRIVE - OAK BROOK, ILLINOIS 60521

MCDONALD'S L/C: 009-2596

McDonald's USA, LLC

These drawings and specifications are the confidential and proprietary property of McDonald's USA, LLC and shall not be copied or reproduced without written authorization. The contract documents were prepared for use on this specific site in conjunction with its issue date and are not suitable for use on a different site or at a later time. Use of these drawings for reference or example on another project requires the services of properly licensed architects and engineers. Reproduction of the contract documents for reuse on another project is not authorized.

11929 US HIGHWAY 19
PORT RICHEY, FLORIDA

PLAN APPROVALS	SIGNATURE (2 REQUIRED)	DATE
REGIONAL MGR.		
CONST. MGR.		
OPERATIONS DEPT.		
REAL ESTATE DEPT.		
CO-SIGN SIGNATURES		
CONTRACTOR		
OWNER		

ADAMS JOB NO.	2014.086	
STATUS	DATE	BY
DATE DRAWN	SEPT 2015	EAO
PLAN CHECKED	SEPT 2015	TDH
AS-BUILT		

EROSION CONTROL PLAN

C3.0

© Copyright 2015, Adams Engineering

FULL PATH: I:_Projects\2014\2014.086_McD_Hudson Relo - Pasco FL\Drawings\03 - Production\C3.0 EROSION CONTROL PLAN
PLOTTER: Adobe PDF PLOT TIME: 5:24:13 PM PLOT DATE: Tuesday, September 22, 2015 PLOTTED BY: Edgar Ortiz
FILENAME: C3.0 EROSION CONTROL PLAN.dwg

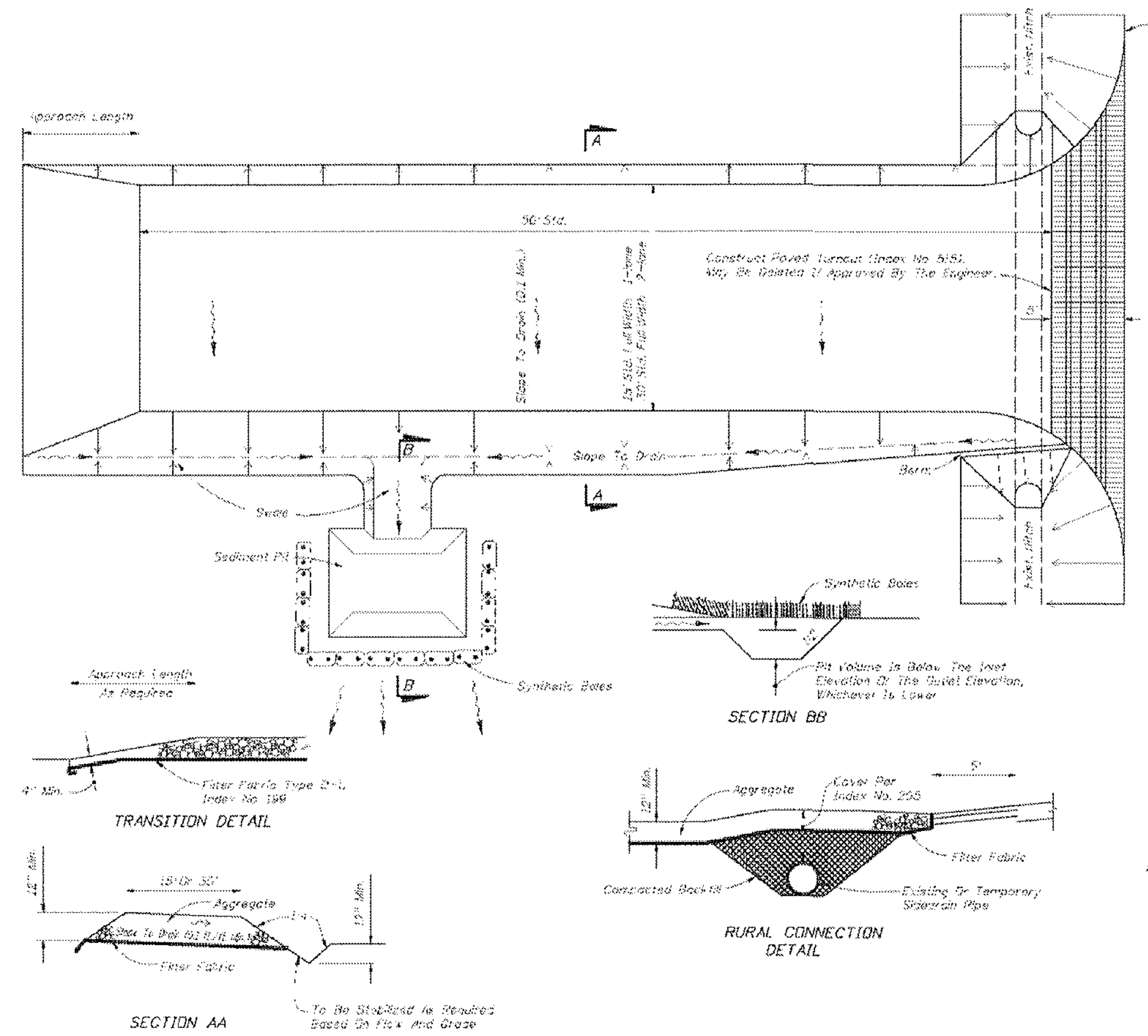

GENERAL NOTES

1. A Soil Tracking Prevention Device (STPD) shall be constructed at locations designated by the engineer for points of egress from unstabilized areas of the project to public roads where off-site tracking of mud could occur. Traffic from unstabilized areas of the construction project shall be directed thru a STPD. Barriers, flagging, or other positive means shall be used as required to limit and direct vehicular egress across the STPD.
2. The Contractor may propose an alternative technique to minimize off-site tracking of sediment. The alternative must be reviewed and approved by the Engineer prior to its use.
3. All materials spilled, dropped, or tracked onto public roads (including the STPD aggregate and construction mud) shall be removed daily, or more frequently if so directed by the Engineer.
4. Aggregates shall be as described in Section 901 excluding 901-2.3. Aggregates shall be FDOT size #1. If this size is not available, the next available smaller size aggregate may be substituted with the approval of the Engineer. Sizes containing excessive small aggregate will track off the project and are unsuitable.
5. The sediment pit should provide a retention volume of 3600 cubic feet/acre of surface area draining to the pit. When the STPD is isolated from other drainage areas, the following pit volumes will satisfy this requirement: 15' x 50' = 105 ft.³ 30' x 50' = 200 ft.³ As an option to the sediment pit, the width of the swale bottom can be increased to obtain the volume. When the sediment pit or swale volume has been reduced to one half, it shall be cleaned. When a swale is used, synthetic bales or silt fence shall be placed along the entire length.
6. The swale ditch draining the STPD shall have a 0.02% minimum and a 1.0% maximum grade along the STPD and to the sediment pit.
7. Mitered end sections are not required when the sidedrain pipe satisfies the clear zone requirements.
8. The STPD shall be maintained in a condition that will allow it to perform its function. To prevent off-site tracking, the STPD shall be rinsed (daily when in use) to move accumulated mud downward thru the stone. Additional stabilization of the vehicular route leading to the STPD may be required to limit the mud tracked.
9. A STPD shall be paid for under the contract unit price for Soil Tracking Prevention Device, EA. The unit price shall constitute full compensation for construction, maintenance, replacement of materials, removal, and restoration of the area utilized for the STPD including but not limited to excavation, grading, temporary pipe (including MES when required), filter fabric, aggregate, paved turnout (including asphalt and base construction), ditch stabilization, approach route stabilization, sediment removal and disposal, water, rinsing and cleaning of the STPD and cleaning of public roads, grassing and sod. Synthetic Bale or Bale Type Barrier shall be paid for under the contract unit price for Synthetic Bales, LF. Silt fence shall be paid for under the contract unit price for Staked Silt Fence, LF.
10. The nominal size of a standard STPD is 15' x 50' unless otherwise shown in the plans. If the volume of entering and existing vehicles warrant, a 30' width STPD may be used if approved by the Engineer. When a double width (30') STPD is used, the pay quantity shall be 2 for each location.

1 VEHICLE TRACKING CONTROL - CONSTRUCTION ENTRANCE/EXIT (VTC)

NTS

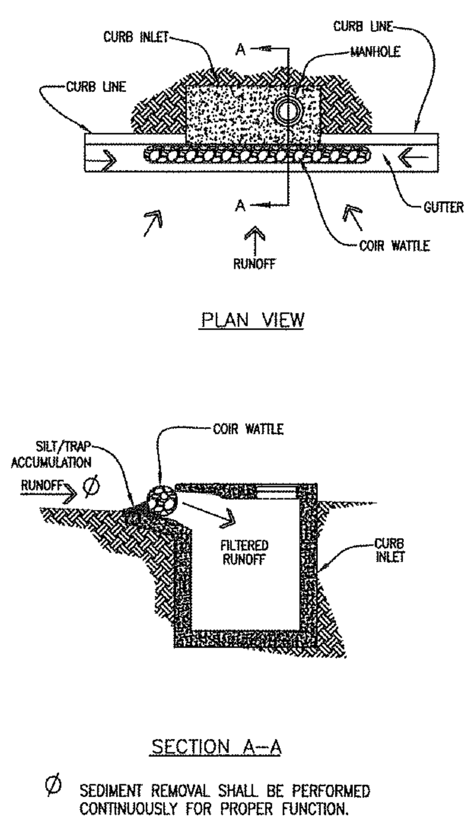

Ø SEDIMENT REMOVAL SHALL BE PERFORMED CONTINUOUSLY FOR PROPER FUNCTION.

IP

2 CURB INLET PROTECTION COIR WATTLE OPTION

NTS

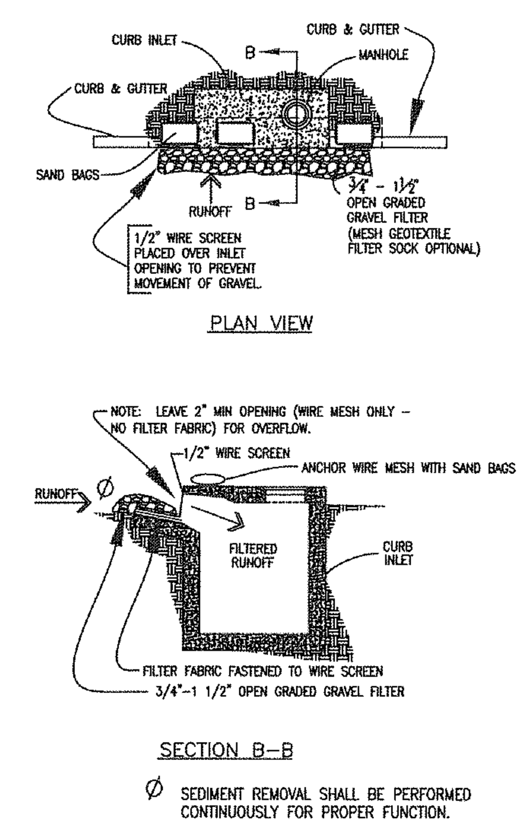

Ø SEDIMENT REMOVAL SHALL BE PERFORMED CONTINUOUSLY FOR PROPER FUNCTION.

(HIGHER VOLUME TRAFFIC AREAS) IP

3 CURB INLET PROTECTION GRAVEL AND WIRE MESH OPTION

NTS

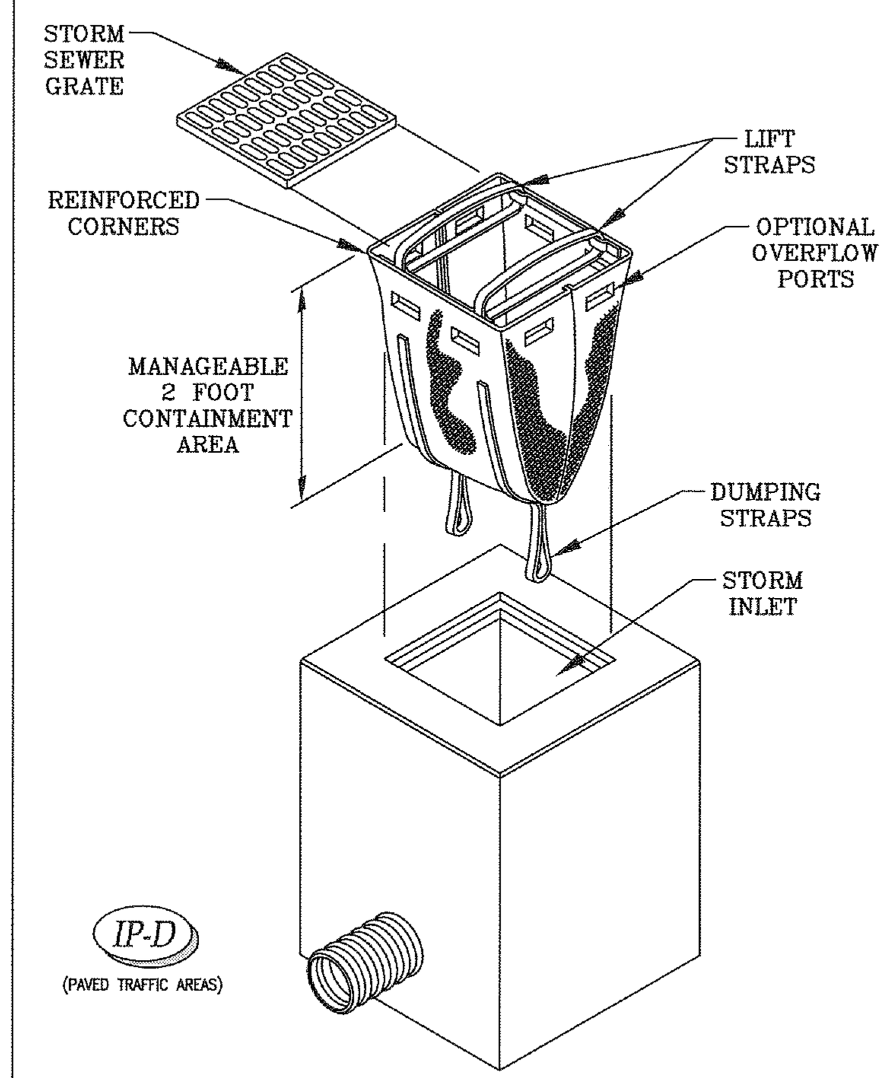

IP-D (PAVED TRAFFIC AREAS)

4 DANDY SACK™ FOR CATCH BASINS

NTS

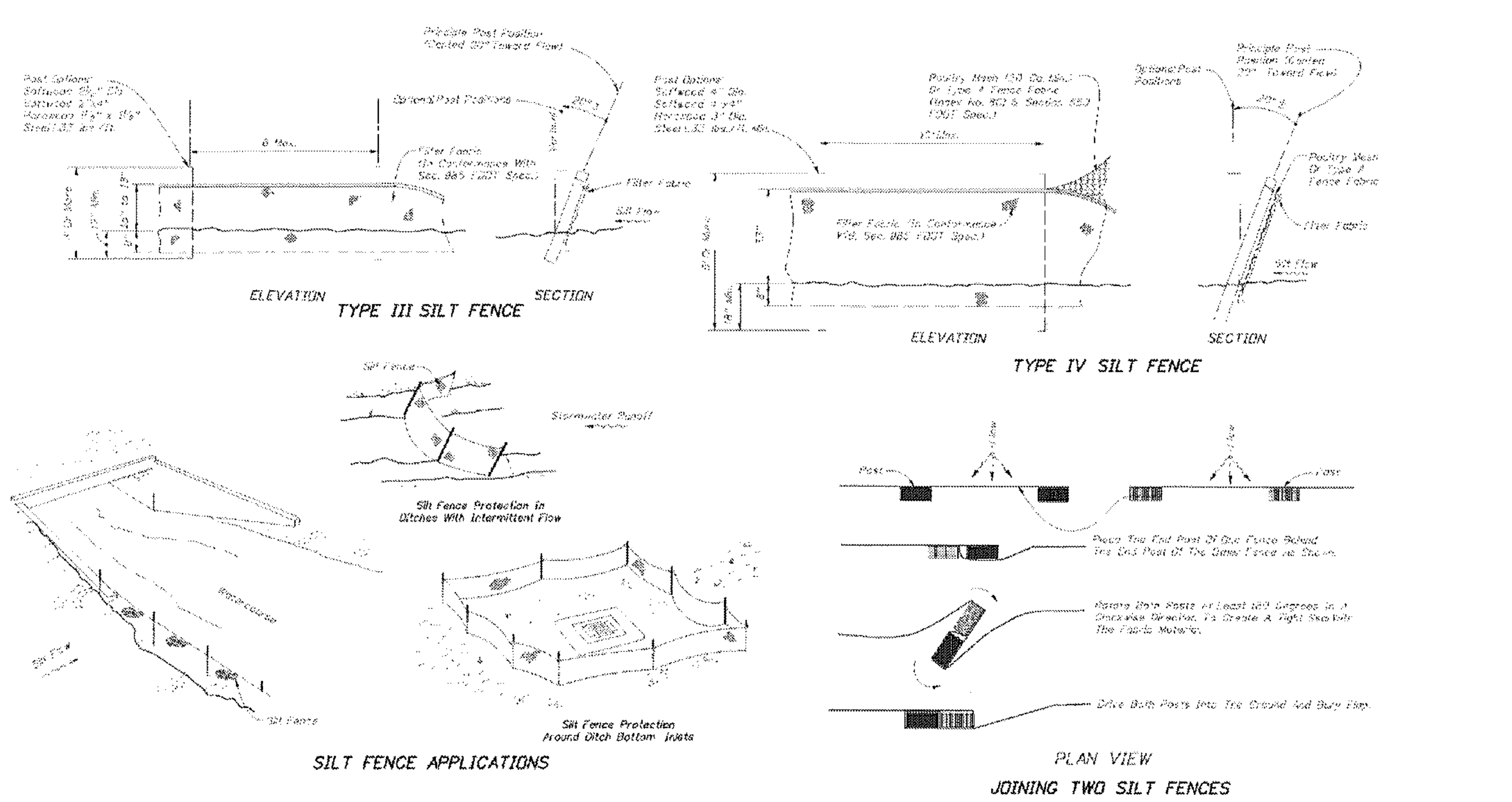

NOTES FOR SILT FENCES

1. Type III Silt Fence to be used at most locations. Where used in ditches, the spacing for Type III Silt Fence shall be in accordance with Chart I, Sheet 1.
2. Type IV Silt Fence to be used where large sediment loads are anticipated. Suggested use is where the slope is 1:2 or steeper and length of slope exceeds 25 feet. Avoid use where the detained water may back into travelanes or off the right of way.
3. Do not construct silt fences across permanent flowing watercourses. Silt fences are to be at upland locations and turbidity barriers used at permanent bodies of water.
4. Where used as slope protection, Silt Fence is to be constructed on 0% longitudinal grade to avoid channelizing runoff along the length of the fence.
5. Silt Fence to be paid for under the contract unit price for Staked Silt Fence, LF.

5 FDOT TYPE III SILT FENCE DETAIL (SF)

NTS

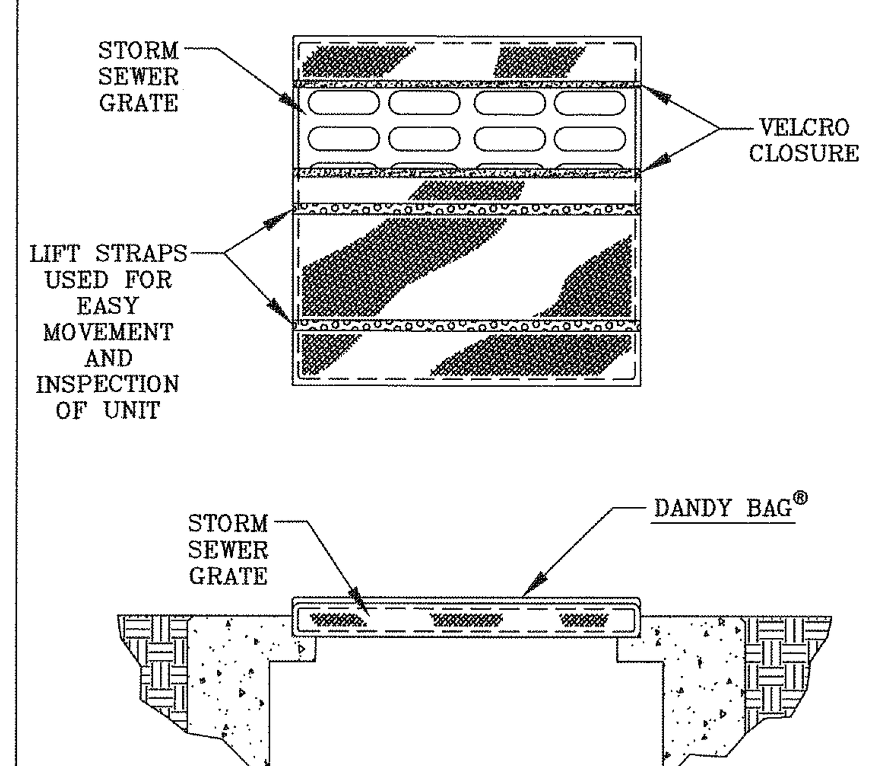

IP-D (PAVED TRAFFIC AREAS)

6 DANDY BAG™ FOR CATCH BASINS

NTS

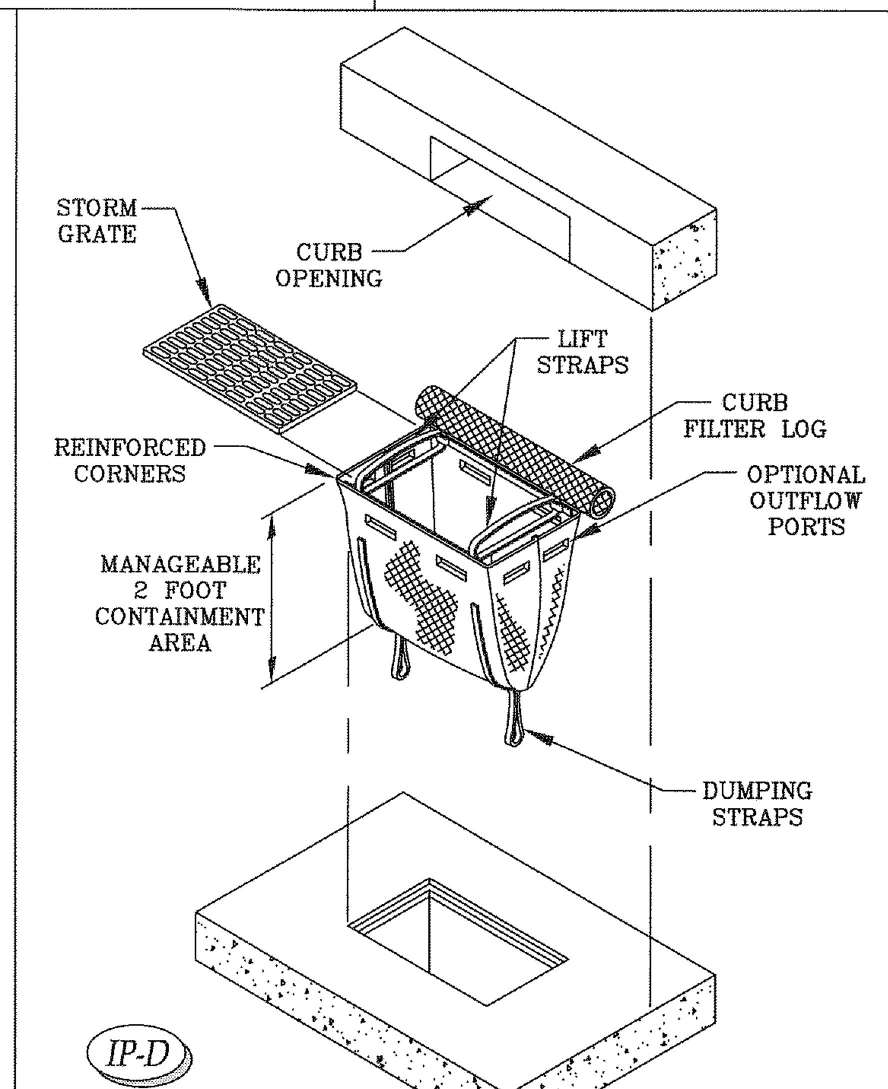

IP-D

7 DANDY CURB SACK™ FOR COMBINATION INLET

NTS

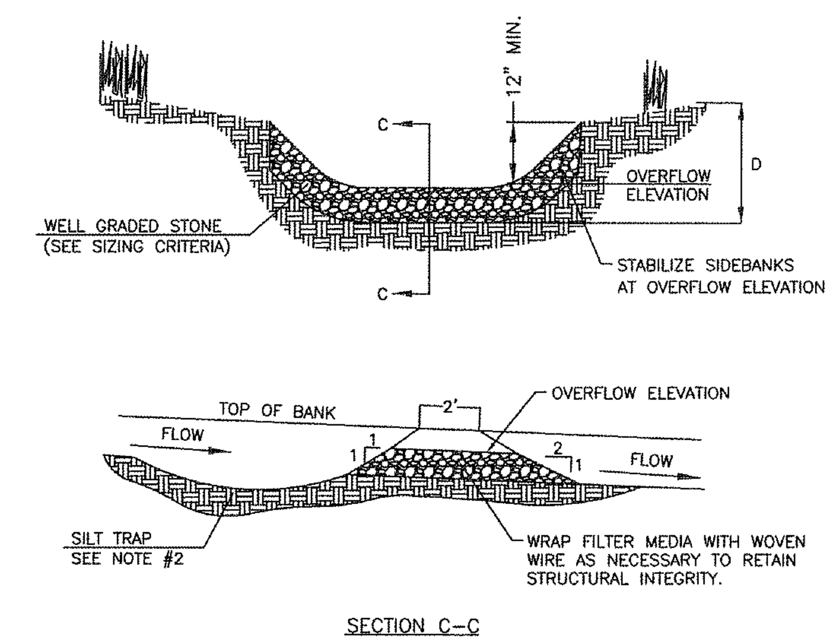

RFD

ROCK CHECK DAM GENERAL NOTES:

1. STONE SHALL BE WELL GRADED WITH SIZE RANGE FROM 3" TO 8" IN DIAMETER DEPENDING ON EXPECTED FLOWS.
2. CONTRACTOR SHALL EXCAVATE A DEPRESSION AT UPSTREAM FACE TO ALLOW FOR ACCUMULATION OF SILTATION.
3. THE CHECK DAM SHALL BE INSPECTED AS SPECIFIED IN THE SWPPP AND SHALL BE REPLACED WHEN THE STRUCTURE CEASES TO FUNCTION AS INTENDED DUE TO SILT ACCUMULATION AMONG THE ROCKS, WASHOUT, CONSTRUCTION TRAFFIC DAMAGE, ETC.
4. WHEN SILT REACHES A DEPTH EQUAL TO ONE–THIRD OF THE HEIGHT OF THE CHECK DAM OR ONE FOOT, WHICHEVER IS LESS, THE SILT SHALL BE REMOVED AND DISPOSED OF PROPERLY.
5. WHEN THE SITE HAS ACHIEVED FINAL STABILIZATION OR ANOTHER EROSION OR SEDIMENT CONTROL DEVICE IS EMPLOYED, THE CHECK DAM AND ACCUMULATED SILT SHALL BE REMOVED AND DISPOSED OF IN AN APPROVED MANNER.

8 ROCK FILTER DAM

NTS

OWNER'S CERTIFICATION

PER SECTION 2.8.1.C OF THE BASIS OF REVIEW, THE OWNER/PERMITTEE SHALL ENSURE THAT THE SURFACE WATER AND STORMWATER MANAGEMENT MEASURES PROPOSED IN THE PLAN ARE EFFECTIVELY IMPLEMENTED UNTIL COMPLETION OF THE PROJECT OR UNTIL THE PERMANENT SURFACE WATER MANAGEMENT SYSTEM IS OPERATIONAL.

G&G ENTERPRISES OF PORT RICHEY, INC.

BY: ____________________
GARY L. BROWN - MANAGER

____
DATE

REV	DATE	DESCRIPTION	BY	ISSUE REF
----	----	----	----	----
----	----	----	----	----
----	----	----	----	----
----	----	----	----	----

Adams
27524 Cashford Circle, Suite 101 ■ Wesley Chapel, Florida 33544 ■ (813) 929-7499

TIM D. HODES LICENSE No 67017 STATE OF FLORIDA PROFESSIONAL ENGINEER 9-22-15

Certificate Of Authorization: #27614

OFFICE FLORIDA REGION
ADDRESS KROC DRIVE - OAK BROOK, ILLINOIS 60521
MCDONALD'S L/C: 009-2596

McDonald's USA, LLC

These drawings and specifications are the confidential and proprietary property of McDonald's USA, LLC and shall not be copied or reproduced without written authorization. The contract documents were prepared for use on this specific site in conjunction with its issue date and are not suitable for use on a different site or at a later time. Use of these drawings for reference or example on another project requires the services of properly licensed architects and engineers. Reproduction of the contract documents for reuse on another project is not authorized.

11929 US HIGHWAY 19
PORT RICHEY, FLORIDA

PLAN APPROVALS

	SIGNATURE (2 REQUIRED)	DATE
REGIONAL MGR.		
CONST. MGR.		
OPERATIONS DEPT.		
REAL ESTATE DEPT.		
CO-SIGN SIGNATURES		
CONTRACTOR		
OWNER		

ADAMS JOB NO.	2014.086	
STATUS	DATE	BY
DATE DRAWN	SEPT 2015	EAO
PLAN CHECKED	SEPT 2015	TDH
AS-BUILT		

EROSION CONTROL DETAILS

C3.1

© Copyright 2015, Adams Engineering

FILENAME: C3.1 EROSION CONTROL DETAILS.dwg PLOTTED BY: Edgar Ortiz PLOT DATE: Tuesday, September 22, 2015 PLOT TIME: 5:52:12 PM PLOTTER: Adobe PDF FULL PATH: I:_Projects\2014\2014.086_McD_Hudson Relo - Pasco FL\Drawings\03 - Production I:_Projects\2014\2014.086_McD_Hudson Relo - Pasco FL\Drawings\03 - Production\C3.1 EROSION CONTROL DETAILS

McDONALD'S
STORMWATER POLLUTION PREVENTION PLAN NOTES

SITE EVALUATION, ASSESSMENT, & PLANNING:

PROJECT NAME: *McDonald's Restaurant - L/C: 009-2596*
PROJECT ADDRESS: *11929 US HIGHWAY 19; PORT RICHEY , FLORIDA*
SECTION: 9 TOWNSHIP: *25 S* RANGE: *16 E*
LATITUDE: 28° 19' 51" N LONGITUDE: -82° 41' 59" W
DEVELOPER'S NAME: *McDONALD'S USA, LLC*
DEVELOPER'S ADDRESS: *10150 HIGHLAND MANOR DRIVE; SUITE 470; TAMPA, FLORIDA 33610*

Description of the Project and the types of Soil Disturbing Activities:

This project will consist of a complete construction of a fast food restaurant structure and its related site features.

Soil disturbing activities will include: demolition, striping and grubbing; installing a stabilized construction entrance, perimeter and other erosion and sediment controls throughout the site; grading; excavation, storm sewer, utilities and building foundations; construction of curb and gutter; parking lot; and preparation for final planting and seeding.

Runoff Coefficient, Soils and Rainfall Information:

The initial coefficient of runoff for the pre-construction site is "c" = 0.90. The post-construction coefficient of runoff for the site will be "c" = 0.90. The site is 1.06 acres and 1.10 acres will be disturbed by construction activities.

According to the USDA Soil Survey for Pasco County the soil is described as Urban Land.

The site is in Pasco County which receives an average of 53" of rainfall annually.

Site Area:

The site is approximately 1.06 acres and 1.10 acres will be disturbed by construction activities.

Sequence of Major Events:

1. Install silt fences around perimeter of property and disturbed areas as shown.
2. Install inlet protection for all existing grate inlets, curb inlets and at the ends of all exposed storm sewer pipes, if present. Install rock filter dams where shown.
3. Construct temporary construction exit.
4. Commence grubbing and removal of vegetation in area to receive cut or fill.
5. Commence grading operation for building pad preparation (see grading plan).
6. Install all underground utilities.
7. Finalize pavement subgrade preparation.
8. Install all proposed storm sewer pipes and install inlet protection silt fences at ends of exposed pipes.
9. Construct all grate inlets and drainage structures. Inlet protection silt fences may be removed temporarily for this construction.
10. Remove silt fences around inlets and manholes no more than 48 hours prior to placing stabilized base course.
11. Install base material as required for pavement, curb & gutter.
12. Install all paving, curb & gutter.
13. Remove temporary construction exit, rock filter dams, silt fences, and inlet protection devices.
14. Complete planting and/or seeding of vegetated areas to accomplish stabilization, in accordance with the landscaping plan.

Name of Receiving Waters:

The site will drain through an on-site storm water management system and then drain into the County Road 52 right-of-way drainage system. It is the opinion of ADAMS that construction activities at this site with the practices contained in this SWPPP should not have an adverse impact on these water quality parameters.

EROSION AND SEDIMENT CONTROLS:

STABILIZATION PRACTICES

The contractor shall denude only areas where it is expected to be graded or altered within a two (2) week time frame. All pervious areas of the site included in grading that are disturbed during construction shall be graded and prepared with a combination of sod and/or seeding and mulched.

Temporary Stabilization - Top soil stock piles and disturbed portions of the site where construction activity temporarily ceases for at least 21 days shall be stabilized with temporary seed and mulch no later than 14 days from the last construction activity in that area. Grass seed shall be a mixture of 20 parts of Bermuda and 80 parts of Pensacola Bahia. The separate types of seed used shall be thoroughly dry mixed immediately before sowing. Seed which has become straw or hay consisting of oat, rye or wheat straw, or of Panola, peanut, coastal Bermuda or Bahia grass hay. Only un-deteriorated mulch which can be readily cut into the soil shall be used. Areas of the site which are to be paved will be temporarily stabilized by applying stabilization and base until bituminous pavement can be applied.

Permanent Stabilization - Disturbed portion of the site where construction activity permanently ceases shall be stabilized with sod no later than 14 days after the last construction activity.

Wind Erosion Stabilization -Areas within future units where earthwork is completed shall be completely seeded and mulched. Areas where construction operations will be continuous, fugitive dust shall be managed by applying a water spray to saturate the surface soils on a daily basis (or as needed) to maintain minimal dust transport. Fugitive dust shall be monitored continuously and additional measures may need to be taken to control off site transport of unacceptable levels of dust.

STRUCTURAL PRACTICES

Erosion Protection - During the construction phases, appropriate practices including, but not limited to: silt fence barriers, stabilized construction entrance, rock check dams, inlet protection with block and gravel and fabric material, and watering or other methods necessary will be implemented to control erosion.

Sediment Traps - Contractor shall excavate around all on-site drainage inlets and provide erosion control and overflow measures which shall serve as localized temporary sediment traps. At the contractor's discretion, the areas surrounding the on-site inlets can be excavated as much as two feet below the existing ground in order to allow any silt to be collected and removed prior to completion of the grading.

STORM WATER MANAGEMENT

Storm water drainage will be provided by an on-site storm drain and catch basin system. Any accumulated sediment shall be removed from the sediment basins. It is the responsibility of the contractor to construct and continually maintain all storm drains and retention/detention areas in accordance with the approved construction plans.

SPECIFIED OTHER CONTROLS:

WASTE DISPOSAL

Waste Materials - All waste materials shall be collected and contained in a controlled area pursuant to any state and/or local solid waste regulations. All trash and construction debris generated from construction is to be removed from the site and disposed of appropriately. No construction materials shall be buried on site. All personnel shall be instructed regarding the correct procedure for waste disposal. Notices stating these practices shall be posted in the construction office trailer. The job site superintendent (construction manager) responsible for the day-to-day site operations shall be responsible for seeing that these procedures are followed.

Hazardous Waste - If any, all hazardous waste materials shall be disposed of in the manner specified by state and/or local regulations. The contractor shall be responsible for seeing that these practices are followed.

Sanitary Waste - All sanitary waste shall be collected from the portable units by a license sanitary waste management contractor as required by state and/or local codes and regulations.

OFFSITE VEHICLE TRACKING

A stabilized construction entrance shall be provided to help reduce vehicle tracking of sediments. The paved streets adjacent to the site entrance will be swept daily to remove any excess mud, dirt or rock tracked from the site. Dump trucks hauling material from the site shall be covered with a tarpaulin.

TIMING OF CONTROL MEASURES:

As indicated in the Sequence of Major Events, staked silt fence and stabilized construction entrance shall be constructed prior to clearing or grading of any other portions of the site. Areas where construction activity temporarily ceases for more than 21 days shall be stabilized with a temporary seed and mulch within 14 days of the last disturbance. Once construction activities are completed in an area, that area shall be stabilized with permanent seed and mulch. After the entire site is stabilized, the accumulated sediment will be removed from the silt fence and/or other controls shall be removed.

CERTIFICATION OF COMPLIANCE WITH FEDERAL, STATE AND LOCAL REGULATIONS:

The storm water pollution prevention plan reflects the jurisdictional and Water Management District requirements for storm water management and erosion & sediment control as established by the jurisdiction's storm water management technical manual, the Florida Administrative Code, Chapter 40D-4 and 40D-40, and the Water Management District.

MAINTENANCE/INSPECTION PRACTICES:

EROSION AND SEDIMENT CONTROL INSPECTION AND MAINTENANCE PRACTICES

These are the inspection and maintenance practices that shall be used to maintain erosion and sediment control:

1. Less than one half of the site shall be denuded at one time.
2. All control measures shall be inspected at least once each week and following any storm event of 0.5-inches or greater by a contractor's representative.
3. All measures shall be maintained in good working order; if a repair is necessary, it shall be initiated within 24 hours of report.
4. Built up sediment shall be removed from silt fence when it has reached one-third the height of the silt fence.
5. Silt fence shall be inspected regularly for depth of sediment, tears, to see if the fabric is securely attached to the fence posts, and to see that the fence posts are firmly in the ground.
6. The sediment basins, if present, shall be inspected for depth of sediment, and built up sediment shall be removed when it reaches 10% of the design capacity or at the end of the job.
7. Temporary and permanent grassing and mulching and sodding shall be inspected for bare spots, washouts, and healthy growth.
8. A maintenance inspection report shall be made after each inspection by the contractor and shall be kept in an active log readily available at the job site.
9. Either the site superintendent or his designees shall be responsible for inspections, maintenance, repair activities and completing the inspection and maintenance report.
10. Personnel selected for inspection and maintenance responsibilities shall receive training from the site superintendent. They shall be trained in all the inspection and maintenance practices necessary for keeping the erosion and sediment controls used on site in good working order.

NON-STORM WATER DISCHARGE

It is expected that the following non-storm water discharges which are allowed under the NPDES General Permit may occur from the site during the construction period. These types of discharges will be allowed under the conditions that no pollutants will be allowed to come in contact with the water prior to or after its discharge.

1. Discharges from firefighting activities
2. Fire hydrant flushings (See Note below)
3. Waters used to spray off loose solids from vehicles (waste waters from a more thorough cleaning, including the use of detergents or other cleaners is not authorized by this part) or control dust in accordance with Part V.D. 2.c. (2) of the Generic Permit
4. Potable water sources such as waterline flushings, routine external building washdown which does not use detergents, irrigation drainage (without detergents present) (See Note below)
5. Pavement washwaters where spills or leaks of toxic or hazardous materials have not occurred (unless all spill materials has been removed) and where detergents have not been used
6. Air conditioning condensate
7. Springs
8. Foundation or footing drains where flows where no contamination with process materials such as solvents is present

NOTE: Contractor shall neutralize any super-chlorinated water from water distribution pipes before releasing it into the environment.

INVENTORY FOR POLLUTION PREVENTION PLAN:

The following materials or substances with known hazardous properties are expected to be present onsite during construction: Cleaning solvents, Detergents, Petroleum based products, Paints, Paint solvents, Acids, Fertilizers, Pesticides, Concrete, Concrete additives, Asphaltic Concrete, Tar and Soil stabilization additives.

SPILL PREVENTION:

MATERIAL MANAGEMENT PRACTICES

The following are the material management practices that shall be used to reduce the risk of spill or other accidental exposure of materials and substances to storm water runoff.

Good Housekeeping:
The following good housekeeping practices shall be followed onsite during the construction project.
1. An effort shall be made to store only enough products required to complete the project.
2. All materials stored on site shall be stored in a neat orderly manner in their appropriate containers and if possible, under a roof or other contained enclosure.
3. Products shall be kept in their original containers with the original manufacturer's label.
4. Substances shall not be mixed with one another unless recommended by the manufacturer.
5. Whenever possible, all of the product shall be used before disposing of the container.
6. Manufacturer's recommendations for proper use and disposal shall be followed.
7. The site superintendent shall inspect daily to ensure proper use and disposal of materials on site.

Hazardous Products:
These practices are used to reduce the risks associated with hazardous materials.
1. Products shall be kept in original containers unless the containers are not sealable.
2. Original labels and Material Safety Data Sheets (MSDS) shall be retained; they contain important product information.
3. If surplus product must be disposed of, manufacturer's and/or state and local recommended methods of proper disposal shall be followed.

PRODUCT SPECIFIC PRACTICES

Petroleum Products:
All on site vehicles shall be monitored for leaks and receive regular preventative maintenance to reduce the chance of leakage. Petroleum products shall be stored in tightly sealed containers which are clearly labeled. Any asphalt substances used onsite shall be applied accordingly to the manufacturer's recommendations.

Fertilizers:
Fertilizers shall be applied only in the minimum amount recommended by the manufacturer. Once applied, fertilizer shall be worked into the soil to limit exposure to storm water. Storage shall be in a covered shed. The contents of any partially used bags of fertilizer shall be transferred to a sealable plastic bin to avoid spills.

Paints:
All containers shall be tightly sealed and stored when not required for use. Excess paint shall not be discharged to the storm sewer system but shall be properly disposed of according to manufacturer's instructions and/or state and local regulations.

Concrete Trucks:
Contractor shall designate an area for discharge of surplus concrete or drum wash water and shall install a containment berm around this area to prevent runoff to the remainder of the site. Hard debris shall be disposed of by contractor upon completion of the project.

SPILL CONTROL PRACTICES:

In addition to the good housekeeping and materials practices discussed in the previous sections of this plan, the following practices shall be followed for spill prevention and cleanup:

1. Manufacturers recommended methods for spill clean up shall be clearly posted and site personnel shall be made aware of the procedures and the location of the information and clean up supplies. Material Safety Data Sheets (MSDS's) for each substance with hazardous properties that is used on the job site shall be obtained and used for the proper management of potential wastes that may result from these products. An MSDS will be posted in the immediate area where such product is stored and/or used and another copy of each MSDS will be maintained in the SWPPP file at the job site construction trailer office.
2. Materials and equipment necessary for spill clean up shall be kept in the material storage area onsite. Equipment and materials shall include, but not be limited to brooms, dust pans, mops, rags, gloves, goggles, kitty litter absorbent, sand, sawdust and plastic and metal trash containers specifically for this purpose.
3. All spills shall be cleaned up immediately after discovery.
4. The spill area shall be kept well ventilated and personnel shall wear appropriate protective clothing to prevent injury from contact with hazardous substance.
5. Spills of toxic or hazardous material shall be reported to the appropriate state or local government agency, regardless of the size.

The spill prevention plan shall be adjusted to include measures to prevent this type of spill from recurring and the clean up procedures for future use. A description of the spill, its cause and the clean up measures shall also be noted. Any owner or operator of a facility who has knowledge of any release of a hazardous substances from a facility in a quantity equal to or exceeding the reportable quantity in a 24 hour period shall notify the State Warning Point within one working day of the release. FDEP State Warning Point **1-850-413-9911** or **1-800-320-0519**.

NOTICE OF INTENT:

A notice of intent to use generic permit for stormwater discharge from large and small construction activities (FDEP Form 62-621.300(4)(b)) shall be submitted to the FDEP prior to any land disturbance. Contractor shall have FDEP authorization letter at the jobsite at all times.

NOTICE OF TERMINATION:

A notice of termination shall be submitted to the FDEP after the construction has been completed and the site has undergone final stabilization.

POLLUTION PREVENTION PLAN CERTIFICATION:

"I certify under penalty of law that this document and all attachments were prepared under my direction or supervision in accordance with a system designed to assure that qualified personnel properly gathered and evaluated the information submitted. Based on my inquiry of the person or persons who manage the system, or those persons directly responsible for gathering the information, the information submitted is, to the best of my knowledge and belief, true, accurate, and complete. I am aware that there are significant penalties for submitting false information, including the possibility of fine and imprisonment for knowing violations."

NAME: ____________________ TITLE: ____________________ COMPANY: ____________________

SIGNATURE: ____________________ DATE: ____________________

CONTRACTOR'S CERTIFICATION:

"I certify under penalty of law that I understand, and shall comply with, the terms and conditions of the State of Florida Generic Permit for Stormwater Discharge from Large and Small Construction Activities and this Stormwater Pollution Prevention Plan prepared thereunder."

NAME	TITLE	COMPANY NAME, ADDRESS, AND PHONE #	DATE	SIGNATURE	RESPONSIBILITY

OWNER'S CERTIFICATION

PER SECTION 2.8.1.C OF THE BASIS OF REVIEW, THE OWNER/PERMITTEE SHALL ENSURE THAT THE SURFACE WATER AND STORMWATER MANAGEMENT MEASURES PROPOSED IN THE PLAN ARE EFFECTIVELY IMPLEMENTED UNTIL COMPLETION OF THE PROJECT OR UNTIL THE PERMANENT SURFACE WATER MANAGEMENT SYSTEM IS OPERATIONAL.

G&G ENTERPRISES OF PORT RICHEY, INC.

BY: ____________________
GARY L. BROWN - MANAGER

____
DATE

REV	DATE	DESCRIPTION	BY	ISSUE REF
---	---	---	---	---
---	---	---	---	---
---	---	---	---	---
---	---	---	---	---

Adams
27524 Cashford Circle, Suite 101 ■ Wesley Chapel, Florida 33544 ■ (813) 929-7499

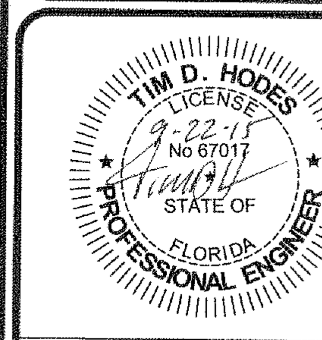

Certificate Of Authorization: #27614

MCDONALD'S L/C: 009-2596
OFFICE: FLORIDA REGION
ADDRESS: KROC DRIVE - OAK BROOK, ILLINOIS 60521

McDonald's USA, LLC

These drawings and specifications are the confidential and proprietary property of McDonald's USA, LLC and shall not be copied or reproduced without written authorization. The contract documents were prepared for use on this specific site in conjunction with its issue date and are not suitable for use on a different site or at a later time. Use of these drawings for reference or example on another project requires the services of properly licensed architects and engineers. Reproduction of the contract documents for reuse on another project is not authorized.

11929 US HIGHWAY 19
PORT RICHEY, FLORIDA

PLAN APPROVALS	SIGNATURE (2 REQUIRED)	DATE
REGIONAL MGR.		
CONST. MGR.		
OPERATIONS DEPT.		
REAL ESTATE DEPT.		
CO-SIGN SIGNATURES		
CONTRACTOR		
OWNER		

ADAMS JOB NO.	2014.086	
STATUS	DATE	BY
DATE DRAWN	SEPT 2015	EAO
PLAN CHECKED	SEPT 2015	TDH
AS-BUILT		

SWPPP

C3.2

© Copyright 2015, Adams Engineering

FULL PATH: I:_Projects\2014\2014.086_McD_Hudson Relo - Pasco FL\Drawings\03 - Production\C3.2 SWPPP
PLOTTER: Adobe PDF
PLOT TIME: 5:51:02 PM
PLOT DATE: Tuesday, September 22, 2015
PLOTTED BY: Edgar Ortiz
FILENAME: C3.2 SWPPP.dwg

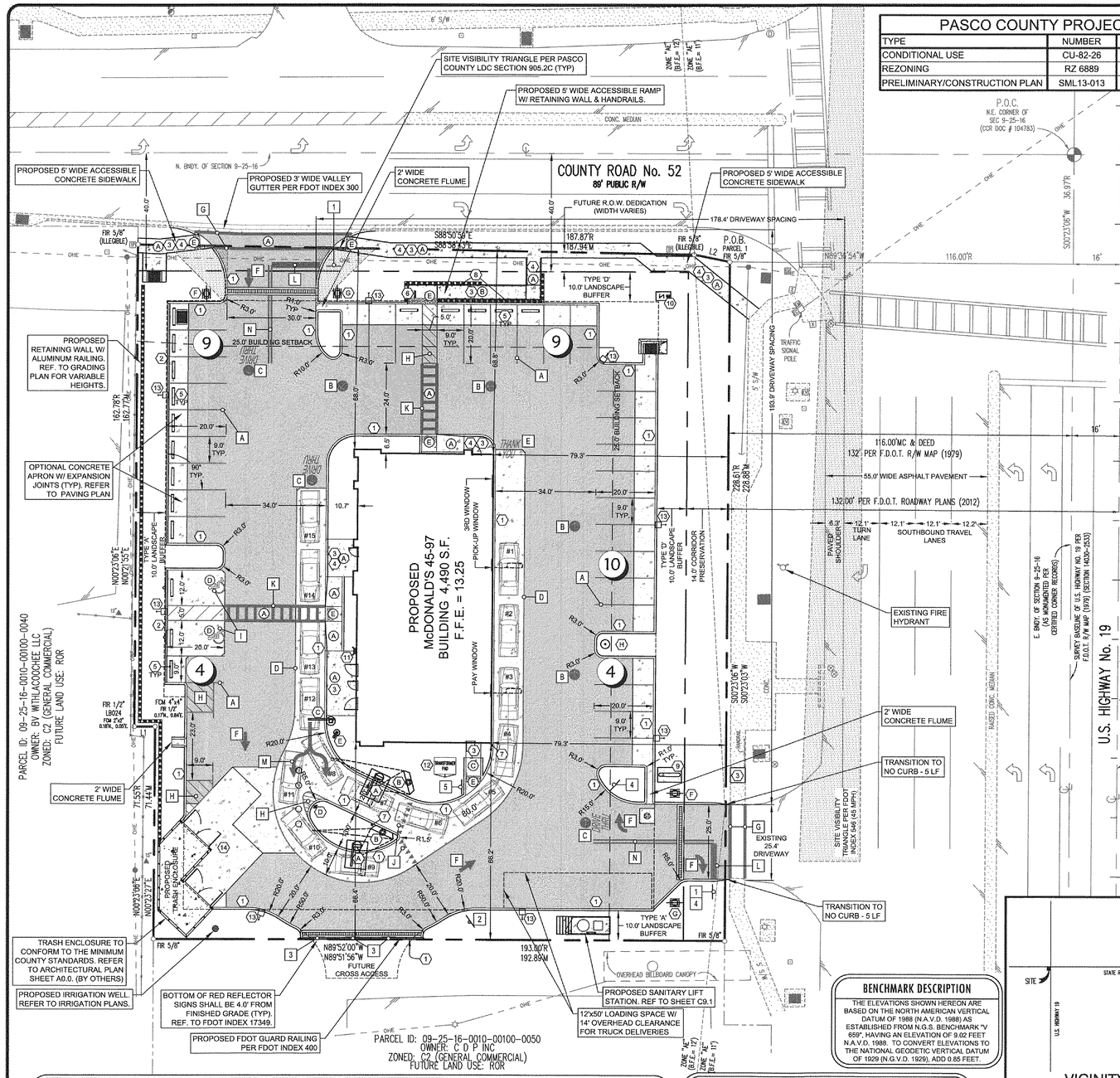

PASCO COUNTY PROJECT HISTORY

TYPE	NUMBER	DATE	STATUS
CONDITIONAL USE	CU-82-26	7/27/1982	APPROVED
REZONING	RZ 6889	12/1/2009	APPROVED
PRELIMINARY/CONSTRUCTION PLAN	SML13-013	4/26/2013	APPROVED

SITE LEGEND

- BOUNDARY LINE
- PROPOSED CURBS
- EXISTING CURBS
- PROPOSED CONCRETE. REF. PAVING PLAN
- PARKING NUMBER
- ACCESSIBLE PARKING
- PROPOSED ASPHALT PAVEMENT. REF. PAVING PLAN

THESE PLANS ARE SUBJECT TO REVIEW & APPROVAL BY JURISDICTIONAL ENTITIES.

SIGNAGE LEGEND

QTY.	MRK.	DESCRIPTION	SIZE
2	1	R1-1 - "STOP" SIGN	30"x30"
1	2	R5-1 - "DO NOT ENTER" SIGN	30"x30"
3	3	OM4-1 - RED REFLECTOR SIGN	18"x18"
2	4	R3-5R - "RIGHT ARROW ONLY" SIGN	30"x36"
1	5	R6-1R - "ONE WAY" ARROW SIGN	36"x12"

Contractor shall comply with the latest edition of the Manual on Uniform Traffic Control Devices (MUTCD) & the Florida Department of Transportation (FDOT) Standards. Bottom of signs shall be 7.0' minimum from finished grade, unless otherwise noted.

PASCO COUNTY NOTES

1. IF DURING CONSTRUCTION ACTIVITIES ANY EVIDENCE OF HISTORIC RESOURCES, INCLUDING BUT NOT LIMITED TO ABORIGINAL OR HISTORIC POTTERY, PREHISTORIC STONE TOOLS, BONE OR SHELL TOOLS, HISTORIC TRASH PITS, OR HISTORIC BUILDING FOUNDATION, ARE DISCOVERED, WORK SHALL COME TO AN IMMEDIATE STOP AND THE FLORIDA DEPARTMENT OF HISTORIC RESOURCES (STATE HISTORIC PRESERVATION OFFICER) AND PASCO COUNTY SHALL BE NOTIFIED WITHIN TWO WORKING DAYS OF THE RESOURCES FOUND ON THE SITE.
2. IF DURING CONSTRUCTION ACTIVITIES ANY EVIDENCE OF THE PRESENCE OF STATE AND FEDERALLY PROTECTED PLANT AND/OR ANIMAL SPECIES IS DISCOVERED, WORK SHALL COME TO AN IMMEDIATE STOP AND PASCO COUNTY SHALL BE NOTIFIED WITHIN TWO WORKING DAYS OF THE PLANT AND/OR ANIMAL SPECIES FOUND ON THE SITE.
3. ANY LIGHTING USED TO ILLUMINATE ANY PARKING AREA SHALL BE SO ARRANGED TO DIRECT AND/OR SHIELD LIGHT AWAY FROM ADJOINING RESIDENTIAL PREMISES AND RIGHT-OF-WAY.

SITE PLAN NOTES

1. CONTRACTOR SHALL REFER TO ARCHITECTURAL BUILDING PLANS FOR EXACT LOCATION AND ORIENTATION OF EXTERIOR DOORS.
2. TRASH ENCLOSURE TO MATCH BUILDING FINISH AS APPROVED BY MCDONALD'S AREA CONSTRUCTION MANAGER. REFER TO ARCHITECTURAL PLANS FOR TRASH ENCLOSURE DETAILS. TRASH ENCLOSURE SHALL AT MINIMUM BE DESIGN AND CONSTRUCTED USING ANY COUNTY STANDARDS. CONTRACTOR TO COORDINATE DESIGN SPECIFICATIONS WITH SOILS REPORT AND MCDONALD'S.
3. LOCATION OF SIGNS ARE APPROXIMATE. IT IS THE RESPONSIBILITY OF THE SIGN CONTRACTOR TO VERIFY COMPLIANCE WITH SETBACK, SIZE, HEIGHT AND RELATED ZONING REQUIREMENTS PRIOR TO SETTING.
4. THE LOCATION OF THE MENU BOARD AND PRE SELL BOARDS ARE NOT EXACT. IT IS THE RESPONSIBILITY OF THE CONTRACTOR TO VERIFY THE DIMENSIONS AND ORIENTATION WITH THE MCDONALD'S AREA CONSTRUCTION MANAGER.
5. ALL DIMENSIONS SHOWN ARE TO FACE OF CURB UNLESS NOTED OTHERWISE.
6. CONTRACTOR TO REFER TO ELECTRICAL ROUGH-IN PLAN FOR EXACT LOCATION OF LOOP DETECTOR AT DRIVE-THRU WINDOW. REFER TO DETAIL SHEETS PER DETECTOR LOOP MANUFACTURER.
7. CONTRACTOR TO REFER TO SITE UTILITY FOR PRELIMINARY LOT LIGHTING DESIGN LAYOUT. FINAL LAYOUT TO BE PROVIDED BY McDONALD'S CONSTRUCTION MANAGER.
8. LOT LIGHTING SHALL BE PLACED AT A MINIMUM OF THREE (3) FEET BEHIND THE BACK OF CURB.

SITE INFORMATION

TOTAL LAND AREA:	1.06 Ac. (45,996 SF)
PASCO COUNTY PROPERTY ID #:	09-25-16-0010-00100-0030
CURRENT ZONING:	C-2
FUTURE LAND USE:	ROR
CURRENT USE:	Restaurant - Commercial
PROPOSED USE:	Restaurant - Commercial
GROSS FLOOR AREA:	4,490 SF
FLOOR AREA RATIO (F.A.R.):	0.097 (4,490 SF/43,560 S.F. / 1.06 Ac.)
(F.A.R.=TOTAL BUILDING AREA (INCLUDING ALL FLOORS) DIVIDED BY 43,560 S.F. DIVIDED BY DEVELOPABLE ACREAGE)	
BUILDING HEIGHT:	23'-4" (35'-0" MAXIMUM)
FLOOD ZONE:	FLOOD ZONE "AE - B.F.E.=12"
PERVIOUS AREA (OPEN SPACE):	
PERVIOUS AREA PROVIDED:	26% (11,934 SF)
IMPERVIOUS AREA (BUILDING, SIDEWALKS, & PAVING):	
IMPERVIOUS AREA PROVIDED:	74% (34,062 SF)
TOTAL LAND AREA (PERVIOUS + IMPERVIOUS AREAS):	100% (45,996 SF)

LANDSCAPING INFORMATION:

BUFFER (ADJACENT TO R/W):	REQUIRED: 10'	PROVIDED: 10'
BUFFER (REAR PROPERTY):	REQUIRED: 10'	PROVIDED: 10'
BUFFER (SOUHT PROPERTY):	REQUIRED: 10'	PROVIDED: 10'

BUILDING SETBACKS:

FRONT: 25'	SIDES: 0'	REAR: 0'

PROPERTY LINE DIMENSIONS

LINE L1
N89°52'00"W - 7.00'R
S89°46'36"W - 7.07'M

LINE L2
S78°42'07"E - 12.36'R
S78°41'59"E - 12.29'M

Know what's below. Call before you dig.

CONSTRUCTION SCHEDULE

MARK	MARK DESCRIPTION
1	FDOT TYPE 'D' CONCRETE CURB (FDOT INDEX 300) WITH EXPANSION JOINT AT CONCRETE PAVEMENT INTERFACE.
2	FDOT TYPE 'D' CONCRETE CURB (FDOT INDEX 300) FLUSH W/ ADJACENT PAVEMENT & EXPANSION JOINTS AT CONCRETE PAVEMENT INTERFACE.
3	REINFORCED CONCRETE SIDEWALK (FDOT INDEX 310). (RE. C6.0 PAVING PLAN FOR REINFORCEMENT)
4	ACCESSIBLE ROUTE SIDEWALK (NOT TO EXCEED 5% SLOPE OR CROSS SLOPE OF 1.9%)
5	PAINTED CONCRETE BUMPER GUARD/WHEEL STOP (FDOT INDEX 300) - FEDERAL STD. YELLOW (#23655). FEDERAL STD. BLUE (#15180) FOR ACCESSIBLE SPACES.
6	BICYCLE RACK SPACE (U-TYPE RACK)
7	CONCRETE GUARD POST WITH YELLOW BOLLARD COVER
8	ALUMINUM PEDESTRIAN RAILING & HANDRAIL FOR RETAINING WALL ACCESSIBLE RAMP & SIDEWALK (FDOT INDEX 862)
9	PROPOSED FIRE LINE APPARATUS (RE: C9.0 UTILITY PLAN)
10	PROPOSED DOMESTIC WATER METER & APPARATUS (RE: C9.0 UTILITY PLAN)
11	FIRE DEPARTMENT 4" STORZ WALL CONNECTION (FDC) & KNOX BOX ATTACHED TO WALL (RE: C9.0 UTILITY PLAN)
12	PAD MOUNTED TRANSFORMER PER WREC SPECIFICATION
13	PROPOSED LIGHT POLES (RE: LP1.0 PHOTOMETRIC PLAN)
14	PROPOSED CONCRETE DUMPSTER APRON (RE: C6.0 PAVING PLAN)

2012 FLORIDA ACCESSIBILITY CODE

(A) ACCESSIBLE ROUTES: (CHAPTER 4 - SECTION 403)

The running slope of walking surfaces shall not be steeper than 1:20. The cross slope of walking surfaces shall not be steeper than 1:48.

The clear width of walking surfaces shall be 36 inches minimum. The clear width shall be permitted to be reduced to 32 inches minimum for a length of 24 inches maximum provided that reduced width segments are separated by segments that are 48 inches long minimum and 36 inches wide minimum. Where the accessible route makes a 180 degree turn around an element which is less than 48 inches wide, clear width shall be 42 inches minimum approaching the turn, 48 inches minimum at the turn and 42 inches minimum leaving the turn. An accessible route with a clear width less than 60 inches shall provide passing spaces at intervals of 200 feet maximum. Passing spaces shall be at least 60 inches by 60 inches minimum.

(B) RAMPS: (CHAPTER 4 - SECTION 405)

Ramp runs shall have a running slope not steeper than 1:12. The cross slope of ramp runs shall not be steeper than 1:48. Changes in level other than the running slope and cross slope are not permitted on ramp runs.

The clear width of a ramp run and, where handrails are provided, the clear width between handrails shall be 36 inches minimum.

The rise for any ramp run shall be 30 inches maximum. Ramps shall have landings at the top and the bottom of each ramp run. Landings slopes shall not be steeper than 1:48. The landing clear width shall be at least as wide as the widest ramp run leading to the landing. The landing clear length shall be 60 inches long minimum. Ramps that change directions between runs at landings shall have a clear landing 60 inches by 60 inches minimum.

Ramp runs with a rise greater than 6 inches shall have handrails complying with Section 505. Edge protection shall be provided on each side of ramp runs and at each side of ramp landing complying with Section 405.9. The floor or ground surface of the ramp run or landing shall extend 12 inches minimum beyond the inside face of a handrail.

(C) CURB RAMPS: (CHAPTER 4 - SECTION 406)

Curb ramp runs shall have a running slope not steeper than 1:12. The cross slope of ramp runs shall not be steeper than 1:48. Counter slopes of adjoining gutters and road surfaces immediately adjacent to the curb ramp shall not be steeper than 1:20. The adjacent surfaces at transitions at curb ramps to walk, gutters, and streets shall be at the same level.

Where provided, curb ramp flares shall not be steeper than 1:10.

Landings shall be provided at the tops of curb ramps. The landing clear length shall be 36 inches minimum. The landing clear width shall be at least as wide as the curb ramp, excluding flared sides, leading to the landing. In alternations, where there is no landing at the top of curb ramps, curb ramp flares shall be provided and shall not be steeper than 1:12.

Curb ramps and the flared sides of curb ramps shall be located so that they do not project into vertical traffic lanes, parking spaces, or parking access aisles.

Raised islands in crossings shall be cut through level with the street or have curb ramps at both sides. Each curb ramp shall have a level area 48 inches long minimum by 36 inches wide minimum at the top of the curb ramp in the part of the island intersected by the crossing.

Detectable warning shall extend the full width of the curb ramp and shall extend either the full depth of the curb ramp or 24 inches deep minimum measured from the back of the curb on the ramp surface.

(D) PARKING SPACES: (CHAPTER 5 - SECTION 502)

Each parking space must be at least 12 feet wide, shall be marked to define the width, and shall have an adjacent access aisle. Access aisles shall adjoin an accessible route that is at least 44 inches wide so that users are not compelled to walk or wheel behind parked vehicles. Access aisles serving car and van parking spaces shall be 60 inches wide minimum. Two parking spaces shall be permitted to share a common access aisle. Access aisles shall extend the full length of the parking spaces they serve. The access aisles must be striped diagonally to designate it as a no-parking zone

Access aisles shall be at the same level as the parking spaces they serve and slopes shall not be steeper than 1:48 in all directions.

Each accessible parking space must be prominently outlined with blue striping to be clearly distinguishable as a parking space designated for persons who have disabilities and must be posted with a permanent above-grade sign bearing the international symbol of accessibility, meeting the requirements of color and design approved by the Department of Transportation and the caption "parking by disabled permit only". Posted signage shall also indicate the penalty for illegal use of the space per jurisdictional entity.

(E) DETECTABLE WARNINGS: (CHAPTER 7 - SECTION 705)

Detectable warnings shall consist of a surface of truncated domes and shall comply with section 705. Detectable warning surfaces shall contrast visually with adjacent walking surfaces either light-on-dark, or dark-on-light. Detectable warning surfaces at platform boarding edges shall be 24 inches wide and shall extend the full length of the public use area of the platform.

PAVEMENT MARKING LEGEND

MARK	MARK DESCRIPTION
A	6" PARKING STALL STRIPING - COLOR : WHITE (TYP)
B	"CIRCLE / ARROW" - COLOR : YELLOW
C	"DRIVE THRU" WITH "ARROW" - COLOR : YELLOW
D	6" DRIVE-THRU STRIPING - COLOR : WHITE
E	"THANK YOU" AT END PATH - COLOR : WHITE
F	ARROW PATH DIRECTION - COLOR : WHITE
G	12" WHITE ACCESSIBLE CROSSWALK PER FDOT 17346 - COLOR : WHITE
H	4" DIAGONAL PAINTED ISLANDS AT PARKING AREA - COLOR : WHITE
I	HANDICAP ACCESSIBLE SPACES / SYMBOLS / CROSSWALK PER FDOT INDEX 17346. REFER TO SHEET D1.0 & D2.0 STANDARD DETAILS.
J	12"x18" WHITE ISOSCELES "YIELD" MARKINGS (MUTCD)
K	PEDESTRIAN CROSSING STRIPING PER FDOT INDEX 17346. REFER TO SHEET D2.0 STANDARD DETAILS.
L	24" WHITE STOP BAR WITH "STOP" SIGN - COLOR : WHITE
M	DOUBLE DRIVE-THRU "ARROW" MARKING - COLOR : WHITE
N	6" DOUBLE YELLOW STRIPE

BENCHMARK DESCRIPTION

THE ELEVATIONS SHOWN HEREON ARE BASED ON THE NORTH AMERICAN VERTICAL DATUM OF 1988 (N.A.V.D. 1988) AS ESTABLISHED FROM N.G.S. BENCHMARK "V 659", HAVING AN ELEVATION OF 9.02 FEET N.A.V.D. 1988. TO CONVERT ELEVATIONS TO THE NATIONAL GEODETIC VERTICAL DATUM OF 1929 (N.G.V.D. 1929), ADD 0.85 FEET.

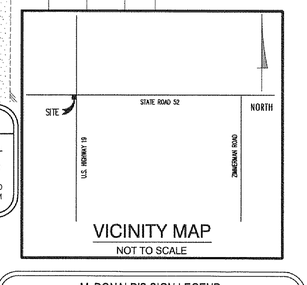

VICINITY MAP
NOT TO SCALE

PASCO COUNTY SITE PLAN NOTES

1. ALL UTILITY CONSTRUCTION SHALL COMPLY WITH PASCO COUNTY STANDARDS FOR DESIGN AND CONSTRUCTION OF WATER AND WASTEWATER FACILITIES SPECIFICATIONS, LATEST EDITION.
2. ALL ON-SITE WATER AND SEWER FACILITIES SHALL BE OWNED AND MAINTAINED BY THE OWNER-DEVELOPER.
3. INSTALLATION OF FUEL STORAGE TANKS REQUIRES REVIEW AND APPROVAL BY THE FIRE MARSHAL AND THE ISSUANCE OF A SEPARATE BUILDING PERMIT. APPROVAL OF THE SITE PLAN DOES NOT CONSTITUTE APPROVAL OF THE LOCATION OF THE FUEL TANKS.
4. ALL PROPOSED SIGNS MUST BE APPLIED FOR, APPROVED, AND PERMITTED ON AN INDIVIDUAL BASIS APART FROM ANY ULTIMATELY APPROVED SITE PLAN. APPROVAL OF THIS SITE PLAN DOES NOT CONSTITUTE APPROVAL OF ANY SIGNAGE.
5. HANDICAP PARKING SPACES WILL BE PROPERLY SIGNED AND STRIPED IN ACCORDANCE WITH FLORIDA STATUE 316, THE MANUAL ON UNIFORM TRAFFIC CONTROL DEVICES, OR OTHER APPLICABLE STANDARDS.
6. THE ARCHITECT/ENGINEER CERTIFIES THAT THE SITE HAS BEEN DESIGNED IN ACCORDANCE WITH THE AMERICANS WITH DISABILITIES ACT.
7. ALL ON-SITE PARKING SPACES WILL BE STRIPED AND SIGNED IN ACCORDANCE WITH THE MANUAL ON UNIFORM TRAFFIC DEVICES, LATEST EDITION. PARKING SPACES, DIRECTIONAL ARROWS, AND STOP BARS SHALL BE STRIPED IN WHITE. IT SHALL BE THE OWNER/DEVELOPER'S RESPONSIBILITY TO PROPERLY SIGN AND STRIPE IN ACCORDANCE WITH APPLICABLE STANDARDS.
8. THE OWNER/DEVELOPER ACKNOWLEDGES THAT THIS APPROVAL DOES NOT INCLUDE ANY WORK IN THE COUNTY RIGHT-OF-WAY. ALL RIGHT-OF-WAY WORK SHALL BE A FUNCTION OF AN APPROVED PASCO RIGHT-OF-WAY USE PERMIT.
9. ALL CLEAR-SITE AREAS SHALL BE KEPT FREE OF ANY SIGNAGE PLANTINGS, TREES, ETC. IN EXCESS OF THREE-AND-A-HALF (3-1/2) FEET IN HEIGHT.
10. NO IRRIGATION SYSTEM OR LANDSCAPING SHALL BE INSTALLED IN ANY COUNTY OR STATE RIGHT-OF-WAY WITHOUT ISSUANCE OF APPROPRIATE RIGHT-OF-WAY USE PERMIT.
11. THE OWNER/DEVELOPER ACKNOWLEDGES THAT THE SITE AND ITS SUBSEQUENT BUILDING PERMITS SHALL COMPLY WITH ALL REZONING/MPUD/PUD CONDITIONS.
12. ALL STRUCTURES, INCLUDING BUFFER WALLS, RETAINING WALLS, SIGNAGE, ETC. REQUIRE BUILDING PERMITS.

PROJECT SUMMARY

The proposed project will consist of a new McDonald's restaurant located at the 11929 US Highway 19 in Port Richey, Florida. The proposed McDonald's building will be 4,490 SF with approximately 64 seats, along with its site development features, including but not limited to required parking, vehicular/pedestrian access, vehicle use areas, and utilities.

PARKING SUMMARY

PARKING REQUIREMENT: 1 SPACES PER 150 S.F.=(4,490/150)=29.9

TOTAL SPACES PROVIDED 36	33	SPACES 9' x 20' @ 90° - 24' DRIVE ISLE
	01	SPACES 9' x 23' @ PARALLEL - 12' DRIVE ISLE
	02	HC SPACES 12' x 20' @ 90° - 24' DRIVE ISLE
TOTAL SPACES REQUIRED 30	01	BICYCLE PARKING: (0.02 PER PARKING PROVIDED)
	00	MOTORCYCLE VEHICLE SPACES (IF REQUIRED)
	64	TOTAL SEATING
		BUILDING AREA: 4,490 SF

McDONALD'S SIGN LEGEND

QTY.	MARK	DESCRIPTION
2	A	CUSTOMER ORDER DISPLAY
2	B	OPO-4 MENU BOARD
1	C	SINGLE ARM GATEWAY CLEARANCE SIGN
1	D	"ANY LANE - ANY TIME" SIGN
1	E	OPO-1 PRE-SELL BOARD
2	F	DIRECTIONAL SIGN "WELCOME" / "ENTER"
2	G	DIRECTIONAL SIGN "THANK YOU" / "EXIT"
1	H	FLAG POLE

REFER TO BUILDING ELEVATION FOR BUILDING SIGNAGE. SIGNAGE APPROVAL IS BY A SEPARATE SUBMITTAL AND APPROVAL PROCESS.

REV	DATE	DESCRIPTION	BY	ISSUE REF
-	-	-	-	-
-	-	-	-	-
-	-	-	-	-
-	-	-	-	-
-	-	-	-	-

Adams
27524 Cashford Circle, Suite 191 ■ Wesley Chapel, Florida 33544 ■ (813) 929-1499

TIM D. HOOES LICENSE No 67017 STATE OF FLORIDA PROFESSIONAL ENGINEER
9-22-15

Certificate Of Authorization: #27614

MCDONALD'S L/C: 009-2596

OFFICE: FLORIDA REGION
ADDRESS: KROC DRIVE - OAK BROOK, ILLINOIS 60521

McDonald's USA, LLC

These drawings and specifications are the confidential and proprietary property of McDonald's USA, LLC and shall not be reproduced in whole or in part without permission of McDonald's USA, LLC. They are not to be used on any other project, on any different site or at a later time, unless specifically site in conjunction with its issue date and are not suitable for use on a different site or at a later time. Use of these drawings for reference or example on another project requires the services of properly licensed architects and engineers. Reproduction of the contract documents for reuse on another project is not authorized.

PLAN APPROVALS

	SIGNATURE (2 REQUIRED)	DATE
REGIONAL MGR.		
CONST. MGR.		
OPERATIONS DEPT.		
REAL ESTATE DEPT.		

CO-SIGN SIGNATURES

CONTRACTOR		
OWNER		

11929 US HIGHWAY 19
PORT RICHEY, FLORIDA

ADAMS JOB NO.	2014.086	
STATUS	DATE	BY
DATE DRAWN	SEPT 2015	EAO
PLAN CHECKED	SEPT 2015	TDH
AS-BUILT		

SITE PLAN

C4.0

© Copyright 2015, Adams Engineering

FULL PATH: _Projects\2014\2014.086_MCD_Hudson Ranch - Pasco FL\Drawings\03 - Production\C4.0 SITE PLAN
PLOTTED BY: Edgar Ortiz
PLOT DATE: Tuesday, September 22, 2015
PLOT TIME: 3:45:29 PM
PLOTTER: Adobe PDF
FILENAME: C4.0 SITE PLAN.dwg

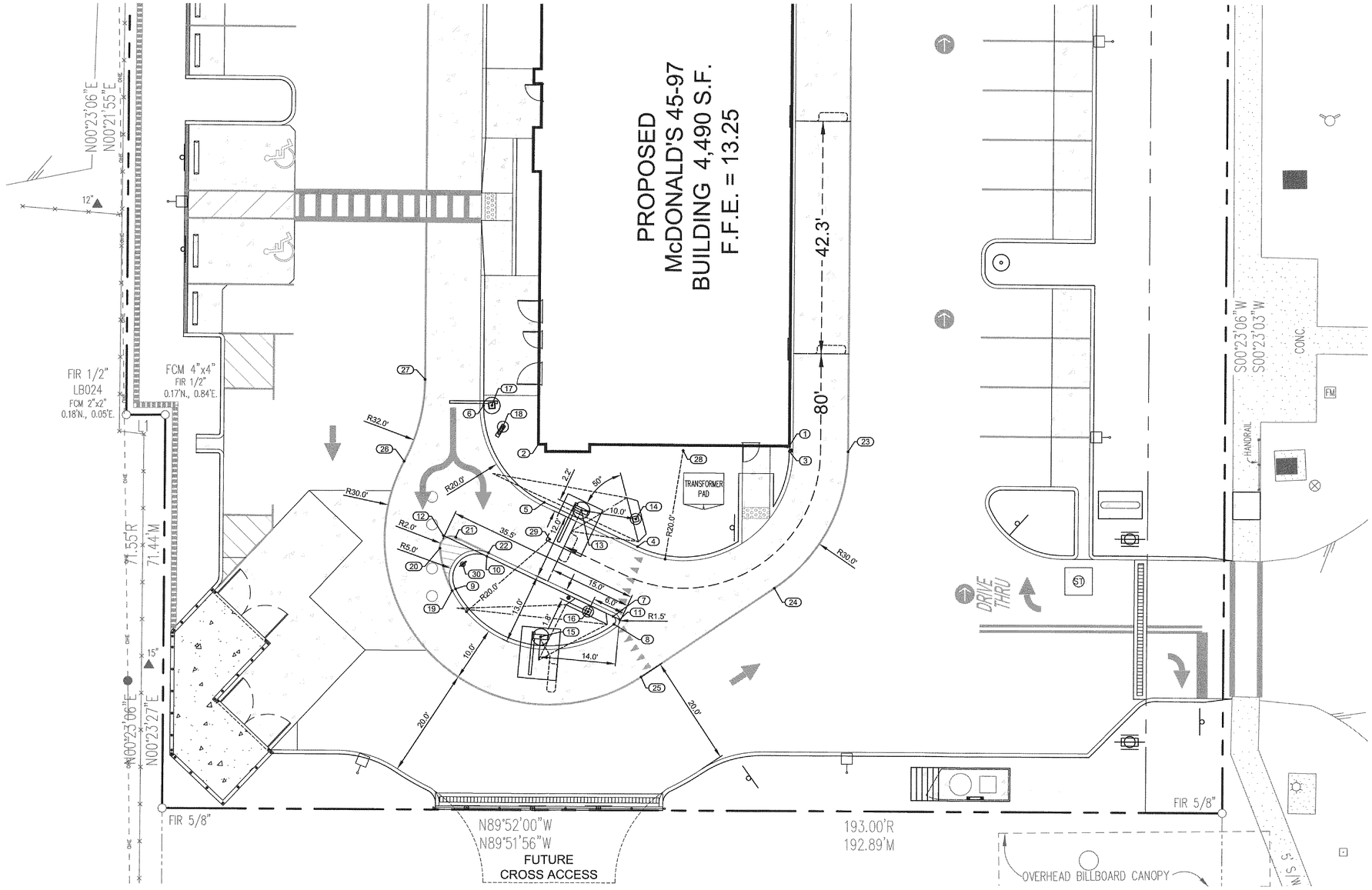

COORDINATE CONTROL TABLE			
POINT #	NORTHING	EASTING	DESCRIPTION
1	1453620.32	431033.44	BUILDING CORNER
2	1453620.62	430987.78	BUILDING CORNER
3	1453619.37	431033.44	POINT OF CURVATURE
4	1453602.03	431005.82	POINT OF TANGENCY
5	1453610.07	430988.87	POINT OF CURVATURE
6	1453627.67	430977.82	POINT OF TANGENCY
7	1453589.37	431001.41	POINT OF CURVATURE
8	1453587.95	431001.56	POINT OF COMPOUND CURVATURE
9	1453594.34	430972.74	POINT OF COMPOUND CURVATURE
10	1453600.27	430978.43	POINT OF TANGENCY
11	1453588.80	431002.60	POINT OF INTERSECTION
12	1453604.02	430970.53	POINT OF INTERSECTION
13	1453608.61	430995.62	PRIMARY C.O.D.
14	1453607.05	431005.50	PRIMARY MENU BOARD
15	1453585.65	430988.23	SECONDARY C.O.D.

COORDINATE CONTROL TABLE			
POINT #	NORTHING	EASTING	DESCRIPTION
16	1453590.24	430996.84	SECONDARY MENU BOARD
17	1453627.66	430979.32	SINGLE ARM GATEWAY CLEARANCE SIGN
18	1453623.80	430981.34	PRE-SELL BOARD
19	1453594.03	430972.15	STRIPE POINT OF CURVATURE
20	1453601.73	430969.92	STRIPE POINT OF COMPOUND CURVATURE
21	1453603.69	430972.77	STRIPE POINT OF TANGENCY
22	1453600.87	430978.72	STRIPE POINT
23	1453619.30	431044.10	STRIPE POINT OF CURVATURE
24	1453594.54	431030.74	STRIPE POINT OF TANGENCY
25	1453578.37	431006.49	STRIPE POINT OF CURVATURE
26	1453617.49	430963.40	STRIPE POINT OF REVERSE CURVATURE
27	1453632.38	430967.19	STRIPE POINT OF TANGENCY
28	1453619.50	431014.10	RADIUS POINT
29	1453603.34	430989.85	RADIUS POINT
30	1453598.78	430974.06	ANY LANE-ANY TIME SIGN

Know what's below.
Call before you dig.

N

McDonald's

5 15
0 10 20
SCALE: 1" = 10'

THESE PLANS ARE SUBJECT TO REVIEW & APPROVAL BY JURISDICTIONAL ENTITIES.

BENCHMARK DESCRIPTION

THE ELEVATIONS SHOWN HEREON ARE BASED ON THE NORTH AMERICAN VERTICAL DATUM OF 1988 (N.A.V.D. 1988) AS ESTABLISHED FROM N.G.S. BENCHMARK "V 659", HAVING AN ELEVATION OF 9.02 FEET N.A.V.D. 1988. TO CONVERT ELEVATIONS TO THE NATIONAL GEODETIC VERTICAL DATUM OF 1929 (N.G.V.D. 1929), ADD 0.85 FEET.

NOTICE TO CONTRACTOR

1. COORDINATES SHOWN ARE AT BACK OF CURB OR CENTERLINE OF FOUNDATION OR STRIPE.
2. VERIFY LOCATION OF CODS AND MENU BOARDS WITH ACM PRIOR TO POURING FOUNDATIONS.
3. COORDINATES BASED OFF OF GEODETIC NORTH AS PROVIDED BY SURVEYOR.
4. IT IS REQUIRED BY McDONALD'S THAT ALL DRIVE THRU EQUIPMENT AND PAVEMENT IMPROVEMENTS IN THE DRIVE THRU AREA BE FIELD LOCATED AND STAKED BY A PROFESSIONAL SURVEYOR.

REV	DATE	DESCRIPTION	BY	ISSUE REF.
---	---	---	---	---
---	---	---	---	---
---	---	---	---	---
---	---	---	---	---
---	---	---	---	---

Adams
27524 Cashford Circle, Suite 101 ■ Wesley Chapel, Florida 33544 ■ (813) 929-7499

TIM D. HODES
LICENSE
9-22-15
No 67017
STATE OF
FLORIDA
PROFESSIONAL ENGINEER

Certificate Of Authorization: #27614

MCDONALD'S L.C.:
069-2596

McDonald's USA, LLC

These drawings and specifications are the confidential and proprietary property of McDonald's USA, LLC and shall not be copied or reproduced without written authorization. The contract documents were prepared for use on this specific project and site and are not to be used on any other project. Use of these documents by others or of these drawings for reference or example on another project requires the services of properly licensed architects and engineers. Reproduction of the contract documents for reuse on another project is not authorized.

OFFICE	FLORIDA REGION
ADDRESS	KROC DRIVE - OAK BROOK, ILLINOIS 60521

11929 US HIGHWAY 19
PORT RICHEY, FLORIDA

PLAN APPROVALS

SIGNATURE (2 REQUIRED)	DATE
REGIONAL MGR.	
CONST. MGR.	
OPERATIONS DEPT.	
REAL ESTATE DEPT.	

CO-SIGN SIGNATURES

CONTRACTOR	
OWNER	

ADAMS JOB NO.	2014.086	
STATUS	DATE	BY
DATE DRAWN	SEPT 2015	EAO
PLAN CHECKED	SEPT 2015	TDH
AS-BUILT		

COORDINATE CONTROL PLAN

C5.0

© Copyright 2015, Adams Engineering

FULL PATH: L:\Projects\2014\2014.086_McD_Hudson Ridge - Pasco FL\Drawings\03 - Production\L\Projects\2014\2014.086_McD_Hudson Ridge - Pasco FL\Drawings\03 - Production\C5.0 COORDINATE CONTROL PLAN
PLOTTED BY: Edgar Ortiz
PLOT DATE: Tuesday, September 22, 2015
PLOT TIME: 5:39:46 PM
PLOTTER: Adobe PDF
FILENAME: C5.0 COORDINATE CONTROL PLAN.dwg

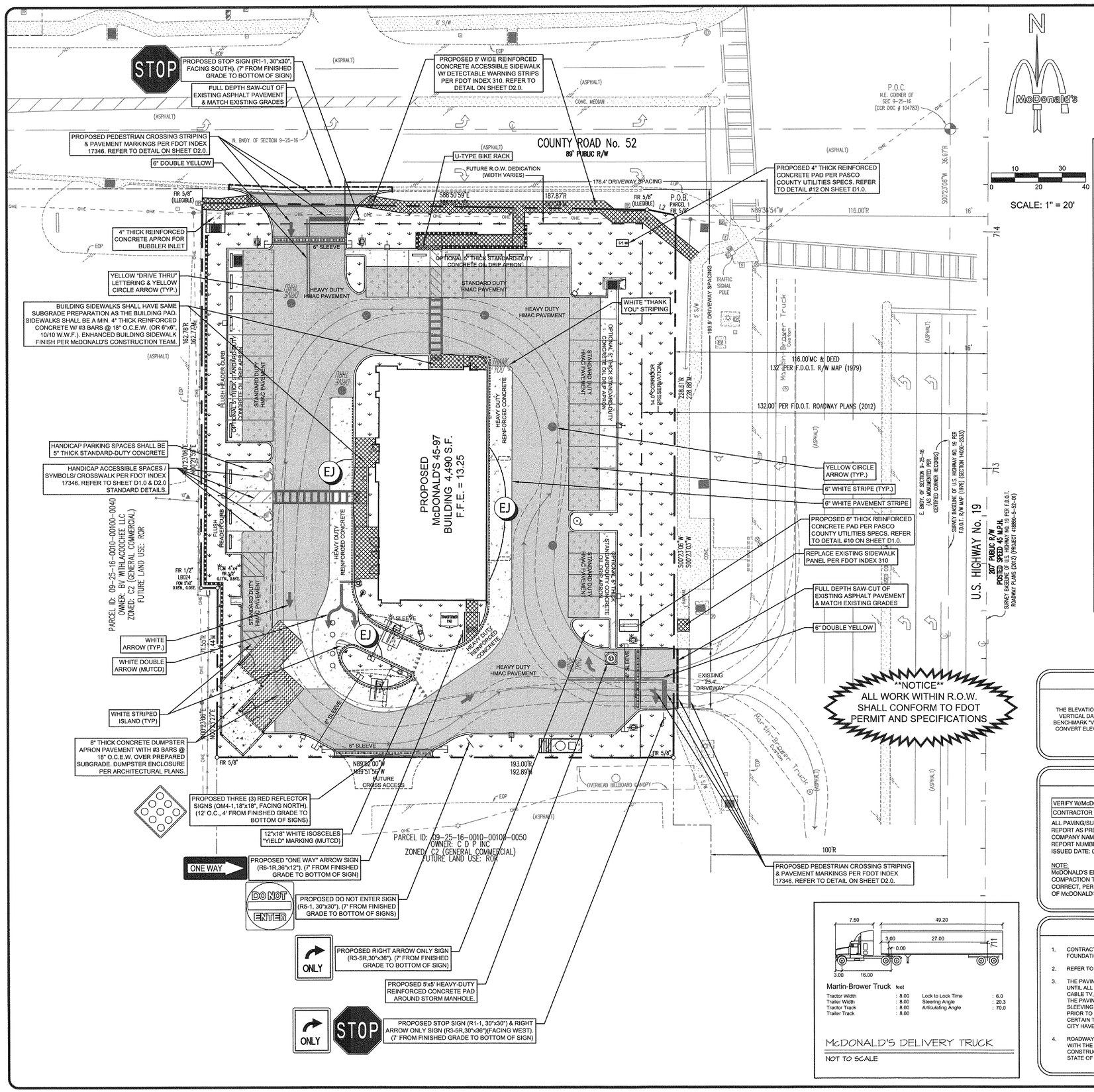

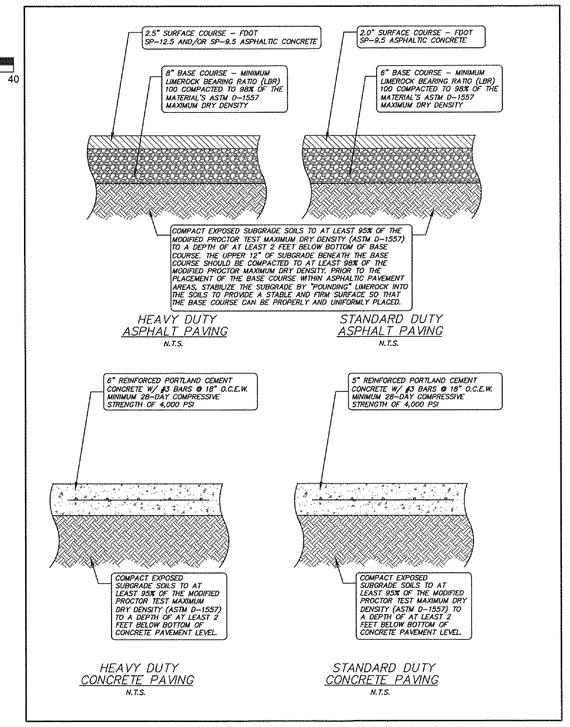

Know what's below. Call before you dig.

THESE PLANS ARE SUBJECT TO REVIEW & APPROVAL BY JURISDICTIONAL ENTITIES.

BENCHMARK DESCRIPTION

THE ELEVATIONS SHOWN HEREON ARE BASED ON THE NORTH AMERICAN VERTICAL DATUM OF 1988 (N.A.V.D. 1988) AS ESTABLISHED FROM N.G.S. BENCHMARK "V 659", HAVING AN ELEVATION OF 9.02 FEET N.A.V.D. 1988. TO CONVERT ELEVATIONS TO THE NATIONAL GEODETIC VERTICAL DATUM OF 1929 (N.G.V.D. 1929), ADD 0.85 FEET.

PAVING SPECIFICATION

VERIFY W/McDONALD'S:	ASPHALT: ☒	CONCRETE: ☒	
CONTRACTOR TO BID:	ASPHALT: ☒	CONCRETE: ☒	

ALL PAVING/SUBGRADE SPECS TO COMPLY WITH GEOTECHNICAL REPORT AS PREPARED BY:
COMPANY NAME: UNIVERSAL ENGINEERING SCIENCES
REPORT NUMBER: 0830.1500222
ISSUED DATE: 09/22/2015

NOTE:
McDONALD'S ENGINEER RESERVES THE RIGHT TO REQUEST A COMPACTION TEST AND/OR A CORE SAMPLE. IF TESTS PROVE CORRECT, PER ABOVE SPECIFICATION, TESTS WILL BE AT THE EXPENSE OF McDONALD'S, OTHERWISE, G.C. WILL BE CHARGED.

PAVING NOTES

1. CONTRACTOR TO REFER TO BUILDING STRUCTURAL PLAN FOR FOUNDATION DESIGN & PAVEMENT CONNECTION DETAILS.
2. REFER TO SHEET C1.1 FOR ADDITIONAL CONSTRUCTION NOTES.
3. THE PAVING CONTRACTOR SHALL NOT PLACE PERMANENT PAVEMENT UNTIL ALL SLEEVING FOR IRRIGATION, ELECTRIC, GAS, TELEPHONE, CABLE TV, SITE IRRIGATION, ETC. HAS BEEN INSTALLED. IT SHALL BE THE PAVING CONTRACTORS RESPONSIBILITY TO INSURE THAT ALL SLEEVING IS IN PLACE PRIOR TO PLACING OF PERMANENT PAVING. PRIOR TO STARTING CONSTRUCTION, THE CONTRACTOR SHALL MAKE CERTAIN THAT ALL REQUIRED PERMITS AND APPROVALS FROM THE CITY HAVE BEEN OBTAINED.
4. ROADWAY IMPROVEMENTS SHALL BE IN SUBSTANTIAL CONFORMANCE WITH THE "MANUAL OF UNIFORM MINIMUM STANDARDS FOR DESIGN, CONSTRUCTION, AND MAINTENANCE OF STREETS AND HIGHWAY", STATE OF FLORIDA, LATEST EDITION.

PAVING LEGEND

- 4" THICK REINFORCED CONCRETE SIDEWALK (MIN.) W/ 6"x6", 10/10 W.W.F. (WELDED WIRE FABRIC) PER FDOT INDEX 300.
- 6" HEAVY-DUTY CONCRETE PAVEMENT WITH #3 BARS @ 18" O.C.E.W. OVER PREPARED SUBGRADE (OMIT STEEL @ DETECTOR LOOPS)
- DUMPSTER APRON 8" CONCRETE PAVEMENT WITH #3 BARS @ 18" O.C.E.W. OVER PREPARED SUBGRADE
- 2.5" HMAC PAVEMENT HEAVY DUTY PAVEMENT OVER PREPARED BASE / SUBGRADE
- 2.0" HMAC PAVEMENT STANDARD DUTY PAVEMENT OVER PREPARED BASE / SUBGRADE
- LANDSCAPE AREA REFER TO LANDSCAPE PLAN
- IRRIGATION SLEEVES W/ CAP (RE: IRRIGATION PLAN)
- SAWCUT LINE
- EJ EXPANSION JOINTS

ALL BASE, SUBGRADE, FLEXIBLE SURFACE COURSE, AND RIGID PAVEMENT (CONCRETE SURFACE) PREPARATION SHALL CONFORM TO THE RECOMMENDATIONS OF MATERIALS & CONSTRUCTION OF THE UNIVERSAL ENGINEERING SCIENCES GEOTECHNICAL REPORT (PROJECT No. 0830.1500222, 09/22/2015)

PROPERTY LINE DIMENSIONS

LINE L1
N89°52'00"W – 7.00'R
S89°46'36"W – 7.07'M

LINE L2
S78°42'07"E – 12.36'R
S78°41'59"E – 12.29'M

REV	DATE	DESCRIPTION	BY	ISSUE REF
---	---	---	---	---

Adams
27534 Cashford Circle, Suite 101 ■ Wesley Chapel, Florida 33544 ■ (813) 929-7499

JIM D. HODES LICENSE No 67017 STATE OF FLORIDA PROFESSIONAL ENGINEER 9-22-15

Certificate Of Authorization: #27614

MCDONALD'S L/C: 000-2936

OFFICE: FLORIDA REGION
ADDRESS: KROC DRIVE - OAK BROOK, ILLINOIS 60521

McDonald's USA, LLC

These drawings and specifications are the confidential and proprietary property of McDonald's USA, LLC and shall not be reproduced in whole or in part without permission. The information on these drawings is proprietary in nature and was prepared for use on a specific site in conjunction with its issue date and are not suitable for use on a different site or at a different time. Use of these drawings for references or example on another project requires the services of properly licensed architects and engineers. Reproduction of the contract documents for reuse on another project is not authorized.

11929 US HIGHWAY 19
PORT RICHEY, FLORIDA

PLAN APPROVALS

	SIGNATURE (2 REQUIRED)	DATE
REGIONAL MGR.		
CONST. MGR.		
OPERATIONS DEPT.		
REAL ESTATE DEPT.		

CO-SIGN SIGNATURES

CONTRACTOR	
OWNER	

ADAMS JOB NO.	2014.086	
STATUS	DATE	BY
DATE DRAWN	SEPT 2015	EAO
PLAN CHECKED	SEPT 2015	TDH
AS-BUILT		

PAVING PLAN

C6.0

© Copyright 2015, Adams Engineering

FULL PATH: I:_Projects\2014\2014.086_McD - Hudson Reb - Pasco FL\Drawings\03 - Production\1_Projects\2014\2014.086_McD - Hudson Reb - Pasco FL\Drawings\03 - Production\C6.0 PAVING PLAN
PLOTTER: Adobe PDF
PLOT TIME: 6:46:29 PM
PLOT DATE: Tuesday, September 22, 2015
PLOTTED BY: Edgar Ortiz
FILENAME: C6.0 PAVING PLAN.dwg

FULL PATH: I:_Projects\2014\2014.086_McD_Hudson Relo - Pasco FL\Drawings\03 - Production I:_Projects\2014\2014.086_McD_Hudson Relo - Pasco FL\Drawings\03 - Production\C7.0 GRADING PLAN
PLOTTER: Adobe PDF
PLOT TIME: 6:56:55 PM
PLOT DATE: Tuesday, September 22, 2015
PLOTTED BY: Edgar Ortiz
FILENAME: C7.0 GRADING PLAN.dwg

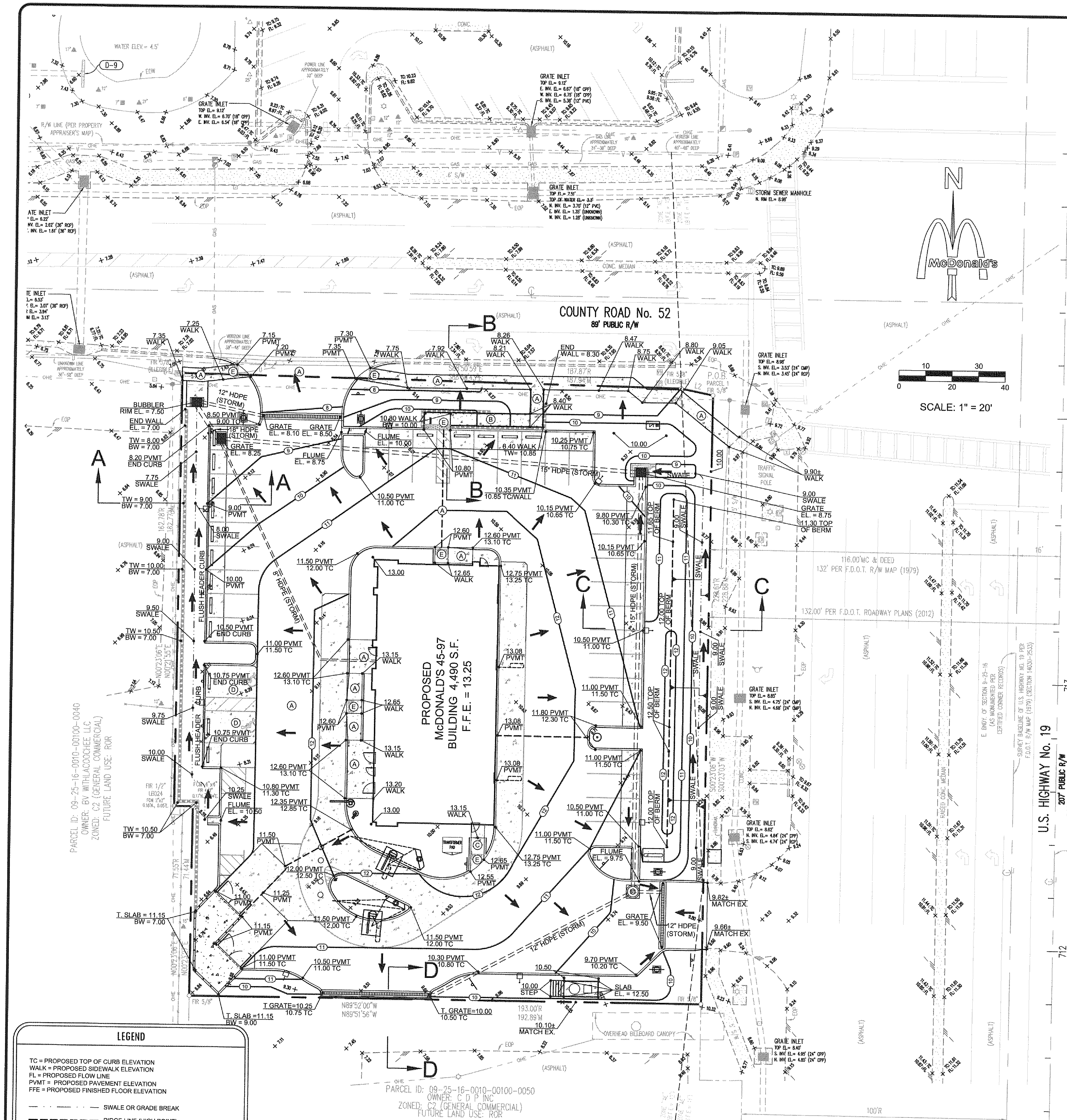

LEGEND

TC = PROPOSED TOP OF CURB ELEVATION
WALK = PROPOSED SIDEWALK ELEVATION
FL = PROPOSED FLOW LINE
PVMT = PROPOSED PAVEMENT ELEVATION
FFE = PROPOSED FINISHED FLOOR ELEVATION

- SWALE OR GRADE BREAK
- RIDGE LINE (HIGH POINT)
- XXX — PROPOSED CONTOUR
- PROPOSED FLOW ARROWS
- 9.32 — EXISTING SPOT GRADES
- 9.50 PVMT / 10.00 TC — PROPOSED SPOT GRADES

PROPERTY LINE DIMENSIONS

LINE L1
N89°52'00"W – 7.00'R
S89°46'36"W – 7.07'M

LINE L2
S78°42'07"E – 12.36'R
S78°41'59"E – 12.29'M

BENCHMARK DESCRIPTION

THE ELEVATIONS SHOWN HEREON ARE BASED ON THE NORTH AMERICAN VERTICAL DATUM OF 1988 (N.A.V.D. 1988) AS ESTABLISHED FROM N.G.S. BENCHMARK "V 659", HAVING AN ELEVATION OF 9.02 FEET N.A.V.D. 1988. TO CONVERT ELEVATIONS TO THE NATIONAL GEODETIC VERTICAL DATUM OF 1929 (N.G.V.D. 1929), ADD 0.85 FEET.

THESE PLANS ARE SUBJECT TO REVIEW & APPROVAL BY JURISDICTIONAL ENTITIES.

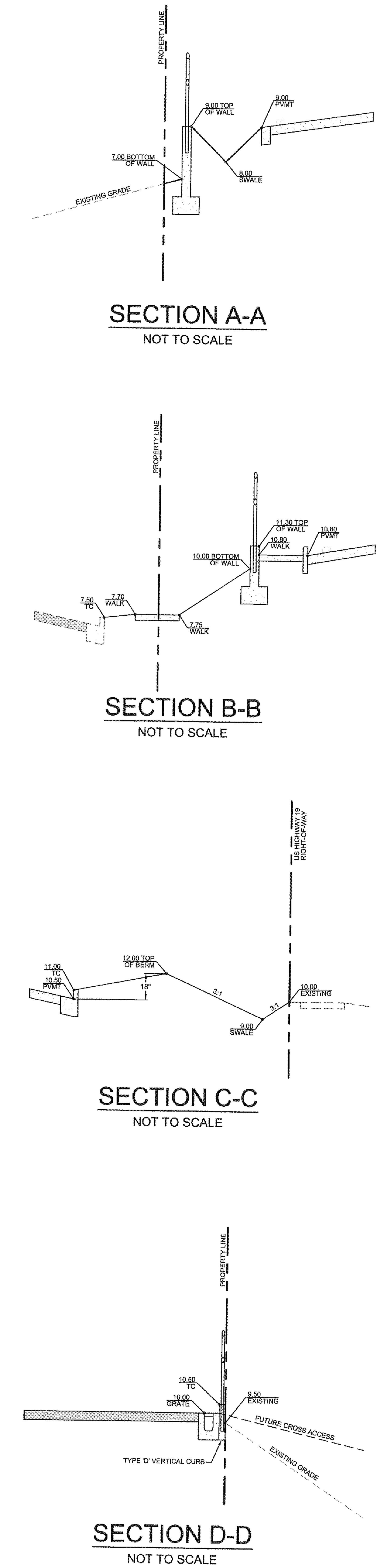

Know what's below. Call before you dig.

2012 FLORIDA ACCESSIBILITY CODE

(A) ACCESSIBLE ROUTES: (CHAPTER 4 - SECTION 403)

The running slope of walking surfaces shall not be steeper than 1:20. The cross slope of walking surfaces shall not be steeper than 1:48.

The clear width of walking surfaces shall be 36 inches minimum. The clear width shall be permitted to be reduced to 32 inches minimum for a legth of 24 inches maximum provided that reduced width segments are separated by segments that are 48 inches long minimum and 36 inches wide minimum. Where the accessible route makes a 180 degree turn around an element which is less than 48 inches wide, clear width shall be 42 inches minimum approaching the turn, 48 inches minimum at the turn and 42 inches minimum leaving the turn. An accessible route with a clear width less than 60 inches shall provide passing spaces at intervals of 200 feet maximum. Passing spaces shall be at least 60 inches by 60 inches minimum.

(B) RAMPS: (CHAPTER 4 - SECTION 405)

Ramp runs shall have a running slope not steeper than 1:12. The cross slope of ramp runs shall not be steeper than 1:48. Changes in level other than the running slope and cross slope are not permitted on ramp runs.

The clear width of a ramp run and, where handrails are provided, the clear width between handrails shall be 36 inches minimum.

The rise for any ramp run shall be 30 inches maximum. Ramps shall have landings at the top and the bottom of each ramp run. Landings slopes shall not be steeper than 1:48. The landing clear width shall be at least as wide as the widest ramp run leading to the landing. The landing clear length shall be 60 inches long minimum. Ramps that change directions between runs at landings shall have a clear landing 60 inches by 60 inches minimum.

Ramp runs with a rise greater than 6 inches shall have handrails complying with Section 505. Edge protection shall be provided on each side of ramp runs and at each side of ramp landing complying with Section 405.9. The floor or ground surface of the ramp run or landing shall extend 12 inches minimum beyond the inside face of a handrail.

(C) CURB RAMPS: (CHAPTER 4 - SECTION 406)

Curb ramp runs shall have a running slope not steeper than 1:12. The cross slope of ramp runs shall not be steeper than 1:48. Counter slopes of adjoining gutters and road surfaces immediately adjacent to the curb ramp shall not be steeper than 1:20. The adjacent surfaces at transitions at curb ramps to walk, gutters, and streets shall be at the same level.

Where provided, curb ramp flares shall not be steeper than 1:10.

Landings shall be provided at the tops of curb ramps. The landing clear length shall be 36 inches minimum. The landing clear width shall be at least as wide as the curb ramp, excluding flared sides, leading to the landing. In alterations, where there is no landing at the top of curb ramps, curb ramp flares shall be provided and shall not be steeper than 1:12.

Curb ramps and the flared sides of curb ramps shall be located so that they do not project into vertical traffic lanes, parking spaces, or parking access aisles.

Raised islands in crossings shall be cut through level with the street or have curb ramps at both sides. Each curb ramp shall have a level area 48 inches long minimum by 36 inches wide minimum at the top of the curb ramp in the part of the island intersected by the crossing.

Detectable warning shall extend the full width of the curb ramp and shall extend either the full depth of the curb ramp or 24 inches deep minimum measured from the back of the curb on the ramp surface.

(D) PARKING SPACES: (CHAPTER 5 - SECTION 502)

Each parking space must be at least 12 feet wide, shall be marked to define the width, and shall have an adjacent access aisle. Access aisles shall adjoin an accessible route that is at least 44 inches wide so that users are not compelled to walk or wheel behind parked vehicles. Access aisles serving car and van parking spaces shall be 60 inches wide minimum. Two parking spaces shall be permitted to share a common access aisle. Access aisles shall extend the full length of the parking spaces they serve. The access aisles must be striped diagonally to designate it as a no-parking zone

Access aisles shall be at the same level as the parking spaces they serve and slopes shall not be steeper than 1:48 in all directions.

Each accessible parking space must be prominently outlined with blue striping to be clearly distinguishable as a parking space designated for persons who have disabilities and must be posted with a permanent above-grade sign bearing the international symbol of accessibility, meeting the requirements of color and design approved by the Department of Transportation and the caption "parking by disabled permit only". Posted signage shall also indicate the penalty for illegal use of the space per jurisdictional entity.

(E) DETECTABLE WARNINGS: (CHAPTER 7 - SECTION 705)

Detectable warnings shall consist of a surface of truncated domes and shall comply with section 705. Detectable warning surfaces shall contrast visually with adjacent walking surfaces either light-on-dark, or dark-on-light. Detectable warning surfaces at platform boarding edges shall be 24 inches wide and shall extend the full length of the public use area of the platform.

** FEMA NOTE **

Flood Statement: According to Community Panel No. 12101C0180F, Dated SEPTEMBER 26, 2014, of the Federal Emergency Management Agency, National Flood Insurance Program Map, this property is located in Zone AE (B.F.E. =12), which is a special flood hazard area. If this site is not within an identified special flood hazard area, this flood statement does not imply that the property and/or the structures thereon will be free from flooding or flood damage. On rare occasions, greater floods can and will occur and flood heights may be increased by man-made or natural causes. This statement shall not create liability on the part of the Surveyor or Engineer.

*** CONSTRUCTION NOTES ***

1. THE EARTHWORK FOR ALL BUILDING FOUNDATIONS AND SLABS SHALL BE IN ACCORDANCE WITH ARCHITECTURAL BUILDING PLANS AND SPECIFICATIONS.
2. ADJUST PAVEMENT AND/OR CURB ELEVATIONS AS NECESSARY TO ASSURE AS SMOOTH FIT AND CONTINUOUS GRADE WITH EXISTING.
3. CONTRACTOR IS RESPONSIBLE FOR VERIFYING ALL UTILITIES AND NOTIFYING THE APPROPRIATE UTILITY COMPANY PRIOR TO BEGINNING CONSTRUCTION.
4. CONTRACTOR SHALL VERIFY HORIZONTAL AND VERTICAL LOCATION OF ALL EXISTING STORM SEWER STRUCTURES, PIPES, AND ALL UTILITIES PRIOR TO CONSTRUCTION.
5. CONTRACTOR IS RESPONSIBLE FOR REPAIRS OF DAMAGE TO ANY EXISTING IMPROVEMENTS DURING CONSTRUCTION, SUCH AS BUT NOT LIMITED TO DRAINAGE, UTILITIES, PAVEMENT, STRIPING, CURBS, ETC. REPAIRS SHALL BE EQUAL TO OR BETTER THAN EXISTING CONDITIONS.
6. CONTRACTOR TO ADJUST ALL UTILITY BOXES, COVERS, CLEAN-OUTS, ETC. TO FINISHED GRADE. ADD EXTENSIONS/MODIFIED TOPS AS NECESSARY.
7. PROPOSED SPOT GRADES SHOWN ARE TO TOP OF PAVEMENT UNLESS OTHERWISE NOTED.
8. EXISTING AND PROPOSED GRADE CONTOUR INTERVALS SHOWN AT ONE FOOT (1')
9. ALL UN-SURFACED AREAS DISTURBED BY GRADING OPERATION SHALL RECEIVE FOUR (4) INCHES OF TOPSOIL. CONTRACTOR SHALL APPLY STABILIZATION FABRIC TO ALL SLOPES 3H:1V OR STEEPER. CONTRACTOR SHALL GRASS DISTURBED AREAS IN ACCORDANCE WITH STANDARD SPECIFICATIONS UNTIL A HEALTHY STAND OF GRASS IS OBTAINED.
10. FOR LOCATION OF ALL UTILITY ENTRANCES, SEE ARCHITECTURAL PLANS AND SPECIFICATIONS.
11. CONTRACTOR SHALL COORDINATE WITH ARCHITECTURAL PLANS, POWER COMPANY, TELEPHONE COMPANY & GAS COMPANY FOR ACTUAL ROUTING OF POWER AND SERVICES TO BUILDING.
12. CONSTRUCTION SHALL COMPLY WITH ALL GOVERNING CODES AND BE CONSTRUCTED TO SAME.
13. AFTER PERMITS HAVE BEEN OBTAINED & EROSION CONTROL MEASURES INSTALLED, THE CONTRACTOR SHALL GRADE BUILDING PAD TO 0 TO -1/2" OF SUBGRADE.

REV	DATE	DESCRIPTION	BY	ISSUE REF
---	---	---	---	---
---	---	---	---	---
---	---	---	---	---
---	---	---	---	---

Adams
27524 Cashford Circle, Suite 101 ■ Wesley Chapel, Florida 33544 ■ (813) 929-7499

TIM D. HODES LICENSE No 67017 STATE OF FLORIDA PROFESSIONAL ENGINEER 9-22-15

Certificate Of Authorization: #27614

OFFICE: FLORIDA REGION
ADDRESS: KROC DRIVE - OAK BROOK, ILLINOIS 60521
MCDONALD'S L/C: 009-2596

McDonald's USA, LLC

These drawings and specifications are the confidential and proprietary property of McDonald's USA, LLC and shall not be copied or reproduced without written authorization. The contract documents were prepared for use on this specific site in conjunction with its issue date and are not suitable for use on a different site or at a later time. Use of these drawings for reference or example on another project requires the services of properly licensed architects and engineers. Reproduction of the contract documents for reuse on another project is not authorized.

11929 US HIGHWAY 19
PORT RICHEY, FLORIDA

PLAN APPROVALS	SIGNATURE (2 REQUIRED)	DATE
REGIONAL MGR.		
CONST. MGR.		
OPERATIONS DEPT.		
REAL ESTATE DEPT.		
CO-SIGN SIGNATURES		
CONTRACTOR		
OWNER		

ADAMS JOB NO.	2014.086	
STATUS	DATE	BY
DATE DRAWN	SEPT 2015	EAO
PLAN CHECKED	SEPT 2015	TDH
AS-BUILT		

GRADING PLAN

C7.0

© Copyright 2015, Adams Engineering

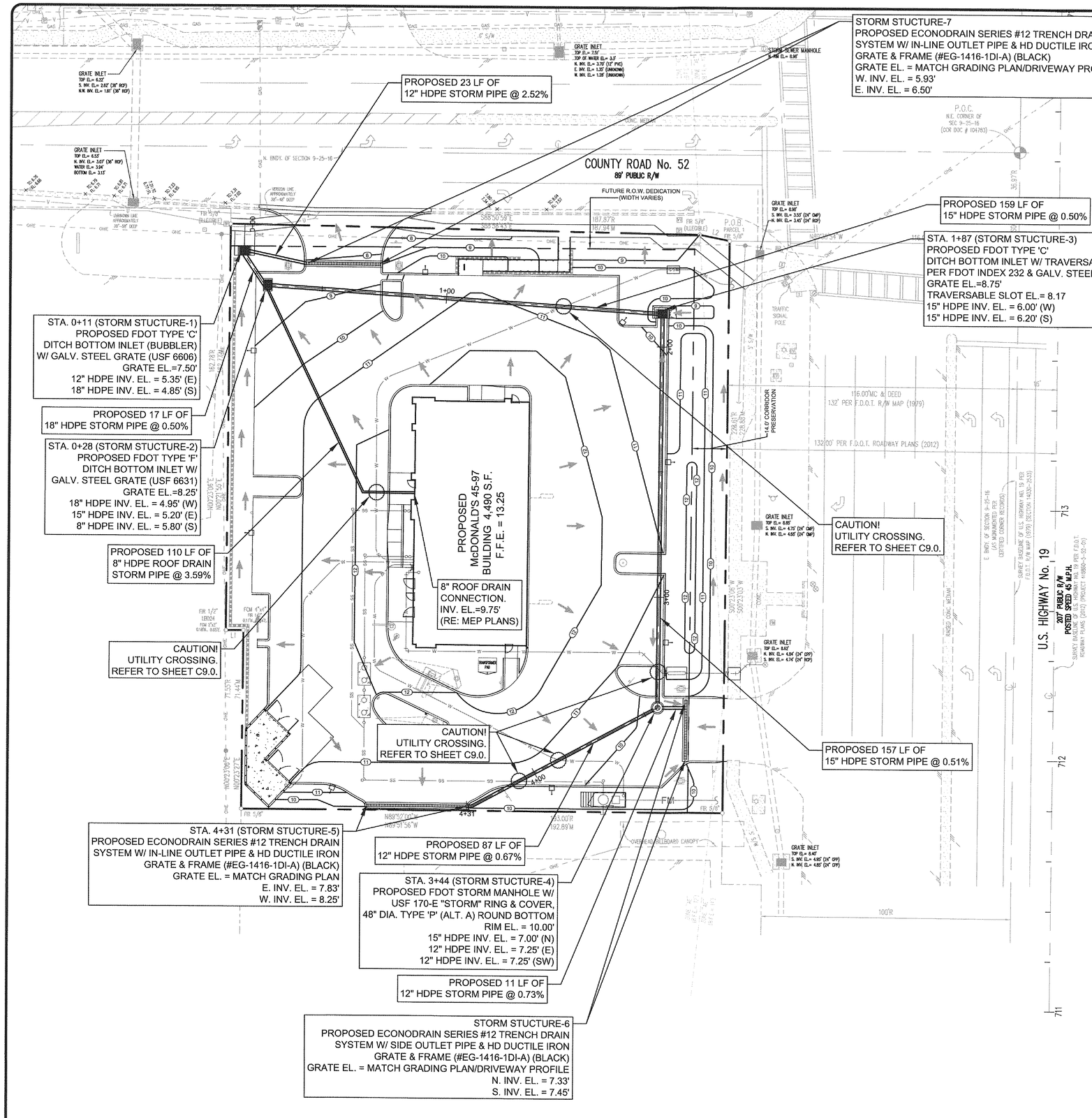

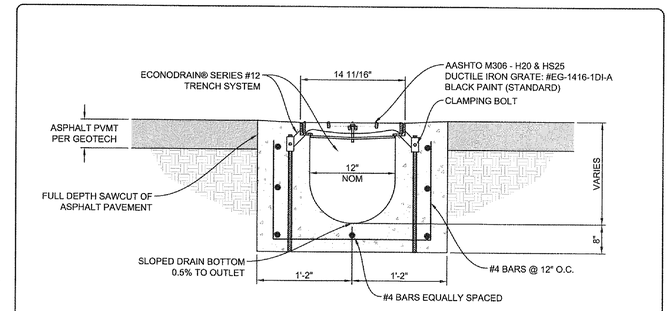

ECONODRAIN SERIES #12 TRENCH DRAIN SECTION
REFER TO SHEET D1.0 FOR INSTALLATION

PROJECT'S DRAINAGE NARRATIVE

THE PROPOSED PROJECT WILL CONSIST OF A NEW MCDONALD'S RESTAURANT LOCATED AT THE 11929 US HIGHWAY 19 IN PORT RICHEY, FLORIDA. THE PROPOSED SITE WILL PROVIDE A STORMWATER MANAGEMENT SYSTEM.

PRE-DEVELOPMENT CONDITIONS:

IMPERVIOUS AREA:(BUILDING, SIDEWALKS, & PAVING)	36,193 SF (79%)
PERVIOUS AREA:	9,803 SF (21%)
TOTAL LAND AREA (IMPERVIOUS + PERVIOUS AREA):	45,996 SF

POST-DEVELOPMENT CONDITIONS:

IMPERVIOUS AREA:(BUILDING, SIDEWALKS, & PAVING)	34,062 SF (74%)
PERVIOUS AREA:	11,934 SF (26%)
TOTAL LAND AREA (IMPERVIOUS + PERVIOUS AREA):	45,996 SF

BENCHMARK DESCRIPTION

THE ELEVATIONS SHOWN HEREON ARE BASED ON THE NORTH AMERICAN VERTICAL DATUM OF 1988 (N.A.V.D. 1988) AS ESTABLISHED FROM N.G.S. BENCHMARK "V 659", HAVING AN ELEVATION OF 9.02 FEET N.A.V.D. 1988. TO CONVERT ELEVATIONS TO THE NATIONAL GEODETIC VERTICAL DATUM OF 1929 (N.G.V.D. 1929), ADD 0.85 FEET.

** FEMA NOTE **

Flood Statement: According to Community Panel No. 12101C0180F, Dated SEPTEMBER 26, 2014, of the Federal Emergency Management Agency, National Flood Insurance Program Map, this property is located in Zone AE (B.F.E. =12), which is a special flood hazard area. If this site is not within an identified special flood hazard area, this flood statement does not imply that the property and/or the structures thereon will be free from flooding or flood damage. On rare occasions, greater floods can and will occur and flood heights may be increased by man-made or natural causes. This statement shall not create liability on the part of the Surveyor or Engineer.

PROPERTY LINE DIMENSIONS

LINE L1
N89°52'00"W - 7.00'R
S89°46'36"W - 7.07'M

LINE L2
S78°42'07"E - 12.36'R
S78°41'59"E - 12.29'M

LEGEND

XXX	PROPOSED CONTOUR
	PROPOSED DRAINAGE DIRECTION
+ 15.34 / 15.29	EXISTING SPOT ELEVATION

N

SCALE: 1" = 20'

THESE PLANS ARE SUBJECT TO REVIEW & APPROVAL BY JURISDICTIONAL ENTITIES.

Know what's below. Call before you dig.

REV	DATE	DESCRIPTION	BY	ISSUE REF

Adams
27524 Chalfont Circle, Suite 101 ■ Wesley Chapel, Florida 33544 ■ (813) 929-7409

TIM D. HODES
LICENSE No 67017
STATE OF FLORIDA
PROFESSIONAL ENGINEER

Certificate Of Authorization: #27614

MCDONALD'S USA, LLC: 009-2936

OFFICE: FLORIDA REGION
ADDRESS: KROC DRIVE - OAK BROOK, ILLINOIS 60521

McDonald's USA, LLC

These drawings and specifications are the confidential and proprietary property of McDonald's USA, LLC and shall not be reproduced in whole or in part without permission. The rights of ownership and use are reserved by McDonald's USA, LLC. Any use of these drawings for other than the current site or at a later time, use in conjunction with its issue date and are not suitable for use on a different site or at a later time. Use of these drawings for reference or example on another project requires the services of properly licensed architects and engineers. Reproduction of the contract documents for reuse on another project is not authorized.

11929 US HIGHWAY 19
PORT RICHEY, FLORIDA

PLAN APPROVALS

SIGNATURE (2 REQUIRED)	DATE
REGIONAL MGR.	
CONST. MGR.	
OPERATIONS DEPT.	
REAL ESTATE DEPT.	

CO-SIGN SIGNATURES

CONTRACTOR	
OWNER	

ADAMS JOB NO.	2014.086	
STATUS	DATE	BY
DATE DRAWN	SEPT 2015	EAO
PLAN CHECKED	SEPT 2015	TDH
AS-BUILT		

STORMWATER MANAGEMENT PLAN

C8.0

© Copyright 2015, Adams Engineering

FILE PATH: _Projects\2014\2014.086_McD_Hudson Rd\ - Pasco FL\Drawings\03 - Production\C8.0 STORMWATER MANAGEMENT PLAN

PLOTTER: Adobe PDF

PLOT TIME: 8:33:51 PM

PLOT DATE: Tuesday, September 22, 2015

PLOTTED BY: Edgar Otto

FILENAME: C8.0 STORMWATER MANAGEMENT PLAN.dwg

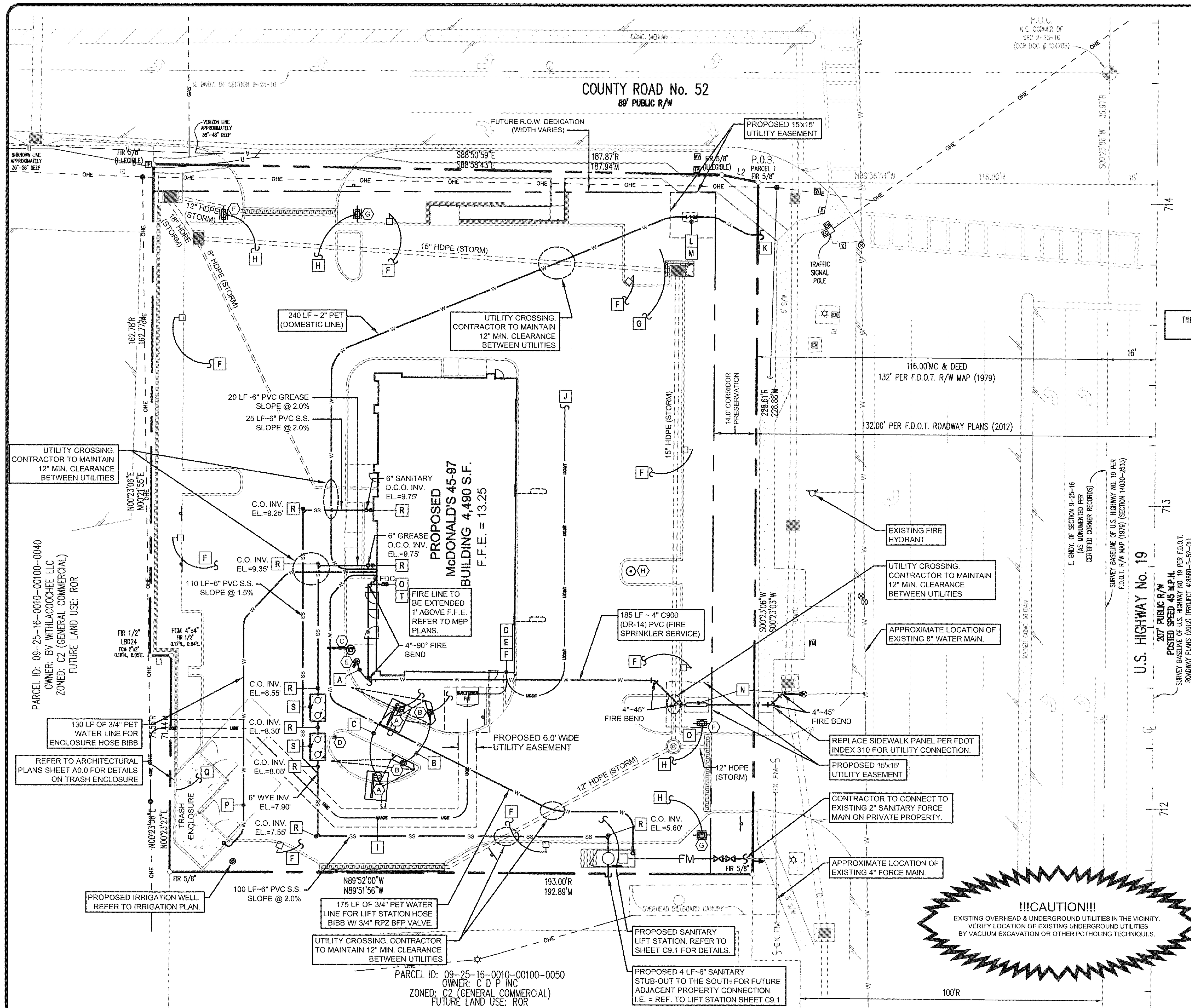

Know what's **below.** **Call** before you dig.

THESE PLANS ARE SUBJECT TO REVIEW & APPROVAL BY JURISDICTIONAL ENTITIES.

GREASE INTERCEPTOR CALCULATION TABLE FLORIDA PLUMBING CODE TABLE 1003.5.1
MINIMUM GREASE INTERCEPTOR SIZE FORMULA = S x GS x HR/12 x LOAD FACTOR
S = NUMBER OF SEATS IN DINING AREA; GS = GALLONS OF WASTE WATER PER SEAT (USE 25 GALLONS FOR ORDINARY RESTAURANTS; USE 10 GALLONS FOR SINGLE SERVICE ARTICLE RESTAURANTS); HR = NUMBER OF HOURS ESTABLISHMENT IS OPEN; LF = LOADING FACTOR (USE 2.00 INTERSTATE HIGHWAY; 1.50 OTHER FREEWAYS; 1.25 RECREATIONAL AREA; 1.00 MAIN HIGHWAY; 0.75 OTHER ROADS)
66 SEATS x 10 GALLONS x 24 HOURS/12 x 1.00 MAIN HIGHWAY MIN. GREASE INTERCEPTOR SIZE = 1,320 GALLONS; USE TWO (2) - 1,000 GALLON INTERCEPTORS IN SERIES

*** UTILITY GENERAL NOTES ***

1. CONTRACTOR TO EXPOSE & VERIFY ALL UTILITY CONNECTION POINTS & AREAS OF POTENTIAL CONFLICTS PRIOR TO MOBILIZATION. CONTRACTOR TO NOTIFY ENGINEER OF RECORD OF ANY UTILITY CONFLICTS DURING INSPECTION POTHOLE.
2. INSTALL COUNTY APPROVED REFLECTORIZED PAVEMENT MARKINGS/ BUTTONS & FIRE DEPARTMENT SIGNAGE AS REQUIRED BY JURISDICTIONAL FIRE DEPARTMENT.
3. ALL UTILITY AND ELECTRICAL/CONDUIT RUNS ARE SCHEMATIC ONLY. LOT LIGHTS ARE TO BE WIRED TO 2 (TWO) OR MORE CIRCUITS IN AN ALTERNATING SEQUENCE.
4. THE CONTRACTOR SHALL VERIFY LOCATION AND FLOWLINE OF EXISTING SANITARY SEWER MAIN TO BE USED, AND SHALL INSTALL SANITARY SEWER LINE AT MINIMUM SLOPES PER GOVERNING AUTHORITY'S DESIGN SPECIFICATIONS.
5. PRIVATE UTILITY CONNECTIONS SHOWN AS SCHEMATIC ONLY. CONTRACTOR TO COORDINATE WITH UTILITY COMPANY PRIOR TO BID.
6. MANHOLES/VALVE BOXES/CLEANOUTS WITHIN PAVEMENT AREAS SHALL HAVE A REINFORCED CONCRETE PAD PER GOVERNING AUTHORITY'S DESIGN SPECIFICATIONS. ALL ASPHALT PAVEMENT SHALL BE REMOVED ALONG NEAT SAW CUT LINES.
7. CONTRACTOR TO ADJUST ALL UTILITY BOXES, COVERS, CLEAN-OUTS, ETC. TO FINISHED GRADE. ADD EXTENSIONS, VALVE EXTENSION RODS, AND/OR MODIFIED TOPS AS NECESSARY.

BENCHMARK DESCRIPTION

THE ELEVATIONS SHOWN HEREON ARE BASED ON THE NORTH AMERICAN VERTICAL DATUM OF 1988 (N.A.V.D. 1988) AS ESTABLISHED FROM N.G.S. BENCHMARK "V 659", HAVING AN ELEVATION OF 9.02 FEET N.A.V.D. 1988. TO CONVERT ELEVATIONS TO THE NATIONAL GEODETIC VERTICAL DATUM OF 1929 (N.G.V.D. 1929), ADD 0.85 FEET.

NOTICE TO CONTRACTORS - UTILITIES

The Contractor is specifically cautioned that the location and/or elevation of any existing utilities as shown on these plans are based on records of the various utility companies, the governing municipality, and where possible, measurements taken in the field. The information provided is not to be relied on as being exact or complete. The Contractor must call the appropriate utility company at least 48 hours before any excavation to request exact field location of utilities. It shall be the responsibility of the Contractor to relocate all existing utilities which conflict with the proposed improvements shown on these plans.

PASCO COUNTY UTILITIES DATA SHEET FOR SIZING WATER METERS

Customer: **McDONALD'S – L/C: 009/2596**

Type of Occupancy: **ASSEMBLY - RESTAURANT**

Property Identification No.: **09-25-16-0010-00100-0030**

Fixture	Fixture Value at 35 psi	x	No. of Fixtures	=	Fixture Value
Bathtub	8	x		=	
Bedpan washer	10	x		=	
Combination Sink & Tray	3	x		=	
Dental Unit	1	x		=	
Dental Lavatory	2	x		=	
Drinking Fountain - Cooler	1	x		=	
Drinking Fountain - Public	2	x		=	
Kitchen Sink - 1/2" connection	3	x	5	=	15
- 3/4" connection	7	x	2	=	14
Lavatory - 3/8" connection	2	x		=	
- 1/2" connection	4	x	4	=	16
Laundry Tray - 1/2" connection	3	x		=	
- 3/4" connection	7	x		=	
Shower head (shower only)	4	x		=	
Service Sink - 1/2" connection	3	x		=	
- 3/4" connection	7	x	2	=	14
Urinal - Pedestal Flush Valve	10	x		=	
- Wall Flush Valve	10	x	1	=	10
- Trough (2 ft. Unit)	2	x		=	
Wash Sink (each set of faucets)	4	x		=	
Water Closet - Flush Valve	10	x	3	=	30
- Tank Type	3	x		=	
Dishwasher - 1/2" connection	5	x	1	=	5
- 3/4" connection	10	x		=	
- 1" connection	25	x		=	
Washing Machine - 1/2" connection	5	x		=	
- 3/4" connection	10	x	1	=	10
- 1" connection	25	x		=	
Hose connection - 1/2"	6	x		=	
- 3/4"	10	x	4	=	40
Hose (50 ft.) - 1/2"	6	x		=	

Page 3 of 7 Pages

- 3/4"	9	x		=	
- 1"	12	x		=	

Combined Fixture Value Total = 154

Customer Peak demand from Curves = 56 gpm

Enter Line Pressure and Pressure Factor

Customer Peak demand from Curves X Pressure factor = gpm

PASCO COUNTY UTILITIES DATA SHEET FOR SIZING WATER METERS

Customer: Date:

Address:

Type of Occupancy:

Property Identification No.

Additional Equipment Peak Usage (gpm)

1. =
2. =
3. =
4. =
5. =
6. =
7. =
8. =
9. =
10. =

Total of Additional Units = gpm

Irrigation Largest Zone or Combination of Zones = gpm

TOTAL OF CUSTOMER USAGE, EQUIPMENT & IRRIGATION = gpm

Notes or Comments:

Page 4 of 7 Pages

FIXTURE COUNT DATA

McDONALD'S SIGN LEGEND

QTY.	MARK	DESCRIPTION
2	A	CUSTOMER ORDER DISPLAY
2	B	OPO-4 MENU BOARD
1	C	SINGLE ARM GATEWAY CLEARANCE SIGN
1	D	"ANY LANE - ANY TIME" SIGN
1	E	OPO-1 PRE-SELL BOARD
2	F	DIRECTIONAL SIGN "WELCOME" / "ENTER"
2	G	DIRECTIONAL SIGN "THANK YOU" / "EXIT"
1	H	FLAG POLE

REFER TO BUILDING ELEVATION FOR BUILDING SIGNAGE. SIGNAGE APPROVAL IS BY A SEPARATE SUBMITTAL AND APPROVAL PROCESS.

UTILITY SCHEDULE

MARK	DESCRIPTION
A	CONTRACTOR TO PROVIDE ELECTRICAL CONDUIT(S) TO PRE-SELL BOARD PER MANUFACTURER'S SPECIFICATIONS.
B	CONTRACTOR TO PROVIDE ELECTRICAL CONDUIT(S) TO MENU BOARD PER MANUFACTURER'S SPECIFICATIONS.
C	CONTRACTOR TO PROVIDE ELECTRICAL CONDUIT(S) TO C.O.D. PER MANUFACTURER'S SPECIFICATIONS.
D	BUILDING'S ELECTRICAL & LIGHTING POINT OF CONNECTION.
E	CONTRACTOR TO PROVIDE AN EMPTY 2" CONDUIT FOR FUTURE VIDEO COAX W/ PULL STRING AND CAP.
F	CONTRACTOR TO PROVIDE ELECTRICAL CONDUIT(S) WITH WIRE FOR SITE LIGHTING PER LIGHTING MANUFACTURER'S SPECS.
G	CONTRACTOR TO PROVIDE CONDUIT(S) WITH WIRE FOR PROPOSED ROAD SIGN PER MANUFACTURER'S SPECIFICATIONS.
H	CONTRACTOR TO PROVIDE CONDUIT(S) WITH WIRE FOR DIRECTIONAL SIGN(S) PER MANUFACTURER'S SPECIFICATIONS.
I	ELECTICAL CONDUIT W/ RED WARNING TAPE & PULL STRING FOR UNDERGROUND ELECTRICAL SERVICE. CONTRACTOR TO COORDINATE WITH WREC PRIOR TO CONSTRUCTION.
J	CONDUIT FOR UNDERGROUND TELEPHONE SERVICE. CONTRACTOR TO COORDINATE WITH VERIZON PRIOR TO SITE CONSTRUCTION.
K	REMOVE EXISTING 2" WATER METER (PCU#4000677700) AND CONNECT TO EXISTING 2" SERVICE LINE. CONTRACTOR TO COORDINATE DOMESTIC CONNECTION WITH PCU.
L	PROPOSED 1.5" DOMESTIC WATER METER BY UTILITY DEPT. CONTRACTOR TO COORDINATE WATER METER WITH PCU.
M	PROPOSED 1.5" RPZ BACKFLOW PREVENTION DEVICE PER PCU DETAIL No.12 BY CONTRACTOR. WILKINS 975XL OR EQUAL.
N	PROPOSED FIRE SERVICE CONNECTION BY CONTRACTOR. CONNECT TO EXISTING 4" STUB-OUT, 4"-45° BENDS, 4"~90° BENDS, 4" REDUCED PRESSURE DETECTOR ASSEMBLY (WILKINS/ZURN MODEL 375DA OR EQUAL). MAINTAIN A MINIMUM 12" CLEARANCE FROM CONCRETE SLAB. REFER TO PCU DETAIL No. 10.
O	FIRE SPRINKLER SYSTEM DESIGNED BY OTHERS. REFER TO FIRE PLAN AND COORDINATE FDC, STORZ CONNECTOR FIXTURES & LOCATION WITH FIRE INSPECTOR & PCU PERSONNEL.
P	3/4" WATER SERVICE TO TRASH ENCLOSURE
Q	CONDUIT WITH WIRE FOR TRASH ENCLOSURE ELECTRICAL SERVICE CONNECTION.
R	SANITARY SEWER CLEANOUT PER PCU SPECIFICATIONS. REFER TO PCU DETAIL No. 45 ON SHEET D2.0 GEN. DETAILS.
S	TWO (2) - 1,000 GALLON GREASE INTERCEPTORS. INSTALL PER MANUFACTURER'S SPECIFICATIONS W/ 24" DIA. "GREASE" MANHOLE COVERS (USF 170-CE RING AND COVER - H20 RATING)
T	PROPOSED STAINLESS STEEL ONE PIECE IN-BUILDING RISER (IBR) BY AMES FIRE & WATERWORKS BY CONTRACTOR.

W.O. 434576

PASCO COUNTY FIRE HYDRANT REPORT

"Flow tests should take place 6am-8am or 5pm-7pm to represent high demand periods"

DATE: 9-15-15 SUBDIVISION: Bayonet Point-Redus TIME: 610

HYDRANT #: 1-50 TRAFFIC MODEL YES [X] NO [ ]

HYDRANT LOCATION WHERE RESIDUAL PSI TAKEN: U.S. 19 @ S.R. 52

ADDRESS: 11929 U.S. 19/S.R. 52

HYDRANT MANUFACTURER: AVK

YEAR & MODEL: 2004 27-50

BARREL SIZE: 4-1/2 [ ] 5-1/4 [X] 6" [ ] NOZZELS: 2-1/2 [2] 4-1/2 [1]

CAPS & CHAINS: YES [X] NO [ ]

TRAFFIC MODEL: YES [X] NO [ ]

HYDRANT HEIGHT TO C/L OF 4-1/2 NOZZELS: 17"

HYDRANT VALVE OPERATONS: YES [X] NO [ ]

HYDRANT SERVICED AND LUBRICATED: YES [X] NO [ ]

PHYSICAL APPEARANCE: GOOD [X] FAIR [ ]

STREET MARKET: YES [X] NO [ ]

DATE PSI GAUGE AND PITOT TUBE WAS LAST CALIBRATED: 9-15-15

FLOW TEST RESULTS:

STATIC: 70 TIME: 1 HR @ PER HOUR

RESIDUAL: 62 MATERIALS: 3oz. Lube / 8oz. Paint

FLOW: 60 1 Street Marker

GPM: 1300 TOTAL COST:

Flow Test Only

COMMENTS: Calculation per Fire Marshal / divided by ___ = ___ X ___ =

INSPECTED BY AND TITLE: E. Rodriguez UW III

REVIEWED BY & TITLE:

PIPE MATERIAL SPECIFICATIONS

SANITARY SEWER PIPE MATERIAL SPECIFICATIONS
ALL SANITARY SEWER PIPE SHALL MEET ASTM D3034, DR-26 & GREEN IN COLOR

WATER PIPE MATERIAL SPECIFICATIONS
3/4" TO 2" - POLYTHYLENE EXTRUSION TUBING (PET) SHALL MEET NSF, PE-3408, DR-9, 200 PSI (COPPER TUBING SIZE) & BE BLUE IN COLOR W/ BLACK LETTERING.

4" - AWWA C900 PVC, CLASS 150, DR-14 (OUTSIDE DIAMETER AS DIP)
OR
4" - ANSI/AWWA C151/A DUCTILE IRON, CLASS 50

ALL WATER LINES MUST BE INSTALLED A MINIMUM OF 36" BELOW FINISH GRADE.

WATER LINES SHALL BE INSTALLED ABOVE SEWER LINES WHEN POSSIBLE.

WATER LINES SHALL HAVE 12" VERTICAL CLEARANCE AT SANITARY SEWER CROSSINGS.

UTILITY CONTACTS

WATER & SEWER:
PASCO COUNTY UTILITIES DEPARTMENT
7536 STATE STREET, SUITE 205
NEW PORT RICHEY, FLORIDA 34654
ATTN: GEORGEANN BENNETT
PHONE: (727) 847-8145

ELECTRIC:
WITHLACHOOCHEE RIVER ELECTRIC COOPERATIVE
12013 HAYS ROAD
SHADY HILLS, FLORIDA 34610
ATTN: JEFF RATLIFF
PHONE: (727) 868-9465 EXT. 2133

TELEPHONE:
VERIZON
1280 CLEVELAND STREET
CLEARWATER, FLORIDA 33755
ATTN: DAN SULLIVAN
PHONE: (727) 562-1190

GAS:
TECO/PEOPLES GAS
1400 CHANNELSIDE DRIVE
TAMPA, FLORIDA 33605
ATTN: KEN MIRACOLA
PHONE: (813) 927-7719

!!!CAUTION!!!
EXISTING OVERHEAD & UNDERGROUND UTILITIES IN THE VICINITY. VERIFY LOCATION OF EXISTING UNDERGROUND UTILITIES BY VACUUM EXCAVATION OR OTHER POTHOLING TECHNIQUES.

REV	DATE	DESCRIPTION	BY	ISSUE REF
---	---	---	---	---
---	---	---	---	---
---	---	---	---	---
---	---	---	---	---

Adams
27524 Cashford Circle, Suite 101 ■ Wesley Chapel, Florida 33544 ■ (813) 929-7499

TIM D. HODES LICENSE 9-22-15 No 67017 STATE OF FLORIDA PROFESSIONAL ENGINEER

Certificate Of Authorization: #27614

OFFICE: FLORIDA REGION
ADDRESS: KROC DRIVE - OAK BROOK, ILLINOIS 60521
MCDONALD'S L/C: 009-2596

McDonald's USA, LLC

These drawings and specifications are the confidential and proprietary property of McDonald's USA, LLC and shall not be copied or reproduced without written authorization. The contract documents were prepared for use on this specific site in conjunction with its issue date and are not suitable for use on a different site or at a later time. Use of these drawings for reference or example on another project requires the services of properly licensed architects and engineers. Reproduction of the contract documents for reuse on another project is not authorized.

11929 US HIGHWAY 19
PORT RICHEY, FLORIDA

PLAN APPROVALS	SIGNATURE (2 REQUIRED)	DATE
REGIONAL MGR.		
CONST. MGR.		
OPERATIONS DEPT.		
REAL ESTATE DEPT.		
CO-SIGN SIGNATURES		
CONTRACTOR		
OWNER		

ADAMS JOB NO.	2014.086	
STATUS	DATE	BY
DATE DRAWN	SEPT 2015	EAO
PLAN CHECKED	SEPT 2015	TDH
AS-BUILT		

UTILITY PLAN

C9.0

© Copyright 2015, Adams Engineering

FULL PATH: I:_Projects\2014\2014.086_McD_Hudson Relo - Pasco FL\Drawings\03 - Production\C9.0 UTILITY PLAN
PLOTTER: PDF-XChange For AcroPlot Pro
PLOT TIME: 6:24:28 PM
PLOT DATE: Tuesday, September 22, 2015
PLOTTED BY: Edgar Ortiz
FILENAME: C9.0 UTILITY PLAN.dwg

FULL PATH: I:_Projects\2014\2014.086_McD_Hudson Relo - Pasco FL\Drawings\03 - Production\C9.1 LIFT STATION PLAN
PLOTTER: Adobe PDF
PLOT TIME: 6:22:32 PM
PLOT DATE: Tuesday, September 22, 2015
PLOTTED BY: Edgar Ortiz
FILENAME: C9.1 LIFT STATION PLAN.dwg

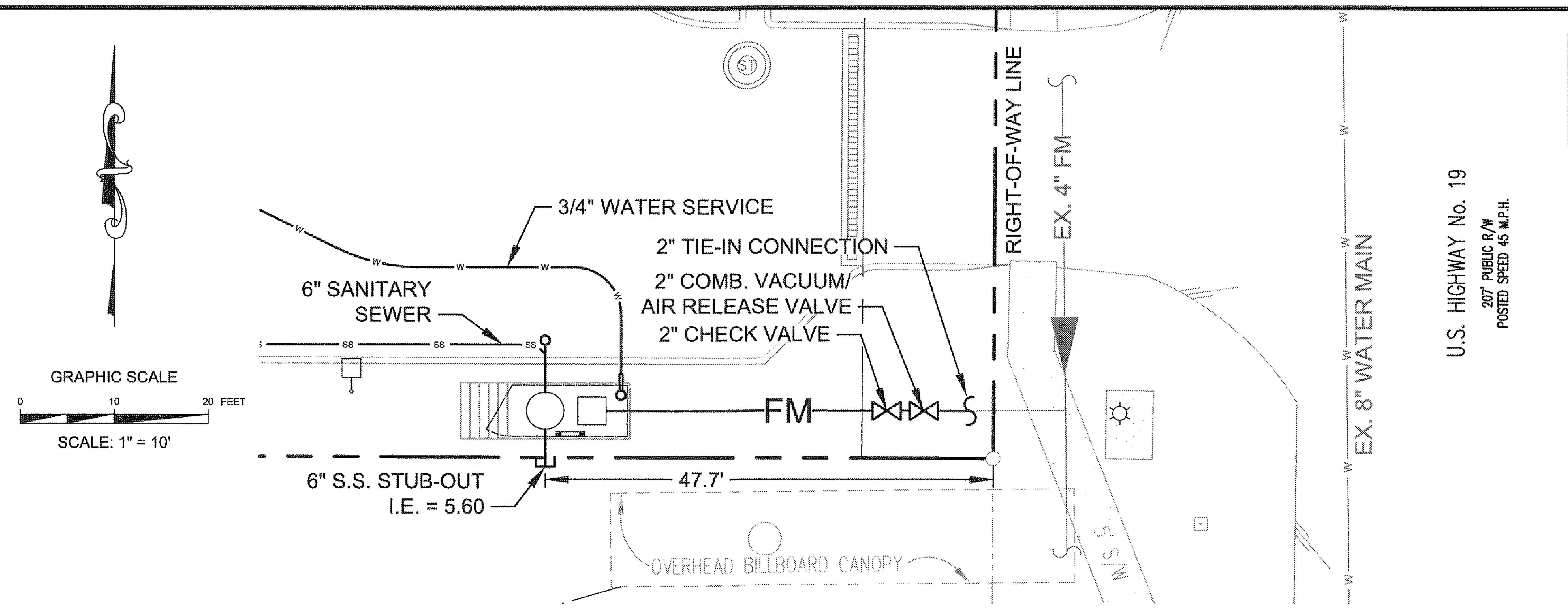

LIFT STATION WILL BE PRIVATELY OWNED AND MAINTAINED

811 Know what's below. Call before you dig.

THESE PLANS ARE SUBJECT TO REVIEW & APPROVAL BY JURISDICTIONAL ENTITIES.

WET WELL/VALVE BOX LAYOUT

PLAN VIEW

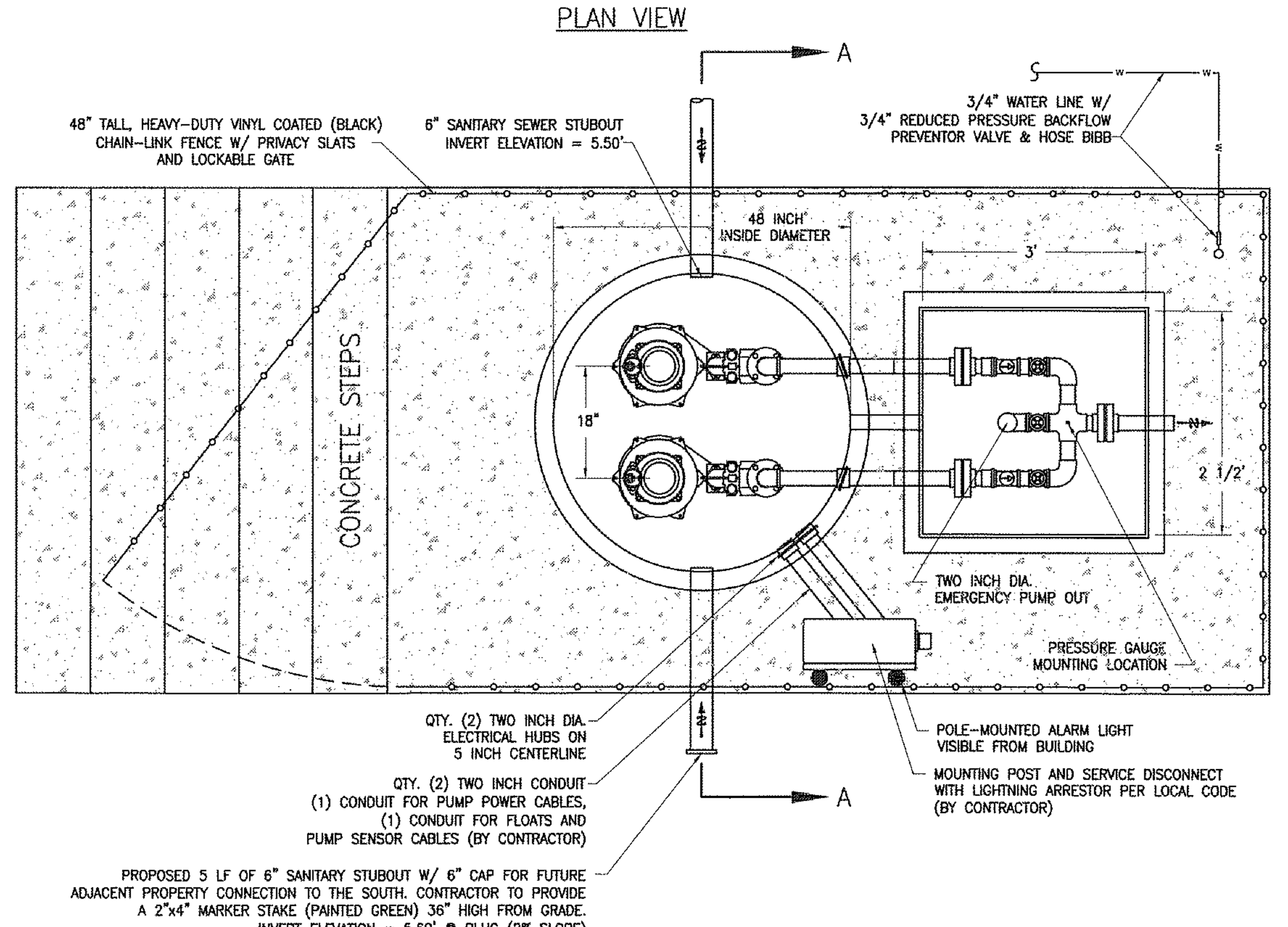

SECTION VIEW

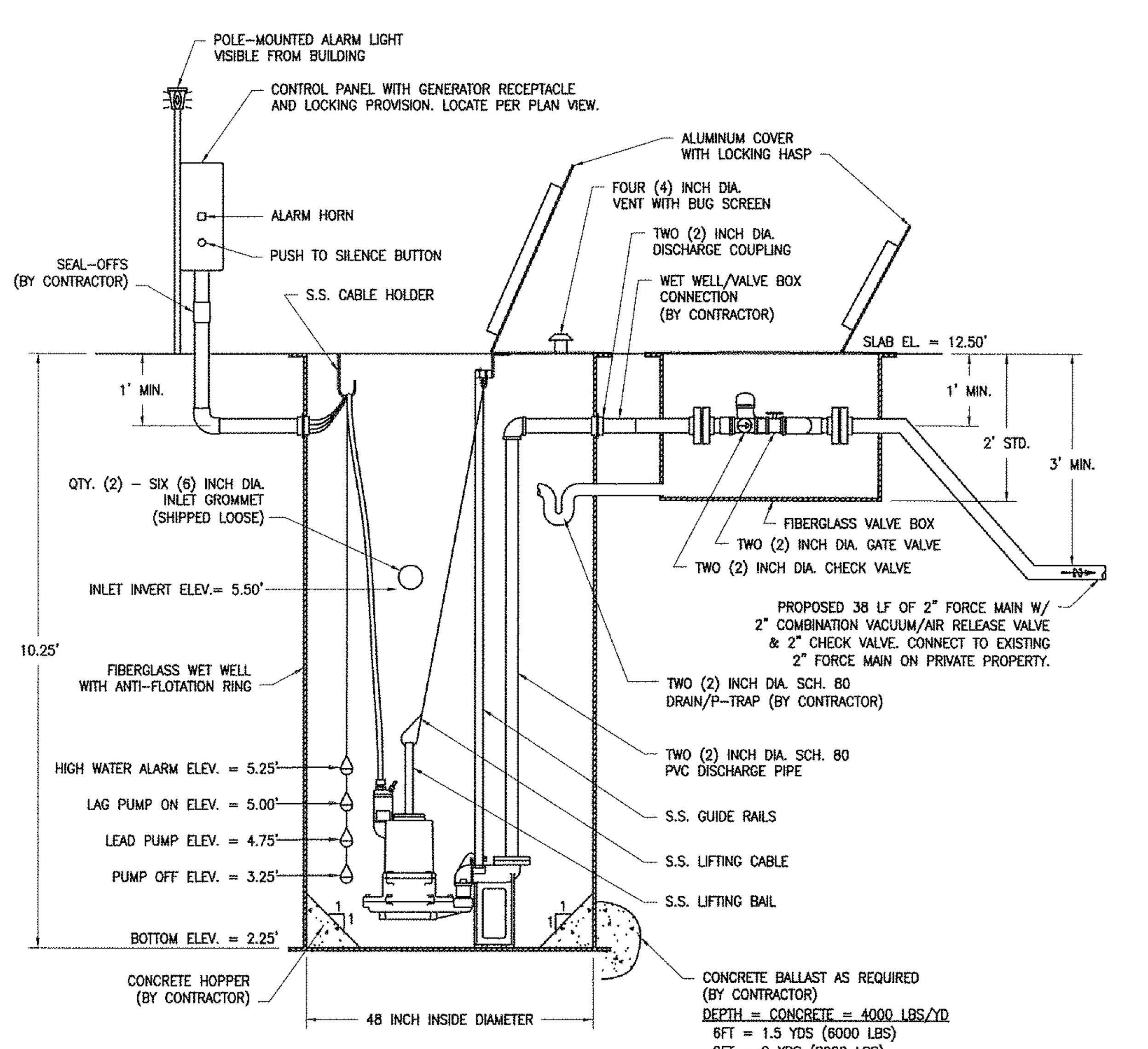

FDEP REQUIREMENTS
PROVIDE CONCRETE HOPPER WITH 1:1 SLOPE.
PROVIDE 3/4" WATER LINE WITH A 3/4" RPZ.
ALL ELECTRICAL PANELS SHALL BE ABOVE THE 100 YEAR FLOOD ELEVATION.

GENERAL NOTES

DESIGN CONDITIONS
PUMPS SHALL BE OF THE SUBMERSIBLE TYPE. EACH PUMP SHALL BE MOUNTED ON A Ø2" RAIL SYSTEM. THE RAIL SYSTEM SHALL BE SELF ENGAGING RESULTING IN A LEAKPROOF COUPLING. THE RAIL SYSTEM SHALL INCLUDE THE BASE ELBOW, DISCHARGE FLANGE ASSEMBLY, Ø1" 304SS GUIDE RAILS, 316SS UPPER GUIDE BRACKET, 316SS LIFTING BAIL AND CABLE, AND A SIX-HOOK 316SS CABLE HOLDER. THE RAIL SYSTEM SHALL BE MOUNTED AND PRE-PIPED BY THE PUMP SUPPLIER.

PUMP CONSTRUCTION
THE PUMP VOLUTE, MOTOR AND SEAL HOUSING SHALL BE CONSTRUCTED OF CAST IRON, ASTM A-48. ALL EXTERNAL FASTENERS SHALL BE SERIES 300 STAINLESS STEEL. THE PUMP SHAFT SHALL BE CONSTRUCTED OF SERIES 416 STAINLESS STEEL.

IMPELLER
THE IMPELLER SHALL BE OF MULTI-VANE, SEMI-OPEN BRONZE CONSTRUCTION. THE IMPELLER SHALL INCLUDE PUMP-OUT VANES ON THE BACK OF THE IMPELLER AND SHALL BE STATICALLY AND HYDRAULICALLY BALANCED.

CUTTERS
A TWO-STAGE CUTTER ASSEMBLY SHALL BE MOUNTED ON THE SUCTION SIDE OF THE PUMP WITH DIRECT DISCHARGE INTO THE PUMP IMPELLER. THE GRINDER SHALL BE CAPABLE OF GRINDING ALL MATERIALS FOUND IN NORMAL, DOMESTIC SEWAGE, INCLUDING PLASTICS, RUBBER, SANITARY NAPKINS, DISPOSABLE DIAPERS AND WOOD PARTICLES, INTO A FINE SLURRY. BOTH THE STATIONARY AND ROTATING CUTTERS SHALL BE CONSTRUCTED OF HARDENED 440C STAINLESS STEEL.

MOTOR
THE MOTOR SHALL BE MOUNTED IN A SEALED, SUBMERSIBLE TYPE HOUSING. THE STATOR SHALL BE SECURELY HELD IN PLACE WITH A REMOVABLE END RING AND THREADED FASTENERS FOR EASE OF REMOVAL WITHOUT THE USE OF HEAT OR A PRESS. THE MOTOR WILL HAVE TWO HEAVY-DUTY BALL BEARINGS; ONE UPPER (RADIAL) AND ONE LOWER (THRUST), TO SUPPORT THE SHAFT. THE MOTOR SHALL BE EQUIPPED WITH A WINDING THERMOSTAT THAT AUTOMATICALLY SHUTS THE MOTOR OFF IN CASE OF MOTOR OVERHEATING.

SEAL CHAMBER
THE PUMP SHALL HAVE TWO MECHANICAL SEALS, MOUNTED IN TANDEM WITH AN OIL CHAMBER BETWEEN THE SEALS. THE PUMP SHALL BE EQUIPPED WITH A SEAL LEAK DETECTION PROBE AND WARNING SYSTEM BY USING A SEAL FAILURE SENSOR INSTALLED IN THE SEAL CHAMBER.

WET WELL
THE PUMP SUPPLIER SHALL PROVIDE THE FIBERGLASS WET WELL. THIS GLASS FIBER-REINFORCED POLYESTER BASIN SHALL BE CONSTRUCTED OF A COMMERCIAL GRADE OF GLASS FIBER AND SHALL BE PROVIDED WITH AN ANTI-FLOTATION RING WITH A MINIMUM DIAMETER OF THREE INCHES LARGER THAN THE BASIN DIAMETER. THE RAIL SYSTEM, INTERNAL PIPING AND DISCHARGE CONNECTIONS SHALL BE PRE-INSTALLED BY THE PUMP SUPPLIER.

HATCH COVER
THE HATCH COVER SHALL BE 2/3 HINGED TO ALLOW FOR MAXIMUM ACCESS TO THE WET WELL. THE HATCH COVER SHALL BE ALUMINUM WITH STAINLESS STEEL FASTENERS, RATED FOR 150 PSF OR GREATER. THE HATCH COVER SHALL INCLUDE A SINGLE OR DUAL DOOR OF DIMENSIONS SPECIFIED BY THE PUMP MANUFACTURER FOR PROPER PUMP CLEARANCE. THE COVER SHALL BE MANUFACTURED BY US FABRICATION, OR EQUAL.

VALVE BOX
THE VALVE BOX IS FIBERGLASS WITH ALUMINUM LOCKABLE COVER. STANDARD SIZE VALVE BOX IS 3' X 2 1/2' X 2'.

VALVES
VALVES SHALL BE SEWAGE SWING CHECK WITH CLEAN-OUT PORTS AND BRASS GATE VALVES.

FLOATS
FLOATS SHALL BE ANCHOR SCIENTIFIC ROTO-FLOATS OR EQUAL.

CONTROLS
THE CONTROL PANEL SHALL BE UL508 LISTED. A NEMA 3R OR 4X ENCLOSURE SHALL BE PROVIDED. THE PANEL SHALL INCLUDE AN ALTERNATING CONTROL SCHEME (DUPLEX AND ABOVE), MAIN CIRCUIT BREAKER, GENERATOR RECEPTACLE, HIGH LEVEL ALARM LIGHT AND HORN, ELAPSED TIME METERS, VOLTAGE OR PHASE MONITOR, SEAL FAILURE AND OVERLOAD SENSORS. THE LIGHTNING ARRESTOR SHALL BE SHIPPED LOOSE FOR FIELD INSTALLATION.

SUPPLIER
PUMP SUPPLIER SHALL PROVIDE SUBMERSIBLE PUMPS, SLIDE RAIL ASSEMBLIES, CONTROL PANEL, FLOAT SWITCHES, ALUMINUM HATCHES AND ACCESSORIES TO INSURE PROPER OPERATIONS AND WARRANTY. THE COMPLETE PACKAGE PUMPING STATION SHALL HAVE PUMP BASES, RAIL ASSEMBLIES, AND DISCHARGE PIPING ASSEMBLED BY BARNEY'S PUMPS INC. READY FOR FIELD INSTALLATION.

PUMP PACKAGE SHALL BE SUPPLIED BY BARNEY'S PUMPS IN LAKELAND (863-665-8500), CORAL SPRINGS (954-346-0669), OR JACKSONVILLE (904-260-0669), FL.

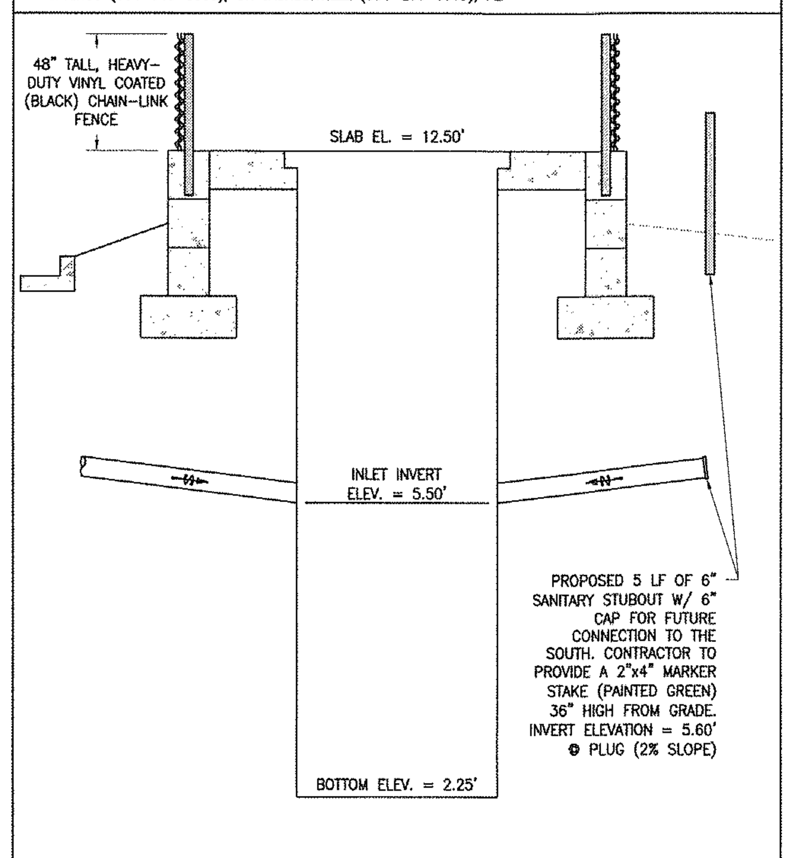

SECTION A–A

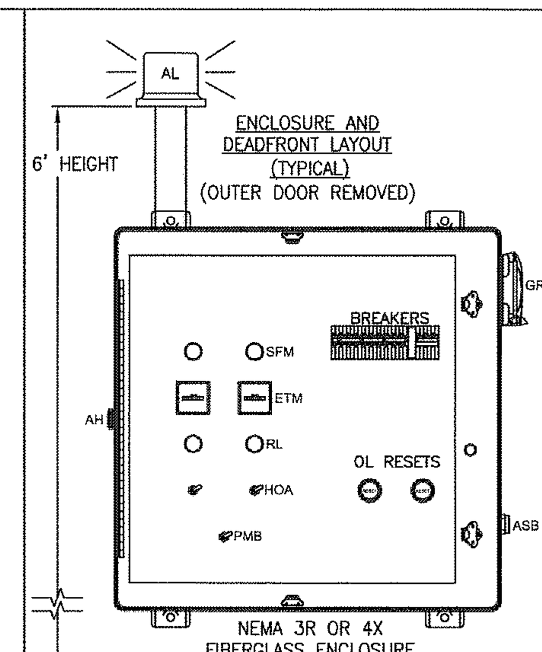

BASE PLATE LAYOUT (TYPICAL)

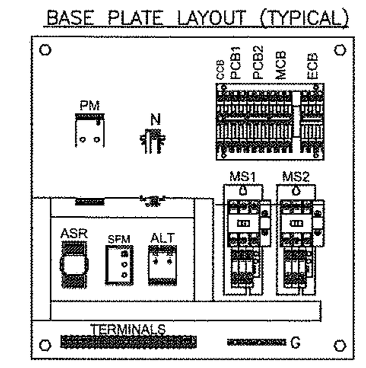

TERMINAL STRIP

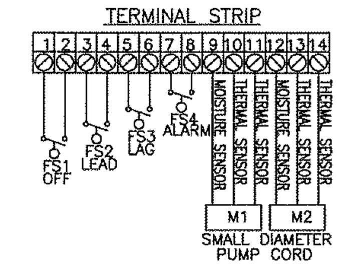

LEGEND

ENC	ENCLOSURE
MCB	MAIN CIRCUIT BREAKER
ECB	EMERGENCY CIRCUIT BREAKER
PCB1,2	PUMP CIRCUIT BREAKER
CCB	CONTROL CIRCUIT BREAKER
MS1,2	MOTOR STARTER
OL	OVERLOAD HEATER
GR	GENERATOR RECEPTACLE
VM	VOLT MONITOR
ETM	ELAPSED TIME METER
ALT	ALTERNATOR
AH	ALARM HORN
AL	ALARM LIGHT
ASB	ALARM SILENCE BUTTON
HOA	HAND OFF AUTO SWITCH
VMB	VOLT MONITOR BYPASS
RL	RUN LIGHT
IL	INDICATING LIGHT
SFM	SEAL FAIL MODULE
ASR	ALARM SILENCE RELAY
	RUN CAPACITOR
	START CAPACITOR
	START RELAY
PM	PHASE MONITOR
PMB	PHASE MONITOR BYPASS

ALL PANELS SHALL CONFORM TO FLORIDA DEP 17-604.400
1) GENERATOR RECEPTACLE WITH INTERLOCK FOR EMERGENCY POWER CONNECTION.
2) SURGE AND LIGHTNING PROTECTION SHALL BE PROVIDED BY CONTRACTOR AND MOUNTED EXTERNAL TO THE CONTROL PANEL.
3) PHASE OR VOLTAGE MONITOR SHALL BE PROVIDED IN CONTROL PANEL.
4) ALL PANELS, WET WELL, VALVE BOX, AND ACCESS DOORS SHALL HAVE LOCKABLE MECHANISMS. CONTRACTOR TO PROVIDE KEYED LOCKS.
5) POST UNOBSTRUCTED SIGN MADE OF DURABLE WEATHER RESISTANT MATERIAL WITH THE FOLLOWING: PUBLIC NOTICE: IN CASE OF EMERGENCY CONTACT:
6) THE CONTROL PANEL SHALL BE SUITABLY INSTALLED TO PREVENT SETTLING OR TIPPING.
7) ELECTRICAL CONTRACTOR TO PROVIDE SERVICE DISCONNECT WITH LIGHTNING ARRESTOR MOUNTED PER LOCAL CODES.
8) FLOAT SWITCHES SHALL BE UL LISTED.

ELECTRICAL

INCOMING POWER: _____V _____ø
(CONTRACTOR TO VERIFY)

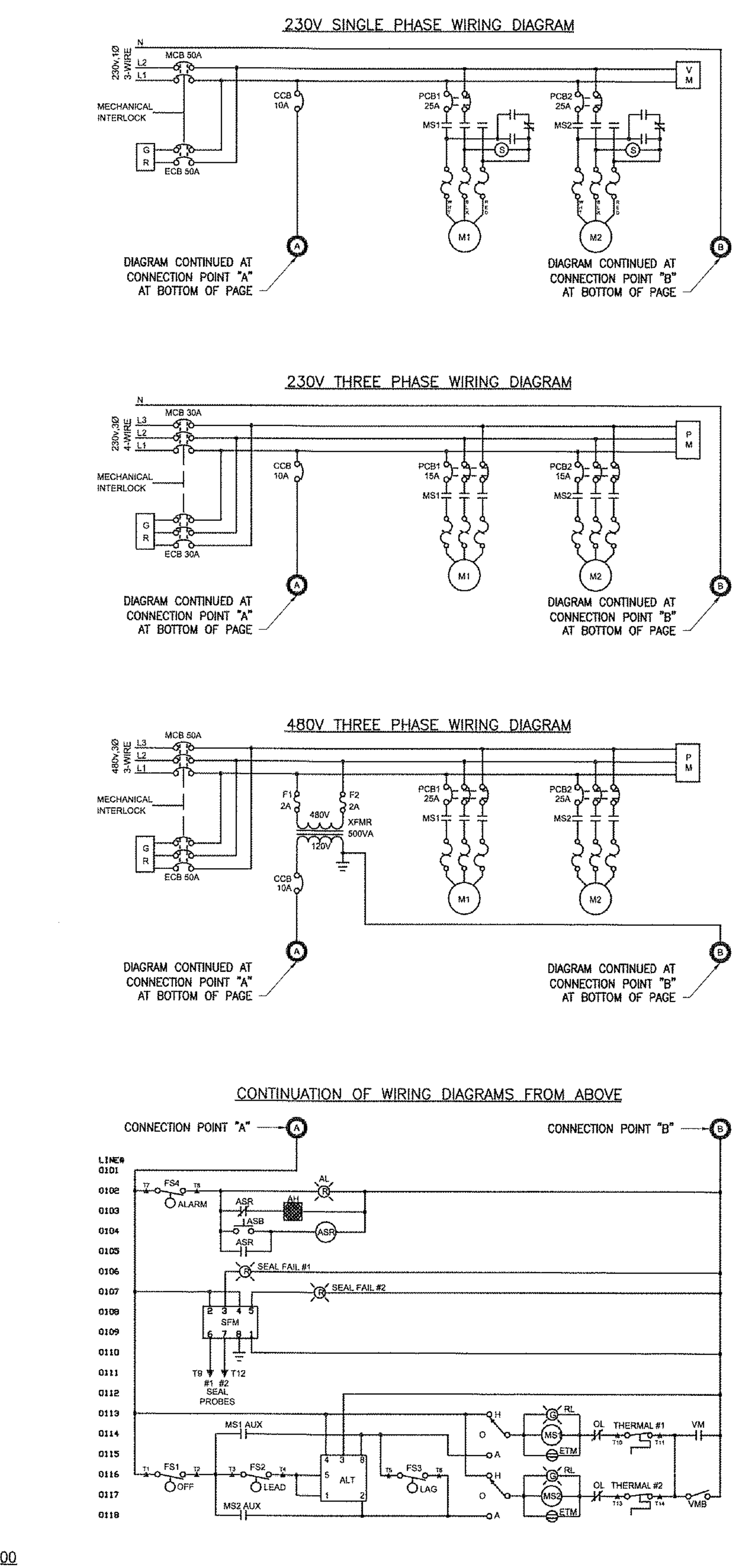

PANEL MANUFACTURER SHALL BE UL 508 AND UL 698A LISTED.

UL LISTED ENCLOSED INDUSTRIAL CONTROL PANEL

BARNEY'S PUMPS, INC.			
3907 HWY 98 SOUTH,LAKELAND,FL 33813 PHONE: (863) 665-8500			
PO BOX 3529-33802,LAKELAND,FL 33802 FAX: (863) 666-3858			
TITLE/PROJECT: WW LIFT STATION MULTI-SPEC SHEET			
CUSTOMER: -			
SALESPERSON: -		DWG. #: WWMULTI	REV.: A
DWG. BY: S. TOWLES	DATE: 09/09/2005	PAGE: 1 OF 1	

PUMP DATA	
PRIMARY PUMP CAPACITY	15 GPM
PRIMARY TDH	40' TDH
PUMP MANUFACTURER	Hydromatic
PUMP MODEL #	HPG200
R.P.M.	3450
HORSEPOWER	2.0
IMPELLER DIAMETER	3.75"
ELECTRICAL VOLTS/PHASE	230V/1Ø
FULL LOAD AMPS PER PUMP	20
PUMP DISCHARGE SIZE	2"

ELEVATIONS	
TOP OF WETWELL	12.50'
INLET INVERT	5.50'
HIGH WATER ALARM (HWA)	5.25'
2nd PUMP ON (LAG)	5.00'
1st PUMP ON (LEAD)	4.75'
PUMP OFF (OFF)	3.25'
BOTTOM OF WETWELL	2.25'
WETWELL DIAMETER	48"

Section GRINDER Page 102

Performance Curve – HPG200
RPM: 3450 DISCHARGE: 1-1/4"

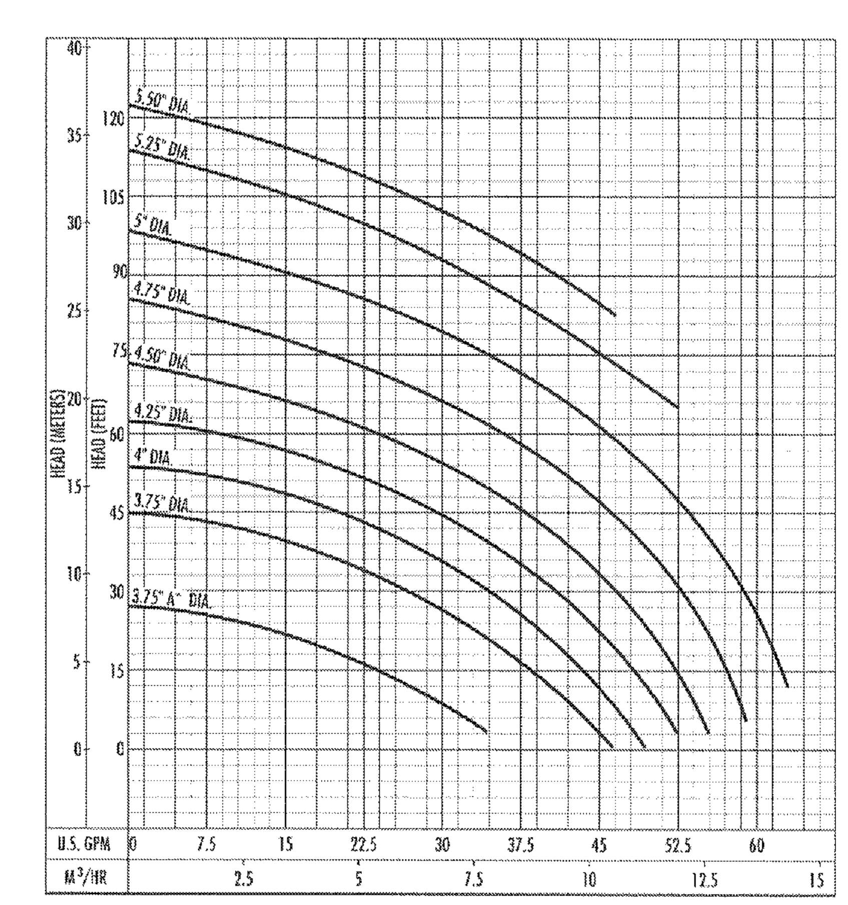

The curves reflect maximum performance characteristics without exceeding full load (Nameplate) horsepower. All pumps have a service factor of 1.2. Operation is recommended in the bounded area with operational point within the curve limit. Performance curves are based on actual tests with clear water at 70° F. and 1280 feet site elevation.

PENTAIR HYDROMATIC Conditions of Service: GPM: 15 TDH: 40' October © 2014 Pentair, Inc.

REV	DATE	DESCRIPTION	BY	ISSUE REF
---	---	---	---	---
---	---	---	---	---
---	---	---	---	---
---	---	---	---	---

Adams
27524 Cashford Circle, Suite 101 ■ Wesley Chapel, Florida 33544 ■ (813) 929-7499

TIM D. HODES LICENSE No 67017 9-22-15 STATE OF FLORIDA PROFESSIONAL ENGINEER
Certificate Of Authorization: #27614

OFFICE: FLORIDA REGION
ADDRESS: KROC DRIVE - OAK BROOK, ILLINOIS 60521
MCDONALD'S L/C: 009-2596

McDonald's USA, LLC

These drawings and specifications are the confidential and proprietary property of McDonald's USA, LLC and shall not be copied or reproduced without written authorization. The contract documents were prepared for use on this specific site in conjunction with its issue date and are not suitable for use on a different site or at a later time. Use of these drawings for reference or example on another project requires the services of properly licensed architects and engineers. Reproduction of the contract documents for reuse on another project is not authorized.

11929 US HIGHWAY 19
PORT RICHEY,FLORIDA

PLAN APPROVALS	SIGNATURE (2 REQUIRED)	DATE
REGIONAL MGR.		
CONST. MGR.		
OPERATIONS DEPT.		
REAL ESTATE DEPT.		
CO-SIGN SIGNATURES		
CONTRACTOR		
OWNER		

ADAMS JOB NO.	2014.086	
STATUS	DATE	BY
DATE DRAWN	SEPT 2015	EAO
PLAN CHECKED	SEPT 2015	TDH
AS-BUILT		

LIFT STATION PLAN

C9.1

© Copyright 2015, Adams Engineering

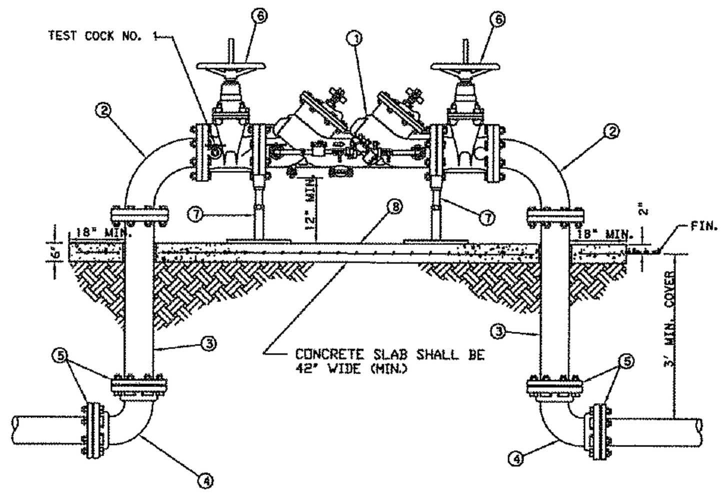

ITEM	QUANT.	DESCRIPTION
1	1	3", 4", 6", 8" DOUBLE CHECK VALVE/BFP ASSEMBLY WITH DETECTOR ASSEMBLY
2	2	3", 4", 6", 8" BEND, 90°, FLANGE x FLANGE
3	2	3", 4", 6", 8" SPOOL PIECE FLG. x PE. D.I.P.
4	2	3", 4", 6", 8" BEND, 90°, M.J. x M.J.
5	4	3", 4", 6", 8" GLAND, RETAINER M.J. (MEGALUG)
6	2	3", 4", 6", 8" VALVE, GATE FLG. x FLG. RESILIENT WEDGE O.S. & Y.
7	2	SUPPORT (AS NEEDED)
8	1	CONCRETE SLAB (6" THICK - 42" WIDE MIN.)

NOTE:
- NO TIE RODS OR EYE BOLT RETAINERS PERMITTED ABOVE GROUND.
- B.F.P. ASSEMBLY TO BE INSTALLED LEVEL & PLUMB.
- MINIMUM CLEARANCE OF 36" TO BE MAINTAINED AROUND ENTIRE DEVICE FOR TESTING
- ENTIRE ASSEMBLY TO BE PAINTED SAFETY BLUE.
- DETECTOR BY-PASS ASSEMBLY TO BE FACTORY INSTALLED AND CERTIFIED
- ALL MECHANICAL JOINTS SHALL BE RESTRAINED WITH MEGALUGS OR APPROVED EQUAL
- BELL JOINT RESTRAINERS SHALL BE PROVIDED ON ALL UNDERGROUND PIPING AS SPECIFIED IN JOINT RESTRAINT TABLE DETAIL
- ALL ABOVE GROUND PIPING SHALL BE FLANGED DUCTILE IRON PIPE (NO GALVANIZED OR PVC)
- ITEM 3 SHALL BE FIELD CUT TO PROPER LENGTH TO ACHIEVE DESIGNATGED GROUND CLEARANCE
- IF SO SPECIFIED, ENTIRE ASSEMBLY TO BE ENCLOSED IN 6' CHAIN LINK FENCE.
- BFP DEVICE MUST BE LISTED WITH THE UNIVERSITY OF SOUTHERN CALIFORNIA FOUNDATION FOR CROSS CONNECTION CONTORL AND HYDRAULIC RESEARCH.

CREATED 02/24/03 REVISED

DOUBLE DETECTOR CHECK VALVE ASSEMBLY/BACKFLOW PREVENTER (SINGLE SERVICE: 3", 4", 6", 8", 10")

PROVIDED FOR INFORMATIONAL PURPOSES ONLY. NO MODIFICATIONS WITHOUT WRITTEN PCU APPROVAL

PASCO COUNTY UTILITIES — DETAIL 10

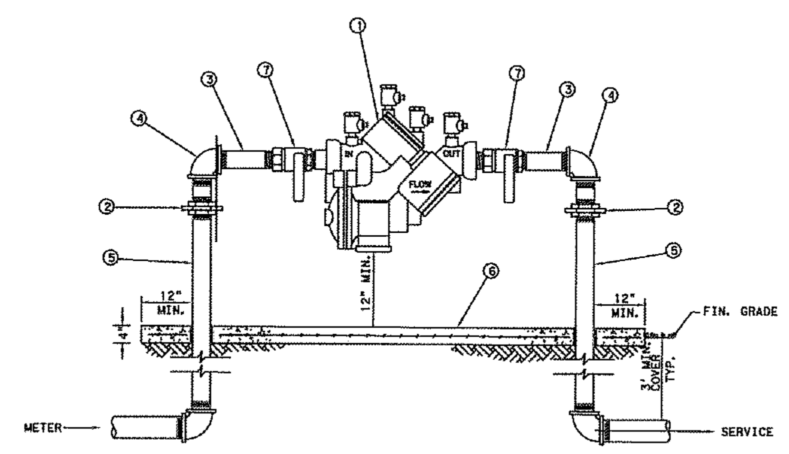

ITEM	QUANT.	DESCRIPTION
1	1	BACKFLOW PREVENTER ASSEMBLY, REDUCED PRESSURE ZONE
2	2	UNIONS - GALV.
3	2	NIPPLES - BRASS
4	2	ELBOWS - GALV. 90°
5	2	RISER - GALV.
6	*	CONCRETE SLAB
7	2	BALL VALVES - BRASS OR S.S. (PROVIDED WITH BFP ASS'Y)

NOTE:
- FIELD ADJUST AND CUT ITEM 5 TO THE PROPER LENGTH.
- MINIMUM CLEARANCE OF 24" TO BE MAINTAINED AROUND DEVICE FOR TESTING.
- ENTIRE ASSEMBLY TO BE PAINTED SAFETY BLUE.
- CONCRETE SLAB TO EXTEND 12" MIN. AROUND ENTIRE DEVICE.
- DEVICE MUST BE LISTED WITH THE UNIVERSITY OF SOUTHERN CALIFORNIA FOUNDATION FOR CROSS CONNECTION CONTROL AND HYDRAULIC RESEARCH.

CREATED 02/24/03 REVISED

REDUCED PRESSURE BACKFLOW PREVENTER (SINGLE SERVICE: 3/4", 1", 1-1/2", 2")

PROVIDED FOR INFORMATIONAL PURPOSES ONLY. NO MODIFICATIONS WITHOUT WRITTEN PCU APPROVAL

PASCO COUNTY UTILITIES — DETAIL 12

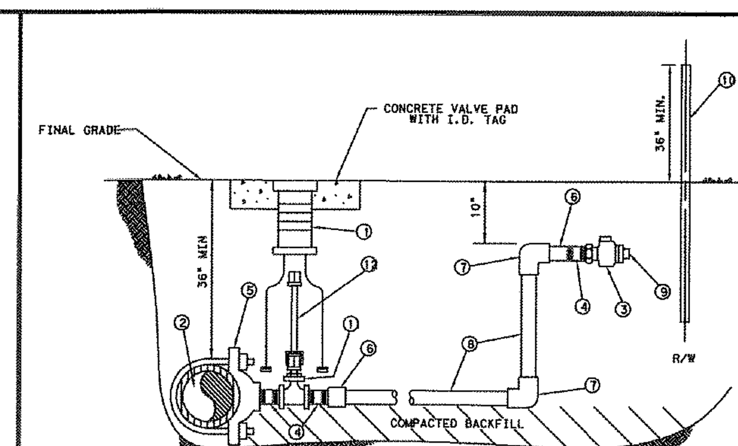

ITEM	QUANT.	DESCRIPTION
1	1	BOX, VALVE CAST IRON SLIP TYPE
2	*	4" & LARGER PIPE, PVC (DR-18) OR D.I.P. (CLASS 50)
3	2	1 1/2", 2" CURB STOP BALL VALVE W/ LOCK WINGS (FIP x FIP OR FIP x CTS)
4	3	1 1/2", 2" NIPPLE, BRASS OR STAINLESS STEEL
5	1	1 1/2", 2" SADDLE, SERVICE (I.P. THREADS)
6	2	1 1/2", 2" ADAPTER (PVC SCH 40 / SLIP x FPT OR BRASS MIP x CTS)
7	2	1 1/2", 2" 90° ELBOW (SLIP x SLIP) SCH 40 (NOT REQUIRED FOR HDPE)
8	*	1 1/2", 2" PIPE, PVC (SCH 40) OR HDPE (3408) - LENGTH VARIES
9	1	1 1/2", 2" PLUG, THREADED (W/ TEFLON TAPE)
10	1	2" x 4" P.T. MARKER STAKE
11	1	2" GATE VALVE, IRON BODY W/ SQUARE NUT
12	1	VALVE EXTENSION ROD, AS REQUIRED (3' MAX. BELOW GRADE)

NOTE:
- A VALVE BOX SHALL BE REQUIRED ON ALL GATE VALVES.
- SERVICE SADDLES SHALL BE INSTALLED ON ALL TAPS TO P.V.C. (DR-18) WATER MAINS.
- 2" GATE VALVE TO BE RESILIENT WEDGE IRON BODY TYPE WITH 2" OPERATING UNIT.
- SADDLES 4" AND LARGER TO BE DUCTILE IRON DUAL STRAP TYPE.
- 1 1/2" BRASS REDUCER BUSHING REQUIRED WITH ITEM NO. 11 FOR 1 1/2" SERVICE.
- MARKER STAKES PAINTED SAFETY BLUE FOR WATER, PURPLE FOR REUSE.
- 4" DIAMETER CASING REQUIRED FOR ROAD CROSSINGS

CREATED 02/24/03 REVISED

WATER AND REUSE LATERAL SERVICE 1 1/2" OR 2" SERVICE LATERAL PVC (SCHEDULE 40)

PROVIDED FOR INFORMATIONAL PURPOSES ONLY. NO MODIFICATIONS WITHOUT WRITTEN PCU APPROVAL

PASCO COUNTY UTILITIES — DETAIL 21

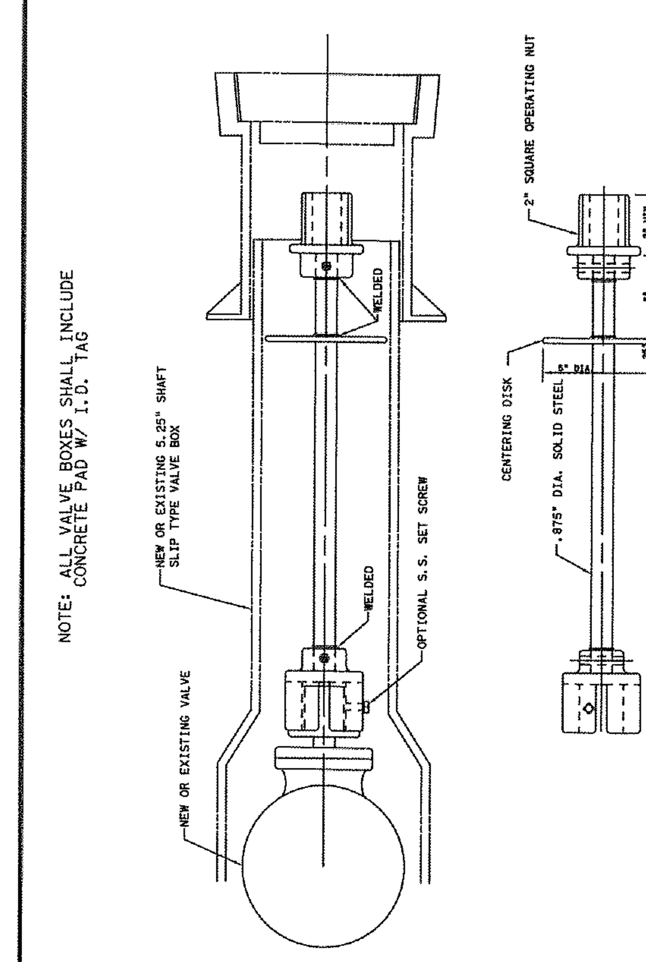

CREATED 02/24/03 REVISED

VALVE EXTENSION RODS

PROVIDED FOR INFORMATIONAL PURPOSES ONLY. NO MODIFICATIONS WITHOUT WRITTEN PCU APPROVAL

PASCO COUNTY UTILITIES — DETAIL 29

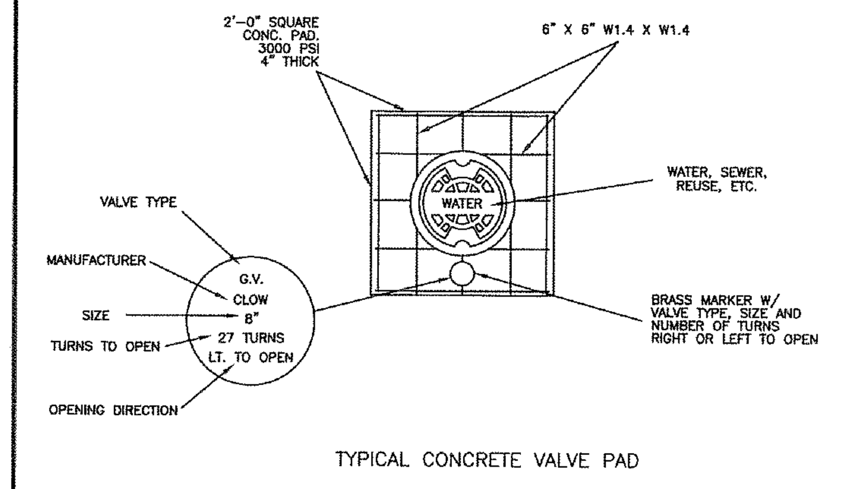

TYPICAL CONCRETE VALVE PAD

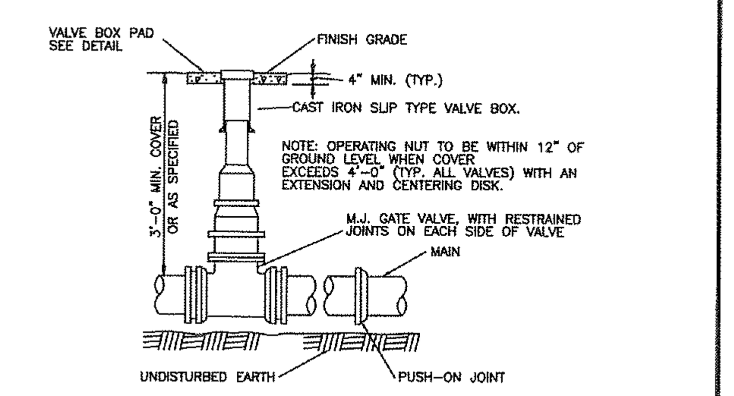

CREATED 02/24/03 REVISED

VALVE BOX DETAIL SLIP TYPE

PROVIDED FOR INFORMATIONAL PURPOSES ONLY. NO MODIFICATIONS WITHOUT WRITTEN PCU APPROVAL

PASCO COUNTY UTILITIES — DETAIL 30

PIPE RESTRAINT LENGTHS IN FEET COMMON FITTINGS

WATER MAINS - TEST PRESSURE 150 PSI

PIPE SIZE	11-1/4°	22-1/2°	45°	90°	DEAD END
4"	2'	4'	8'	20'	45'
6"	3'	6'	12'	28'	63'
8"	4'	7'	15'	36'	82'
10"	4'	9'	18'	43'	98'
12"	5'	10'	21'	50'	116'
16"	6'	13'	26'	63'	148'
20"	7'	15'	31'	76'	179'
24"	9'	17'	36'	87'	208'

FORCE MAINS - TEST PRESSURE 100 PSI

PIPE SIZE	11-1/4°	22-1/2°	45°	90°	DEAD END
4"	1'	3'	6'	13'	30'
6"	2'	4'	8'	19'	42'
8"	2'	5'	10'	24'	55'
10"	3'	6'	12'	29'	66'
12"	3'	7'	14'	34'	77'
16"	4'	8'	18'	42'	99'
20"	5'	10'	21'	50'	119'
24"	6'	11'	24'	58'	139'

(FITTING TYPE across columns.)

RESTRAINT LENGTHS ARE MEASURED FROM THE CENTER LINE OF THE FITTING ALONG THE PIPE IN BOTH DIRECTIONS (EXCEPT DEAD ENDS).

CREATED 02/24/03 REVISED

RESTRAINED JOINT TABLE COMMON FITTINGS

PROVIDED FOR INFORMATIONAL PURPOSES ONLY. NO MODIFICATIONS WITHOUT WRITTEN PCU APPROVAL

PASCO COUNTY UTILITIES — DETAIL 31

PIPE RESTRAINT LENGTHS IN FEET TEES (BRANCH SIDE)

WATER MAINS - TEST PRESSURE 150 PSI

RUN SIZE \ BRANCH SIZE	3"	4"	6"	8"	10"	12"	16"	20"	24"
3"	6'	14'	30'	—	—	—	—	—	—
4"	2'	11'	28'	44'	—	—	—	—	—
6"	1'	2'	22'	40'	52'	—	—	—	—
8"	1'	1'	16'	35'	48'	62'	—	—	—
10"	1'	1'	10'	30'	44'	58'	83'	—	—
12"	1'	1'	3'	25'	40'	55'	80'	103'	—
16"	1'	1'	1'	14'	31'	48'	75'	98'	119'
20"	1'	1'	1'	2'	22'	40'	69'	94'	116'
24"	1'	1'	1'	1'	11'	31'	63'	89'	111'

RESTRAINT LENGTHS ARE MEASURED FROM THE CENTER LINE OF THE TEE ALONG THE BRANCH FOR THE DISTANCE INDICATED. A MINIMUM OF 5 FEET OF RESTRAINED PIPE MUST BE INSTALLED ON BOTH RUNS OF THE TEE. MEGALUG TYPE RESTRAINERS ARE REQUIRED ON ALL JOINTS.

CREATED 02/24/03 REVISED

RESTRAINED JOINT TABLE TEES (BRANCH SIDE)

PROVIDED FOR INFORMATIONAL PURPOSES ONLY. NO MODIFICATIONS WITHOUT WRITTEN PCU APPROVAL

PASCO COUNTY UTILITIES — DETAIL 32

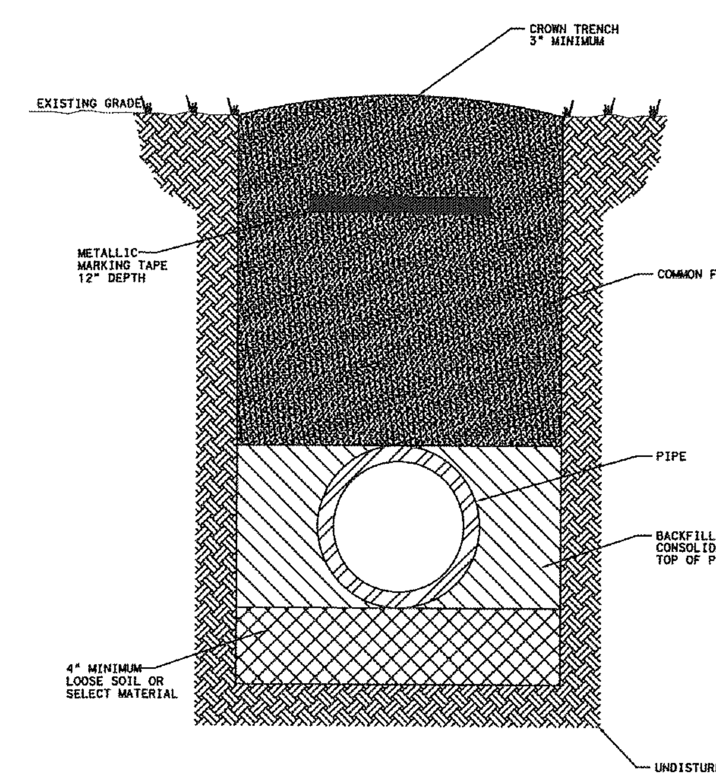

NOTES:
- LOOSE SOIL OR SELECT MATERIAL IS NATIVE SOIL EXCAVATED FROM THE TRENCH FREE OF ROCKS AND FOREIGN MATERIAL.
- COMMON FILL TO BE PLACED AND COMPACTED IN 12" LAYERS. ROLLING EQUIPMENT SHALL NOT BE USED FOR COMPACTION UNTIL A MINIMUM OF 18" OF COMMON FILL HAS BEEN PLACED AND COMPACTED OVER THE PIPE. THREE FEET OF FILL SHALL BE PLACED BEFORE A HYDROHAMMER MAY BE USED FOR COMPACTION.

NTS

CREATED 02/24/03 REVISED

PIPE LAYING CONDITIONS STANDARD UNPAVED AREAS

PROVIDED FOR INFORMATIONAL PURPOSES ONLY. NO MODIFICATIONS WITHOUT WRITTEN PCU APPROVAL

PASCO COUNTY UTILITIES — DETAIL 35

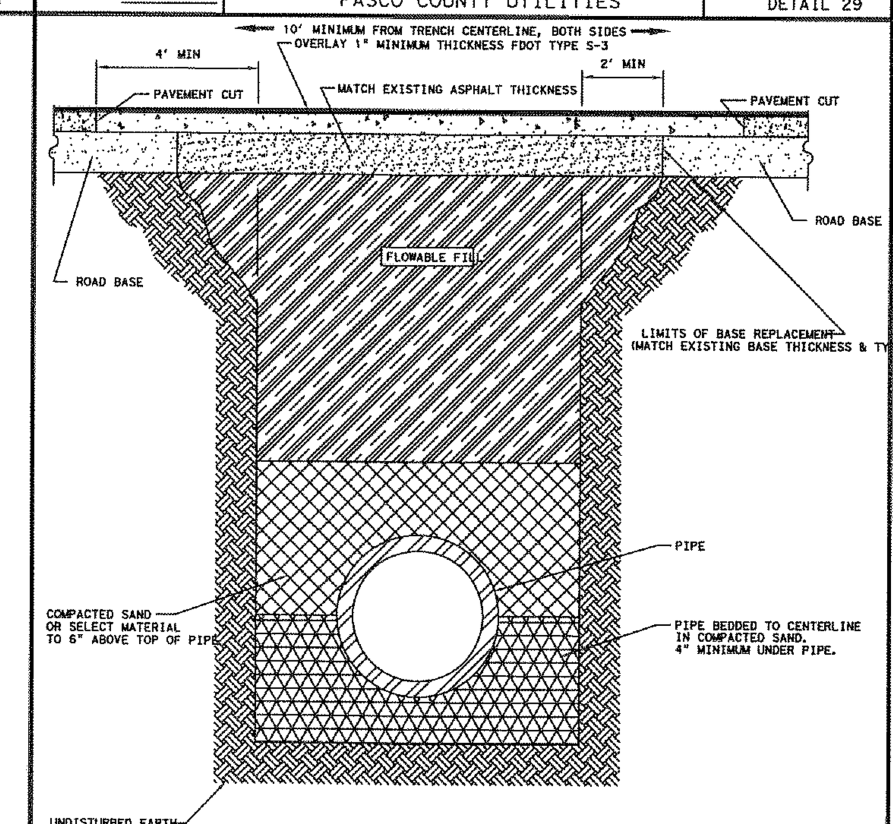

NOTE:
- SELECT MATERIAL IS NATIVE SOIL EXCAVATED FROM THE TRENCH FREE OF ROCKS AND FOREIGN MATERIAL.
- COMPACTION TO TOP OF PILE IS TO BE APPROXIMATELY 98 STANDARD PROCTOR, AASHTO T-99.
- EXISTING CONCRETE/ASPHALT PAVEMENT SURFACE AND BASE TO BE CUT SQUARE WITH CONCRETE SAW.

NTS

CREATED 03/06/03 REVISED

PIPE LAYING CONDITIONS FLOWABLE FILL BACKFILL STANDARD EXISTING PAVED AREAS & ROADWAYS

PROVIDED FOR INFORMATIONAL PURPOSES ONLY. NO MODIFICATIONS WITHOUT WRITTEN PCU APPROVAL

PASCO COUNTY UTILITIES — DETAIL 36

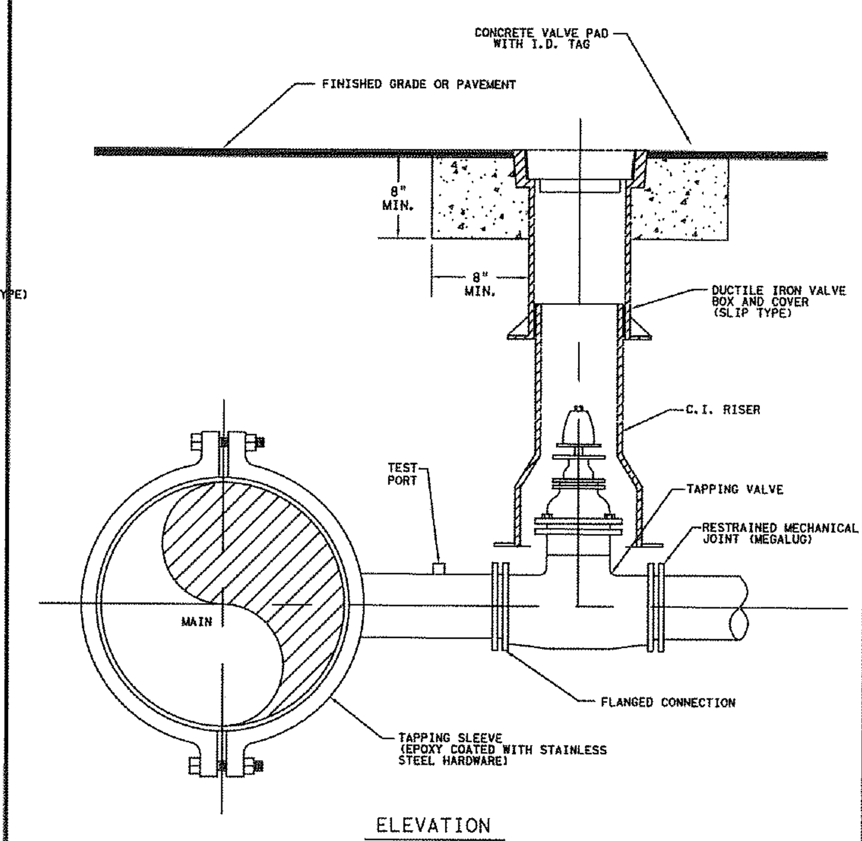

ELEVATION

NOTES:
- SADDLE CONNECTION WILL BE TESTED TO 150 PSI PRIOR TO TAPPING MAIN.
- MECHANICAL JOINTS/UNDERGROUND PIPING SHALL BE RESTRAINED AS SPECIFIED BY COUNTY/ENGINEER.
- VALVE EXTENSION ROD SHALL BE UTILIZED, AS NECESSARY, SO THAT VALVE OPERATING NUT IS A MAXIMUM OF 3' BELOW GRADE.

CREATED 02/24/03 REVISED

WATER, REUSE, AND FORCE MAIN TAPPING DETAIL W/ VALVE LOCATION

PROVIDED FOR INFORMATIONAL PURPOSES ONLY. NO MODIFICATIONS WITHOUT WRITTEN PCU APPROVAL

PASCO COUNTY UTILITIES — DETAIL 37

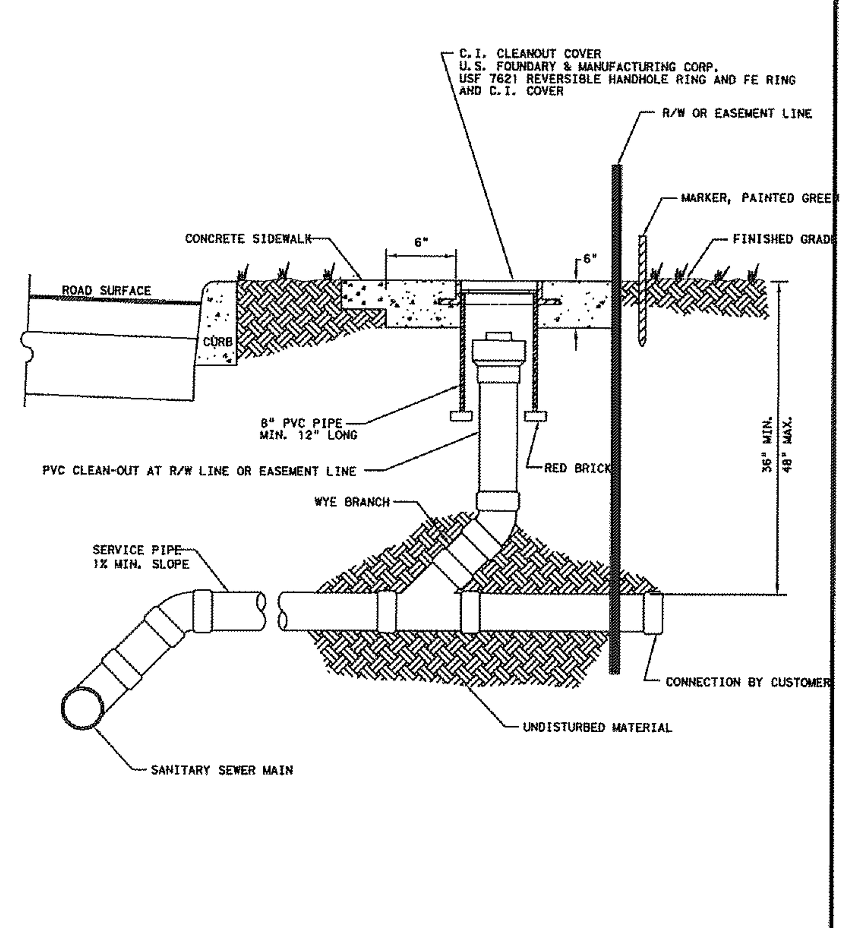

NTS

CREATED 02/24/03 REVISED

SANITARY SEWER - SINGLE WYE CONNECTION AND TYPICAL CLEAN-OUT

PROVIDED FOR INFORMATIONAL PURPOSES ONLY. NO MODIFICATIONS WITHOUT WRITTEN PCU APPROVAL

PASCO COUNTY UTILITIES — DETAIL 45

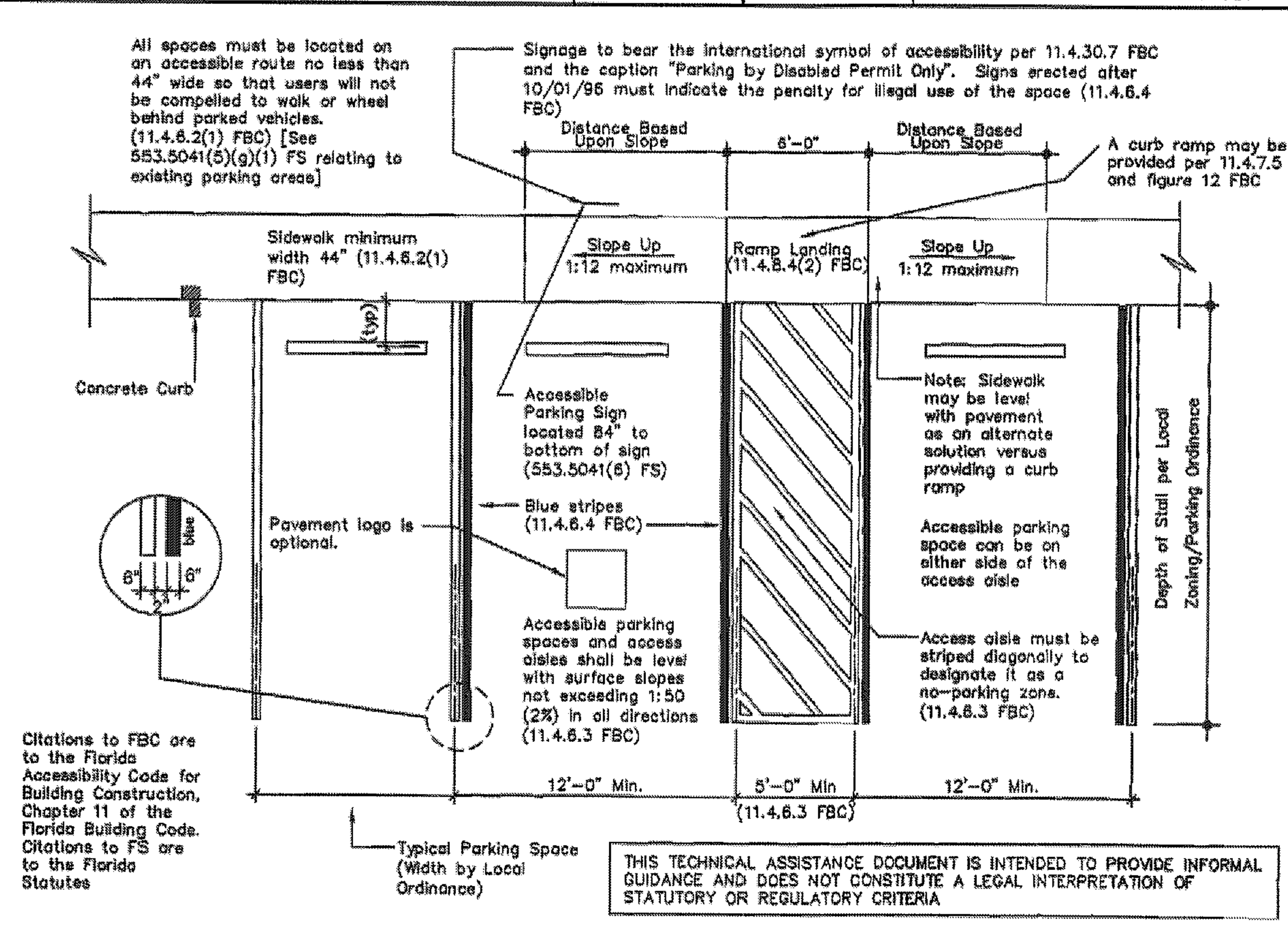

Recommended Accessible Parking Space(s) Design for Single Line Requirements

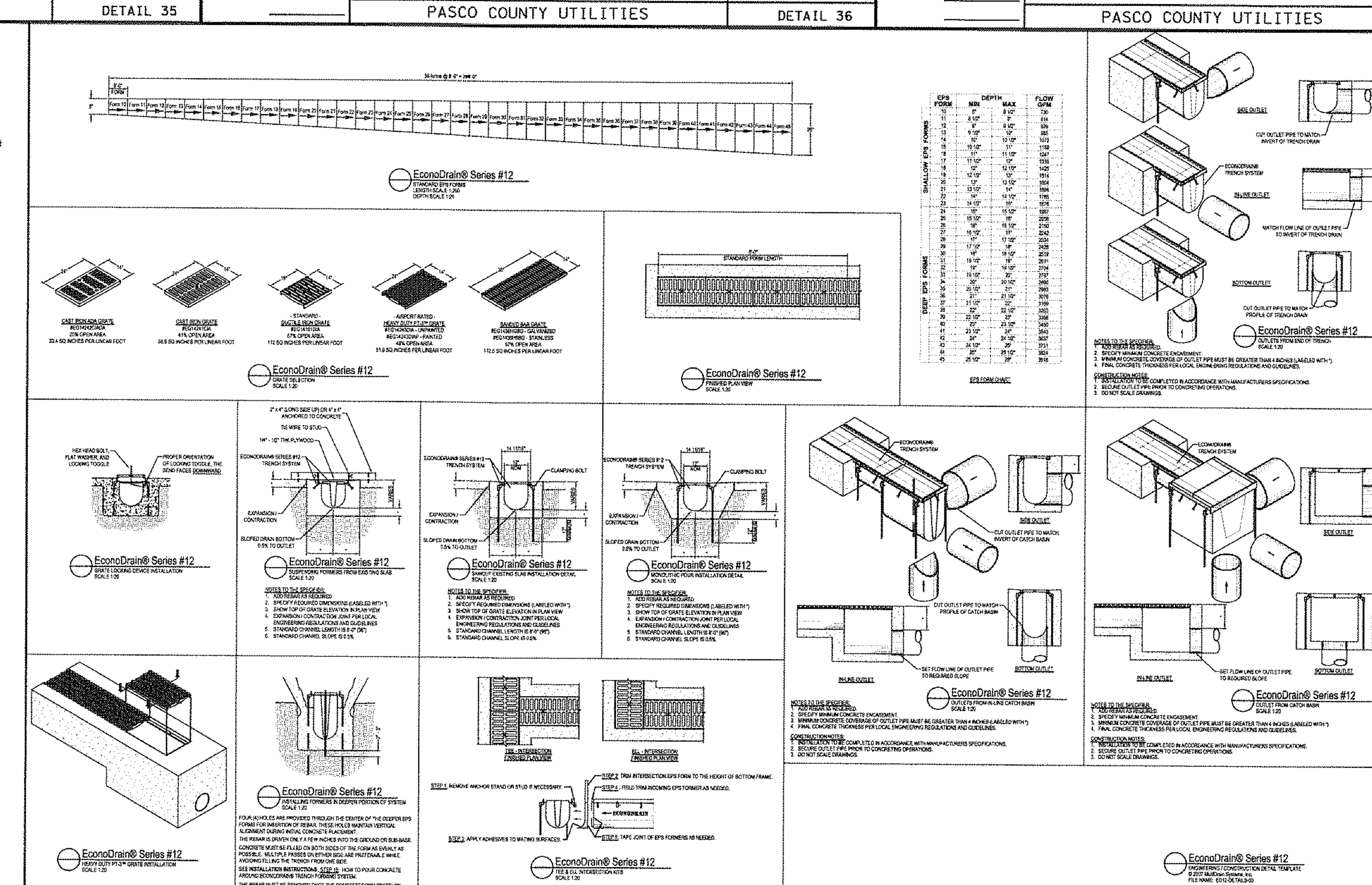

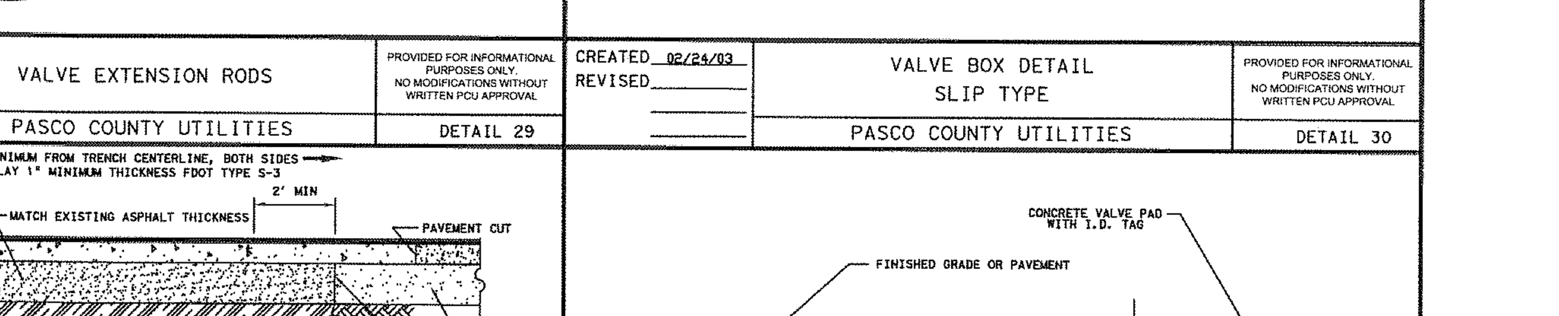

Certificate Of Authorization: #27614

REV	DATE	DESCRIPTION	BY	ISSUE REF
----	----	----	----	----
----	----	----	----	----
----	----	----	----	----
----	----	----	----	----

Adams

27524 Cashford Circle, Suite 101 ■ Wesley Chapel, Florida 33544 ■ (813) 929-7499

OFFICE: FLORIDA REGION

ADDRESS: KROC DRIVE - OAK BROOK, ILLINOIS 60521

MCDONALD'S L/C: 009-2596

McDonald's USA, LLC

These drawings and specifications are the confidential and proprietary property of McDonald's USA, LLC and shall not be copied or reproduced without written authorization. The contract documents were prepared for use on this specific site in conjunction with its issue date and are not suitable for use on a different site or at a later time. Use of these drawings for reference or example on another project requires the services of properly licensed architects and engineers. Reproduction of the contract documents for reuse on another project is not authorized.

11929 US HIGHWAY 19
PORT RICHEY,FLORIDA

PLAN APPROVALS

SIGNATURE (2 REQUIRED)	DATE
REGIONAL MGR.	
CONST. MGR.	
OPERATIONS DEPT.	
REAL ESTATE DEPT.	

CO-SIGN SIGNATURES

CONTRACTOR	
OWNER	

ADAMS JOB NO.	2014.086	
STATUS	DATE	BY
DATE DRAWN	SEPT 2015	EAO
PLAN CHECKED	SEPT 2015	TDH
AS-BUILT		

STANDARD DETAILS

D1.0

© Copyright 2015, Adams Engineering

FILENAME: D1.0 STANDARD DETAILS.dwg PLOTTED BY: Edgar Ortiz PLOT DATE: Tuesday, September 22, 2015 PLOT TIME: 6:29:48 PM PLOTTER: Adobe PDF FULL PATH: I:_Projects\2014\2014.086_McD_Hudson Relo - Pasco FL\Drawings\03 - Production\03 - Production\D1.0 STANDARD DETAILS

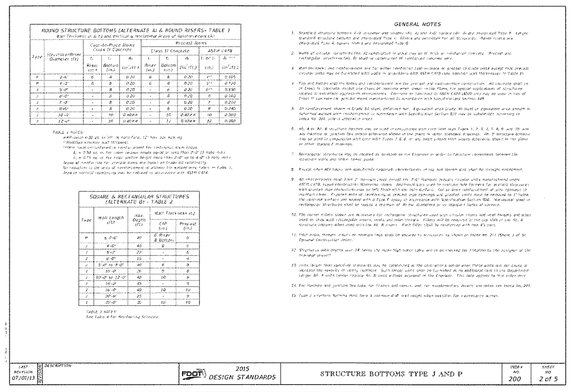

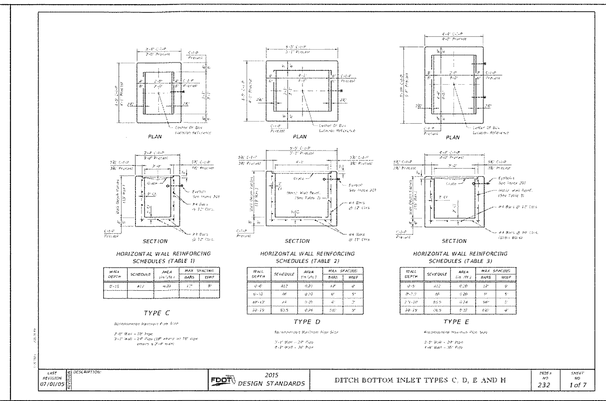

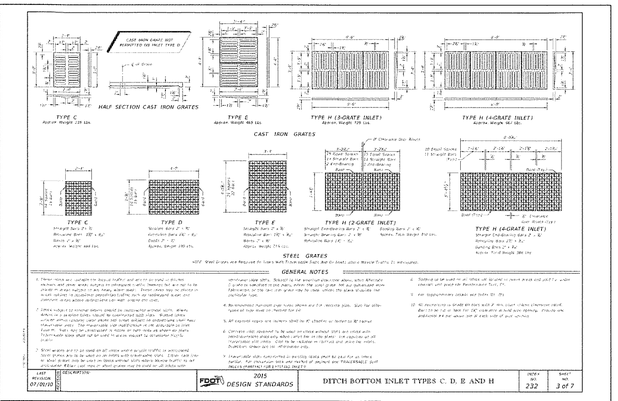

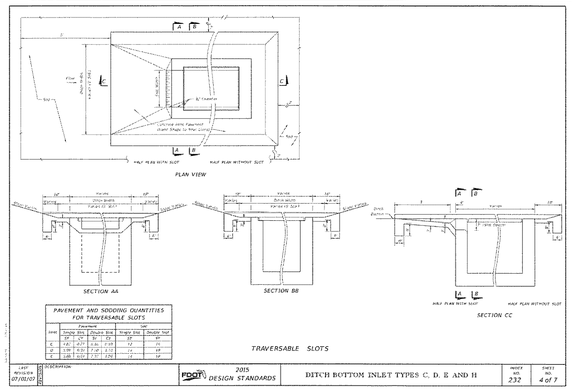

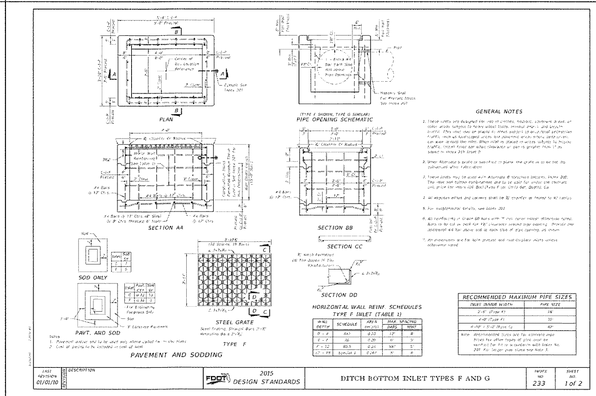

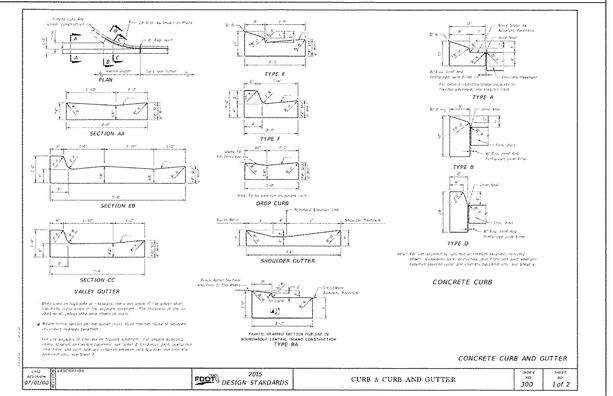

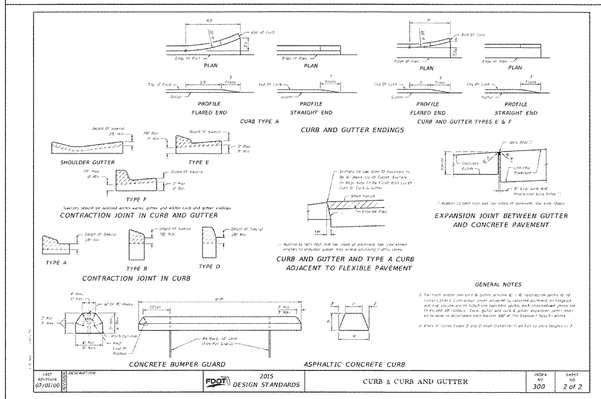

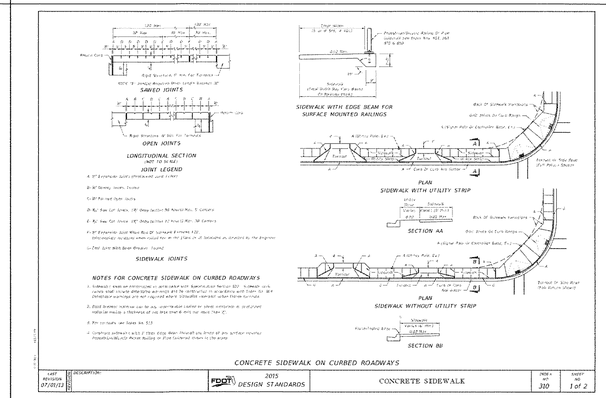

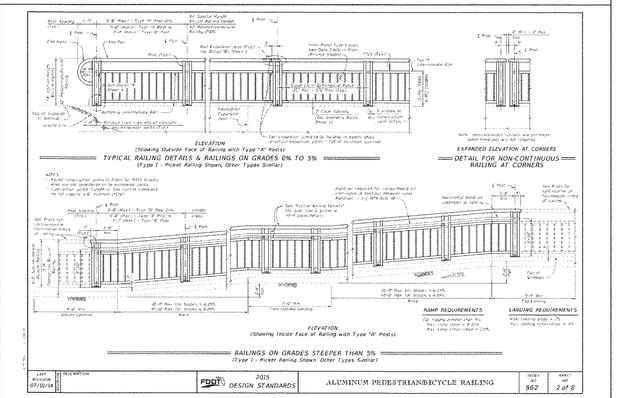

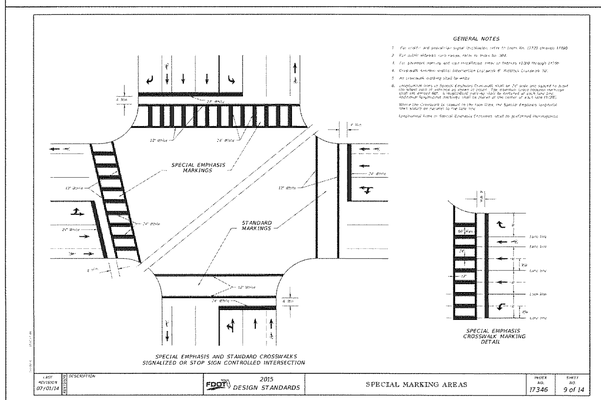

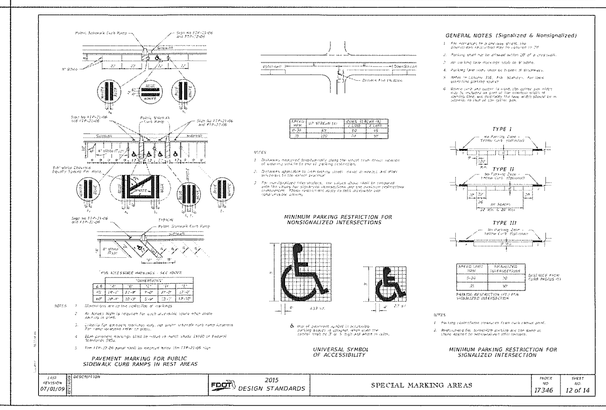

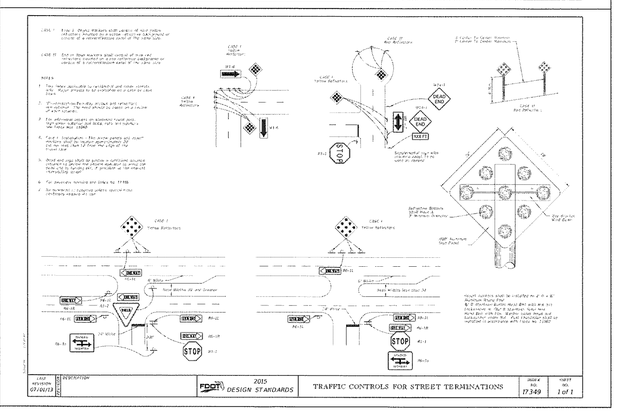

REV	DATE	DESCRIPTION	BY	ISSUE REF.
-----	-----	-----	-----	-----
-----	-----	-----	-----	-----
-----	-----	-----	-----	-----
-----	-----	-----	-----	-----
-----	-----	-----	-----	-----

Adams
27534 Caldfield Circle, Suite 101 ■ Wesley Chapel, Florida 33544 ■ (813) 929-1169

TIM D. HODES
LICENSE
9-22-15
No. 67017
STATE OF FLORIDA
PROFESSIONAL ENGINEER

Certificate Of Authorization: #27614

MCDONALDS L/C:
009-2596

McDonald's USA, LLC

These drawings and specifications are the confidential and proprietary property of McDonald's USA, LLC and shall not be reproduced in whole or in part without permission. They are not to be used for any purpose other than the specific site in conjunction with its issue date and are not suitable for use on a different site or at a later time. Use of these drawings for reference or example on another project requires the services of properly licensed architects and engineers. Reproduction of this construction documents for reuse on another property is not authorized.

OFFICE: FLORIDA REGION
ADDRESS: KROC DRIVE - OAK BROOK, ILLINOIS 60521

11929 US HIGHWAY 19
PORT RICHEY, FLORIDA

PLAN APPROVALS

SIGNATURE (2 REQUIRED)	DATE
REGIONAL MGR.	
CONST. MGR.	
OPERATIONS DEPT.	
REAL ESTATE DEPT.	

CO-SIGN SIGNATURES

CONTRACTOR
OWNER

ADAMS JOB NO.	2014.0086	
STATUS	DATE	BY
DATE DRAWN	SEPT 2015	EAO
PLAN CHECKED	SEPT 2015	TDH
AS-BUILT		

STANDARD DETAILS

D2.0

© Copyright 2015, Adams Engineering

FULL PATH: I:_Projects\2014\2014.086_McD_Hudson Reno - Pasco FL\Drawings\03 - Production\1_Projects\2014\2014.086_McD_Hudson Reno - Pasco FL\Drawings\03 - Production\0625 STANDARD DETAILS
PLOTTER: PDF-XChange For AcuPrePro
PLOT DATE: Tuesday, September 22, 2015
PLOT TIME: 9:30:37 PM
PLOTTED BY: Edgar Ortiz
FILENAME: D2.0 STANDARD DETAILS.dwg

DRWG. NO. 1PCP31113

NOTES:

1. THE FOOTCANDLE LEVELS AS SHOWN ARE BASED ON THE FOLLOWING CRITERIA. ANY SUBSTITUTIONS IN SPECIFIED FIXTURES OR CHANGES TO LAYOUT WILL AFFECT LIGHTING LEVELS SHOWN AND WILL NOT BE THE RESPONSIBILITY OF SECURITY LIGHTING.
2. THE CONTRIBUTION OF THE SOFFIT / BUILDING LIGHTING IS NOT REFLECTED ON THE DRAWING UNLESS SOFFIT / BUILDING LIGHTING IS SPECIFIED IN THE FIXTURE SCHEDULE BELOW.
3. DISTANCE BETWEEN READINGS 10'
4. FINAL ADJUSTMENTS TO AIMING ANGLE/DIRECTION OF FIXTURES MAY BE REQUIRED TO ELIMINATE LIGHT TRESPASS OR GLARE ONTO ADJOINING PROPERTIES OR ROADWAYS.

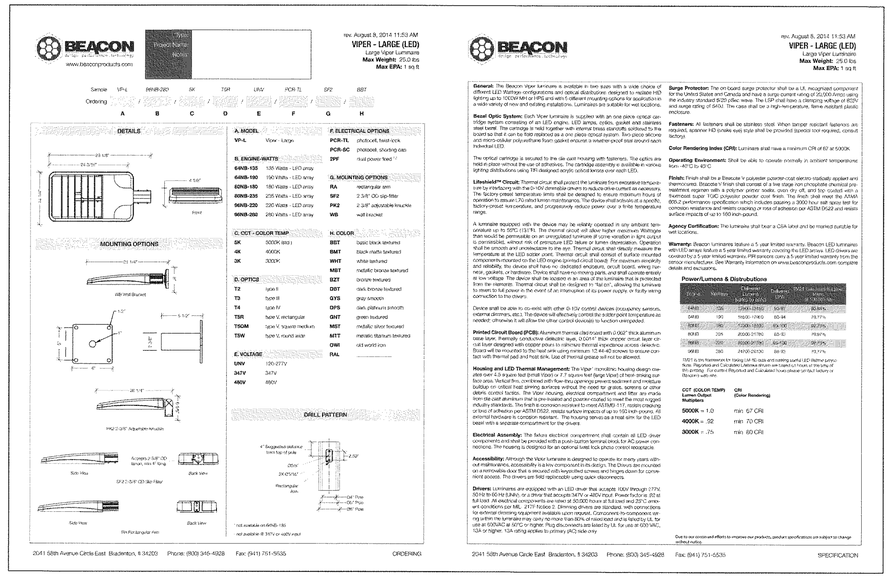

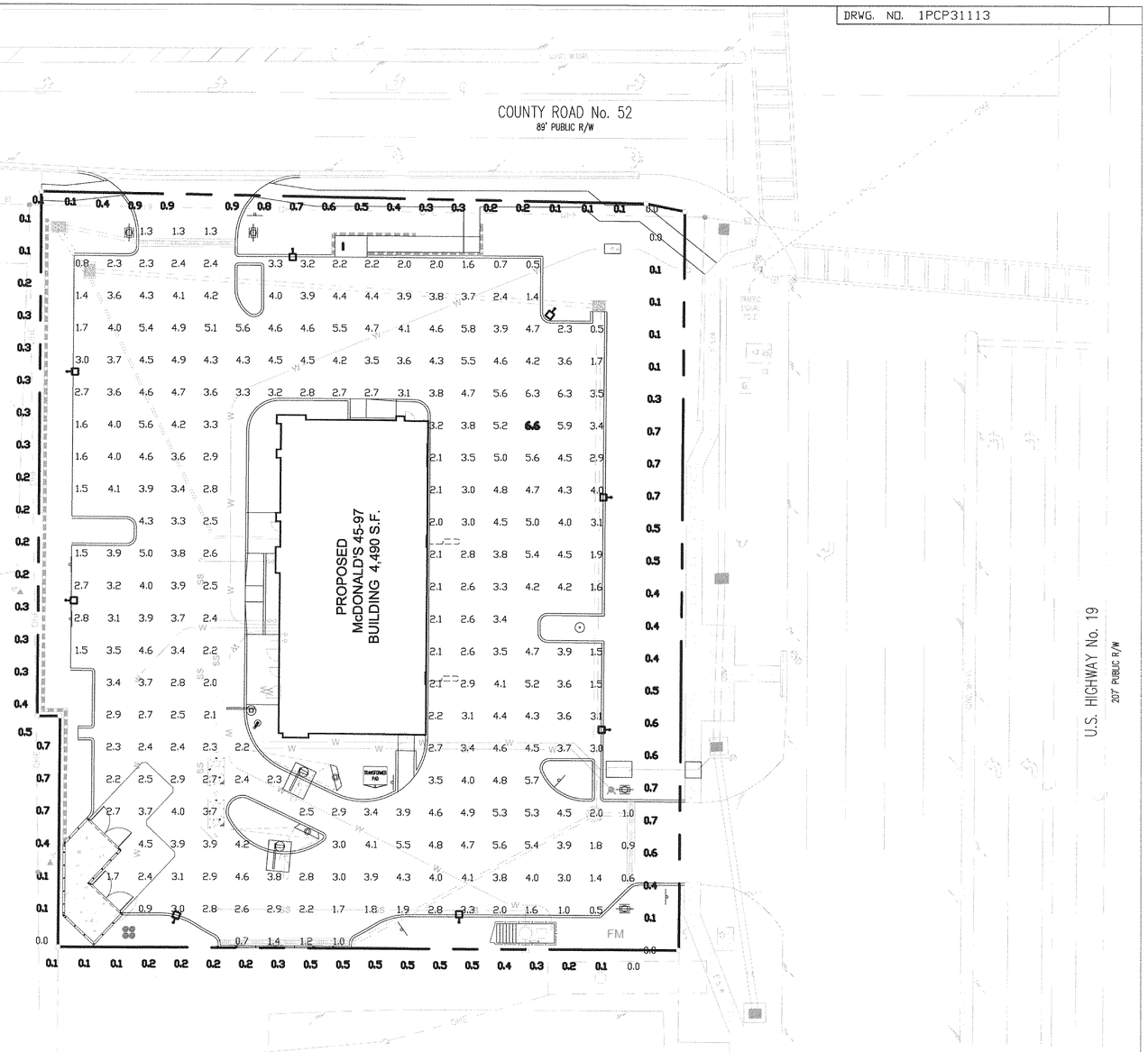

PAVED SURFACE READINGS

Average	3.3
Maximum	6.6
Minimum	0.5
Avg:Min	6.67
Max:Min	13.20

PROPERTY LINE READINGS

Average	**0.4**
Maximum	**1.0**
Minimum	**0.0**
Avg:Min	**N/A**
Max:Min	**N/A**

** - SPECIFY COLOR

FIXTURE TYPE:	SYMBOL	FIXTURE QUANTITY	CONFIG	QUANTITY	TENON TOP FITTERS	QUANTITY	EPA	MOUNTING HEIGHT	LLF	POLE TYPE:	QUANTITY
VP-L-96NB-280-5k-T4-UNV-RA-**-BLC		8	SGL	8	TTFVIPER	8	1.00	25'	0.87	CONCRETE BY OTHERS	8

THIS LAYOUT MAY NOT MEET TITLE 24 OR LOCAL ENERGY REQUIREMENTS. IF THIS LAYOUT NEEDS TO BE TITLE 24 COMPLIANT OR MEET OTHER ENERGY REQUIREMENTS, PLEASE CONSULT FACTORY WITH SPECIFIC DETAILS REGARDING PROJECT REQUIREMENTS SO THAT REVISIONS MAY BE MADE TO THE DRAWING.

THIS LIGHTING PATTERN REPRESENTS ILLUMINATION LEVELS CALULATED FROM LABORATORY DATA TAKEN UNDER CONTROLLED CONDITIONS IN ACCORDANCE WITH ILLUMINATING ENGINEERING SOCIETY APPROVED METHODS. ACTUAL PERFORMANCE OF ANY MANUFACTURER'S LUMINAIRES MAY VARY DUE TO VARIATION IN ELECTRICAL VOLTAGE, TOLERANCE IN LAMPS, AND OTHER VARIABLE FIELD CONDITIONS.

UNLESS OTHERWISE SPECIFIED, ALL DIMENSIONS ARE IN INCHES

NOTES:

SCALE 1" = 20' 0"	DATE	NEXT ASSEMBLY	REF. DRWGS.
DRAWN BY MJW	09/01/15		
CHECKED BY			
APPROVED BY			
APPROVED BY		FINISH	
APPROVED BY			
SHOP ORDER		MATERIAL	
PROJECT NO.			

SECURITY LIGHTING SYSTEMS
Performance Designed Lighting Products
1085 Johnson Dr., Buffalo Grove, Illinois 60089
1-800-544-4848

POINT-BY-POINT FOOTCANDLE PLOT FOR
- McDONALD'S -
11929 US HIGHWAY 19
PORT RICHEY, FL

DRAWING NUMBER 1PCP31113 LP1.0

FULL PATH: T:_Projects\2014\2014.086_McD_Hudson Relo - Pasco FL\Drawings\03 - Production\L1.0 LANDSCAPE PLAN
PLOTTER: Adobe PDF
PLOT TIME: 3:26:15 PM
PLOT DATE: Tuesday, September 22, 2015
PLOTTED BY: Sarai Akin
FILENAME: L1.0 LANDSCAPE PLAN.dwg

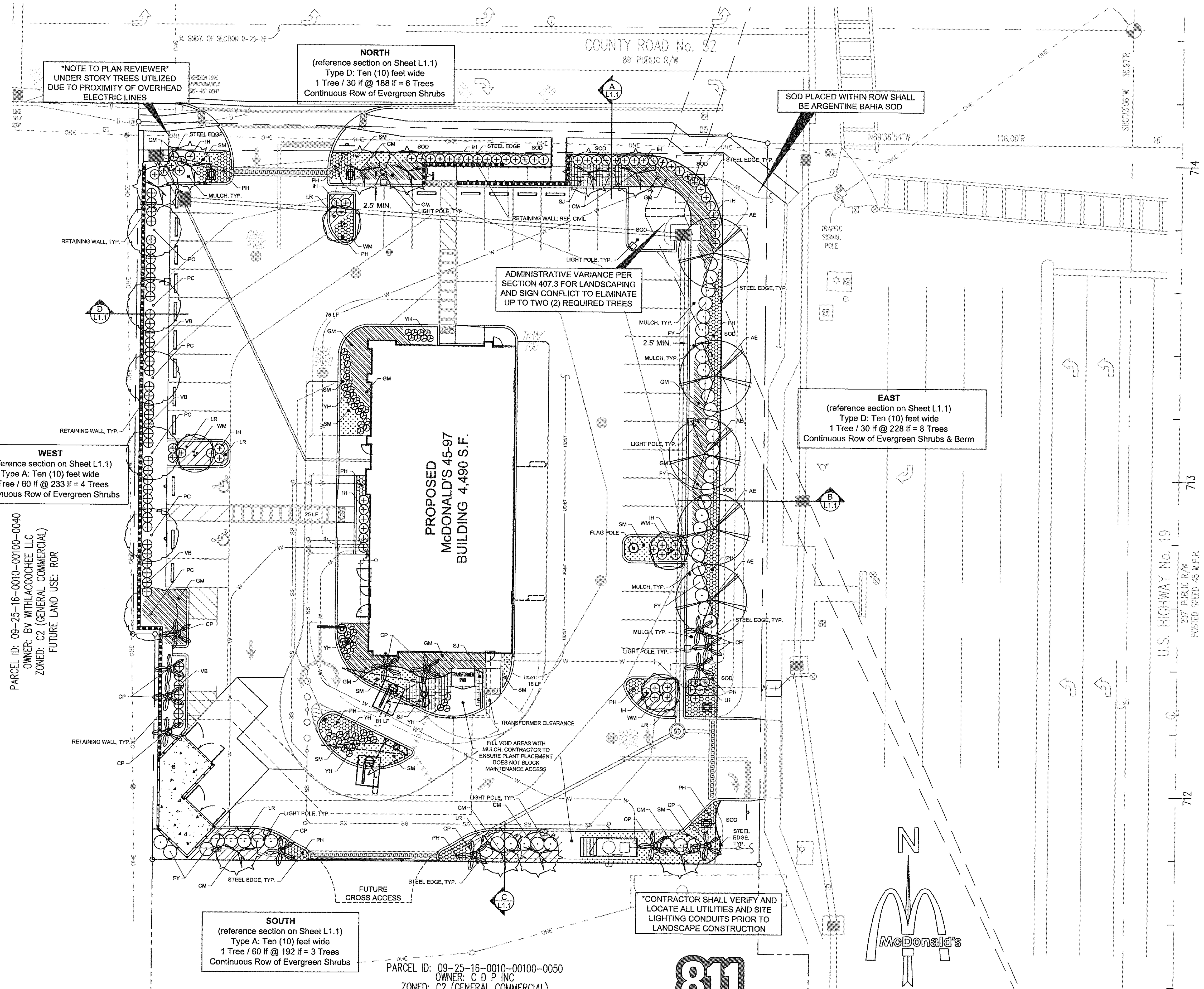

Know what's **below.**
Call before you dig.

SCALE: 1" = 20'

LANDSCAPE REQUIREMENTS for Pasco County, FL

C. General Standards
1. **Design**
d. Diversity
(1) A maximum of fifty (50) percent of the plant materials used, other than trees, may be nondrought tolerant. The use of turfgrass varieties with excellent drought tolerance may exceed the fifty (50) percent limitation.
(2) A minimum of thirty (30) percent of the plant materials, other than trees and turfgrass, shall be native Floridian species suitable for growth in the County.
(3) Tree diversity shall be required based on the number of required trees on site (see Table 905.2-B).

TABLE 905.2-B	
Required Number of Trees	Required Species
21-25	5

(4) Where more than one (1) species is required, even distribution shall be strived for and subject to County approval through the associated review process.

(5) No one (1) plant species of shrubs or ground cover plants or combination thereof, excluding turfgrass, shall constitute more than twenty-five (25) percent coverage of the overall landscape area.

D. Specific Planting Requirements
1. Generally. The following general standards and the specific planting standards below shall apply to all sites:
a. All portions of each site, which are not devoted to buildings, sidewalks, paving, or special landscape features shall be grassed. However, no more than thirty (30) percent of the required landscape area may be grassed; the balance shall be landscaped in shrubs and ground cover plants.

3. Vehicular Use Areas. Landscaping and buffering of vehicular use areas shall be in accordance with Table 905.2.C.

Table 905.2.C
Landscape Area Required: A minimum of ten (10) percent of the on-site, vehicular use area shall be devoted to interior landscaped area.

Shade Trees Required: A minimum of one (1) shade tree for every 200 square feet of required interior landscaped area.

Landscape Islands: A minimum of one (1) landscape island per every ten (10) parking spaces.

Plantings Required and Location: A minimum of one (1) shade tree with shrubs, dwarf shrubs, and/or other ground cover plants per each island. Other than trees, planting materials shall naturally grow no taller than thirty (30) inches. Trees shall be set back from drive aisles a minimum of four (4) feet.

Landscaping Required for Terminal Islands: Shade trees, shrubs, dwarf shrubs, and ground cover plants shall be used in terminal islands. If a large tree with a mature canopy of thirty-five (35) feet or more is proposed in a double island, only one (1) such tree shall be planted in the island.

4. Building Perimeters
Building perimeter landscaping shall be placed such that a minimum of fifty (50) percent of the building perimeter is landscaped.

a. All shopping center, retail, office, apartment, condominium, townhouse, clubhouse, and similar uses shall provide perimeter building landscaped beds in a minimum amount equal to ten (10) percent of the proposed building ground-level floor area.

b. These building perimeter landscapings shall be located adjacent to the building and shall consist of landscaped areas, raised planters, or planter boxes that are a minimum of five (5) feet wide. These landscaped areas shall include shade trees, understory trees and/or palms, shrubs, dwarf shrubs, and ground cover plants.

5. Perimeter Landscape Buffering and Screening:
Type A Buffer: Ten (10) feet wide.
Single row of trees; maximum sixty (60) feet on center
Continuous row of evergreen shrubs

Type D Buffer: Ten (10) feet wide
Shade and understory trees shall be planted of thirty (30) feet apart. Minimum spacing twenty (20) feet; maximum forty-five (45) feet. Where a vehicular use area abuts the right-of-way, the buffer shall also contain an earthen berm a minimum of eighteen (18) inches in height; shall be planted so as to form a continuous, unbroken, solid visual screen within one (1) year of time of plantings; and ground cover plants.

E. Landscape Maintenance and Prohibitions
1. All landscaping, including those areas located in the public right-of-way as approved through the applicable development review process, shall be maintained by an entity other than the County.
2. All required landscaping shall be maintained in a healthy condition in perpetuity in accordance.
3. All installed landscaping shall be neat and orderly in appearance and kept free of refuse, debris, disease, pests, and weeds, and shall be fertilized and irrigated as needed to maintain plants in a healthy condition.
4. Ongoing maintenance to prevent the establishment of prohibited, invasive species is required.
5. Any plant materials of whatsoever type and kind required by these regulations shall be replaced within thirty (30) days of their demise and/or removal.
6. Paving, treating, or covering a required landscape area in any way that renders it impervious is prohibited.
7. Parking of vehicles shall not be permitted in required landscape areas.

Pasco County Landscaping Standard Notes (Pasco LDC 905.2)

1. **Maintenance Responsibility.** The County is not responsible for maintenance of any landscaping unless approved through a County maintenance agreement. (LDC 905.2-C.1.a)
2. **Clear-Sight Triangle.** Where a driveway/accessway intersects a road right-of-way or where two (2) road rights-of-way intersect, vegetation, structures, and non-vegetative visual screens shall not be located so as to interfere with the clearsight triangle as defined in this Code or the Florida Department of Transportation, Manual of Uniform Minimum Standards, most recent edition (Green Book), whichever is more restrictive. (LDC 905.2-C.1.b)
3. **Sustainable Practices.** Landscaping shall be installed so that landscaping materials meet the concept of right material/right place. Installed trees and plants shall be grouped into zones according to water, soil, climate, and light requirements. Plant groupings based on water requirements are drought tolerant, natural, and oasis. (LDC 905.2-C.1.c)
4. **Diversity.** A maximum of 50 percent of the plant materials used, other than trees, may be non-drought tolerant. A minimum of 30 percent of the plant materials, other than trees and turfgrass, used to fulfill the requirements of this subsection shall be native Floridian species, suitable for growth in the county. (LDC 905.2-C.1.d)
5. **Diversity.** No one plant species of shrubs or ground cover plants, excluding turfgrass, shall constitute more than 25 percent coverage of the overall landscape area. (LDC 905.2-C.1.d.5)
6. **Quality.** All plant materials shall be Florida No. 1 grade per "Grades and Standards for Nursery Plants," Florida Department of Agriculture and Consumer Services (FDACS), which is incorporated herein by reference. (LDC 905.2-C.2.a)
7. **Avoid Easements.** Trees shall not be planted within any easement so as to interfere with the use of that easement, nor under any present or planned overhead utility, nor in any rights-of-way without County approval through the associated review process. (LDC 905.2-C.3.c)
8. Mulch shall be used in conjunction with living plant materials so as to cover exposed soil. Mulch shall be installed to a minimum depth of three (3) inches. The mulch should not be placed directly against the plant stem or tree trunk. Mulch shall not be required for annual beds. Stone or gravel may be used to cover a maximum of 20 percent of the landscaped area. (LDC 905.2-C.3.d)
9. **Quality Practices.** All landscaping shall be installed in accordance with standards and practices of the Florida Nursery, Growers, and Landscape Association and the Florida Chapter of the International Society of Arboriculture. (LDC 905.2-C.3.e)
10. All portions of a lot upon which development has commenced, but not continued for a period of 30 days, shall be planted with a grass species or ground cover to prevent erosion and encourage soil stabilization. Adequate coverage, so as to suppress fugitive dust, shall be achieved within 45 days. (LDC 905.2-C.3.g)
11. All required landscaping shall be maintained in a healthy condition in perpetuity in accordance with this Code. (LDC 905.2-E.2)
12. Ongoing maintenance to prevent the establishment of prohibited exotic species is required. (LDC 905.2-E.4)

TREE REMOVAL TABLE

PASCO COUNTY LDC SECTION 802.3.C TREE REPLACEMENT & MITIGATION		
DBH of Trees Removed	Qty. of Oak Trees	Qty. of Other Trees
10"	2	0
11"	1	0
13"	1	0
14"	1	1
16"	0	1
17"	2	0
18"	1	1
19"	1	1
20"	0	1
22"	1	1
Total tree inches removed	151" of Oak Trees	109" of Other Trees
Tree Replacement Required	151" inches (1:1 ratio)	37" inches (1:3 ratio)

TOTAL TREE REPLACEMENT REQUIRED: 188 CALIPER INCHES

TOTAL TREE REPLACEMENT PROVIDED: 114 CALIPER INCHES

TOTAL TREE MITIGATION REQUIRED BY OWNER: 74 CALIPER INCHES

LANDSCAPE CALCULATIONS for Pasco County, FL

	REQUIRED	PROVIDED	% REQ.	% PROV.
Non-Drought Tolerant Plants (Max. 50% of 775 plantings provided)	<387 plants	652 plants	<50%	84.1%
Native Shrub & Groundcover Requirement (Min. 30% of 775 plantings provided shall be FL Native)	232 plants	359 plants	30%	46.3%
Grassed Area (Max. 30% of 11,934 sf provided landscape area)	<3,580 sf	3,532 sf	<30%	29.9%
Vehicular Use Landscape Area Required (10% of 25,502 sf of on-site vehicular use area)	2,550 sf	8,437 sf	10%	33%
Vehicular Use Shade Trees Required (1 tree / 200 square feet of required interior landscape area)	12.8 Trees	13 Trees	N/A	N/A
Vehicular Use Landscape Islands (1 landscape island / 10 parking spaces @ 38 spaces)	4 landscape islands	4 landscape islands	N/A	N/A
Building Perimeter Landscape Area Required (50% of building perimeter @ 288 lf)	144 lf	200 lf	50%	69.4%
Building Perimeter Landscape Area Required (10% of building ground level area @ 4,490 sf)	449 sf	1,309 sf	10%	29.1%
North Boundary (CR 52) Perimeter Buffer Trees Required - Type D (1/30 lf @ 188 lf)	6.2 Trees	6 Trees	N/A	N/A
East Boundary (US 19) Perimeter Buffer Trees Required - Type D (1/30 lf @ 228 lf)	7.6 Trees	6 Trees*	N/A	N/A
South Boundary (zoned C-2) Perimeter Buffer Trees Required - Type A (1/60 lf @ 192 lf)	3.2 Trees	3 Trees	N/A	N/A
West Boundary (zoned C-2) Perimeter Buffer Trees Required - Type A (1/60 lf @ 233 lf)	3.8 Trees	6 Trees	N/A	N/A

*Per Section 407.3 Administrative Variance may be granted where Landscaping and Sign Conflicts which allows eliminating up to two (2) required trees to allow necessary line of sight to a sign.

Plant Material List

SYM.	KEY	QTY.	COMMON NAME / SCIENTIFIC NAME	O.C.	ROOT	SIZE	HEIGHT	SPREAD	COMMENT	FLORIDA NATIVE	DROUGHT TOLERANT
	PC	6	Pond Cypress / Taxodium ascendens	N/A	B&B	3" cal.	10' min.	5' min.	Strong Central Leader, Straight Trunk, Healthy, Full, Symmetrical Canopy, Matched across species	Yes	No
	AE	5	'Allee' Elm / Ulmus parvifolia 'Emer II'	N/A	B&B	3" cal.	10' min.	4' min.	Strong Central Leader, Straight Trunk, Healthy, Full, Symmetrical Canopy, Matched across species	No	Yes
	CP	13	Cabbage Palm / Sabal palmetto	N/A	B&B	3" cal.*	10-14' min.	4' min.	10-14' Clear Trunk, Strong, Straight 'Slick' Trunk, May be hurricane cut to reduce transplant shock	Yes	Yes
	WM	4	Southern Wax Myrtle / Myrica cerifera	N/A	Cont.	3" cal.	8' min.	4" min.	Tree Form, Multi-trunk, 3-cane min., equal to or greater than tree (3) caliper inches, Healthy, Full	Yes	Yes
	CM	10	'Red Rocket' Crape Myrtle / Lagerstroemia indica 'Whit IV'	N/A	Cont.	3" cal.	8' min.	4" min.	Tree Form, Multi-trunk, 3-cane min., equal to or greater than tree (3) caliper inches, Healthy, Full	No	Yes
	FY	45	Florida Yew / Podocarpus macropphylla	48"	Cont.	7 gal.	36" min.	36" min.	Full, Healthy, Branching to Ground	No	No
	IH	74	Dwarf Indian Hawthorn / Raphiolepis indica 'Dwarf'	36"	Cont.	5 gal.	24" min.	18" min.	Full, Healthy, Branching to Ground	No	No
	VB	46	Walters Viburnum / Viburnum obovatum	48"	Cont.	3 gal.	18" min.	18" min.	Full, Healthy,Good Form	Yes	Yes
	YH	61	Dwarf Yaupon Holly / Ilex vomitoria 'Nana'	24"	Cont.	3 gal.	18" min.	18" min.	Full, Healthy,Good Form	Yes	Yes
	GM	1,026 sf	Gulf Muhly Grass / Muhlenbergia capillaris	36"	Cont.	5 gal.	24" min.	18" min.	Full, Healthy	Yes	Yes
	SJ	316 sf	'Compacta' Shore Juniper / Juniperus conferta	48"	Cont.	1 gal.	4" min.	12" min.	Full, Healthy	No	Yes
	SM	749 sf	Sunshine Mimosa / Mimosa strigillosa	24"	Cont.	1 gal.	4" min.	12" min.	Full, Healthy	Yes	Yes
	LR	491 sf	'Emerald Goddess' Liriope / Liriope Muscari	24"	Cont.	1 gal.	12" min.	12" min.	Full, Healthy	No	Yes
	PH	850 sf	Purple Heart / Tradecantia pallida	24"	Cont.	1 gal.	12" min.	12" min.	Full, Healthy	No	Yes

*3" caliper assigned to palms are for Pasco County calculation purposes only, the specified clear trunk height shall govern container size
All Plant Material shall be in Accordance to the Current Edition of The American Standard for Nursery Stock

LANDSCAPE PROJECT NOTES

All plant material shall be Florida Grade #1 or better as specified in Florida Grades and Standards for Nursery Plants updated August 2015. All landscape installation shall conform to the Florida Chapter, International Society of Arboriculture Standards for Planting and the Florida Nursery Growers and Landscape Association.

Refer to Sitework Specifications for all information needed for landscape work.

Notify Landscape Architect or designated representative of any layout discrepancies or any condition which may prohibit the installation as shown.

Verify and locate all utilities and site lighting conduits before landscape construction begins. Protection of all utilities is the responsibility of the Contractor.

All landscape planting areas illustrated shall be graded smooth with three inches (3") of topsoil and three inches (3") of compost applied and consistently blended (tilled) to a depth of nine inches (9"). If adequate or sufficient topsoil is not available on site, the Contractor shall provide topsoil per the specifications and approved by the Owner. To obtain final grade, excavation may be necessary to accept the required depth of topsoil/compost mix with surface dressing or mulch. All beds shall be crowned to anticipate settlement and ensure drainage without disrupting surrounding planned drainage paths. Any areas disturbed for any reason prior to final acceptance of the project shall be corrected by the Contractor at no additional expense to the Owner.

All landscaped areas will be irrigated with an underground automatic system.

Quantities shown on these plans are for reference only. Plant spacing is as indicated in the Plant Material List unless otherwise noted. The Contractor has full responsibility to provide coverage in all planting areas as specified.

All trees and shrubs shall be installed per planting details.

Trees shall be planted at least five feet (5') from any utility line or sidewalk, and to the outside of utility easements with a clear ten feet (10') around fire hydrants. Furthermore, planting within areas of turf shall give priority of location to irrigation. Trees, shall not be planted within five feet (5') of a spray head or ten feet (10') of a rotor. Remaining irrigation components shall respect the location of the illustrated landscape design. Shrubs, regardless of type, shall not be planted within thirty inches (30") of bed perimeters.

All plant material shall be maintained in a healthy and growing condition, and must be replaced with similar variety and size if damaged or removed. Container grown plant material is preferred, however ball and burlap material may be substituted as indicated in the plant material list.

All planting beds as designated shall be bordered by Owner approved four inch (4") steel edging w/ 3/16" min. thickness unless bed is bordered by concrete. Steel edging adjacent to decomposed granite beds shall have a 1/4" min. thickness. Terminate edging flush with paved surface with no sharp corners exposed.

A four inch (4") dressing of dark brown shredded hardwood mulch over a 4.1 oz, woven polypropylene, needle-punched fabric or equal weed barrier shall be used in all plant beds and around all trees. Single trees or shrubs shall be mulched to the outside edge of the saucer or landscape island (See planting details).

Fertilize all plants at the time of planting with 10-10-10 time release fertilizer.

SOD PROJECT NOTES

EROSION CONTROL:
Throughout the project and the maintenance period for turfgrass, it is the Contractor's responsibility to maintain the topsoil in place at specified grades. Topsoil and turfgrass losses due to erosion will be replaced by the Contractor until ESTABLISHMENT and ACCEPTANCE is achieved.

SOIL PREPARATION:
All slopes and areas disturbed by construction, except those occupied by buildings, structures, or paving shall be graded smooth and four (4") inches of topsoil applied. If adequate topsoil is not available onsite, the Contractor shall provide topsoil as approved by the Owner. The area shall be dressed to typical sections and plowed to a depth of five (5") inches. Soil shall be further prepared by the removal of debris, weeds and stones larger than 3/4 inch in diameter. After tillage and cleaning, all areas to receive turf shall be leveled, fine graded, and drug with a weighted spike harrow or float drag.

GRASS SOD:
Turfgrass sod shall be 100% St. Augustine Grass. Sod shall consist of stolons, leaf blades, rhizomes and roots with a healthy, virile system of dense, thickly matted roots throughout the soil of the sod for a thickness not less than three-quarters (3/4") inch. Sod shall be alive, healthy, vigorous, free of insects, disease, stones, and undesirable foreign materials and grasses. The grass shall have been mowed prior to sod cutting so that the height of grass shall not exceed four (4") inches. Sod shall have been produced on growing beds of clay-loam topsoil. Sod shall not be harvested or planted when its moisture condition is so excessively wet or dry that its survival will be affected. All sod is to be harvested, delivered, and planted within a thirty-six (36) hour period of time. Sod shall be protected from exposure to wind, sun, and freezing. Should installation occur between November and March, sod shall include an over-seed of Annual Rye for a grown-in appearance.

IRRIGATION:
In the absence of an irrigation system or areas beyond the coverage limits of a permanent irrigation system, Contractor shall water sod temporarily to develop adequate growth and establishment before regular maintenance begins. Turf shall be watered until firmly established.

Water shall be furnished by the Contractor with means and methods available to achieve acceptable turf. The water source shall be clean and free of industrial wastes or other substances harmful to the growth of the turf.

MAINTENANCE REQUIREMENTS:
Vegetation should be inspected regularly to ensure that plant material is established properly and remains healthy. Mowing, trimming and supervision of water applications shall be the responsibility of the Contractor until the Owner or Owner's Representative accepts and assumes regular maintenance.

REV	DATE	DESCRIPTION	BY	ISSUE REF
----	----	----	----	----
----	----	----	----	----
----	----	----	----	----
----	----	----	----	----

Adams
27524 Cashford Circle, Suite 101 ■ Wesley Chapel, Florida 33544 ■ (813) 929-7499

09/22/15
REGISTERED LANDSCAPE ARCHITECT SARAI R. AKIN LA 6667222 STATE OF FLORIDA

Certificate Of Authorization: #27614

OFFICE: FLORIDA REGION
ADDRESS: KROC DRIVE - OAK BROOK, ILLINOIS 60521
MCDONALD'S L/C: 009-2596

McDonald's USA, LLC

These drawings and specifications are the confidential and proprietary property of McDonald's USA, LLC and shall not be copied or reproduced without written authorization. The contract documents were prepared for use on this specific site in conjunction with its issue date and are not suitable for use on a different site or at a later time. Use of these drawings for reference or example on another project requires the services of properly licensed architects and engineers. Reproduction of the contract documents for reuse on another project is not authorized.

11929 US HIGHWAY 19
PORT RICHEY, FLORIDA

PLAN APPROVALS

SIGNATURE (2 REQUIRED)	DATE
REGIONAL MGR.	
CONST. MGR.	
OPERATIONS DEPT.	
REAL ESTATE DEPT.	

CO-SIGN SIGNATURES

CONTRACTOR	
OWNER	

ADAMS JOB NO.	2014.086	
STATUS	DATE	BY
DATE DRAWN	SEPT 2015	SRA
PLAN CHECKED	SEPT 2015	TDH
AS-BUILT		

LANDSCAPE PLAN

L1.0

© Copyright 2015, Adams Engineering

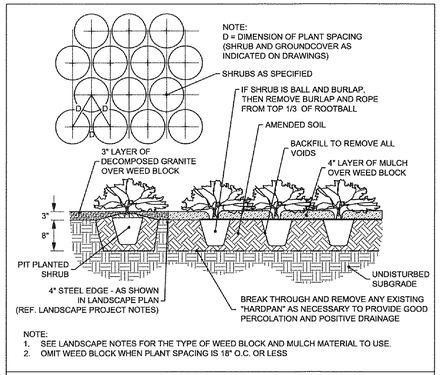

NOTE:
1. SEE LANDSCAPE NOTES FOR THE TYPE OF WEED BLOCK AND MULCH MATERIAL TO USE.
2. OMIT WEED BLOCK WHEN PLANT SPACING IS 18" O.C. OR LESS

SHRUB PLANTING AND SPACING N.T.S.

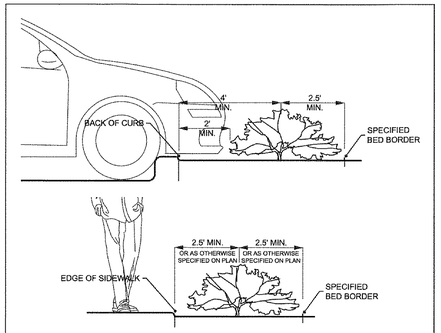

NOTE: SEE LANDSCAPE NOTES AND SHRUB PLANTING AND SPACING DETAIL FOR INSTALLATION.

SHRUB DISTANCE FROM EDGE OF BED N.T.S.

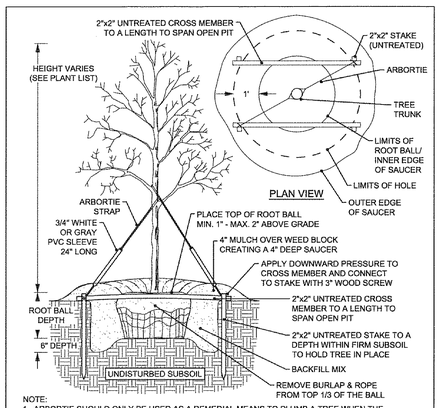

NOTE:
1. ARBORTIE SHOULD ONLY BE USED AS A REMEDIAL MEANS TO PLUMB A TREE WHEN THE PRIMARY BELOW GRADE STAKING CAN NO LONGER BE ADJUSTED EFFECTIVELY AND CONDITIONS ARE WARRANTED BY THE LANDSCAPE ARCHITECT.
2. SEE LANDSCAPE NOTES FOR THE TYPE OF WEED BLOCK AND MULCH MATERIAL TO USE.

TREE PLANTING N.T.S.

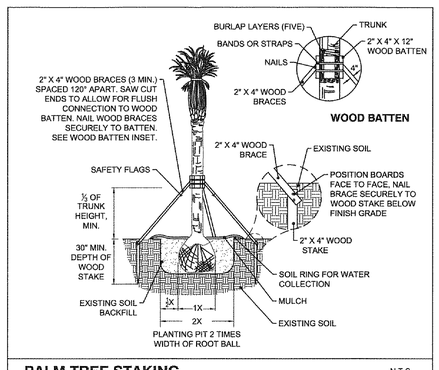

PALM TREE STAKING N.T.S.

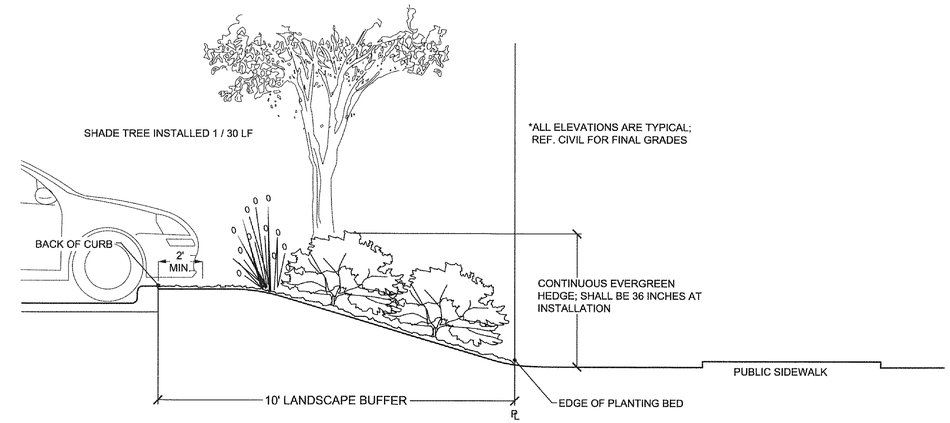

NORTH BUFFER TYPICAL ELEVATION: TYPE D (A / L1.1)
N.T.S.

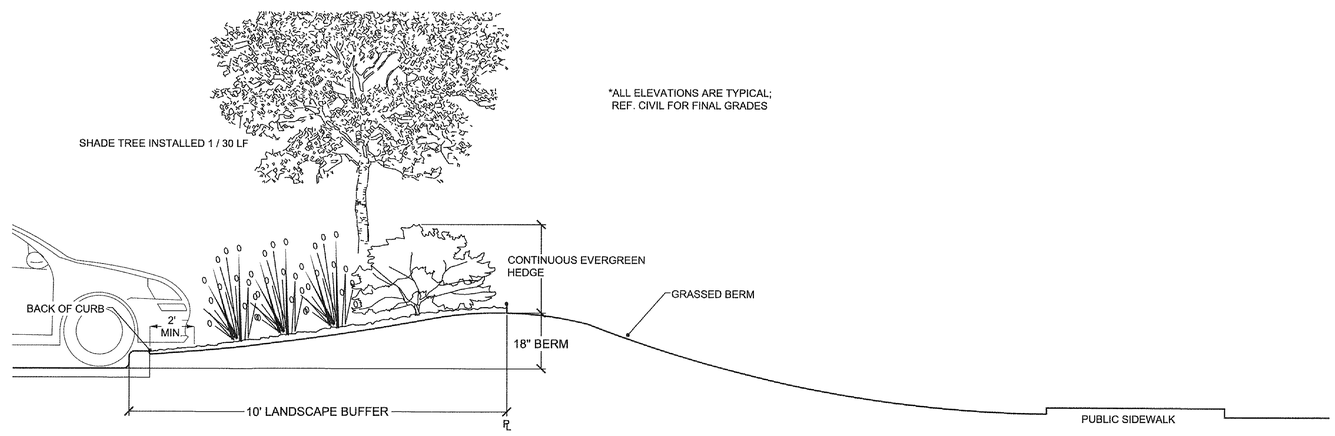

EAST BUFFER TYPICAL ELEVATION: TYPE D (B / L1.1)
N.T.S.

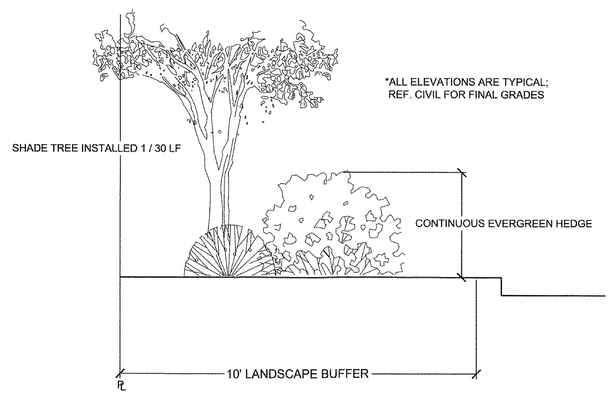

SOUTH BUFFER TYPICAL ELEVATION: TYPE A (C / L1.1)
N.T.S.

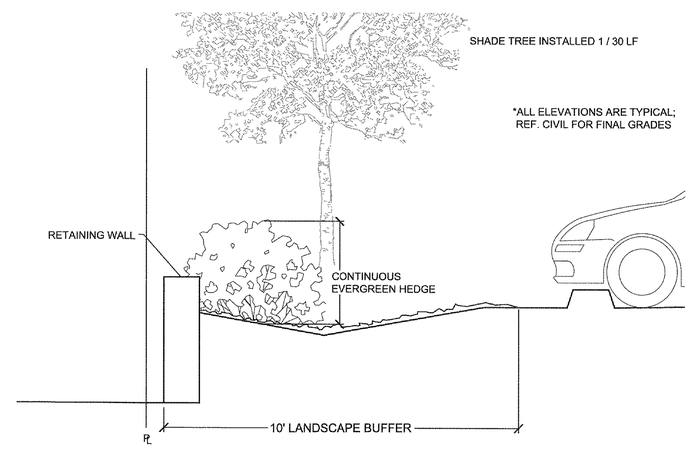

WEST BUFFER TYPICAL ELEVATION: TYPE A (D / L1.1)
N.T.S.

REV	DATE	DESCRIPTION	BY	ISSUE REF.
---	---	---	---	---
---	---	---	---	---
---	---	---	---	---
---	---	---	---	---
---	---	---	---	---

Adams
27524 Guilford Circle, Suite 101 ■ Wesley Chapel, Florida 33544 ■ (813) 929-7499

REGISTERED LANDSCAPE ARCHITECT
SARA R. ALLEN
LA 6667222
STATE OF FLORIDA
Sara R. Allen 09/25/15

Certificate Of Authorization: #27614

OFFICE: MCDONALD'S L.C.: 000-2596
ADDRESS: KROC DRIVE - OAK BROOK, ILLINOIS 60521
FLORIDA REGION

McDonald's USA, LLC

These drawings and specifications are the confidential and proprietary property of McDonald's USA, LLC and shall not be reproduced in whole or in part without the express written consent of McDonald's USA, LLC. They are prepared for the specific site in conjunction with its issue date and are not suitable for use on a different site or at a later time. Use of these drawings for reference or example on another project requires the services of properly licensed architects and engineers. Reproduction of the contract documents for reuse on another project is not authorized.

11929 US HIGHWAY 19
PORT RICHEY, FLORIDA

PLAN APPROVALS

SIGNATURE (2 REQUIRED)	DATE
REGIONAL MGR.	
CONST. MGR.	
OPERATIONS DEPT.	
REAL ESTATE DEPT.	

CO-SIGN SIGNATURES

CONTRACTOR	
OWNER	

ADAMS JOB NO.	2014.086	
STATUS	DATE	BY
DATE DRAWN	SEPT 2015	SRA
PLAN CHECKED	SEPT 2015	TDH
AS-BUILT		

LANDSCAPE DETAILS

L1.1

© Copyright 2015, Adams Engineering

FILENAME: L1.0 LANDSCAPE PLAN.dwg PLOTTED BY: Sarai Allen PLOT DATE: Tuesday, September 22, 2015 PLOT TIME: 3:27:43 PM PLOTTER: Adobe PDF FULL PATH: T:_Projects\2014\2014.086_McD_Hudson Rd\0 - Pasco FL\Drawings\03 - Production\L1.0 LANDSCAPE PLAN