Asturia

PRELIMINARY / CONSTRUCTION PLANS - PHASE 2

LOCATED IN PART OF

SECTIONS 23, 24, 25 & 26 TOWNSHIP 26 SOUTH, RANGE 17 EAST

PASCO COUNTY, FLORIDA

OWNER: SR54 LAND ASSOCIATES
605 PALENCIA CLUB DRIVE, ST. AUGUSTINE, FLORIDA 32095
PHONE: (904) 810-0500 - FAX: (904) 810-0525 - E-MAIL: sean.manson@hines.com

VICINITY MAP

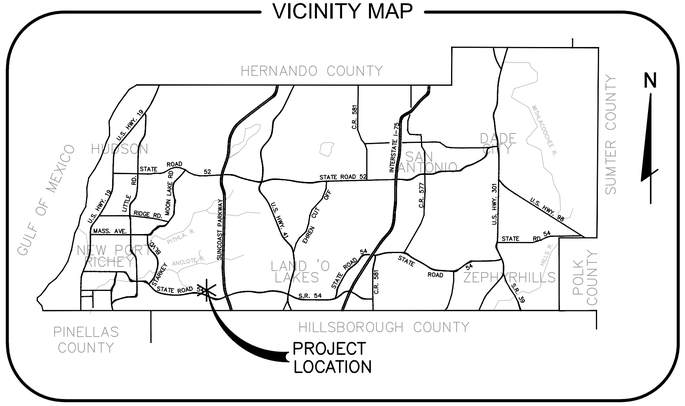

LOCATION MAP

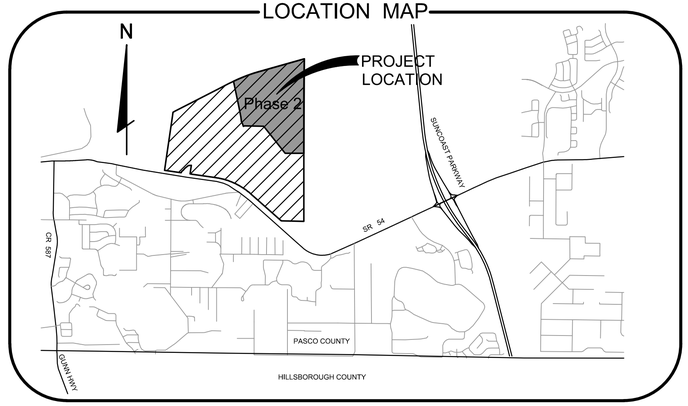

DRAWING INDEX

	1	COVER SHEET
	2-3	PRELIMINARY PLAN
	4	GENERAL NOTES
	5	TYPICAL SECTIONS AND DETAILS
	6	HORIZONTAL CONTROL PLAN
	7-8	OVERALL DRAINAGE AND STORMWATER POLLUTION PREVENTION PLAN
	9-17	PAVING, GRADING AND DRAINAGE PLANS
*	18	OVERALL UTILITY PLAN
*	19-24	UTILITY PLANS
*	25	UTILITY CONNECTION PLAN & PROFILE
	26-30	ROADWAY PROFILES
*	31-36	SIGNAGE AND PAVEMENT MARKING PLANS
	37-38	PAVING, GRADING AND DRAINAGE DETAILS
*	39-41	UTILITY DETAILS
	42-44	CRITICAL LINKAGE MITIGATION PLAN
*	45-52	LANDSCAPING PLANS & DETAILS

* SHEETS NOT INCLUDED IN SWFWMD SUBMITTAL

LEGAL DESCRIPTION

A parcel of land lying within Sections 23, 24, 25 and 26, Township 26 South, Range 17 East, Pasco County, Florida being further described as follows:

COMMENCE at the East 1/4 corner of Section 24, Township 26 South, Range 17 East, Pasco County, Florida; thence S00°12'05"W along the East Line of the Southeast 1/4 of Section 24, Township 26 South, Range 17 East (being the basis of bearings for this legal description), for 428.33 feet to the point of intersection with the Northerly line of the former Seaboard Coastline Railroad Right of Way; thence S72°52'02"W along said Northerly line of the former Seaboard Coastline Railroad Right of Way, for 3463.77 feet; thence the following three (3) courses, along a line 3,309.55 feet West of and parallel with the East line of Section 25, Township 26 South, Range 17 East, Pasco County, Florida; (1) thence leaving said Northerly line of the former Seaboard Coastline Railroad Right of Way, S00°23'37"W, for 274.78 feet to the POINT OF BEGINNING; (2) thence S00°23'37"W, for 3550.24 feet; (3) thence S00°16'14"W, for 223.42 feet; thence leaving said line 3309.55 feet West of and parallel with the East boundary of said Section 25, S89°59'49"W, for 741.53 feet; thence N38°25'56"W, for 1380.75 feet to the Northeast corner of ASTURIA PHASE 1A, as recorded in Plat Book 70, Page 142 of the Public Records of Pasco County, Florida; thence the following five (5) courses along the North line of said ASTURIA PHASE 1A; (1) thence N89°01'50"W, for 765.81 feet to the point of intersection with a non-tangent curve, concave Northerly; (2) thence Easterly along the arc of said curve, from a radial bearing of N21°07'25"W, having a radius of 1,050.00 feet, a central angle of 02°46'14", an arc length of 50.77 feet, and a chord bearing S70°15'42"W, for 50.77 feet to the point of intersection with a non-tangent line; (3) thence N18°21'11"W, for 115.00 feet; (4) thence N30°27'05"W, for 71.72 feet; (5) thence N07°12'09"W, for 210.71 feet to the most Easterly corner of ASTURIA PHASE 1B & 1C, as recorded in Plat Book 71, Page 82 of the Public Records of Pasco County, Florida; thence leaving said North line of ASTURIA PHASE 1A, N11°07'31"W, along the East line of said ASTURIA PHASE 1B & 1C, for 1394.30 feet to the Northeast corner of said ASTURIA PHASE 1B & 1C, same being the point of intersection with a non-tangent curve, concave Southerly, lying 142.00 feet South of and parallel with the Southerly line of said former Seaboard Coastline Railroad Right of Way, same also being the point of intersection with the Southerly line of that certain property as described in Official Records Book 8994, Page 1409 of the Public Records of Pasco County, Florida; thence Easterly along the arc of said curve lying 142.00 feet South of and parallel with the Southerly line of said former Seaboard Coastline Railroad Right of Way, same being said Southerly line of that certain property as described in Official Records Book 8994, Page 1409 of the Public Records of Pasco County, Florida, from a radial bearing of N26°48'08"W, having a radius of 5527.58 feet, a central angle of 09°39'05", an arc length of 931.11 feet, and a chord bearing N68°01'25"E, for 930.01 feet to the point of tangent with a line lying 142.00 feet South of and parallel with the Southerly line of said former Seaboard Coastline Railroad Right of Way, same being said Southerly line of that certain property as described in Official Records Book 8994, Page 1409 of the Public Records of Pasco County, Florida; thence N72°50'58"E, along said line lying 142.00 feet South of and parallel with the Southerly line of said former Seaboard Coastline Railroad Right of Way, same being said Southerly line of that certain property as described in Official Records Book 8994, Page 1409 of the Public Records of Pasco County, Florida, for 2034.79 feet to the POINT OF BEGINNING.

Containing 7,257,626 square feet or 166.612 acres, more or less.

811 Know what's **below.** **Call** before you dig.

FLA. STATUTE 553.851 (1979) REQUIRES A MIN. OF 2 DAYS AND A MAX. OF 5 DAYS NOTICE BEFORE YOU EXCAVATE.

SITE DATA

ASTURIA - PHASE 2

PROJECT TYPE:	157 SINGLE FAMILY LOTS
PASCO COUNTY PARCEL I.D. #'S:	26-26-17-0000-00200-0031 25-26-17-0000-00100-0021 23-26-17-0000-00200-0010 24-26-17-0000-00200-0020
EXISTING ZONING:	LEGACY MPUD #6668 APPROVED 12/2009
FUTURE LAND USE:	RES-3
CURRENT USE:	VACANT
CONSTRUCTION AREA:	67.47 ACRES
PROJECT AREA:	166.612 ACRES
WETLAND AREA:	(SEE SHEET 2, FOR WETLAND TABLE)
PROPOSED WETLAND IMPACTS:	1.68 ACRES

MITIGATION PROVIDED AS PART OF ASTURIA PHASE 1 PLAN (MITIGATION BANK)

ROADS: THE PROPOSED ROADWAYS ARE TO BE OWNED & MAINTAINED BY ASTURIA CDD AND ACCESSIBLE TO THE PUBLIC.

THE PLAN HAS BEEN CERTIFIED BY THE DESIGN ENGINEER TO BE IN SUBSTANTIAL CONFORMANCE WITH THE LATEST EDITION OF THE "MANUAL OF UNIFORM MINIMUM STANDARDS FOR DESIGN, CONSTRUCTION AND MAINTENANCE FOR STREETS AND HIGHWAYS" AS REQUIRED BY SECTION 336.045 FLORIDA STATUTES.

PAUL E. SKIDMORE LICENSE NO. 39631 STATE OF FLORIDA PROFESSIONAL ENGINEER

JOB NO.	506-100F
EPN	213
DATE	10-1-2015
DESIGNED	RAH
DRAWN	RAH
CHKD.	
APPVD	PES

REVISIONS

NO.	DATE	BY

DESIGNED FOR
ASTURIA COMMUNITY DEVELOPMENT DISTRICT
605 PALENCIA CLUB DRIVE, ST. AUGUSTINE, FLORIDA 32095
PHONE: (904) 810-0500 - FAX: (904) 810-0525 - E-MAIL: sean.manson@hines.com

PROJECT NAME: Asturia | PHASE 2

SHEET NAME: **COVER SHEET**

ENGINEER / SURVEYOR
FLORIDA DESIGN CONSULTANTS, INC.
THINK IT. ACHIEVE IT.
3030 STARKEY BOULEVARD, NEW PORT RICHEY, FLORIDA 34655
PHONE: (800) 532 - 1047 FAX: (727) 848 - 3648 WWW.FLDESIGN.COM C.A. NO. 7421
E-MAIL: pskidmore@fldesign.com

PLAN SET DATE
October 7, 2015

SHEET 1 OF 52

©Copyright 2015 Florida Design Consultants, Inc. Drawings and concepts may not be used or reproduced without written permission.

K:\213\ProData\ConstDocs\Plans\Phase 2\213_ASTURIA-PH2-RCS.dwg - Oct 20, 2015 @ 1:22pm - rhoff

MODEL CENTER LOTS

	LOTS	10% MAXIMUM	PROPOSED
PHASE 1A,1B,1C,1D	248	25	11
PHASE 2A,2B	157	16	10
PHASE 3	92	9	9
PHASE 4	171	17	17

TRACT INFORMATION

TRACT	DESIGNATION
A, B,	SIGN/LANDSCAPE/UTILITY/INGRESS/EGRESS
A–1, A–2, A–3	RIGHT–OF–WAY, INCLUDES ALLEYS*
P–3, G, H, I, J, K, L, M, N, P, Q, R, S, T, U, V, W, X, Y, AU	NEIGHBORHOOD PARK AMENITY CENTER
AA, AD, AE, AF, AG, AH, AI, AM, AP, AW, AX, Z	DRAINAGE/CONSERVATION
AV, AZ	SANITARY PUMP STATION
AN	CRITICAL LINKAGE BUFFER / PARK

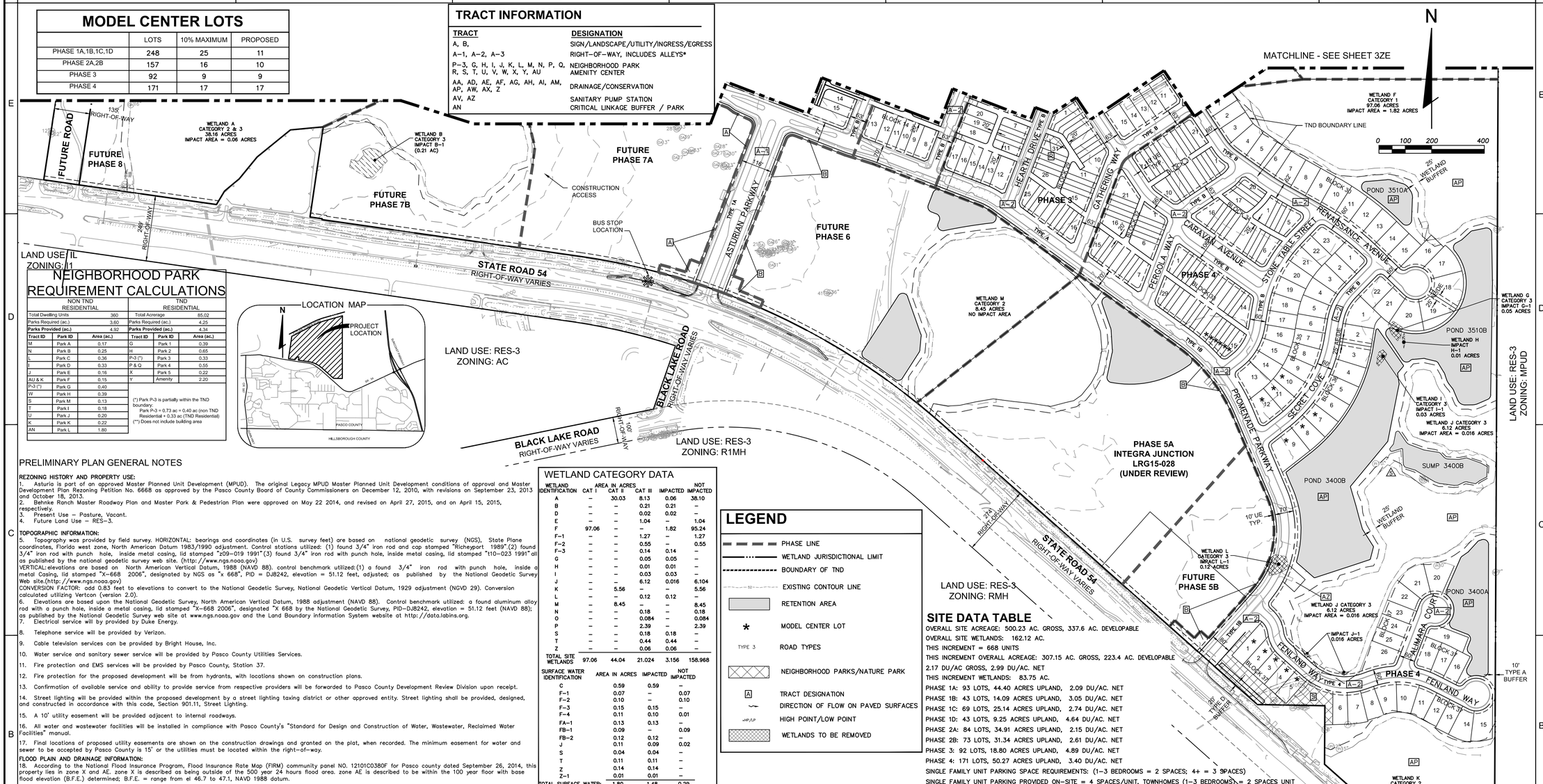

NEIGHBORHOOD PARK REQUIREMENT CALCULATIONS

LAND USE: IL
ZONING: I1

NON TND RESIDENTIAL			TND RESIDENTIAL		
Total Dwelling Units		360	Total Acreage		85.02
Parks Required (ac.)		3.60	Parks Required (ac.)		4.25
Parks Provided (ac.)		4.92	**Parks Provided (ac.)**		4.34
Tract ID	**Park ID**	**Area (ac.)**	**Tract ID**	**Park ID**	**Area (ac.)**
M	Park A	0.17	G	Park 1	0.39
N	Park B	0.25	H	Park 2	0.65
L	Park C	0.36	P-3 (*)	Park 3	0.33
L	Park D	0.33	P & Q	Park 4	0.55
J	Park E	0.16	X	Park 5	0.22
AU & K	Park F	0.15	Y	Amenity	2.20
P-3 (*)	Park G	0.40			
W	Park H	0.39			
S	Park M	0.13			
T	Park I	0.18			
U	Park J	0.20			
K	Park K	0.22			
AN	Park L	1.80			

(*) Park P-3 is partially within the TND boundary:
Park P-3 = 0.73 ac = 0.40 ac (non TND Residential) + 0.33 ac (TND Residential)
(**) Does not include building area

LOCATION MAP

PRELIMINARY PLAN GENERAL NOTES

REZONING HISTORY AND PROPERTY USE:

1. Asturia is part of an approved Master Planned Unit Development (MPUD). The original Legacy MPUD Master Planned Unit Development conditions of approval and Master Development Plan Rezoning Petition No. 6668 as approved by the Pasco County Board of County Commissioners on December 12, 2010, with revisions on September 23, 2013 and October 18, 2013.
2. Behnke Ranch Master Roadway Plan and Master Park & Pedestrian Plan were approved on May 22 2014, and revised on April 27, 2015, and on April 15, 2015, respectively.
3. Present Use – Pasture, Vacant.
4. Future Land Use – RES–3.

TOPOGRAPHIC INFORMATION:

5. Topography was provided by field survey. HORIZONTAL: bearings and coordinates (in U.S. survey feet) are based on national geodetic survey (NGS), State Plane coordinates, Florida west zone, North American Datum 1983/1990 adjustment. Control stations utilized: (1) found 3/4" iron rod and cap stamped "Richeyport 1989"(2) found 3/4" iron rod with punch hole, inside metal casing, lid stamped "z09–019 1991"(3) found 3/4" iron rod with punch hole, inside metal casing, lid stamped "t10–023 1991" all as published by the national geodetic survey web site. (http://www.ngs.noaa.gov)
VERTICAL: elevations are based on North American Vertical Datum, 1988 (NAVD 88). control benchmark utilized:(1) a found 3/4" iron rod with punch hole, inside a metal Casing, lid stamped "X–668 2006", designated by NGS as "x 668", PID = DJ8242, elevation = 51.12 feet, adjusted; as published by the National Geodetic Survey Web site.(http://www.ngs.noaa.gov)
CONVERSION FACTOR: add 0.83 feet to elevations to convert to the National Geodetic Survey, National Geodetic Vertical Datum, 1929 adjustment (NGVD 29). Conversion calculated utilizing Vertcon (version 2.0).
6. Elevations are based upon the National Geodetic Survey, North American Vertical Datum, 1988 adjustment (NAVD 88). Control benchmark utilized: a found aluminum alloy rod with a punch hole, inside a metal casing, lid stamped "X–668 2006", designated "X 668 by the National Geodetic Survey, PID–DJ8242, elevation = 51.12 feet (NAVD 88); as published by the National Geodetic Survey web site at www.ngs.noaa.gov and the Land Boundary information System website at http://data.labins.org.
7. Electrical service will by provided by Duke Energy.
8. Telephone service will be provided by Verizon.
9. Cable television services can be provided by Bright House, Inc.
10. Water service and sanitary sewer service will be provided by Pasco County Utilities Services.
11. Fire protection and EMS services will be provided by Pasco County, Station 37.
12. Fire protection for the proposed development will be from hydrants, with locations shown on construction plans.
13. Confirmation of available service and ability to provide service from respective providers will be forwarded to Pasco County Development Review Division upon receipt.
14. Street lighting will be provided within the proposed development by a street lighting taxing district or other approved entity. Street lighting shall be provided, designed, and constructed in accordance with this code, Section 901.11, Street Lighting.
15. A 10' utility easement will be provided adjacent to internal roadways.
16. All water and wastewater facilities will be installed in compliance with Pasco County's "Standard for Design and Construction of Water, Wastewater, Reclaimed Water Facilities" manual.
17. Final locations of proposed utility easements are shown on the construction drawings and granted on the plat, when recorded. The minimum easement for water and sewer to be accepted by Pasco County is 15' or the utilities must be located within the right–of–way.

FLOOD PLAIN AND DRAINAGE INFORMATION:

18. According to the National Flood Insurance Program, Flood Insurance Rate Map (FIRM) community panel NO. 12101C0380F for Pasco county dated September 26, 2014, this property lies in zone X and AE. zone X is described as being outside of the 500 year 24 hours flood area. zone AE is described to be within the 100 year floor with base flood elevation (B.F.E.) determined; B.F.E. = range from el 46.7 to 47.1, NAVD 1988 datum.
19. Stormwater management areas will be within dedicated drainage easements and tracts, they will be shown on future construction plans and granted on the plat, when recorded. On–site wetlands and buffers will be within dedicated wetland conservation/drainage/buffer easements and will be granted on plats or by separate instruments.
20. Drainage run–off (post development) will be collected and directed via pipes and swales to stormwater management areas. Stormwater management areas will discharge to the existing wetland drainage system.
21. Conservation areas, stormwater management areas, parks, buffer easements and specific landscaping tracts will be owned and maintained by a Homeowners Association or some other approved entity (i.e. C.D.D.)
22. All stormwater pipes between lots shall be in storm drainage easements, 10'–wide minimum, except for access to lakes, which will be a 15'–wide minimum easement.

ROADWAYS:

23. All proposed roadways are to be owned and maintained by the CDD and accessible to the public.
24. All roadway construction is to comply with the Manual of Uniform Minimum Standards, State of Florida, pursuant to 336.045 F.S.
25. Sidewalks are to be provided on both sides of all streets, as shown on the approved Master Bike/Pedestian Plan.

BUFFERING, LANDSCAPE CODE COMPLIANCE AND TREE PROTECTION/REPLACEMENT:

26. Development will comply with the Tree Protection and Landscaping ordinances as set forth in the Land Development Code except where relief from the Code has been provided by alternate standards or variance request.
27. No buffer shall encroach into the clear sight triangle as defined in Section 200 of the Pasco County Land Development Code.
28. Tree replacement data and landscape plan are provided as part of this plan set submittal.

HISTORIC RESOURCES:

29. No known historic resources or sites exist on the subject property and none are identified by the Pasco County Comprehensive Plan. However, **If during construction activities** any evidence of historic resources, including but not limited to aboriginal or historic pottery, prehistoric stone tools, bone or shell tools, historic trash pits, or historic building foundation, are discovered, work shall come to an immediate stop and the Florida Department of Historic Resources (State Historic Preservation Officer) and Pasco County shall be notified within two working days of the resources found on the site

DEVELOPMENT STANDARDS:

30. Residential – refer to the Typical Lot Details for all required minimum lot sizes, building setbacks, etc.
31. Phasing – general development phasing is illustrated on the preliminary plan. Multiple construction phases are anticipated. Construction may be permitted out of numerical sequence provided that the appropriate infrastructure is made available by the Developer.
32. The developer may provide sidewalks in excess of the minimum County requirements. The sidewalks, as depicted in these documents, may be constructed similar to what is depicted, but in no case shall the constructed sidewalks be less than what is required by Code.
33. The site does not lie within a hurricane excavation zone.
34. If during construction activities any evidence of the presence of State and Federally protected plant and/or animal species is discovered, work shall come to an immediate stop and Pasco County shall be notified within two working days of the plant and/or animal species found on the site

WETLAND CATEGORY DATA

WETLAND IDENTIFICATION	AREA IN ACRES CAT I	CAT II	CAT III	IMPACTED	NOT IMPACTED
A	–	30.03	8.13	0.06	38.10
B	–	–	0.21	0.21	–
D	–	–	0.02	0.02	–
E	–	–	1.04	–	1.04
F	97.06	–	–	1.82	95.24
F–1	–	–	1.27	–	1.27
F–2	–	–	0.55	–	0.55
F–3	–	–	0.14	0.14	–
G	–	–	0.05	0.05	–
H	–	–	0.01	0.01	–
I	–	–	0.03	0.03	–
J	–	–	6.12	0.016	6.104
K	–	5.56	–	–	5.56
L	–	–	0.12	0.12	–
M	–	8.45	–	–	8.45
N	–	–	0.18	–	0.18
O	–	–	0.084	–	0.084
P	–	–	2.39	–	2.39
S	–	–	0.18	0.18	–
T	–	–	0.44	0.44	–
Z	–	–	0.06	0.06	–
TOTAL SITE WETLANDS	97.06	44.04	21.024	3.156	158.968

SURFACE WATER IDENTIFICATION	AREA IN ACRES	IMPACTED	NOT IMPACTED
C	0.59	0.59	–
F–1	0.07	–	0.07
F–2	0.10	–	0.10
F–3	0.15	0.15	–
F–4	0.11	0.10	0.01
FA–1	0.13	0.13	–
FB–1	0.09	–	0.09
FB–2	0.12	0.12	–
J	0.11	0.09	0.02
S	0.04	0.04	–
T	0.11	0.11	–
Z	0.14	0.14	–
Z–1	0.01	0.01	–
TOTAL SURFACE WATER:	1.80	1.48	0.29

LEGEND

- PHASE LINE
- WETLAND JURISDICTIONAL LIMIT
- BOUNDARY OF TND
- 52 EXISTING CONTOUR LINE
- RETENTION AREA
- * MODEL CENTER LOT
- TYPE 3 ROAD TYPES
- NEIGHBORHOOD PARKS/NATURE PARK
- A TRACT DESIGNATION
- DIRECTION OF FLOW ON PAVED SURFACES
- HP/LP HIGH POINT/LOW POINT
- WETLANDS TO BE REMOVED

SITE DATA TABLE

OVERALL SITE ACREAGE: 500.23 AC. GROSS, 337.6 AC. DEVELOPABLE
OVERALL SITE WETLANDS: 162.12 AC.
THIS INCREMENT = 668 UNITS
THIS INCREMENT OVERALL ACREAGE: 307.15 AC. GROSS, 223.4 AC. DEVELOPABLE
2.17 DU/AC GROSS, 2.99 DU/AC. NET
THIS INCREMENT WETLANDS: 83.75 AC.
PHASE 1A: 93 LOTS, 44.40 ACRES UPLAND, 2.09 DU/AC. NET
PHASE 1B: 43 LOTS, 14.09 ACRES UPLAND, 3.05 DU/AC. NET
PHASE 1C: 69 LOTS, 25.14 ACRES UPLAND, 2.74 DU/AC. NET
PHASE 1D: 43 LOTS, 9.25 ACRES UPLAND, 4.64 DU/AC. NET
PHASE 2A: 84 LOTS, 34.91 ACRES UPLAND, 2.15 DU/AC. NET
PHASE 2B: 73 LOTS, 31.34 ACRES UPLAND, 2.61 DU/AC. NET
PHASE 3: 92 LOTS, 18.80 ACRES UPLAND, 4.89 DU/AC. NET
PHASE 4: 171 LOTS, 50.27 ACRES UPLAND, 3.40 DU/AC. NET
SINGLE FAMILY UNIT PARKING SPACE REQUIREMENTS: (1–3 BEDROOMS = 2 SPACES; 4+ = 3 SPACES)
SINGLE FAMILY UNIT PARKING PROVIDED ON–SITE = 4 SPACES/UNIT, TOWNHOMES (1–3 BEDROOMS) = 2 SPACES UNIT
TOTAL ON–STREET PARKING REQUIRED WITHIN TND AREA = 1 SPACE/4 UNITS = 317 UNITS x 0.25 = 79
ON–STREET PARKING PROVIDED = 115 PROVIDED

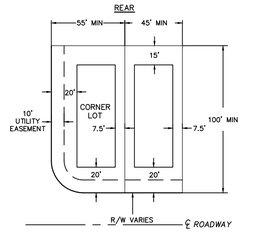

NOTE: MINIMUM LOT WIDTHS SHALL BE PROVIDED AT THE PROPOSED BUILDING PAD.

NOTE:
MAXIMUM LOT COVERAGE OF 55 PERCENT–PRINCIPAL STRUCTURE.
MAXIMUM LOT COVERAGE OF 20 PERCENT–ACCESSORY STRUCTURE.
CORNER LOTS SHALL BE 10' WIDER THAN THE MINIMUM LOT.

TYPICAL SINGLE FAMILY DETACHED LOT DETAIL (CONVENTIONAL)
NTS

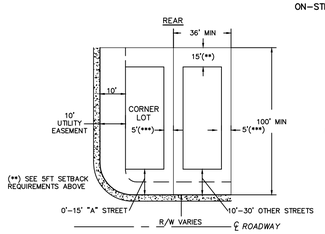

NOTE: MINIMUM LOT WIDTHS SHALL BE PROVIDED AT THE PROPOSED BUILDING PAD.

NOTE:
MAXIMUM LOT COVERAGE OF 55 PERCENT–PRINCIPAL STRUCTURE.
MAXIMUM LOT COVERAGE OF 20 PERCENT–ACCESSORY STRUCTURE.
FRONT PORCHES MAY ENCROACH INTO FRONT SETBACK 6 FT.
CORNER LOTS SHALL BE 10' WIDER THAN THE MINIMUM LOT.

TYPICAL SINGLE FAMILY DETACHED LOT DETAIL
NTS

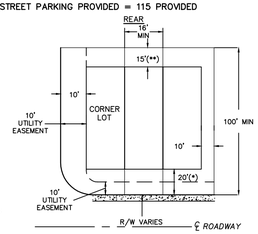

NOTE:
MAXIMUM LOT COVERAGE OF 100 PERCENT–PRINCIPAL STRUCTURE.
MINIMUM 20 FEET BUILDING SIDE SEPARATION.
THE AVERAGE DISTANCE BETWEEN STRUCTURES FOR ANY BUILDING CONTAINING MORE THAN FOUR UNITS SHALL BE 30 FEET WITH NO POINT CLOSER THAN 20 FEET.

TYPICAL TOWNHOME LOT DETAIL
NTS

(a) PRIOR TO ANY CONSTRUCTION ON THE LOT, PROPER EROSION AND SEDIMENTATION CONTROLS SHALL BE INSTALLED.

(b) LOTS THAT BACK UP TO DRAINAGE–RETENTION AREAS AND/OR WETLAND AREAS DESIGNED AND PERMITTED TO RECEIVE DISCHARGE SHALL BE "TYPE B" OR TYPE C" GRADED A MINIMUM FIFTEEN (15) FOOT WIDE DRAINAGE AND ACCESS EASEMENT SHALL BE PROVIDED ALONG ALL REAR LOT LINES WHERE THERE IS A PIPE OR SWALE. DRAINAGE AND ACCESS EASEMENTS SHALL EXTEND TO THE ROAD RIGHT–OF–WAY AT BLOCK ENDS. SIDE–YARD CROSS–ACCESS–EASEMENTS SHALL BE PROVIDED CONNECTING THE REAR–YARD EASEMENT TO THE FRONT RIGHT–OF–WAY.

(c) LOTS GRADED AS TYPE A," WHICH BACK UP TO OTHER LOTS, SHALL REQUIRE THE INSTALLATION OF GUTTERS ON THE SIDES AND BACKS CONNECTING TO ROOF LEADERS AND DISCHARGING TO THE FRONT OF THE LOT. THESE LOTS DO NOT REQUIRE A DRAINAGE EASEMENT AT THE REAR OF THE LOTS.

(d) LOTS GRADED AS "TYPE B" OR " TYPE C," WHICH BACK UP TO OTHER LOTS, SHALL REQUIRE THAT TRAFFIC–BEARING GRATES BE INSTALLED UPON A FLORIDA DEPARTMENT OF TRANSPORTATION (FDOT) INLET PLACED WITHIN EACH REAR LOT–LINE EASEMENT. CULVERTS CONNECTING REAR–YARD INLETS TO ACCEPTABLE OUTFALLS SHALL BE INSTALLED. CULVERTS SHALL BE REINFORCED CONCRETE PIPE WITH MINIMUM SEALED JOINTS DESIGNED TO SUSTAIN AN H–20 LOADING. A MINIMUM 7.5 FOOT–WIDE DRAINAGE AND ACCESS EASEMENT SHALL BE PROVIDED ALONG ALL REAR LOT FINES FOR A TOTAL OF FIFTEEN (15) FEET. DRAINAGE AND ACCESS EASEMENTS SHALL EXTEND TO THE ROAD RIGHT–OF–WAY AT BLOCK ENDS. SIDE–YARD CROSS–ACCESS–EASEMENTS SHALL BE PROVIDED CONNECTING THE REAR–YARD EASEMENT TO THE FRONT RIGHT–OF–WAY.

(e) SIDE–YARD SWALES SHALL BE SLOPED TO CREATE POSITIVE OUTFALL TO THE FRONT AND/OR REAR OF EACH LOT WITH VELOCITIES NO GREATER THAN ALLOWABLE FOR GRASSED STABILIZATION, AS IN THE FDOT DRAINAGE MANUAL.

(f) A MAINTENANCE ENTITY, OTHER THAN AND ACCEPTABLE TO THE COUNTY, SHALL BE DESIGNATED TO PROVIDE PERPETUAL MAINTENANCE TO ALL DRAINAGE AND ACCESS EASEMENTS. THE APPROVED MAINTENANCE ENTITY SHALL PROVIDE ANNUAL INSPECTIONS OF SIDE– AND REAR–YARD EASEMENTS AND DRAINAGE FACILITIES TO VERIFY THAT NO MODIFICATIONS HAVE BEEN MADE TO THE GRADING AND GROUND COVER AND TO INSPECT ANY INLETS AND PIPES TO VERIFY THAT NO FLOW RESTRICTIONS EXIST. ANY MODIFICATION OR FLOW RESTRICTION OBSERVED AT ANY TIME SHALL BE CORRECTED. ADDITIONAL INSPECTIONS SHALL BE PERFORMED IF REQUESTED BY AN ADJOINING RESIDENT OR THE COUNTY. THE MAINTENANCE ENTITY SHALL HAVE THE RIGHT TO FILE A LIEN TO CHARGE PROPERTY OWNERS FOR CORRECTIONS OR MODIFICATIONS AND COLLECT SUFFICIENT FUNDS TO PERFORM REQUIRED MAINTENANCE.

(g) GUTTERS AND ROOF STRUCTURES SHALL BE INSTALLED SO AS TO REDUCE DIRECT DISCHARGE TO THE SIDEYARD SWALES.

PAUL E. SKIDMORE
LICENSE NO. 39631
STATE OF FLORIDA
PROFESSIONAL ENGINEER

JOB NO.	EPN	DATE	DRAWN	CHK.	
506-100F	213	10-1-2015	RAH	PES	
			CALCULATED	APPVD	

REVISIONS | DATE | NO.

DESIGNED FOR
ASTURIA COMMUNITY DEVELOPMENT DISTRICT
650 PALMETTO CLUB DRIVE ST. AUGUSTINE, FLORIDA 32092
PHONE: (904) 810-0500 - FAX: (904) 810-0525 - E-MAIL: sean.brewer@dhmre.com

PROJECT NAME
Asturia | PHASE 2

SHEET NAME
PRELIMINARY PLAN (1)

FLORIDA DESIGN CONSULTANTS, INC.
— THINK IT. ACHIEVE IT. —
ENGINEER / SURVEYOR
3030 STARKEY BOULEVARD, NEW PORT RICHEY, FLORIDA 34655
PHONE: (800) 532 - 1047 FAX: (727) 848 - 3648 WWW.FLDESIGN.COM C.A. NO. 7421
E-MAIL: paskomore@fldesign.com

PLAN SET DATE
October 7, 2015

SHEET
2 OF 52

© Copyright 2015 Florida Design Consultants, Inc. Drawings and concepts may not be used or reproduced without written permission.

K:\2015\Proj Data\ConstDocs\Plans\Phase 2\2015_ASTURIA–PH2–PRELIM.dwg – Oct 20, 2015 @ 1:22pm – rhall

MODEL CENTER LOTS

	LOTS	10% MAXIMUM	PROPOSED
PHASE 1A,1B,1C,1D	248	25	11
PHASE 2A,2B	157	16	10
PHASE 3	92	9	9
PHASE 4	171	17	17

LEGEND

- PHASE LINE
- WETLAND JURISDICTIONAL LIMIT
- BOUNDARY OF TND
- 92 EXISTING CONTOUR LINE
- RETENTION AREA
- MODEL CENTER LOT
- TYPE 3 ROAD TYPES
- NEIGHBORHOOD PARKS/NATURE PARK
- A TRACT DESIGNATION
- DIRECTION OF FLOW ON PAVED SURFACES
- HIP/LP HIGH POINT/LOW POINT
- WETLANDS TO BE REMOVED

PHASING AND PRODUCT SUMMARY - PHASES 1-4

Single-Family Residential Uses	1A	1B	1C	1D	2A	2B	3	4	TOTAL
55 FOOT WIDE TND FRONT LOAD	51	0	0	6	0	0	11	4	72
45 FOOT WIDE TND ALLEY LOAD	18	0	0	23	0	0	25	0	66
36 FOOT WIDE TND ALLEY LOAD (*)	18	0	0	14	0	0	20	0	52
55 FOOT WIDE CONVENTIONAL	0	33	36	0	84	42	0	49	244
65 FOOT WIDE CONVENTIONAL	6	10	33	0	0	31	0	27	107
TOWNHOMES (**)	0	0	0	0	0	0	36	91	127
TOTAL	93	43	69	43	84	73	92	171	668

TOTAL PHASE 1	248	TOTAL PHASE 2	157
TOTAL SINGLE-FAMILY		541 UNITS	
TOTAL TOWNHOMES		127 UNITS	

SETBACKS:

SINGLE-FAMILY DETACHED:

Minimum Lot Width	45 ft*
Minimum Lot Depth	100 ft
Minimum Front-Yard Setback	20 ft
Minimum Side-Yard Setback	7.5 ft
Minimum Rear-Yard Setback	15 ft
Minimum Lot Area	5,000 sf*
Maximum Lot Coverage-Principal Structure	55%
Maximum Lot Coverage-Accessory Structure	20%

*Minimum lot width, lot area and lot setbacks may be reduced below the minimum standards set forth above provided that the lot and unit configuration and design of the single-family units proposed for such development are approved by the County. Additionally, minimum side yard setbacks may be reduced to 5 ft where there is a TND design or as otherwise approved by the County. These setbacks are subject to provisions included on the Paving, Drainage and Grading Plan Sheets.

TOWNHOMES:

Minimum Lot Width	16 ft*
Minimum Lot Depth	100 ft
Minimum Front-Yard Setback	20 ft from back of curb or sidewalk
Minimum Side-Yard Setback	0 ft for interior, 10 ft for exterior Property Lines (20 ft separation)**
Minimum Rear-Yard Setback	15 ft
Minimum Lot Area	5,000 S.F.
Maximum Lot Coverage-Principal Structure	55% – Accessory Structure 20%
Maximum Building Height	45 ft

**The average distance between structures of any building containing more than four units shall be 30 ft with no point closer than 20 ft.

TRACT INFORMATION

TRACT	DESIGNATION
A, B,	SIGN/LANDSCAPE/UTILITY/INGRESS/EGRESS
A-1, A-2, A-3	RIGHT-OF-WAY, INCLUDES ALLEYS*
P-3, G, H, I, J, K, L, M, N, P, Q, R, S, T, U, V, W, X, Y, AU	NEIGHBORHOOD PARK AMENITY CENTER
AA, AD, AE, AF, AG, AH, AI, AM, AP, AW, AX, Z	DRAINAGE/CONSERVATION
AV, AZ	SANITARY PUMP STATION
AN	CRITICAL LINKAGE BUFFER / PARK

LAND USE: CON
ZONING: AC

LAND USE: RES-3
ZONING: MPUD

LAND USE: IH
ZONING: I2

28' TAMPA BAY WATER INGRESS/EGRESS AND UTILITY ESMT ORB 6242, PG 56

32' PINELLAS COUNTY WATER TRANSMISSION MAIN ESMT PER ORB 706, PG 277 & ORB 732, PG 338

88' PERMANENT PIPELINE ESMT ORB 5464, PG 87 & ORB 7270, PG 1847

28' TAMPA BAY WATER INGRESS/EGRESS AND UTILITY EASEMENT ORB 6242, PG 56

PERMANENT PIPELINE ESMT ORB 5464, PG 87 & ORB 7270, PG 1847

FUTURE TOWER ROAD (142' RIGHT-OF-WAY PER O.R. BOOK 8994 PAGE 1489-1412)

FUTURE ROAD (RIGHT-OF-WAY TO BE DEDICATED TO PASCO COUNTY)

EXISTING

FUTURE PHASE 8

FUTURE PHASE 7A

PHASE 1A

PHASE 1B

PHASE 1C

PHASE 1D

PHASE 2A

PHASE 2B

PHASE 3

AMENITY CENTER

POND 3730A

POND 3740A

POND 3740B

POND 3740C

POND 3500A

POND 3500B

POND 3500C

POND 3500D

POND 3510C

POND H-A

POND H-B

POND J-A

WETLAND A CATEGORY 2 & 3 38.16 ACRES IMPACT AREA = 0.06 ACRES

WETLAND IMPACT A-1 0.06 ACRES

WETLAND D CATEGORY 3 IMPACT D-1 0.02 ACRES

WETLAND E CATEGORY 2 1.04 ACRES NO IMPACT AREA

WETLAND F CATEGORY 1 97.06 ACRES IMPACT AREA = 1.82 ACRES

WETLAND F-1 CATEGORY 2 1.27 ACRES NO IMPACT AREA

WETLAND F-2 CATEGORY 3 0.55 ACRES

WETLAND N CATEGORY 3 0.18 ACRES NO IMPACT AREA

WETLAND O CATEGORY 2 0.084 ACRES NO IMPACT AREA

WETLAND P CATEGORY 2 2.39 ACRES NO IMPACT AREA

WETLAND S CATEGORY 3 IMPACT AREA S-1 (0.18 AC)

WETLAND T CATEGORY 3 IMPACT AREA T-1 = 0.44 ACRES

WETLAND F CATEGORY 1 76.76 ACRES IMPACT AREA = 1.84 ACRES

WETLAND F CATEGORY 1 97.06 ACRES IMPACT AREA = 1.82 ACRES

WETLAND F CATEGORY 3 IMPACT F-4 0.14 ACRES

WETLAND Z CATEGORY 3 IMPACT Z-1 0.06 ACRES

SURFACE WATER C IMPACT C-1 (0.59 AC)

SURFACE WATER S IMPACT AREA S-1 (0.04 AC)

SURFACE WATER T IMPACT AREA T-1 (0.11 AC)

SURFACE WATER Z IMPACT AREA Z-1 (0.14 AC)

SURFACE WATER Z-1 IMPACT AREA Z-1-1 (0.01 AC)

SURFACE WATER FA-1 IMPACT FA-1-1, (0.13 AC)

SURFACE WATER F-3 DITCH IMPACT F-3-1 0.15 ACRES

SURFACE WATER F-4 DITCH IMPACT F-4 0.1 ACRES

SURFACE WATER FB-2 IMPACT AREA FB-2-1 (0.12 AC)

SURFACE WATER F-2

IMPACT F-1 0.41 ACRES

IMPACT F-2 0.28 ACRES

IMPACT F-3 0.27 ACRES

IMPACT F-5 0.1 ACRES

IMPACT F-6 0.02 ACRES

CRITICAL LINKAGE

50' CRITICAL LINKAGE BUFFER

25' WETLAND BUFFER

20' TYPE D BUFFER

45' TYPE D BUFFER

EMERGENCY ACCESS

TND BOUNDARY LINE

MATCHLINE - SEE SHEET 2

MATCHLINE - SEE SHEET 3

0 100 200 400

N

PAUL E. SKIDMORE LICENSE NO. 39631 STATE OF FLORIDA PROFESSIONAL ENGINEER

JOB NO.	EPN	DATE	DESIGNED	DRAWN	CHKD.	APPROVED
506-100F	213	10-1-2015	RAH	RAH		PES

NO.	DATE	REVISIONS

DESIGNED FOR: **ASTURIA COMMUNITY DEVELOPMENT DISTRICT**
6951 PALENCIA CLUB DRIVE, ST. AUGUSTINE, FLORIDA 32095
PHONE: (904) 810-0500 - FAX: (904) 810-0525 - E-MAIL: sean.mannen@dhnet.com

PROJECT NAME: Asturia | PHASE 2

SHEET NAME: **PRELIMINARY PLAN (2)**

ENGINEER / SURVEYOR: **FLORIDA DESIGN CONSULTANTS, INC.** — THINK IT. ACHIEVE IT.
3030 STARKEY BOULEVARD, NEW PORT RICHEY, FLORIDA 34655
PHONE: (800) 532 - 1047 FAX: (727) 848 - 3648 WWW.FLDESIGN.COM C.A. NO. 7421
E-MAIL: pskismore@fldesign.com

PLAN SET DATE: October 7, 2015

SHEET 3 OF 52

©Copyright 2015 Florida Design Consultants, Inc. Drawings and concepts may not be used or reproduced without written permission.

K:\2131\Pro Data\CoastDock\Plans\Phase 2\2131_ASTURIA-PH2-PREPLAN.dwg - Oct 20, 2015 @ 1:33pm - rhull

GENERAL NOTES

1. ALL ELEVATIONS ARE BASED ON NAVD–1988 DATUM.
2. ALL OPEN/DISTURBED AREAS TO BE SODDED. AREAS WHERE SOD IS REQUIRED SHALL BE SAND GROWN AND STAKED AS NECESSARY TO PREVENT DISPLACEMENT. SODDED SLOPES GREATER THAN A 4:1 SLOPE SHALL BE PEGGED.
3. ELECTRICAL SERVICE WILL BE PROVIDED BY DUKE ENERGY.
4. COMMUNICATION CONNECTION SERVICE WILL BE PROVIDED BY VERIZON AND BRIGHT HOUSE.
5. STREET LIGHTING WILL BE PROVIDED BY DUKE ENERGY. STREET LIGHTING SHALL BE PROVIDED, DESIGNED, AND CONSTRUCTED IN ACCORDANCE WITH THIS CODE, SECTION 901.11, STREET LIGHTING.
6. PROPOSED DRAINAGE EASEMENTS AND UTILITY EASEMENTS SHALL BE GRANTED ON THE PLAT WHEN RECORDED. PONDS SHALL BE WITHIN DRAINAGE EASEMENTS. THE WETLANDS SHALL BE WITHIN WETLAND CONSERVATION AREAS.
7. THE SITE IS LOCATED WITHIN FLOOD ZONES "X" AND "AE" . FIRST FLOOR ELEVATIONS SHALL BE AT OR ABOVE THE 100–YEAR FLOOD ELEVATION (REFERENCE: FLOOD INSURANCE RATE MAP PANEL NOS. 12101C0380F AND 12101C0383F, REVISED SEPTEMBER 26, 2014.
8. CONSERVATION AREAS, DETENTION PONDS AND BUFFER EASEMENTS SHALL BE OWNED AND MAINTAINED BY A HOME OWNERS ASSOCIATION, COMMUNITY DEVELOPMENT DISTRICT OR SOME OTHER APPROVED ENTITY OTHER THAN PASCO COUNTY.
9. THE CONTRACTOR SHALL NOT ENTER UPON OR IN ANY WAY ALTER ANY WETLAND AREAS, EXCEPT AS AUTHORIZED BY THE APPROPRIATE ENVIRONMENTAL PERMIT. ALL WORK IN THE VICINITY OF OPEN WATER OR WETLANDS SHALL BE PERFORMED IN COMPLIANCE WITH ANY AND ALL PERMITS.
10. ALL TREES WITHIN PROPOSED INGRESS/EGRESS EASEMENT, RIGHT OF WAYS AND DRAINAGE EASEMENTS MAY BE REMOVED.
11. THE CONTRACTOR SHALL EXERCISE EXTREME CAUTION IN THE VICINITY OF TREES TO REMAIN AND IS RESPONSIBLE FOR ANY DAMAGE RESULTING FROM HIS WORK.
12. BURN AREAS, IF PERMITTABLE, SHALL BE LIMITED TO PROPOSED PONDS AS DIRECTED BY THE OWNER OR HIS AUTHORIZED REPRESENTATIVE. CONTRACTOR SHALL BE RESPONSIBLE FOR ACQUIRING AND BEING IN COMPLIANCE WITH THE APPROPRIATE BURN PERMIT(S).
13. EXCESS FILL MATERIAL IF ANY WILL BE STOCKPILED IN FUTURE PHASES, OUTSIDE OF WETLANDS AND WETLAND BUFFERS, AND WITH APPROPRIATE EROSION CONTROL.
14. NO BUFFER SHALL ENCROACH INTO THE CLEAR SITE TRIANGLE, AS DEFINED IN SECTION 200 OF THE PASCO COUNTY LAND DEVELOPMENT CODE, SO AS TO BLOCK CLEAR SITE VISIBILITY. ALL CLEAR–SITE AREAS SHALL BE KEPT FREE OF ANY SIGNAGE, PLANTINGS, TREES, ETC. IN EXCESS OF THREE–AND–A–HALF (3 1/2) FEET IN HEIGHT.
15. THE LOCATION OF EXISTING UTILITIES ARE APPROXIMATE AS SHOWN AND IT IS THE CONTRACTOR'S RESPONSIBILITY TO DETERMINE THE EXACT LOCATION OF THE UTILITIES PRIOR TO CONSTRUCTION IN THEIR VICINITY. THE CONTRACTOR SHALL NOTIFY ALL CONCERNED PUBLIC AGENCIES AND UTILITY COMPANIES IN THE AREA BEFORE BEGINNING CONSTRUCTION, INCLUDING "SUNSHINE" AT 811.
16. PRIOR TO BEGINNING WORK, THE CONTRACTOR SHALL EXPOSE ALL EXISTING UTILITIES TO BE EXTENDED, CONNECTED TO, OR CROSSED FOR VERIFICATION OF THEIR LOCATION AND ELEVATION. ANY CONFLICTS SHALL BE BROUGHT TO THE ENGINEERS ATTENTION AND BE SATISFACTORILY RESOLVED BY THE CONTRACTOR.
17. IN ACCORDANCE WITH SECTION 905.2.6.B.3 OF THE PASCO COUNTY LAND DEVELOPMENT CODE, DRAINAGE AREAS THAT ABUT ROAD RIGHT–OF–WAYS SHALL BE PLANTED WITH TREES SELECTED FROM THE TAMPA BAY AREA TREE LIST AT A RATE OF(1) ONE TREE PER (50) FIFTY LINEAR FEET OF POND BANK. TREES MAY BE PLANTED IN GROUPS IN ACCORDANCE WITH THE APPROVED TREE PLAN.
18. IF DURING CONSTRUCTION ACTIVITIES, ANY EVIDENCE OF HISTORIC RESOURCES, INCLUDING, BUT NOT LIMITED TO, ABORIGINAL OR HISTORIC POTTERY, PREHISTORIC STONE TOOLS, BONE OR SHELL TOOLS, HISTORIC TRASH PITS, OR HISTORIC BUILDING FOUNDATIONS ARE DISCOVERED, WORK SHALL COME TO AN IMMEDIATE STOP AND THE FLORIDA DEPARTMENT OF HISTORIC RESOURCES (STATE HISTORIC PRESERVATION OFFICER) AND PASCO COUNTY SHALL BE NOTIFIED WITHIN TWO WORKING DAYS OF THE RESOURCES BEING FOUND ON THE SITE.
19. ALL ROADS WITHIN THIS SUBDIVISION WILL BE MAINTAINED BY A COMMUNITY DEVELOPMENT DISTRICT (CDD). THE ROADWAY DESIGN SPEED OF THIS PROJECT IS AS NOTED ON THE TYPICAL SECTION.
20. IF, DURING CONSTRUCTION ACTIVITIES, ANY EVIDENCE OF STATE AND FEDERALLY PROTECTED PLANT AND/OR ANIMAL SPECIES, OTHER THAN THOSE SUBJECT TO ALREADY ISSUED PERMITS, ARE DISCOVERED, WORK SHALL COME TO AN IMMEDIATE STOP, AND PASCO COUNTY SHALL BE NOTIFIED WITHIN TWO WORKING DAYS OF THE PLANT AND/OR ANIMAL SPECIES BEING FOUND.
21. ALL PROPOSED SIGNS MUST BE APPLIED FOR, APPROVED, AND PERMITTED ON AN INDIVIDUAL BASIS APART FROM ANY ULTIMATELY–APPROVED SITE PLAN. APPROVAL OF THIS SITE PLAN DOES NOT CONSTITUTE APPROVAL OF ANY SIGNAGE.
22. THE ARCHITECT/ENGINEER CERTIFIES THAT THE SITE HAS BEEN DESIGNED IN ACCORDANCE WITH THE AMERICANS WITH DISABILITIES ACT.
23. NO IRRIGATION SYSTEM OR LANDSCAPING SHALL BE INSTALLED IN ANY COUNTY OR STATE RIGHT–OF–WAY WITHOUT ISSUANCE OF APPROPRIATE RIGHT–OF–WAY USE PERMIT.
24. THE OWNER/DEVELOPER ACKNOWLEDGES THAT THE SITE AND ITS SUBSEQUENT BUILDING PERMITS SHALL COMPLY WITH ALL REZONING/MPUD CONDITIONS.
25. ALL STRUCTURES, INCLUDING BUFFER WALLS, RETAINING WALLS, SIGNAGE, ETC. REQUIRE SEPARATE BUILDING PERMITS.
26. THE CONTRACTOR SHALL CHECK PLANS FOR CONFLICTS AND DISCREPANCIES PRIOR TO CONSTRUCTION. THE CONTRACTOR SHALL NOTIFY THE OWNER'S ENGINEER OF ANY CONFLICT BEFORE PERFORMING ANY WORK IN THE AFFECTED AREA.
27. THE CONTRACTOR IS RESPONSIBLE FOR REPAIRING ANY DAMAGE TO EXISTING FACILITIES, ABOVE OR BELOW GROUND, THAT MAY OCCUR AS A RESULT OF THE WORK PERFORMED BY THE CONTRACTOR CALLED FOR IN CONTRACT.
28. IT IS THE CONTRACTOR'S RESPONSIBILITY TO BECOME FAMILIAR WITH THE PERMIT AND INSPECTION REQUIREMENTS OF THE VARIOUS GOVERNMENTAL AGENCIES. THE CONTRACTOR SHALL OBTAIN ALL NECESSARY PERMITS PRIOR TO CONSTRUCTION, AND SCHEDULE INSPECTIONS ACCORDING TO AGENCY INSTRUCTION.
29. ALL WORK PERFORMED SHALL COMPLY WITH THE REGULATIONS AND ORDINANCES OF THE VARIOUS GOVERNMENTAL AGENCIES HAVING JURISDICTION OVER THE WORK.
30. CONTRACTOR SHALL SUBMIT FOR REVIEW TO THE OWNER'S ENGINEER SHOP DRAWINGS ON ALL PRECAST AND MANUFACTURED ITEMS. FAILURE TO OBTAIN ENGINEERS COMMENTS BEFORE INSTALLATION MAY RESULT IN REMOVAL AND REPLACEMENT AT CONTRACTOR'S EXPENSE.
31. REPAIR AND REPLACEMENT OF ALL PRIVATE AND PUBLIC PROPERTY AFFECTED BY THIS WORK SHALL BE RESTORED TO A CONDITION EQUAL TO OR BETTER THAN EXISTING CONDITIONS UNLESS SPECIFICALLY EXEMPTED BY THE PLANS.
32. CONTRACTOR SHALL VERIFY THE LENGTHS OF ALL PIPE PRIOR TO BIDDING AND INSTALLATION. NO EXTRAS WILL BE APPROVED FOR ADDITIONAL PIPE LUMP SUM CONTRACTS EXCEPT AS A RESULT FROM PLAN CHANGES.
33. ADJUSTMENTS OF INLETS, JUNCTION BOXES, MANHOLE TOPS, WATER VALVES, WATER METERS, ETC. SHALL BE INCLUDED IN THE CONTRACTOR'S BID AND NO CLAIM SHALL BE MADE AGAINST THE OWNER OR ENGINEER FOR THESE ADJUSTMENTS, IF REQUIRED.
34. IT WILL BE NECESSARY TO EXAMINE, COORDINATE AND ADJUST ACCORDINGLY THE PROPOSED LOCATIONS OF THE VARIOUS COMPONENTS OF THE SITE UTILITIES. IT SHALL BE THE RESPONSIBILITY OF THE CONTRACTOR TO SUBMIT COORDINATION DRAWINGS SHOWING PIPE SIZES, STRUCTURES, AND ELEVATIONS. THE CONTRACTOR SHALL BE RESPONSIBLE FOR THE SCHEDULING AND COORDINATION OF THE ALL UNDERGROUND WORK ASSOCIATED WITH THIS PROJECT.
35. UPON COMPLETION OF THE LAND DEVELOPMENT CONSTRUCTION, A PROFESSIONAL ENGINEER SHALL PROVIDE A CERTIFICATION TO PASCO COUNTY THAT THE PROJECT, INCLUDING EACH PAD AREA, COMPLIES WITH THE RECOMMENDATIONS OF THE GEOTECHNICAL/GEOLOGICAL ENGINEERING REPORT.

PASCO COUNTY DEVELOPMENT REVIEW – STANDARD SITE PLAN NOTES

1. ALL UTILITY CONSTRUCTION SHALL COMPLY WITH THE PASCO COUNTY STANDARDS FOR DESIGN AND CONSTRUCTION OF WATER AND WASTEWATER FACILITIES SPECIFICATIONS, LATEST EDITION.
2. ALL ON–SITE WATER AND SEWER FACILITIES SHALL BE OWNED AND MAINTAINED BY THE PASCO COUNTY.
3. INSTALLATION OF FUEL STORAGE TANKS REQUIRES REVIEW AND APPROVAL BY THE FIRE MARSHAL AND THE ISSUANCE OF A SEPARATE BUILDING PERMIT. APPROVAL OF THE SITE PLAN DOES NOT CONSTITUTE APPROVAL OF THE LOCATION OF THE FUEL TANKS.
4. HANDICAP PARKING SPACES WILL BE PROPERLY SIGNED AND STRIPED IN ACCORDANCE WITH FLORIDA STATUTE 316, THE MANUAL OF UNIFORM TRAFFIC CONTROL DEVICES, OR OTHER APPLICABLE STANDARDS.
5. ALL ON–SITE PARKING SPACES WILL BE STRIPED AND SIGNED IN ACCORDANCE WITH THE MANUAL ON UNIFORM TRAFFIC CONTROL DEVICES, LATEST EDITION. PARKING SPACES, DIRECTIONAL ARROWS, AND STOP BARS SHALL BE STRIPED IN WHITE. IT SHALL BE THE OWNER/DEVELOPER'S RESPONSIBILITY TO PROPERLY SIGN AND STRIPE IN ACCORDANCE WITH APPLICABLE STANDARDS.
6. THE OWNER/DEVELOPER ACKNOWLEDGES THAT THIS APPROVAL DOES NOT INCLUDE ANY WORK IN THE COUNTY RIGHT–OF–WAY. ALL RIGHT–OF–WAY WORK SHALL BE A FUNCTION OF AN APPROVED PASCO RIGHT–OF–WAY USE PERMIT.

SAFETY

1. DURING THE CONSTRUCTION AND MAINTENANCE OF THIS PROJECT, ALL SAFETY REGULATIONS ARE TO BE ENFORCED. THE CONTRACTOR OR HIS HIS REPRESENTATIVE SHALL BE RESPONSIBLE FOR THE CONTROL AND SAFETY OF THE TRAVELING PUBLIC AND THE SAFETY OF HIS PERSONNEL.
2. THE CONTRACTOR SHALL BE RESPONSIBLE FOR PROTECTING EXCAVATIONS AGAINST COLLAPSE AND WILL PROVIDE BRACING, SHEETING OR SHORING AS NECESSARY. DEWATERING TRENCHES SHALL BE KEPT DRY WHILE PIPE AND APPURTENANCES ARE BEING PLACED.
3. LABOR SAFETY REGULATIONS SHALL CONFORM TO THE PROVISIONS SET FORTH BY OSHA IN THE FEDERAL REGISTER OF THE DEPARTMENT OF TRANSPORTATION.
4. CONTRACTOR SHALL PROVIDE AND MAINTAIN ITS OWN SAFETY EQUIPMENT IN ACCORDANCE WITH ITS HEALTH & SAFETY PROGRAM AND ALL OTHER APPLICABLE LEGAL AND HEALTH AND SAFETY REQUIREMENTS. THE CONTRACTOR IS ALSO RESPONSIBLE FOR PROVIDING ITS EMPLOYEES AND SUB CONTRACTORS WITH ADEQUATE INFORMATION AND TRAINING TO ENSURE THAT ALL EMPLOYEES AND SUB CONTRACTORS AND SUB CONTRACTOR'S EMPLOYEES COMPLY WITH ALL APPLICABLE REQUIREMENTS. CONTRACTOR SHALL REMAIN IN COMPLIANCE WITH ALL OCCUPATION SAFETY AND HEALTH REGULATIONS AS WELL AS THE ENVIRONMENTAL PROTECTION LAWS. THE FOLLOWING IS NOT TO BE PERCEIVED AS THE ENTIRE SAFETY PROGRAM BUT JUST BASIC REQUIREMENTS.
5. ALL EXCAVATIONS BY THE CONTRACTOR SHALL CONFORM TO THE REQUIREMENTS OF THE DEPARTMENT OF LABOR'S OCCUPATIONAL SAFETY AND HEALTH ADMINISTRATION RULES AND REGULATIONS. PARTICULAR ATTENTION MUST BE PAID TO THE CONSTRUCTION STANDARDS FOR EXCAVATIONS, 29 CFR PART 1926, SUBPART P.
6. THE MINIMUM STANDARDS AS SET FORTH IN THE CURRENT EDITION OF "THE STATE OF FLORIDA, MANUAL ON TRAFFIC CONTROL AND SAFE PRACTICES FOR STREET AND HIGHWAY CONSTRUCTION, MAINTENANCE AND UTILITY OPERATIONS" SHALL BE FOLLOWED IN THE DESIGN APPLICATION, INSTALLATION, MAINTENANCE AND REMOVAL OF ALL TRAFFIC CONTROL DEVICES, WARNING DEVICES AND BARRIERS NECESSARY TO PROTECT THE PUBLIC AND WORKMEN FROM HAZARDS WITHIN THE PROJECT LIMITS.
7. ALL TRAFFIC CONTROL MARKINGS AND DEVICES SHALL CONFORM TO THE PROVISIONS SET FORTH IN THE MANUAL ON UNIFORM TRAFFIC CONTROL DEVICES PREPARED BY THE U.S. DEPARTMENT OF TRANSPORTATION FEDERAL HIGHWAY ADMINISTRATION.
8. IT SHALL BE THE SOLE RESPONSIBILITY OF THE CONTRACTOR TO COMPLY AND ENFORCE ALL APPLICABLE SAFETY REGULATIONS. THE ABOVE INFORMATION HAS BEEN PROVIDED FOR THE CONTRACTOR'S INFORMATION ONLY AND DOES NOT IMPLY THAT THE OWNER OR ENGINEER WILL INSPECT AND/OR ENFORCE SAFETY REGULATIONS.
9. THE CONTRACTOR SHALL EXERCISE EXTREME CAUTION IN AREAS OF BURIED UTILITIES AND SHALL PROVIDE AT LEAST 48 HOURS NOTICE TO THE UTILITY COMPANIES PRIOR TO CONSTRUCTION TO OBTAIN FIELD LOCATIONS OF EXISTING UNDERGROUND UTILITIES. CALL SUNSHINE ONE AT 811.
10. THE CONTRACTOR'S MAINTENANCE OF TRAFFIC PLAN MUST BE SUBMITTED TO AND APPROVED BY, THE APPROPRIATE GOVERNMENTAL AGENCIES PRIOR TO BEGINNING ANY CONSTRUCTION.

EROSION/TURBIDITY CONTROL

1. ALL COSTS ASSOCIATED WITH ADDITIONAL TURBIDITY EROSION CONTROL ARE INCIDENTAL TO THE DEWATERING COSTS OR THE ITEM THAT REQUIRES THE DEWATERING.
2. THE CONTRACTOR SHALL BE RESPONSIBLE FOR REQUIREMENTS CONTAINED IN NPDES EROSION AND SEDIMENTATION CONTROLS INCLUDING ALL REPORTING AND MAINTENANCE REQUIREMENTS UNTIL SUCH TIME AS THE PROJECT INFRASTRUCTURE IS ACCEPTED BY THE COUNTY.
3. THE INSTALLATION OF TEMPORARY EROSION CONTROL BARRIERS SHALL BE COORDINATED WITH THE CONSTRUCTION OF THE PERMANENT EROSION CONTROL FEATURES TO THE EXTENT NECESSARY TO ASSURE ECONOMICAL, EFFECTIVE AND CONTINUOUS CONTROL OF EROSION AND WATER POLLUTION THROUGHOUT THE LIFE OF THE CONSTRUCTION PHASE.
4. THE TYPE OF EROSION CONTROL BARRIERS USED SHALL BE GOVERNED BY THE NATURE OF THE CONSTRUCTION OPERATION AND SOIL TYPE THAT WILL BE EXPOSED. SILTY AND CLAYEY MATERIAL USUALLY REQUIRE SOLID SEDIMENT BARRIERS TO PREVENT TURBID WATER DISCHARGE, WHILE SANDY MATERIAL MAY NEED ONLY SILT SCREENS OR HAY BALES TO PREVENT EROSION. FLOATING TURBIDITY CURTAINS SHALL BE USED IN OPEN WATER SITUATIONS. DIVERSION DITCHES OR SWALES MAY BE REQUIRED TO PREVENT TURBID STORMWATER RUNOFF FROM BEING DISCHARGED TO WETLANDS OR OTHER WATER BODIES. IT MAY BE NECESSARY TO EMPLOY A COMBINATION OF BARRIERS, DITCHES AND OTHER EROSION/TURBIDITY CONTROL MEASURES IF CONDITIONS WARRANT.
5. CONSTRUCTION OPERATIONS IN OR ADJACENT TO WETLANDS SHALL BE RESTRICTED TO THOSE AREAS IDENTIFIED IN THE PLANS AND IN THE SPECIFICATIONS.
6. EXCEPT AS NECESSARY FOR CONSTRUCTION, EXCAVATED MATERIAL SHALL NOT BE DEPOSITED IN THE WETLANDS OR IN A POSITION CLOSE ENOUGH THERETO TO BE WASHED AWAY BY HIGH WATER OR RUNOFF.
7. WHERE PUMPS ARE TO BE USED TO REMOVE TURBID WATERS FROM CONSTRUCTION AREAS, THE WATER SHALL BE TREATED PRIOR TO DISCHARGE TO THE WETLANDS. TREATMENT METHODS INCLUDE AND ARE NOT LIMITED TO, TURBID WATER BEING PUMPED INTO GRASSED SWALES OR APPROPRIATE VEGETATED AREAS, SEDIMENT BASINS, OR CONFINED BY AN APPROPRIATE ENCLOSURE SUCH AS TURBIDITY BARRIERS, AND KEPT CONFINED UNTIL ITS TURBIDITY LEVEL MEETS STATE WATER QUALITY STANDARDS.
8. THE CONTRACTOR SHALL SCHEDULE HIS OPERATIONS SUCH THAT THE AREA OF UNPROTECTED ERODIBLE EARTH EXPOSED AT ANY ONE TIME IS NOT LARGER THAN THE MINIMUM AREA NECESSARY FOR EFFICIENT CONSTRUCTION OPERATIONS, AND THE DURATION OF EXPOSED, UNCOMPLETED CONSTRUCTION TO THE ELEMENTS SHALL BE AS SHORT AS PRACTICABLE. CLEARING AND GRUBBING SHALL BE SO SCHEDULED AND PERFORMED THAT GRADING OPERATIONS CAN FOLLOW IMMEDIATELY THEREAFTER, AND GRADING OPERATIONS SHALL BE SCHEDULED AND PERFORMED THAT PERMANENT EROSION CONTROL FEATURES CAN FOLLOW IMMEDIATELY THEREAFTER IF CONDITIONS ON THE PROJECT PERMIT.
9. THE CONTRACTOR AND/OR OWNER'S REPRESENTATIVE SHALL PROVIDE ROUTINE MAINTENANCE OF PERMANENT AND TEMPORARY EROSION CONTROL FEATURES UNTIL THE PROJECT IS COMPLETE AND ALL BARED SOILS ARE STABILIZED.
10. THE CONTRACTOR SHALL CONTROL ALL FUGITIVE DUST ORIGINATING ON THIS PROJECT BY WATERING OR OTHER METHODS AS APPROVED BY THE OWNER OR HIS AUTHORIZED REPRESENTATIVE.
11. ALL PRACTICABLE AND NECESSARY EFFORT, INCLUDING BUT NOT LIMITED TO THE USE OF STAKED HAY BALES OR STAKED SILT SCREEN BARRIERS, SHALL BE TAKEN DURING CONSTRUCTION TO CONTROL AND PREVENT EROSION AND TRANSPORT OF SEDIMENT MATERIALS TO INLETS, SURFACE DRAINS, WETLANDS AND POND AREAS. STAKED HAY BALES AND STAKED SILT SCREEN BARRIERS SHALL BE INSTALLED PRIOR TO AND MAINTAINED THROUGH CONSTRUCTION COMPLETENESS. THE CONTRACTOR SHALL BE RESPONSIBLE FOR ALL RESTORATION EFFORTS THAT MAY BE REQUIRED.
12. THE CONTRACTOR SHALL RETAIN ALL EFFLUENT FROM DEWATERING ACTIVITIES ON–SITE WITHIN ISOLATED PONDS OR WETLANDS. NO WATER FROM DEWATERING ACTIVITIES SHALL BE PERMITTED TO LEAVE THE SITE WITHOUT PRIOR WRITTEN APPROVAL FROM SWFWMD. ALL WATER FROM DEWATERING ACTIVITIES SHALL PASS THROUGH DEWATERING BAGS (EQUIVALENT TO ULTRA DEWATERING BAGS AS PRODUCED BY ULTRA TECH INTERNATIONAL, INC.) OR APPROVED ALTERNATE.

CLEARING AND SITE PREPARATION NOTES

1. PRIOR TO THE START OF THE CLEARING AND GRUBBING, OR ANY SOIL DISTURBANCE CONTACT PASCO COUNTY STORMWATER MANAGEMENT AT (727) 834–3611 FOR SOIL EROSION AND SEDIMENT CONTROL, PRE–INSPECTION MEETING.
2. PRIOR TO ANY SITE CLEARING, ALL TREES SHOWN TO REMAIN ON THE CONSTRUCTION PLANS SHALL BE PROTECTED IN ACCORDANCE WITH THE LOCAL REGULATORY AGENCY'S TREE ORDINANCE AND DETAILS CONTAINED IN THESE PLANS. IT SHALL BE THE CONTRACTOR'S RESPONSIBILITY TO MAINTAIN THESE TREES IN GOOD CONDITION
3. CONTRACTOR SHALL CLEAR AND GRUB ONLY THOSE PORTIONS OF THE SITE NECESSARY FOR CONSTRUCTION. DISTURBED AREAS WILL BE SEEDED, MULCHED, OR PLANTED WITH OTHER APPROVED LANDSCAPE MATERIAL IMMEDIATELY FOLLOWING CONSTRUCTION.
4. ALL CONSTRUCTION DEBRIS AND OTHER WASTE MATERIAL SHALL BE DISPOSED OF OFF–SITE IN ACCORDANCE WITH APPLICABLE REGULATIONS.
5. THE LOCATION OF ALL EXISTING UTILITIES SHOWN ON THE PLANS HAVE BEEN DETERMINED FROM THE BEST INFORMATION AVAILABLE AND ARE GIVEN FOR THE CONVENIENCE OF THE CONTRACTOR/SUBCONTRACTOR. THE ENGINEER ASSUMES NO RESPONSIBILITY FOR ACCURACY PRIOR TO THE START OF ANY CONSTRUCTION ACTIVITY. IT SHALL BE THE CONTRACTOR'S/SUBCONTRACTOR'S RESPONSIBILITY TO NOTIFY THE VARIOUS UTILITIES AND TO MAKE THE NECESSARY ARRANGEMENTS FOR ANY RELOCATION OF THESE UTILITIES WITH THE OWNER OF THE UTILITY. THE CONTRACTOR/SUBCONTRACTOR SHALL EXERCISE CAUTION WHEN CROSSING ANY UNDERGROUND UTILITY, WHETHER SHOWN ON THE PLANS OR LOCATED BY THE UTILITY COMPANY. ALL UTILITIES WHICH INTERFERE WITH THE PROPOSED CONSTRUCTION SHALL BE RELOCATED BY THE RESPECTIVE UTILITY COMPANIES AND THE CONTRACTOR/SUBCONTRACTOR SHALL COOPERATE WITH THE UTILITY COMPANIES DURING RELOCATION OPERATIONS. ANY DELAY OR INCONVENIENCE CAUSED TO THE CONTRACTOR/SUBCONTRACTOR BY THE VARIOUS UTILITIES SHALL BE INCIDENTAL TO THE CONTRACT AND NO EXTRA COMPENSATION WILL BE ALLOWED.
6. ALL TREE ROOTS EXISTING WITHIN APPROVED AREAS AND ORIGINATING FROM A PROTECTED TREE, SHALL BE SEVERED CLEAN AT THE LIMITS OF THE PRESERVED AREA AS SHOWN ON THE TREE REMOVAL PLAN.
7. ALL TRIMMING UNDERTAKEN ON A TREE PROTECTED BY THE PROVISIONS OF THE LAND DEVELOPMENT CODE SHALL BE PRUNED IN ACCORDANCE WITH THE NATIONAL ARBORIST ASSOCIATION (NAA) PRUNING STANDARDS.
8. NO GRADE CHANGES SHOULD OCCUR WITHIN THE DRIP LINE OF TREES TO REMAIN.
9. ALL TREES TO REMAIN MUST BE PROTECTED BY TREE PROTECTION BARRICADES MEETING THE MINIMUM CODE STANDARDS. PROTECTIVE BARRICADES SHALL REMAIN IN PLACE UNTIL LAND ALTERATION AND CONSTRUCTION ACTIVITIES ARE COMPLETED.
10. DURING LAND ALTERATION AND CONSTRUCTION ACTIVITIES, THE CONTRACTOR SHALL NOT REMOVE VEGETATION BY GRUBBING OR TO PLACE SOIL DEPOSITS, DEBRIS, SOLVENTS, CONSTRUCTION MATERIAL, MACHINERY OR OTHER EQUIPMENT OF ANY KIND WITHIN THE DRIP LINE OF A TREE TO REMAIN ON THE SITE UNLESS OTHERWISE APPROVED BY THE COUNTY.
11. CONTRACTOR IS TO PROVIDE EROSION CONTROL/SEDIMENTATION BARRIER (HAY BALES OR SILTATION CURTAIN) TO PREVENT SILTATION OF ADJACENT PROPERTY, STREETS, STORM SEWERS, WATERWAYS, AND EXISTING WETLANDS. IN ADDITION, CONTRACTOR SHALL PLACE STRAW MULCH, OR OTHER SUITABLE MATERIAL ON GROUND IN AREAS WHERE CONSTRUCTION RELATED TRAFFIC IS TO ENTER AND EXIT THE SITE. IF, IN THE OPINION OF THE ENGINEER AND / OR LOCAL AUTHORITIES, EXCESSIVE QUANTITIES OF EARTH ARE TRANSPORTED OFF–SITE EITHER BY NATURAL DRAINAGE OR BY VEHICULAR TRAFFIC, THE CONTRACTOR IS TO REMOVE SAID EARTH TO THE SATISFACTION OF THE ENGINEER AND/OR AUTHORITIES.

SANITARY SEWER AND WATER DISTRIBUTION NOTES

1. ALL SEWER AND WATER PIPE MATERIAL AND INSTALLATIONS SHALL BE IN ACCORDANCE WITH THE PASCO COUNTY "STANDARDS FOR DESIGN AND CONSTRUCTION OF WATER, WASTEWATER, AND RECLAIMED WATER FACILITIES", LATEST EDITION. SANITARY SEWER PIPE SHALL BE PVC (SDR–35) UP TO DEPTHS OF 12 FEET, DEPTHS BETWEEN 12 FEET AND 18 FEET SHALL BE PVC (SDR–26) AND DEPTHS EXCEEDING 18 FEET SHALL BE PVC (C–900). ALL SANITARY SEWER SHALL BE COLORED GREEN. WATER PIPE 2" THROUGH 3" SHALL BE PVC (SDR–21) AND 4" THROUGH 12" SHALL BE PVC AWWA C–900, DR–18. ALL WATER PIPE SHALL BE COLORED BLUE.
2. ALL SANITARY SEWER AND POTABLE WATER SERVICE LATERALS SHALL BE MARKED WITH PAINT ON THE EDGE OF PAVEMENT AND WITH WOOD STAKES AT THE END OF SERVICE LATERALS (BLUE PAINT FOR WATER AND GREEN PAINT FOR SEWER) OR SOME OTHER APPROVED METHOD.
3. CONFLICTS OF WATER LINES WITH SANITARY SEWER AND STORM SEWER SYSTEMS SHALL BE RESOLVED BY ADJUSTING WATER LINES AS NECESSARY.
4. POTABLE WATER LINE AND SANITARY SEWER LINES SHALL HAVE A MINIMUM OF 36–INCHES OF COVER FROM PROPOSED GRADE. (UNLESS APPROVED IN WRITING BY THE PROJECT ENGINEER).
5. APPROXIMATE POTABLE WATER LINE DISTANCES ARE SHOWN BETWEEN CENTERS OF MAIN FITTINGS. THE CONTRACTOR SHALL PROVIDE ALL FITTINGS REQUIRED FOR COMPLETE SYSTEMS IN ACCORDANCE WITH GOOD CONSTRUCTION PRACTICES.
6. ALL WATER MAINS SHALL MAINTAIN A MINIMUM HORIZONTAL SEPARATION OF 10 FEET FROM ALL SANITARY SEWER, STORM SEWER AND FORCEMAINS. THE DISTANCE SHALL BE MEASURED EDGE TO EDGE. A MINIMUM VERTICAL SEPARATION OF 18 INCHES SHALL BE MAINTAINED BETWEEN THE INVERT OF THE UPPER PIPE AND THE CROWN OF THE LOWER PIPE.
7. ALL WATER LINE PIPE JOINTS SHALL BE A MINIMUM OF 10 FEET FROM THE CENTERLINE OF ANY STORM SEWER STRUCTURE (MANHOLES, INLETS OR CATCH BASINS).
8. SEWAGE DISPOSAL SHALL BE PROVIDED BY PASCO COUNTY UTILITIES VIA AN EXISTING SANITARY SEWER SYSTEM.
9. POTABLE WATER SHALL BE PROVIDED BY PASCO COUNTY FROM AN EXISTING WATER MAIN SYSTEM.
10. FIRE PROTECTION WILL BE PROVIDED FROM HYDRANTS BY THE EXISTING PASCO COUNTY FIRE STATION NO 37.
11. AT THE TERMINATION OF EACH WATER MAIN, A GATE VALVE THE SAME SIZE AS THE WATER MAIN AND 2" TEMPORARY BLOW–OFF SHALL BE INSTALLED. VALVES AND BLOW–OFFS SHALL BE RESTRAINED AND CONSTRUCTED IN ACCORDANCE WITH THE CURRENT PASCO COUNTY STANDARDS.
12. TYPICAL–ALL WATER LINES AND FORCEMAINS DEFLECTING AROUND INLETS, TREES OR OTHER OBSTRUCTIONS SHALL USE THE PIPE DEFLECTION METHOD AS REQUIRED BY P.C.U.D.
13. CONTRACTOR SHALL PREVENT FLOATATION OF STRUCTURES DURING ALL PHASES OF CONSTRUCTION.
14. RAISED PAVEMENT MARKINGS INDICATING THE FIRE HYDRANT LOCATIONS SHALL BE PROVIDED IN ACCORDANCE WITH PASCO COUNTY CODE.
15. HYDRANTS SHALL BE FLOW TESTED BY THE CONTRACTOR. THIS COULD BE PART OF A UTILITY INSPECTION OR A SEPARATE TEST, BUT NOT PART OF THE PRESSURE TEST. THE ENGINEER OF RECORD OR THEIR APPOINTED REPRESENTATIVE MUST BE PRESENT AT THIS FLOW TEST.
16. FIRE HYDRANTS SHALL BE INSTALLED AND IN SERVICE PRIOR TO THE ACCUMULATION OF COMBUSTIBLES.
17. FIRE HYDRANTS MUST BE FLOW TESTED AND COLOR–CODED. BASED ON FLOW RESULTS, THE CAPS (TOP AND 3 SIDES) ARE TO BE COLOR CODED: 0–500 GPM RED CLASS A, 500–1000 GPM ORANGE CLASS B, 1000–1500 GPM GREEN CLASS A, AND 1500+ GPM BLUE CLASS AA. ALL HYDRANT BODIES ARE TO BE BASE COLORED YELLOW.
18. THE SANITARY SEWER PLUGS SHALL BE INSTALLED AT THE BEGINNING OF CONSTRUCTION AND SHALL REMAIN IN PLACE UNTIL CERTIFICATION HAS BEEN COMPLETED FOR FACILITIES TO BE PLACED INTO SERVICE.
19. ALL WATER METERS ARE TO BE LOCATED OUTSIDE OF DRIVEWAYS.
20. ALL COMPONENTS OF WATER SYSTEM, INCLUDING FITTINGS, THRUST BLOCKING, HYDRANTS, CONNECTIONS AND VALVES SHALL REMAIN UNCOVERED UNTIL PROPERLY PRESSURE TESTED AND ACCEPTED BY THE OWNER;S ENGINEER, PRESSURE TESTS TO BE IN ACCORDANCE WITH THE LATEST EDITION OF THE REQUIREMENTS OF THE APPROPRIATE MUNICIPALITY. CONTRACTOR TO NOTIFY OWNER'S ENGINEER AND COUNTY INSPECTORS 48 HOURS IN ADVANCE OF PERFORMING TESTS.
21. CONTRACTOR TO PERFORM CHLORINATING AND BACTERIOLOGICAL SAMPLING AND OBTAIN CLEARANCE OF DOMESTIC WATER SYSTEM. COPIES OF ALL BACTERIOLOGICAL TESTS TO BE SUBMITTED TO OWNER'S ENGINEER.
22. SANITARY SEWERS, FORCE MAINS AND STORM SEWERS CROSSING WATER MAIN SHALL BE INSTALLED TO PROVIDE A MINIMUM VERTICAL DISTANCE OF 18 INCHES BETWEEN THE INVERT OF THE UPPER PIPE AND THE CROWN OF THE LOWER PIPE WHENEVER POSSIBLE.
23. WHERE SANITARY SEWERS, FORCE MAINS, RECLAIMED WATER MAINS AND STORM SEWERS MUST CROSS A POTABLE WATER MAIN WITH LESS THAN 18 INCHES VERTICAL DISTANCE: (1) BOTH THE SEWER AND THE WATER MAIN SHALL BE CONSTRUCTED OF DUCTILE IRON PIPE (DIP) AT THE CROSSING. (DIP IS NOT REQUIRED FOR STORM SEWERS IF IT IS NOT AVAILABLE IN THE SIZE PROPOSED/ALSO, A SANITARY SEWER OR FORCE MAIN MAY BE C900 PVC AT THE (CROSSING) SUFFICIENT LENGTHS OF DIP MUST BE USED TO PROVIDE A MINIMUM SEPARATION OF 10 FEET BETWEEN ANY TWO JOINTS (2) ALTERNATIVELY, ONE OF THE CROSSING MAINS SHALL BE ENCLOSED WITHIN A 20 FOOT LONG STEEL OR PVC CASING CENTERED ON THE CROSSING. WHERE WATER MAIN CROSSES BELOW SEWER MAIN, ENCASEMENT OF BOTH MAINS IS MANDATORY.
24. ALL JOINTS ON THE WATER MAIN WITHIN 20 FEET OF THE CROSSING MUST BE LEAK FREE AND MECHANICALLY RESTRAINED. A MINIMUM VERTICAL CLEARANCE OF 6 INCHES MUST BE MAINTAINED AT THE CROSSING.
25. ALL CROSSINGS SHALL BE ARRANGED SO THAT THE SEWER PIPE JOINTS AND THE WATER MAIN JOINTS ARE EQUIDISTANT FROM THE POINT OF CROSSING (PIPES CENTERED ON THE CROSSING).
26. WHERE A NEW PIPE CONFLICTS WITH AN EXISTING PIPE, THE NEW PIPE SHALL BE CONSTRUCTED OF DIP AND THE CROSSING SHALL BE ARRANGED TO MEET THE REQUIREMENTS ABOVE.
27. A MINIMUM OF 10–FOOT HORIZONTAL SEPARATION SHALL BE MAINTAINED BETWEEN ANY TYPE OF SEWER AND WATER MAIN IN PARALLEL INSTALLATIONS WHENEVER POSSIBLE.
28. IN CASES WHERE IT IS NOT POSSIBLE TO MAINTAIN A 10–FOOT HORIZONTAL SEPARATION, THE WATER MAIN MUST BE LAID IN A SEPARATE TRENCH OR ON AN UNDISTURBED EARTH SHELF LOCATED ON ONE SIDE OF THE SEWER OR FORCE MAIN AT SUCH AN ELEVATION THAT THE BOTTOM OF THE WATER MAIN IS AT LEAST 18 INCHES ABOVE THE TOP OF THE SEWER.
29. WHERE IT IS NOT POSSIBLE TO MAINTAIN A VERTICAL DISTANCE OF 18 INCHES IN PARALLEL INSTALLATIONS, THE WATER MAIN SHALL BE CONSTRUCTED OF DIP AND THE SEWER OR THE FORCE MAIN SHALL BE CONSTRUCTED OF DIP (IF AVAILABLE IN SIZE PROPOSED) WITH A MINIMUM VERTICAL DISTANCE OF 6 INCHES. THE WATER MAIN SHOULD ALWAYS BE ABOVE THE SEWER. JOINTS ON THE WATER MAIN SHALL BE LOCATED AS FAR APART AS POSSIBLE FROM THE JOINTS ON THE SEWER OR FORCE MAIN (STAGGERED JOINTS).
30. ALL ON–SITE PVC WATER MAINS 4–12 INCHES SHALL BE IN ACCORDANCE WITH AWWA C–900 STANDARDS. ALL ON–SITE PVC WATER MAINS 2–3 INCHES SHALL BE CLASS 1120 OR 1220 (SDR 21) AND MEET REQUIREMENTS OF ASTM D–2241. WATER MAINS SMALLER THAN 2 INCHES SHALL BE CLASS 1120 OR 1220 SCHEDULE 80 AND MEET REQUIREMENTS OF ASTM D–1785.
31. PE PIPE 2 INCHES OR SMALLER SHALL MEET THE REQUIREMENTS OF ASTM D–1248.
32. ALL DUCTILE IRON PIPE SHALL CONFORM TO THE REQUIREMENTS OF ANSI STANDARDS A21.51, MINIMUM CLASS 50. IN AREAS WHERE THE SOIL IS DETERMINED TO BE CORROSIVE OR HIGH GROUND WATER IS EXPECTED, THE PIPE SHALL BE INSTALLED IN LOOSE POLYETHYLENE ENCASEMENT NOT LESS THAN 8 MILS THICK AND INSTALLED IN ACCORDANCE WITH ANSI SPECIFICATION A21.51.
33. ALL WATER SYSTEM WORK SHALL CONFORM WITH LOCAL REGULATORY STANDARDS AND SPECIFICATIONS.
34. ALL NON–METALIC PIPE WILL BE INSTALLED WITH 2 PAIR, 10 GAUGE, COPPER TRACER WIRE.
35. ALL UNDERGROUND UTILITIES MUST BE IN PLACE AND TESTED OR INSPECTED PRIOR TO BASE AND PAVEMENT CONSTRUCTION.
36. ALL SANITARY SEWER WORK SHALL CONFORM WITH LOCAL REGULATORY STANDARDS AND SPECIFICATIONS.
37. ALL SANITARY SEWER MANHOLE COVERS SHALL BE TRAFFIC RATED FOR H–20 LOADING.
38. SANITARY SEWER MAINS AND LATERALS SHALL HAVE A MINIMUM COVER OF THREE (3) FEET.
39. JOINTING OF PVC PIPE USING SOLVENT CEMENTING IS NOT PERMITTED.
40. NON–METALIC FORCEMAIN PIPE WILL BE INSTALLED WITH TWO PAIR, 10 GAUGE COPPER TRACER WIRE.
41. THE CONTRACTOR SHALL PERFORM AT HIS OWN EXPENSE AN INFILTRATION OR EXFILTRATION TEST, A TELEVISION INSPECTION WITH VIDEO–TAPE RECORDS, AND A MANDREL (GO, NO GO) TEST ON ALL GRAVITY SEWERS IN ACCORDANCE WITH THE REQUIREMENTS OF THE REGULATORY AGENCY HAVING JURISDICTION. SAID TEST ARE TO BE CERTIFIED BY THE ENGINEER OF RECORD AND SUBMITTED TO THE REGULATORY AGENCY FOR APPROVAL. COORDINATION OF TESTING AND NOTIFICATION OF ALL PARITIES IS THE CONTRACTOR'S RESPONSIBILITY. THE MUNICIPALITY WILL PERFORM THE T.V. INSPECTION OF THE GRAVITY SEWER. A TESTING AGENCY APPROVED BY THE ENGINEER SHALL PERFORM THE MANDREL TESTING.
42. ALL COMPONENTS OF THE POTABLE AND RECLAIMED WATER SYSTEM (IF ANY), INCLUDING FITTINGS, HYDRANTS, CONNECTIONS AND VALVES SHALL REMAIN UNCOVERED UNTIL REVIEWED BY OWNER'S ENGINEER AND PROPERLY INSPECTED AND ACCEPTED BY THE MUNICIPALITY. PRESSURE TESTS TO BE IN ACCORDANCE WITH THE REQUIREMENTS OF THE MUNICIPALITIES. UTILITY DEPARTMENT SPECIFICATIONS. CONTRACTOR TO NOTIFY OWNER'S ENGINEER AND MUNICIPALITIES INSPECTOR FROM MUNICIPALITY 72 HOURS IN ADVANCE OF PERFORMING TEST.
43. CONTRACTOR TO CLEAN AND FLUSH WATER SERVICE CONNECTION PRIOR TO PLACING INTO SERVICE.
44. ALL OF THE ABOVE NOTES APPLY TO ALL SANITARY SEWER AND WATER DISTRIBUTION PLAN SHEETS.

PAVING, GRADING, AND DRAINAGE NOTES

1. ALL UNDERGROUND UTILITIES INCLUDING CONDUIT FOR ELECTRICAL, CABLE, IRRIGATION AND TELEPHONE CROSSINGS SHALL BE INSTALLED PRIOR TO PAVEMENT CONSTRUCTION.
2. ALL MATERIALS AND CONSTRUCTION SHALL BE IN ACCORDANCE WITH PASCO COUNTY STANDARDS AND/OR FDOT STANDARDS AS REQUIRED.
3. ALL ROADWAY CONSTRUCTION SHALL BE PERFORMED IN ACCORDANCE WITH APPLICABLE SECTIONS OF THE CURRENT VERSION OF THE "MANUAL OF UNIFORM MINIMUM STANDARDS FOR DESIGN, CONSTRUCTION AND MAINTENANCE FOR STREETS AND HIGHWAYS", STATE OF FLORIDA DEPARTMENT OF TRANSPORTATION.
4. PIPE MEASUREMENTS ARE TO CENTER OF STRUCTURES FOR INLETS AND STORM MANHOLES. MITERED END SECTIONS AND FLARED END SECTIONS ARE PART OF PIPE LENGTHS. CURB INLET STATIONS AND OFFSETS ARE CALCULATED TO EDGE OF PAVEMENT, CENTER OF BOX. ALL PIPE LENGTHS ARE APPROXIMATE.
5. DRAINAGE RUNOFF (POST DEVELOPMENT) SHALL BE COLLECTED AND DIRECTED TO PONDS VIA PIPES AND SWALES AS INDICATED ON THE MASTER DRAINAGE PLAN.
6. STAKED SILT FENCE SHALL BE INSTALLED AT LOCATIONS SHOWN ON THE PLANS PRIOR TO ANY CONSTRUCTION ACTIVITIES IN THE VICINITY OF ADJACENT WETLAND AREAS AND SHALL BE MAINTAINED THROUGH THE PROJECT COMPLETION.
7. FOR CONTROL STRUCTURE DATA, SEE POND & DRAINAGE STRUCTURE DETAIL SHEETS AND PAVING, GRADING AND DRAINAGE PLANS.
8. AFTER CONSTRUCTION OF EACH POND CONTROL STRUCTURE IS COMPLETED, A PERMANENT BENCHMARK SHALL BE ESTABLISHED ADJACENT TO OR ON THE OUTFALL STRUCTURE.
9. THE PROPOSED STORMWATER PONDS SHALL NOT BE OPERATED AND MAINTAINED BY THE PASCO COUNTY. IT SHALL BE THE RESPONSIBILITY OF ASTURIA COMMUNITY DEVELOPMENT DISTRICT TO MAINTAIN THE STORMWATER PONDS.
10. CONTRACTOR SHALL PREVENT FLOATATION OF STRUCTURES DURING ALL PHASES OF CONSTRUCTION.
11. A GEOTECHNICAL TESTING COMPANY SHALL BE PRESENT DURING POND EXCAVATION TO OBSERVE POND EXCAVATION ACTIVITIES. IF LIMEROCK IS ENCOUNTERED DURING EXCAVATION, EXCAVATION IN THIS AREA WILL STOP AND A MINIMUM OF 2 FEET OF CLAY SHALL BE BACKFILLED AND COMPACTED TO THE GEOTECH'S SATISFACTION.
12. ALL OF THE ABOVE NOTES APPLY TO ALL PAVING, GRADING AND DRAINAGE PLAN SHEETS.
13. CONTRACTOR TO PROVIDE A $\frac{1}{2}$" BITUMINOUS EXPANSION JOINT MATERIAL WITH SEALER AT ABUTMENT OF CONCRETE AND ANY STRUCTURE.
14. ALL PAVEMENT MARKINGS SHALL CONFORM TO FDOT STANDARD INDEX NO. 17346, SHEETS 1–7.
15. CONTRACTOR SHALL TRIM, TACK AND MATCH EXISTING PAVEMENT AT LOCATIONS WHERE NEW PAVEMENT MEETS EXISTING PAVEMENT.
16. PAD ELEVATION IS FINISHED FLOOR ELEVATION MINUS 6".
17. STANDARD INDEXES REFER TO THE LATEST EDITION OF FDOT "ROADWAY AND TRAFFIC DESIGN STANDARDS".
18. ALL STORM SEWER PIPE SHALL BE REINFORCED CONCRETE CLASS III (ASTM C–76) WITH RUBBER GASKET JOINTS UNLESS OTHERWISE NOTED ON PLANS. ALL INLETS, MANHOLES AND JUNCTION BOXES SHALL CONFORM TO THE FLORIDA DOT STANDARD SPECIFICATIONS FOR ROAD AND BRIDGE CONSTRUCTION LATEST EDITION. ALL INLETS ARE TO HAVE MANHOLE LIDS FOR MAINTENANCE ACCESS. ALL PIPE ARE TO BE CUT FLUSH WITH THE INSIDE WALLS OF MANHOLES AND JUNCTION BOXES.
19. PIPE LENGTHS SHOWN ARE APPROXIMATE AND TO THE CENTER OF DRAINAGE STRUCTURES WITH THE EXCEPTION OF MITERED END AND FLARED END SECTIONS WHICH ARE INCLUDED IN LENGTHS.
20. ALL DRAINAGE STRUCTURE GRATES AND COVERS WITHIN TRAFFIC AREAS SHALL BE TRAFFIC RATED FOR H–20 LOADINGS.
21. CONTRACTOR TO SOD ANY SUMPS AS INDICATED ON PLANS WITHIN ONE WEEK FOLLOWING CONSTRUCTION OF THE SUMPS.
22. ALL STORM DRAINAGE STRUCTURES DEEPER THAN TEN (10) FEET TO HAVE LADDER BARS.
23. CONTRACTOR IS RESPONSIBLE FOR OBTAINING THE NECESSARY DEWATERING PERMITS FROM THE LOCAL WATER MANAGEMENT DISTRICT OR OTHER REGULATORY AGENCY.
24. PROTECTION OF EXISTING STORM SEWERS SYSTEMS: DURING CONSTRUCTION, ALL STORM SEWER INLETS IN THE VICINITY OF THE PROJECT SHALL BE PROTECTED BY SEDIMENT TRAPS SUCH AS SECURED HAY BALES, SOD, STONE, ETC., WHICH SHALL BE MAINTAINED AND MODIFIED AS REQUIRED BE CONSTRUCTION PROGRESS.
25. MATERIALS AND CONSTRUCTION METHODS FOR STREETS AND STORM DRAINAGE CONSTRUCTION SHALL BE IN ACCORDANCE WITH THE LOCAL REGULATORY AGENCY AND THE FLORIDA DEPARTMENT OF TRANSPORTATION STANDARD SPECIFICATIONS FOR ROAD AND BRIDGE CONSTRUCTION, 1996, OR LATEST REVISION THEREOF AND SUPPLEMENTAL SPECIFICATIONS THERETO.
26. ALL RELOCATION OR MODIFICATION OF PROPOSED STORM SEWER SYSTEM SHALL NOT BE MADE WITHOUT THE APPROVAL OF THE ENGINEER OF RECORD.
27. ALL BACKFILL OVER STORM SEWER PIPE THAT IS TO BE INSTALLED UNDER ROADWAYS OR WITHIN THE EMBANKMENT, ETC. OF THE ROADWAY IS TO BE COMPACTED TO 98% DENSITY AS DETERMINED BY AASHTO T–180 PER PASCO COUNTY ENGINEERING SERVICES DEPARTMENT TESTING SPECIFICATIONS FOR CONSTRUCTION OF ROADS, STORM DRAINAGE, AND UTILITIES, OCTOBER 2006.
28. IF LIMESTONE BEDROCK IS ENCOUNTERED DURING CONSTRUCTION OF THE SURFACE WATER MANAGEMENT SYSTEM. THE DISTRICT MUST BE NOTIFIED AND CONSTRUCTION IN THE AFFECTED AREA SHALL CEASE.
29. NO EXCAVATIONS SHALL EXTEND BELOW THE PERMITTED DEPTHS/ELEVATIONS SHOWN ON THE PLANS. NO CONFINING LAYER OF CLAYEY MATERIAL SHALL BE BREACHED AND/OR LIMEROCK MATERIAL SHALL BE EXCAVATED, REGARDLESS IF THESE MATERIALS ARE ENCOUNTERED ABOVE THE PERMITTED DEPTHS/ELEVATIONS. IF SUCH ARE DISCOVERED DURING EXCAVATION, THEN THE GEOTECHNICAL ENGINEER SHALL BE NOTIFIED AND EXCAVATION CEASE IN THAT AREA. IF IT IS DETERMINED THAT SUCH MATERIAL IS NON–CONFINING AND IS WITHIN THE LIMITS OF THE PERMITTED PLANS THEN EXCAVATION MAY CONTINUE. NO CLAY MATERIAL SHALL BE LEFT EXPOSED IN ANY POND. WHERE CLAY OR SANDY–CLAYS ARE EXPOSED AT THE PERMITTED BOTTOM OR SIDE LIMITS OF THE EXCAVATION, THE CONTRACTOR SHALL OVER–EXCAVATE BY A MINIMUM OF TWELVE (12) INCHES AND BACKFILL WITH CLEAN SANDS TO PREVENT SUSPENSION OF FINE PARTICLES IN THE WATER COLUMN. IN NO INSTANCE SHALL THE CONTRACTOR OVER–EXCAVATE THE BOTTOM OF THE POND IN A WAY TO COMPROMISE A CONFINING LAYER OF CLAY.
30. THE STORM DRAINAGE PIPING AND FILTRATION SYSTEM SHALL BE SUBJECT TO A VISUAL OBSERVATION BY THE OWNER'S ENGINEER PRIOR TO THE PLACEMENT OF BACKFILL. CONTRACTOR TO NOTIFY THE ENGINEER 48 HOURS IN ADVANCE TO SCHEDULE.
31. THE CONTRACTOR SHALL MAINTAIN THE STORM DRAINAGE SYSTEMS UNTIL FINAL ACCEPTANCE OF THE PROJECT. THE STORM SYSTEM WILL BE REVIEWED BY THE OWNER'S ENGINEER PRIOR TO FINAL ACCEPTANCE.
32. THE CONTRACTOR IS RESPONSIBLE FOR COORDINATING APPLICABLE TESTING WITH THE GEOTECHNICAL ENGINEER. TEST WILL BE REQUIRED FOR EMBANKMENT, SUBGRADE, SOIL CEMENT BASE COURSE AND ASPHALT SURFACE COURSE. ALL TESTING SHALL BE IN ACCORDANCE WITH THE PASCO COUNTY SPECIFICATIONS.
33. GEOTECHNICAL ENGINEER TO SUPPLY THE ENGINEER WITH A PHOTOCOPY OF ALL RESULTS. THE SOILS ENGINEER IS TO VERIFY TO THE ENGINEER OF RECORD IN WRITING THAT ALL TESTING REQUIREMENTS REQUIRED BY LOCAL REGULATORY AGENCY AND THE FLORIDA DEPARTMENT OF TRANSPORTATION(FDOT) FOR THE IMPROVEMENTS AS REQUIRED BY THE CONSTRUCTION DRAWINGS HAVE BEEN SATISFIED.
34. CONTRACTOR TO REVIEW SOILS REPORTS AND BORINGS PRIOR TO BIDDING THE PROJECT AND COMMENCING CONSTRUCTION.
35. THE DEVELOPER MAY PROVIDE SIDEWALKS IN EXCESS OF THE MINIMUM COUNTY REQUIREMENTS. THE SIDEWALKS, AS DEPICTED IN THESE DOCUMENTS, MAY BE CONSTRUCTED SIMILAR TO WHAT IS DEPICTED, BUT IN NO CASE SHALL THE CONSTRUCTED SIDEWALKS BE LESS THAN WHAT IS REQUIRED BY CODE.

STANDARD FIRE PROTECTION NOTES:

1. ALL PROJECTS MUST COMPLY WITH PASCO COUNTY FIRE HYDRANT ORDINANCE NO. 46–51.
2. FIRE HYDRANTS SHALL BE INSTALLED AND IN SERVICE PRIOR TO THE ACCUMULATION OF COMBUSTIBLES.
3. PER THE NATIONAL FIRE ASSOCIATION, NFPA–1, 16.4.3.1.3: WHERE UNDERGROUND WATER MAINS AND HYDRANTS ARE TO BE PROVIDED, THEY SHALL BE INSTALLED, COMPLETED, AND IN SERVICE PRIOR TO CONSTRUCTION WORK.
4. PER NFPA–1, 18.3.4.1: CLEARANCES OF 1.5 FEET IN FRONT OF AND TO THE SIDES OF THE FIRE HYDRANT WITH A 4 FOOT CLEARANCE TO THE REAR MUST BE MAINTAINED AT ALL TIMES.
5. GATED ENTRIES REQUIRE A SIREN OPERATING SYSTEM OR A 3M OPTICOM SYSTEM FOR EMERGENCY ACCESS.

PAUL E. SKIDMORE
LICENSE
NO. 39631
STATE OF FLORIDA
PROFESSIONAL ENGINEER

JOB NO.	EPN	DATE	DESIGNED	DRAWN	CHECKED	Q.C.
506-100F	213	10-1-2015	RAH	RAH	PES	

NO.	DATE	REVISIONS	APP'D BY

DESIGNED FOR
ASTURIA COMMUNITY DEVELOPMENT DISTRICT
605 PALENCIA CLUB DRIVE, ST. AUGUSTINE, FLORIDA 32095
PHONE: (904) 810-0500 - FAX: (904) 810-0525 - E-MAIL: sean.manson@hines.com

PROJECT NAME
Asturia
PHASE 2

SHEET NAME
GENERAL NOTES

ENGINEER / SURVEYOR
FLORIDA DESIGN CONSULTANTS, INC.
THINK IT. ACHIEVE IT.
3030 STARKEY BOULEVARD, NEW PORT RICHEY, FLORIDA 34655
PHONE: (800) 532 - 1047 FAX: (727) 848 - 3648 WWW.FLDESIGN.COM C.A. NO. 7421
E-MAIL: pskidmore@fldesign.com

PLAN SET DATE
October 7, 2015

©Copyright 2015 Florida Design Consultants, Inc. Drawings and concepts may not be used or reproduced without written permission.

K:\213\ProjData\ConstDocs\Plans\Phase 2\213_ASTURIA-PH2-PGN.DWG - Oct 20, 2015 @ 1:23pm - rhall

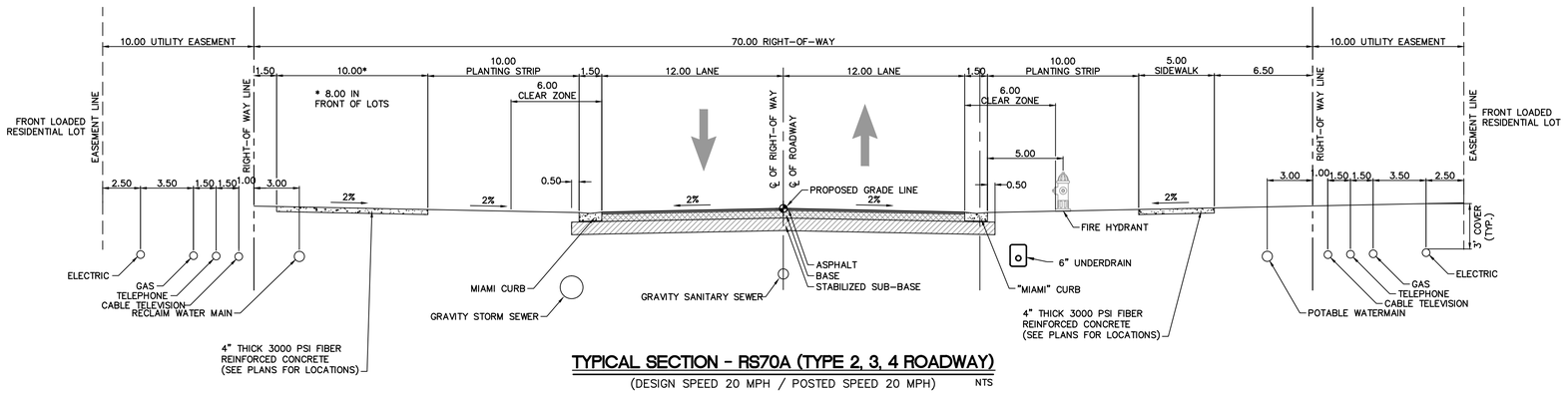

TYPICAL SECTION - RS70A (TYPE 2, 3, 4 ROADWAY)

(DESIGN SPEED 20 MPH / POSTED SPEED 20 MPH) NTS

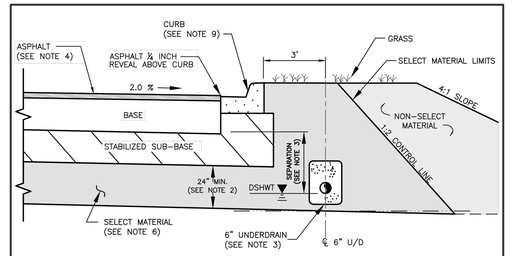

SECTIONAL VIEW
NTS

NOTES:

1. THE MINIMUM VERTICAL SEPARATION BETWEEN THE DESIGN SEASONAL HIGH WATER TABLE (DSHWT) AND THE BOTTOM OF THE BASE AT THE LOWEST EDGE OF PAVEMENT SHALL BE AS FOLLOWS:
   A. LIMEROCK BASE 24 INCH
   B. SOIL CEMENT BASE 12 INCH
   C. CRUSHED CONCRETE BASE (IF APPROVED) 12 INCH
   D. ASPHALT BASE COURSE (ABC) 12 INCH
2. A MINIMUM TWO (2) FEET OF SELECT MATERIAL CONSISTING OF A-1, A-3 OR A-2-4 WITH A MAXIMUM 15% PASSING THE #200 SIEVE BELOW THE STABILIZED SUB-BASE.
3. IF THE VERTICAL SEPARATION BETWEEN DSHWT AND BOTTOM OF BASE IS LESS THAN 2 FEET, UNDERDRAINS SHALL BE CONSTRUCTED ALONG BOTH SIDES OF THE ROAD. IF 2-3 FEET, UNDERDRAINS SHALL BE CONSTRUCTED ALONG ONE SIDE. THE INVERT OF A SIX (6) INCH UNDERDRAIN SHALL BE TWO (2) FEET MINIMUM BELOW THE BOTTOM OF THE BASE.
4. TYPE 2 THRU TYPE 5 ROADWAYS SHALL CONTAIN A MINIMUM OF 1.5 INCH OF SP ASPHALTIC CONCRETE. COLLECTOR ROADWAYS SHALL HAVE A MINIMUM OF THREE (3) INCHES OF SP ASPHALTIC CONCRETE. TYPE 1 ROADWAYS MAY BE COMPLETED IN STAGES, INITIALLY 2.25 INCHES OF SP 12.5 (S-1) ASPHALT COURSE WITH REQUIRED PAVEMENT MARKINGS AND 0.75 INCHES OF SP 9.5 (S-3) COURSE INSTALLED WITH ANY THERMOPLASTIC STRIPES, PRIOR TO RELEASE OF THE ASSURANCE FOR MAINTENANCE.
5. THE ROAD DESIGN DRAWINGS SHALL CONTAIN SOIL BORING LOCATIONS WITH EXISTING SOIL DATA, OBSERVED WATER LEVEL AND DSHWT SURFACE. UNDERDRAIN OUTFALL POND DATA AND PROXIMATE WETLAND HYDRO PERIOD ELEVATIONS SHALL ALSO BE IDENTIFIED.
6. SELECT MATERIAL SHALL BE PLACED PER FDOT INDEX DRAWINGS 500 & 505.
7. THE REQUIRED MINIMUM STRUCTURAL NUMBER (SN) SHALL BE:
   2.34 MIN. TYPE 2 ROADWAY
   3.50 MIN. TYPE 1 ROADWAYS
   3.70 MIN. COUNTY COLLECTOR
   4.00 MIN. COUNTY ARTERIAL
8. SOIL CEMENT BASE SHALL NOT BE CONSTRUCTED OVER STABILIZED SUBGRADE EXCEEDING LBR 20. THE COUNTY ASSIGNED LAYER COEFFICIENT FOR A MAXIMUM 12 INCH DEPTH, LBR 20 SHALL BE 0.04 PER INCH.
9. CURB DESIGN IS SITE SPECIFIC AND SHALL BE IDENTIFIED ON PLANS.

NOTE:
NO DEVIATIONS TO THIS DETAIL WILL BE PERMITTED UNLESS APPROVED BY THE COUNTY ENGINEER.
ANY PROPOSED ALTERATIONS SHALL BE CLEARLY IDENTIFIED AND HIGHLIGHTED ON DETAIL.

PASCO COUNTY ENGINEERING SERVICES
DESIGN STANDARDS

ROADWAY DESIGN CRITERIA

APPROVED BY JCW | BCC APPROVAL | REVISED

Sheet No. 1 of 1 | Index No. 100

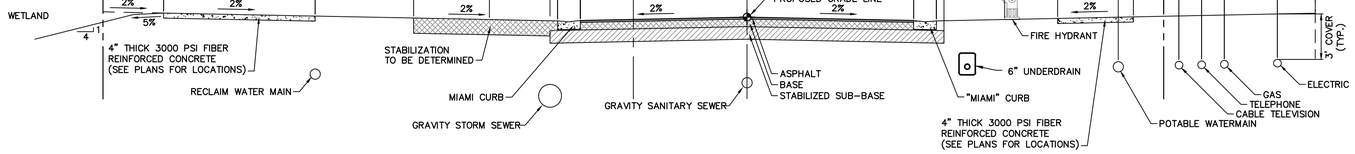

TYPICAL SECTION - RS70B (TYPE 2 ROADWAY)

(DESIGN SPEED 20 MPH / POSTED SPEED 20 MPH) NTS

NOTE: REFER TO FDOT INDEX 286 FOR DETAIL OF UNDERDRAIN. USE TYPE II UNDERDRAIN W/ COURSE AGGREGATE.

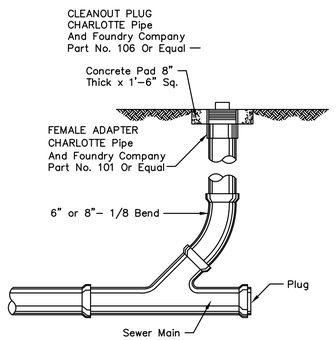

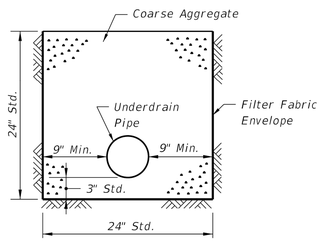

TYPE II

UNDERDRAIN CLEANOUT

NTS

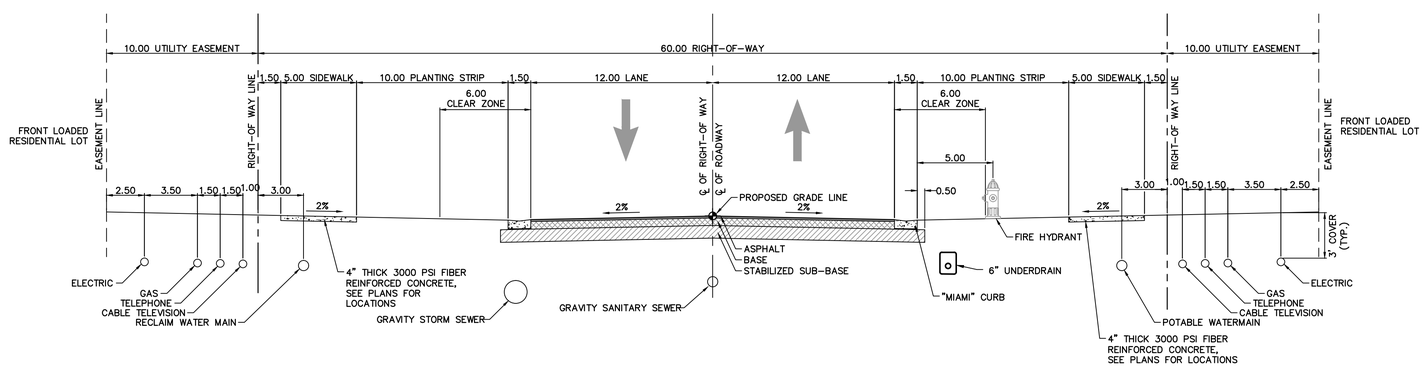

TYPICAL SECTION - RS60A (TYPE 2, 3 AND 4 ROADWAY)

(DESIGN SPEED 20 MPH / POSTED SPEED 20 MPH) NTS

TYPE 2, 3 AND 4 STRUCTURAL NUMBER CALCULATION

STANDARD SECTION

LAYER DESCRIPTION	COEFF	DEPTH	SN
1.5" TYPE SP-12.5 ASPHALT	0.44	1.5	0.55
6" CRUSHED CONCRETE BASE (LBR-150)	0.15	6.0	0.90
10" STABILIZED SUB-BASE (LBR-40)	0.08	12.0	0.96
TOTAL PROVIDED			2.41

> 2.34 (MIN)

ALTERNATIVE "A"

LAYER DESCRIPTION	COEFF	DEPTH	SN
1.5" TYPE SP-12.5 ASPHALT	0.44	1.50	0.66
8" SOIL CEMENT (300 PSI)	0.15	8.00	1.20
12" STABILIZED SUB-BASE (LBR-20)	0.04	12.0	0.48
TOTAL PROVIDED			2.34

= 2.34 (MIN)

NOTE: MINIMUM ROADWAY STRUCTURAL COEFFICIENTS AND DESIGN STANDARDS WERE BASED ON CHAPTER 900, SECTION 901.6, STREET DESIGN AND DEDICATION REQUIREMENTS, OF THE PASCO COUNTY LAND DEVELOPMENT CODE.

PAUL E. SKIDMORE
LICENSE NO. 39631
STATE OF FLORIDA
PROFESSIONAL ENGINEER

JOB NO.	EPN	DATE	DESIGNED	DRAWN	CHECKED
506-100F	213	10-1-2015	RAH	RAH	PES

REVISIONS: NO. | DATE | BY

DESIGNED FOR
ASTURIA COMMUNITY DEVELOPMENT DISTRICT
600 PALMETTO CLUB DRIVE ST. AUGUSTINE, FLORIDA 32092
PHONE: (904) 810-0500 - FAX: (904) 810-0505 - E-MAIL: sean.mariano@dhmres.com

PROJECT NAME: Asturia — PHASE 2

SHEET NAME: **TYPICAL SECTIONS AND DETAILS**

ENGINEER / SURVEYOR

FLORIDA DESIGN CONSULTANTS, INC.
— THINK IT. ACHIEVE IT. —
3030 STARKEY BOULEVARD, NEW PORT RICHEY, FLORIDA 34655
PHONE: (800) 532 - 1047 FAX: (727) 848 - 3648 WWW.FLDESIGN.COM C.A. NO. 7421
E-MAIL: pskidmore@fldesign.com

PLAN SET DATE: October 7, 2015

SHEET 5 OF 52

© Copyright 2015 Florida Design Consultants, Inc. Drawings and concepts may not be used or reproduced without written permission.

K:\2013\Proj Data\ConstDocs\Plans\Phase 2\213_ASTURIA-PH2-RTYP.dwg - Oct 20, 2015 @ 1:23pm - rhall

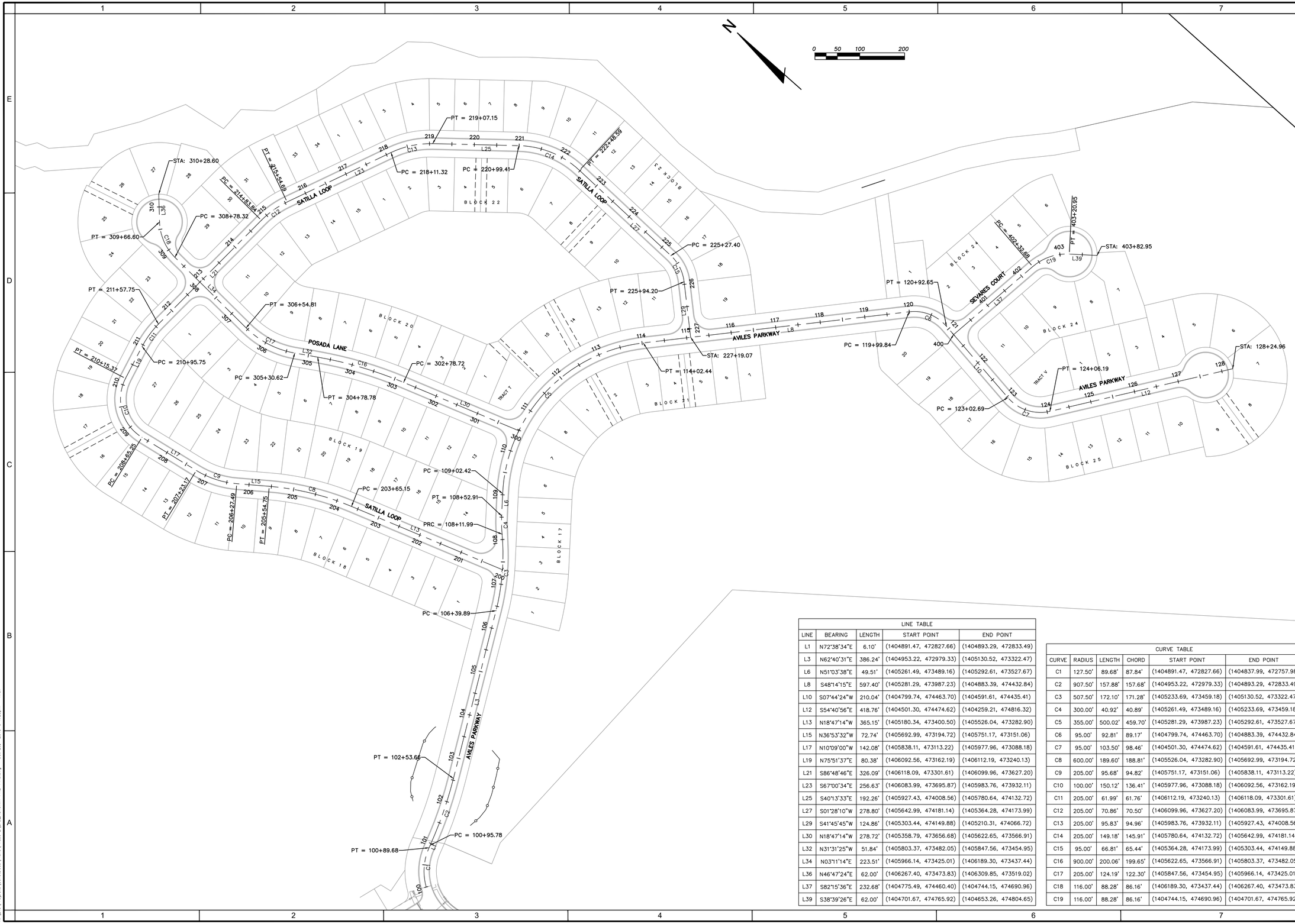

LINE TABLE				
LINE	BEARING	LENGTH	START POINT	END POINT
L1	N72°38'34"E	6.10'	(1404891.47, 472827.66)	(1404893.29, 472833.49)
L3	N62°40'31"E	386.24'	(1404953.22, 472979.33)	(1405130.52, 473322.47)
L6	N51°03'38"E	49.51'	(1405261.49, 473489.16)	(1405292.61, 473527.67)
L8	S48°14'15"E	597.40'	(1405281.29, 473987.23)	(1404883.39, 474432.84)
L10	S07°44'24"W	210.04'	(1404799.74, 474463.70)	(1404591.61, 474435.41)
L12	S54°40'56"E	418.76'	(1404501.30, 474474.62)	(1404259.21, 474816.32)
L13	N18°47'14"W	365.15'	(1405180.34, 473400.50)	(1405526.04, 473282.90)
L15	N36°53'32"W	72.74'	(1405692.99, 473194.72)	(1405751.17, 473151.06)
L17	N10°09'00"W	142.08'	(1405838.11, 473113.22)	(1405977.96, 473088.18)
L19	N75°51'37"E	80.38'	(1406092.56, 473162.19)	(1406112.19, 473240.13)
L21	S86°48'46"E	326.09'	(1406118.09, 473301.61)	(1406099.96, 473627.20)
L23	S67°00'34"E	256.63'	(1406083.99, 473695.87)	(1405983.76, 473932.11)
L25	S40°13'33"E	192.26'	(1405927.43, 474008.56)	(1405780.64, 474132.72)
L27	S01°28'10"W	278.80'	(1405642.99, 474181.14)	(1405364.28, 474173.99)
L29	S41°45'45"W	124.86'	(1405303.44, 474149.88)	(1405210.31, 474066.72)
L30	N18°47'14"W	278.72'	(1405358.79, 473656.68)	(1405622.65, 473566.91)
L32	N31°31'25"W	51.84'	(1405803.37, 473482.05)	(1405847.56, 473454.95)
L34	N03°11'14"E	223.51'	(1405966.14, 473425.01)	(1406189.30, 473437.44)
L36	N46°47'24"E	62.00'	(1406267.40, 473473.83)	(1406309.85, 473519.02)
L37	S82°15'36"E	232.68'	(1404775.49, 474460.40)	(1404744.15, 474690.96)
L39	S38°39'26"E	62.00'	(1404701.67, 474765.92)	(1404653.26, 474804.65)

CURVE TABLE					
CURVE	RADIUS	LENGTH	CHORD	START POINT	END POINT
C1	127.50'	89.68'	87.84'	(1404891.47, 472827.66)	(1404837.99, 472757.98)
C2	907.50'	157.88'	157.68'	(1404953.22, 472979.33)	(1404893.29, 472833.49)
C3	507.50'	172.10'	171.28'	(1405233.69, 473459.18)	(1405130.52, 473322.47)
C4	300.00'	40.92'	40.89'	(1405261.49, 473489.16)	(1405233.69, 473459.18)
C5	355.00'	500.02'	459.70'	(1405281.29, 473987.23)	(1405292.61, 473527.67)
C6	95.00'	92.81'	89.17'	(1404799.74, 474463.70)	(1404883.39, 474432.84)
C7	95.00'	103.50'	98.46'	(1404501.30, 474474.62)	(1404591.61, 474435.41)
C8	600.00'	189.60'	188.81'	(1405526.04, 473282.90)	(1405692.99, 473194.72)
C9	205.00'	95.68'	94.82'	(1405751.17, 473151.06)	(1405838.11, 473113.22)
C10	100.00'	150.12'	136.41'	(1405977.96, 473088.18)	(1406092.56, 473162.19)
C11	205.00'	61.99'	61.76'	(1406112.19, 473240.13)	(1406118.09, 473301.61)
C12	205.00'	70.86'	70.50'	(1406099.96, 473627.20)	(1406083.99, 473695.87)
C13	205.00'	95.83'	94.96'	(1405983.76, 473932.11)	(1405927.43, 474008.56)
C14	205.00'	149.18'	145.91'	(1405780.64, 474132.72)	(1405642.99, 474181.14)
C15	95.00'	66.81'	65.44'	(1405364.28, 474173.99)	(1405303.44, 474149.88)
C16	900.00'	200.06'	199.65'	(1405622.65, 473566.91)	(1405803.37, 473482.05)
C17	205.00'	124.19'	122.30'	(1405847.56, 473454.95)	(1405966.14, 473425.01)
C18	116.00'	88.28'	86.16'	(1406189.30, 473437.44)	(1406267.40, 473473.83)
C19	116.00'	88.28'	86.16'	(1404744.15, 474690.96)	(1404701.67, 474765.92)

PAUL E. SKIDMORE LICENSE NO. 39631 STATE OF FLORIDA PROFESSIONAL ENGINEER

JOB NO.	506-100F
EPN	213
DATE	10-1-2015
DESIGNED	RAH
DRAWN	RAH
CHK.	
APPROVED	PES

NO.	DATE	REVISIONS

DESIGNED FOR
ASTURIA COMMUNITY DEVELOPMENT DISTRICT
6051 PALENCIA CLUB DRIVE, ST. AUGUSTINE, FLORIDA 32095
PHONE: (904) 810-0500 - FAX: (904) 810-0525 - E-MAIL: sean.mamaw@inwest.com

PROJECT NAME
Asturia
PHASE 2

SHEET NAME
HORIZONTAL CONTROL PLAN

ENGINEER / SURVEYOR
FLORIDA DESIGN CONSULTANTS, INC.
THINK IT. ACHIEVE IT.
3030 STARKEY BOULEVARD, NEW PORT RICHEY, FLORIDA 34655
PHONE: (800) 532 - 1047 FAX: (727) 848 - 3648 WWW.FLDESIGN.COM C.A. NO. 7421
E-MAIL: pskidmore@fldesign.com

PLAN SET DATE
October 7, 2015

SHEET
6 OF 52

©Copyright 2015 Florida Design Consultants, Inc. Drawings and concepts may not be used or reproduced without written permission.

K:\213\Projects\ConstDocs\Plans\Phase 2\213_ASTURIA-PH2-PHC.dwg - Oct 20, 2015 @ 1:23pm - rhall

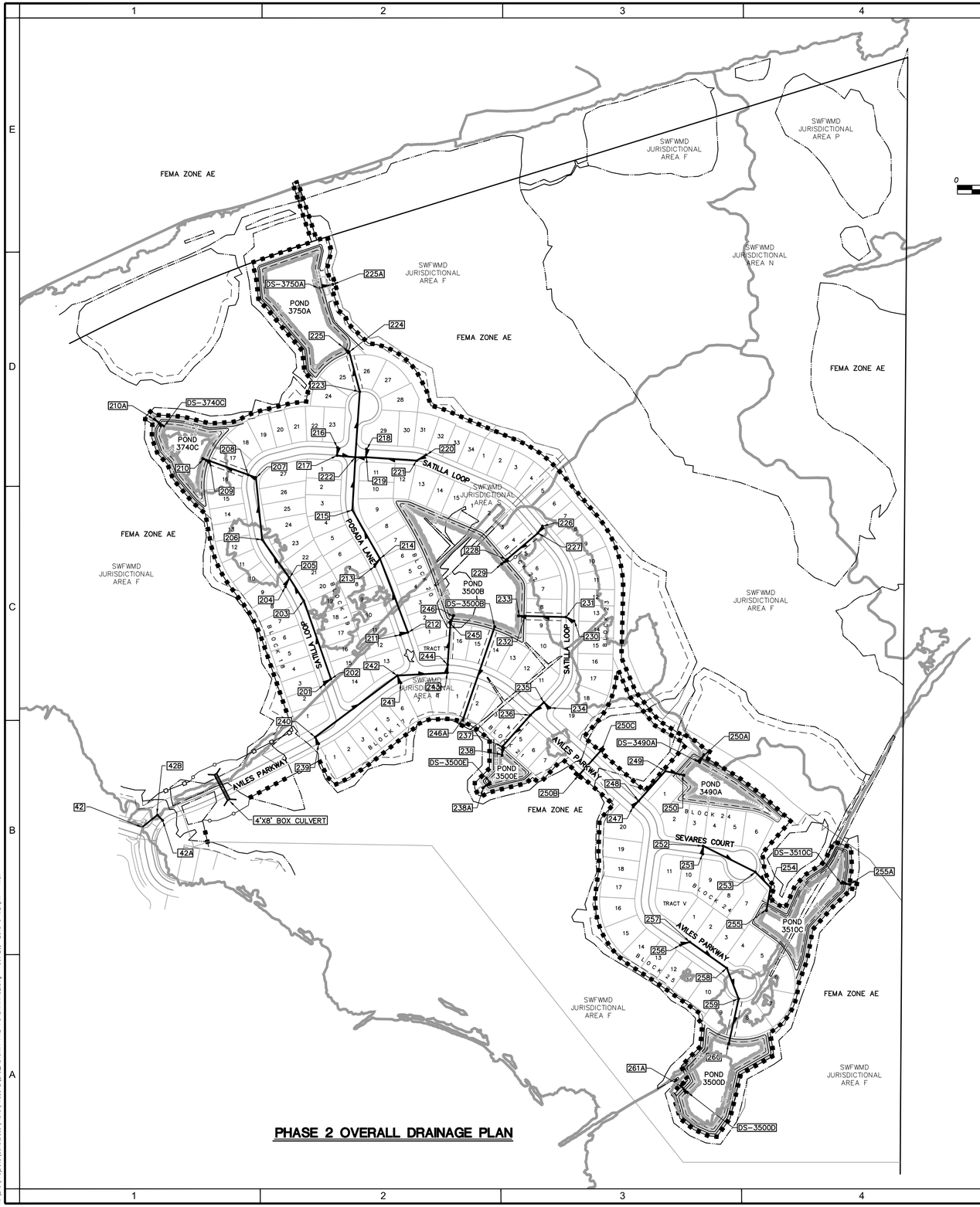

PHASE 2 OVERALL DRAINAGE PLAN

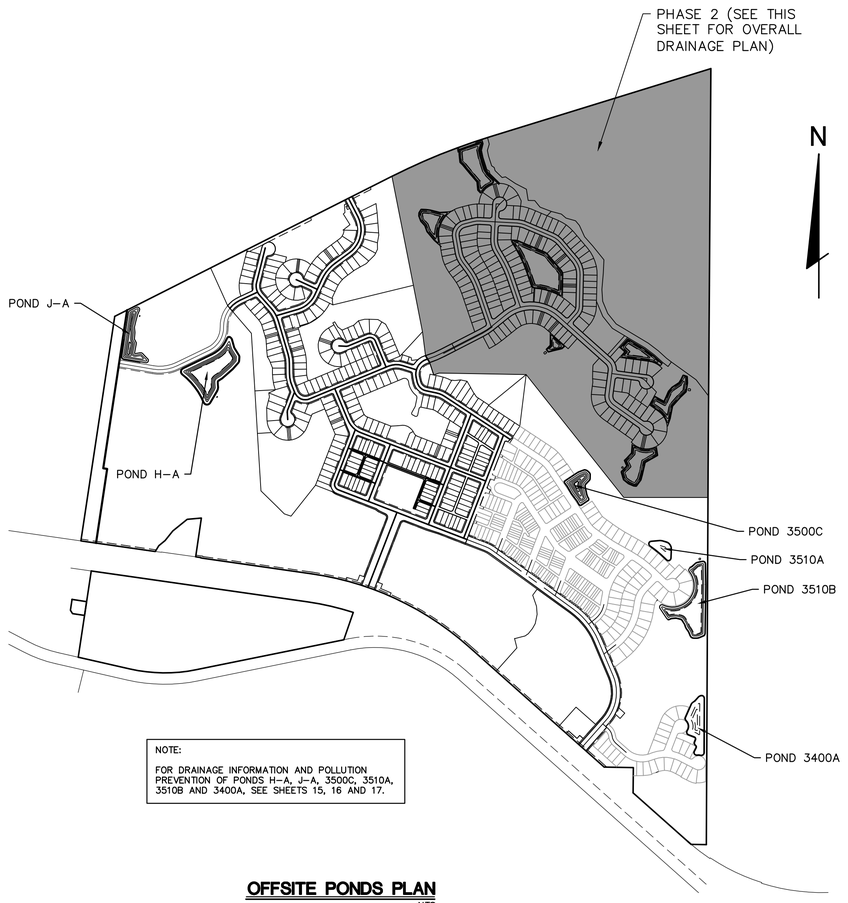

NOTE:

FOR DRAINAGE INFORMATION AND POLLUTION PREVENTION OF PONDS H-A, J-A, 3500C, 3510A, 3510B AND 3400A, SEE SHEETS 15, 16 AND 17.

OFFSITE PONDS PLAN

NTS

PAUL E. SKIDMORE LICENSE NO. 39631 STATE OF FLORIDA PROFESSIONAL ENGINEER

JOB NO.	EPN	DATE	DESIGNED	DRAWN	CHKD.
506-100F	213	10-1-2015	RAH	RAH	PES

NO.	DATE	REVISIONS	APP'D

DESIGNED FOR
ASTURIA COMMUNITY DEVELOPMENT DISTRICT
6551 PALENCIA CLUB DRIVE, ST. AUGUSTINE, FLORIDA 32095
PHONE: (904) 810-0500 - FAX: (904) 810-0525 - E-MAIL: sean.mcmanus@dmea.com

PROJECT NAME: Asturia | PHASE 2

SHEET NAME: **OVERALL DRAINAGE AND STORMWATER POLLUTION PREVENTION PLAN (1)**

ENGINEER / SURVEYOR
FLORIDA DESIGN CONSULTANTS, INC.
— THINK IT. ACHIEVE IT. —
3030 STARKEY BOULEVARD, NEW PORT RICHEY, FLORIDA 34655
PHONE: (800) 532 - 1047 FAX: (727) 848 - 3648 WWW.FLDESIGN.COM C.A. NO. 7421
E-MAIL: pskidmore@fldesign.com

PLAN SET DATE
October 7, 2015

SHEET 7 OF 52

©Copyright 2015 Florida Design Consultants, Inc. Drawings and concepts may not be used or reproduced without written permission.

K:\213\ProData\ConstDocs\Plans\Phase 2\213_ASTURIA--PH2--POADRAINAGE.dwg - Oct 20, 2015 @ 1:24pm - rhall

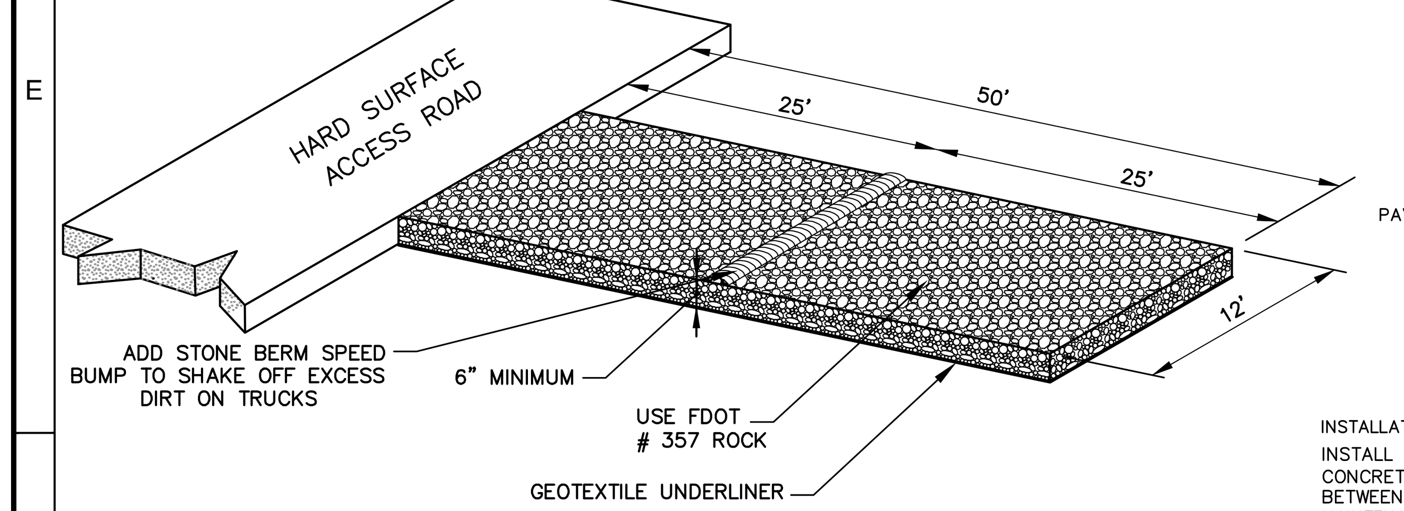

TEMPORARY CONSTRUCTION ACCESS

N.T.S.

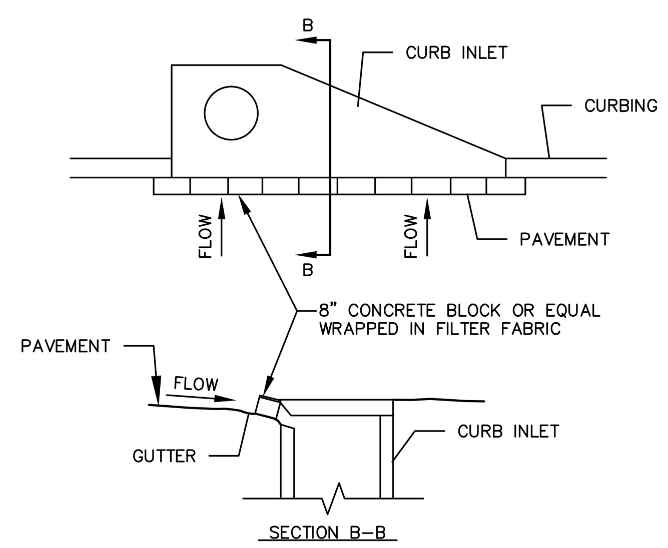

INSTALLATION:
INSTALL CURB INLET SEDIMENT BARRIER IMMEDIATELY AFTER PAVING. USE 8" CONCRETE BLOCK OR EQUAL WRAPPED IN FILTER FABRIC. PROVIDE A 4" GAP BETWEEN BARRIER AND INLET TO ALLOW OVERFLOW.
MAINTENANCE:
THE BARRIER SHALL BE INSPECTED DAILY AND AFTER EACH RAIN AND REPAIRS MADE AS NEEDED. SEDIMENT SHALL BE REMOVED WHEN THE SEDIMENT HAS ACCUMULATED TO ONE–HALP THE HEIGHT OF THE BARRIER. SEDIMENT SHALL NOT BE WASHED INTO THE INLET. IT SHALL BE REMOVED FROM THE SEDIMENT BARRIER AND DISPOSED OF AND STABILIZED SO THAT IT WILL NOT ENTER THE INLET, AGAIN.

CURB INLET SEDIMENT BARRIER

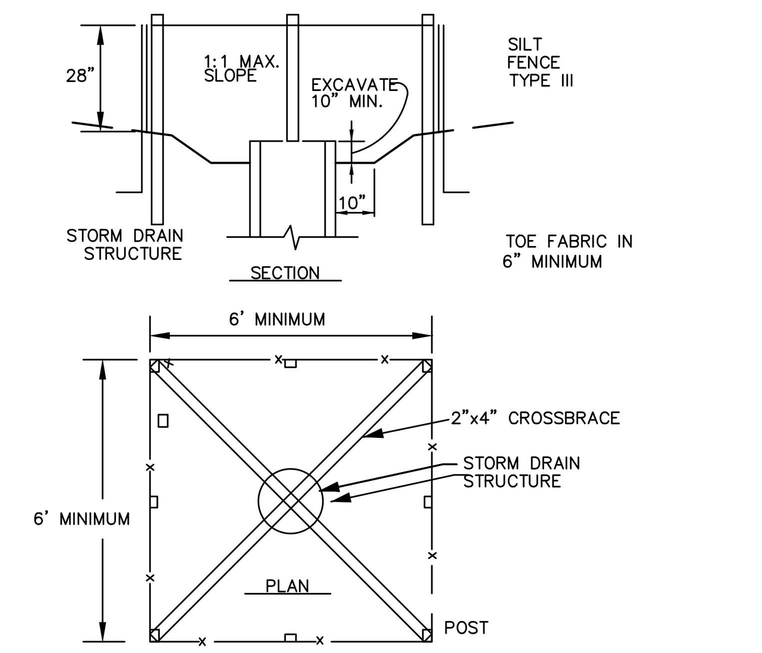

INSTALLATION:
TYPE III SILT FENCE SUPPORTED BY STEEL POST SHALL BE USED. THE STAKES SHALL BE SPACED EVENLY AROUND THE PERIMETER OF THE INLET A MAXIMUM OF 3 FEET APART, AND SECURELY DRIVEN INTO THE GROUND, APPROXIMATELY 18 INCHES DEEP. THE FABRIC SHALL BE ENTRENCHED 12 INCHES AND BACKFILLED WITH CRUSHED STONE OR COMPACTED SOIL. FABRIC AND WIRE SHALL BE SECURELY FASTENED TO THE POST, AND FABRIC ENDS MUST BE OVERLAPPED A MINIMUM OF 18 INCHES OR WRAPPED TOGETHER AROUND A POST TO PROVIDE A CONTINUOUS FABRIC BARRIER AROUND THE INLET.
MAINTENANCE:
THE BARRIER SHALL BE INSPECTED DAILY AND AFTER EACH RAIN AND REPAIRS MADE AS NEEDED. SEDIMENT SHALL BE REMOVED WHEN THE SEDIMENT HAS ACCUMULATED TO ONE–HALF THE HEIGHT OF THE BARRIER. SEDIMENT SHALL NOT BE WASHED INTO THE INLET. IT SHALL BE REMOVED FROM THE SEDIMENT BARRIER AND DISPOSED OF AND STABILIZED SO THAT IT WILL NOT ENTER THE INLET, AGAIN.

INLET SEDIMENT BARRIER FILTER FABRIC WITH SUPPORTING FRAME

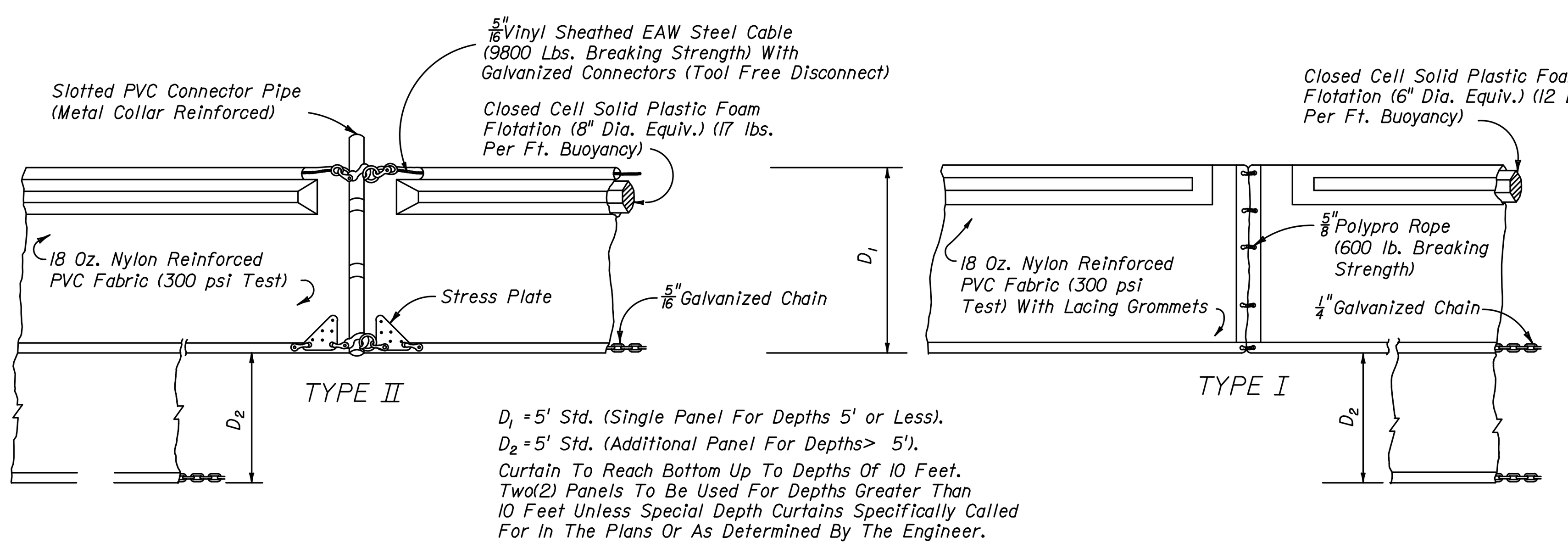

D_1 = 5' Std. (Single Panel For Depths 5' or Less).
D_2 = 5' Std. (Additional Panel For Depths> 5').
Curtain To Reach Bottom Up To Depths Of 10 Feet. Two(2) Panels To Be Used For Depths Greater Than 10 Feet Unless Special Depth Curtains Specifically Called For In The Plans Or As Determined By The Engineer.

NOTICE: COMPONENTS OF TYPES I AND II MAY BE SIMILAR OR IDENTICAL TO PROPRIETARY DESIGNS. ANY INFRINGEMENT ON THE PROPRIETARY RIGHTS OF THE DESIGNER SHALL BE THE SOLE RESPONSIBILITY OF THE USER. SUBSTITUTIONS FOR TYPES I AND II SHALL BE AS APPROVED BY THE ENGINEER.

FLOATING TURBIDITY BARRIERS

D.O.T. INDEX #103 N.T.S.

MAINTENANCE OF SILT SCREENS:
SILT SCREENS SHALL BE INSPECTED AFTER EACH RAINFALL EVENT FOR SIGNS OF DETERIORATION OR FAILURE. DETERIORATION OF A SILT SCREEN SHALL BE CONSTRUED TO MEAN THAT THE SILT SCREEN HAS LIMITED EFFECTIVENESS OR CAPACITY FOR THE FUNCTION OF TRAPPING SEDIMENT, DUE TO PROBLEMS SUCH AS, BUT NOT LIMITED TO, EXCESSIVE BUILDUP OF SEDIMENT OR CONSTRUCTION ACCIDENT. WHEN A SILT SCREEN BECOMES DETERIORATED, IT SHALL BE IMMEDIATELY REMEDIED AT THE DIRECTION OF THE ENGINEER BY SUCH MEANS AS REMOVAL OF THE EXCESSIVE BUILDUP OF SILT, STRAIGHTENING AND TIGHTENING OF THE SCREEN, OR ANY OTHER SUCH MEASURE DEEMED NECESSARY. FAILURE OF A SILT SCREEN SHALL BE CONSTRUED TO MEAN THAT THE SILT SCREEN IS NO LONGER CAPABLE OF FUNCTIONING TO TRAP SEDIMENT DUE TO A RIP, TEAR, OVERTOPPING BY SEDIMENT, BIODEGRADATION, CONSTRUCTION ACCIDENT, OR ANY OTHER SUCH MEANS. WHEN A SILT SCREEN IS DEEMED BY THE ENGINEER TO HAVE FAILED, IT SHALL BE IMMEDIATELY REPLACED WITH NEW SILT SCREEN WITHIN THE LIMITS DIRECTED BY THE ENGINEER. PREVENTATIVE MAINTENANCE OF THE SLIT SCREEN SHALL BE ACCOMPLISHED BY WEEKLY INSPECTION FOR SIGNS OF DETERIORATION OR FAILURE DURING PERIODS OF NO RAINFALL EVENT.

MAINTENANCE OF HAY BALES:
HAY BALES SHALL BE INSPECTED AFTER EACH RAINFALL EVENT FOR SIGNS OF DETERIORATION OR FAILURE. DETERIORATION OF A HAY BALE SCREEN SHALL BE CONSTRUED TO MEAN THAT THE HAY BALE SCREEN HAS LIMITED EFFECTIVENESS OR CAPACITY FOR THE FUNCTION OF TRAPPING SEDIMENT, DUE TO PROBLEMS SUCH AS, BUT NOT LIMITED TO, EXCESSIVE BUILDUP OF SEDIMENT OR CONSTRUCTION ACCIDENT. WHEN A HAY BALE SCREEN BECOMES DETERIORATED, IT SHALL BE IMMEDIATELY REMEDIED AT THE DIRECTION OF THE ENGINEER BY SUCH MEANS AS REMOVAL OF THE EXCESSIVE BUILDUP OF SILT, STRAIGHTENING AND REALIGNING OF THE SCREEN, OR ANY OTHER SUCH MEASURE DEEMED NECESSARY. FAILURE OF A HAY BALE SCREEN SHALL BE CONSTRUED TO MEAN THAT THE HAY BALE SCREEN IS NO LONGER CAPABLE OF FUNCTIONING TO TRAP SEDIMENT DUE TO OVERTOPPING BY SEDIMENT, BIODEGRADATION, CONSTRUCTION ACCIDENT, OR ANY OTHER SUCH MEANS. WHEN A HAY BALE SCREEN IS DEEMED BY THE ENGINEER TO HAVE FAILED, IT SHALL BY IMMEDIATELY REPLACED WITH A NEW HAY BALE SCREEN WITHIN THE LIMITS DIRECTED BY THE ENGINEER. PREVENTATIVE MAINTENANCE OF THE HAY BALE SCREEN SHALL BE ACCOMPLISHED BY WEEKLY INSPECTION FOR SIGNS OF DETERIORATION OR FAILURE DURING PERIODS OF NO RAINFALL EVENT.

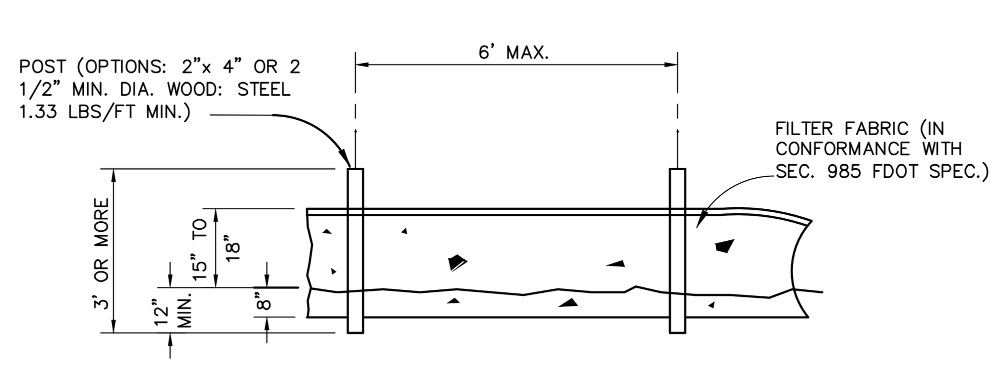

ELEVATION

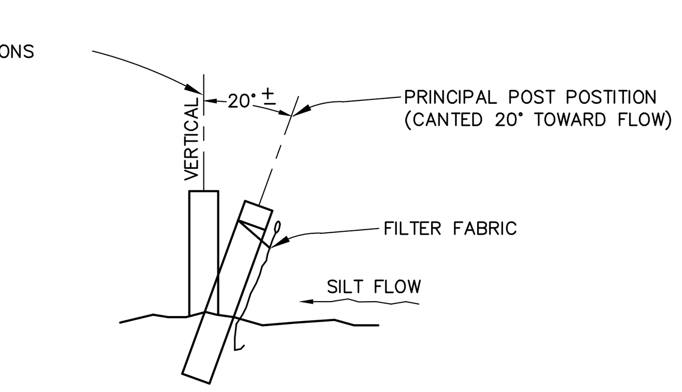

SECTION

TYPE III SILT FENCE

D.O.T. INDEX #102 N.T.S.

SOUTHWEST FLORIDA WATER MANAGEMENT DISTRICT CERTIFICATION

CONSTRUCTION SURFACE WATER MANAGEMENT PLAN (CSWMP)
ASTURIA PHASE 2.

1. THE CSWMP CONSISTS OF PLAN SHEETS 7 AND 8 SHOWING EROSION PROTECTION DEVICES TO BE UTILIZED ON–SITE OF THE PROJECT AND PLANS SHEETS 15, 16 AND 17 FOR OFF–SITE PONDS.

2. THE APPLICANT/OWNER OR AUTHORIZED AGENT HAS REVIEWED THE CSWMP AND HAS SIGNED THE CSWMP WHERE REQUIRED BELOW.

3. THE CSWMP SHALL BE PART OF THE FINAL CONSTRUCTION PLANS FOR THE PERMITTED SURFACE WATER MANAGEMENT SYSTEM.

SIGNATURE: ______________________________

NAME: ______________________________ DATE: ______________

APPLICANT ☐ OWNER ☐ AUTHORIZED AGENT ☐

I CERTIFY UNDER PENALTY OF LAW THAT THIS DOCUMENT AND ALL ATTACHMENTS WERE PREPARED UNDER MY DIRECTION OR SUPERVISION IN ACCORDANCE WITH A SYSTEM DESIGNED TO ASSURE THAT QUALIFIED PERSONNEL PROPERLY GATHERED AND EVALUATED THE INFORMATION SUBMITTED. BASED ON MY INQUIRY OF THE PERSON OR PERSONS WHO MANAGE THE SYSTEM, OR THOSE PERSONS DIRECTLY RESPONSIBLE FOR GATHERING THE INFORMATION, THE INFORMATION SUBMITTED IS, TO THE BEST OF MY KNOWLEDGE AND BELIEF, TRUE, ACCURATE, AND COMPLETE. I AM AWARE THAT THERE ARE SIGNIFICANT PENALTIES FOR SUBMITTING FALSE INFORMATION, INCLUDING THE POSSIBILITY OF FINE AND IMPRISONMENT FOR KNOWING VIOLATIONS.

______________________________ ______________
NAME (OPERATOR AND/OR RESPONSIBLE AUTHORITY) DATE

NAME	TITLE	COMPANY NAME, ADDRESS AND PHONE NUMBER	DATE
*			

I CERTIFY UNDER PENALTY OF LAW THAT I UNDERSTAND, AND SHALL COMPLY WITH, THE TERMS AND CONDITIONS OF THE STATE OF FLORIDA GENERIC PERMIT FOR STORMWATER DISCHARGE FROM LARGE AND SMALL CONSTRUCTION ACTIVITIES AND THIS STORMWATER POLLUTION PREVENTION PLAN PREPARED THEREUNDER.

* NPDES CONTRACTOR AND SUBCONTRACTOR CERTIFICATION TO BE COMPLETED AFTER CONTRACTORS HAVE BEEN SELECTED.

1. SITE DESCRIPTION

A. PROJECT DESCRIPTION:

THE DEVELOPER / APPLICANT PROPOSES TO CONSTRUCT A NEW SUBDIVISION LOCATED IN PASCO COUNTY, FLORIDA. CONSTRUCTION WILL CONSIST OF CLEARING, GRUBBING, EARTHWORK, INSTALLATION OF THE INFRASTRUCTURE, BACK FILLING, PAVING AND GRADING.

B. MAJOR SOIL DISTURBING ACTIVITIES:

SOIL DISTURBING ACTIVITIES FOR THIS PROJECT WILL INCLUDE CLEARING, GRUBBING, EARTHWORK, INSTALLATION OF PAVING, DRAINAGE AND SANITARY STRUCTURES, WATER MAIN INSTALLATION BACK FILLING AND GRADING.

THE CONTRACTOR WILL BE RESPONSIBLE FOR PROVIDING TEMPORARY OR PERMANENT STABILIZATION AS SOON AS POSSIBLE FOR AREAS OF THE SITE WHERE CONSTRUCTION ACTIVITIES HAVE CEASED, BUT IN NO CASE SHALL THE TIME BE GREATER THAN FOURTEEN (14) CALENDAR DAYS.

C. TOTAL PROJECT AREA: 166.612± ACRES

THE PROJECT CONSISTS OF THE CONSTRUCTION OF APPROXIMATELY 168 RESIDENTIAL LOTS, ASPHALT PAVEMENT, CURB AND GUTTER, DRIVEWAY CONNECTIONS AND ACCESS ROADS, A CLOSED SANITARY SEWER SYSTEM, WATER MAINS FOR POTABLE WATER, AND FIRE PROTECTION AND A STORMWATER COLLECTION SYSTEM, AND CONVEYANCE PIPES TO THE SURFACE WATER MANAGEMENT SYSTEM LOCATED ONSITE.

D. TOTAL AREA TO BE DISTURBED: 67.47± ACRES

IT SHALL BE THE INTENT OF THE CONTRACTOR TO MINIMIZE THE ACREAGES OF DISTURBED SOIL IN THE PROJECT AREA AT ALL TIMES.

E. (1) RUNOFF COEFFICIENTS BEFORE CW(B), DURING CW(D) AND AFTER CW(A) CONSTRUCTION:

RUNOFF COEFFICIENT FOR:
OPEN SPACE: C = 0.20
IMPERVIOUS SURFACES: C = 0.95
DISTURBED AREAS, EXPOSED SOIL ETC. DURING CONST.: C = 0.40

WEIGHTED RUNOFF COEFFICIENT:
CW(B): 0.20
CW(D): 0.40
CW(A): 0.60

THE SITE CONSISTS OF NATURAL TREED AREAS AND CATTLE GRAZING.

2. CONTROLS
NARRATIVE – SEQUENCE OF SOIL DISTURBING ACTIVITIES AND IMPLEMENTATION OF CONTROLS:

CONSTRUCTION ACTIVITIES – GENERAL

CONSTRUCTION ACTIVITIES ON THIS PROJECT CONSIST OF CLEARING, GRUBBING, EARTHWORK, INSTALLATION OF THE INFRASTRUCTURE, BACK FILLING AND GRADING. ALL ITEMS REPRESENTED IN THE FOLLOWING DISCUSSION ARE TREATED IN DETAIL IN THE CONSTRUCTION DRAWINGS AND PROJECT SPECIFICATIONS, "FLORIDA DEPARTMENT OF TRANSPORTATION STANDARD SPECIFICATIONS FOR ROAD AND BRIDGE CONSTRUCTION", OR WILL BE IMPLEMENTED BY THE CONTRACTOR'S REPRESENTATIVE IN A MANNER APPROPRIATE TO ENVIRONMENTALLY SENSITIVE CONSTRUCTION PRACTICES AND AS APPROVED BY THE OWNER.

THE CONTRACTOR WILL BE REQUIRED TO PREPARE A SITE SPECIFIC EROSION CONTROL PLAN. THE CONTRACTOR WILL ALSO BE REQUIRED TO MODIFY THE PLAN OR MATERIALS DURING CONSTRUCTION TO ADAPT TO SEASONAL VARIATIONS.

OFF–SITE RUNOFF SHOULD BE DIVERTED AWAY OR THROUGH THE CONSTRUCTION AREA. THIS ADDITIONAL FLOW IF NOT DIVERTED, CAN ADD VOLUME AND SIZE TO STRUCTURAL PRACTICES, REQUIRING MORE FREQUENT MAINTENANCE AND LIMITING EFFECTIVENESS OF EROSION AND SEDIMENT CONTROLS.

COMPLIANCE WITH THE STORMWATER POLLUTION PREVENTION PLAN IS A REQUIREMENT OF THE PROJECT CONTRACT DOCUMENTS. CONSTRUCTION–RELATED INFORMATION REQUIRED BY THE NPDES PERMIT BUT NOT SPECIFICALLY INDICATED IN THE STORMWATER POLLUTION PREVENTION PLAN CAN BE FOUND IN THE CONTRACT DOCUMENTS.

THE CONTRACTOR WILL BE RESPONSIBLE FOR PROVIDING A STABILIZED CONSTRUCTION ENTRANCE FOR VEHICLES ENTERING OR EXITING ONTO PUBLIC ROADS. THE CONTRACTOR'S REPRESENTATIVE SHALL BE RESPONSIBLE FOR MONITORING THE SYSTEM AND MODIFYING THE SYSTEM OR PROCEDURES AS NEEDED.

CONSTRUCTION ACTIVITIES

PRIOR TO COMMENCEMENT, THE CONTRACTOR SHALL PROVIDE A DETAILED CONSTRUCTION SCHEDULE TO INDICATE DATES OF MAJOR GRADING ACTIVITIES AND DETERMINE SEQUENCING OF TEMPORARY AND PERMANENT SOIL DISTURBING ACTIVITIES ON ALL PORTIONS OF THE SITE.

PRIOR TO THE BEGINNING OF ANY PHASE, THE CONTRACTOR SHALL INSTALL EROSION AND SEDIMENT CONTROL ITEMS AS DESCRIBED IN THE CONSTRUCTION DRAWINGS.

THE CONTRACTOR IS RESPONSIBLE FOR PROVIDING SEEDING, MULCHING AND WATER AS SOON AS POSSIBLE FOR AREAS OF THE SITE WHERE CONSTRUCTION HAS TEMPORARILY CEASED BUT IN NO CASE SHALL THE TIME BE GREATER THAN FOURTEEN (14) DAYS.

INSTALLATION OF THE INFRASTRUCTURE AND EARTHWORK, AS SHOWN ON THE PLANS MAY REQUIRE DEWATERING PRIOR TO CONSTRUCTION. THE CONTRACTOR SHALL BE RESPONSIBLE FOR DISCHARGING THE DEWATERING FLOW TO A TEMPORARY SETTLINGS BASIN SUCH AS AREAS CREATED BY STAKED HAY BALES IN DRY GRASSED SWALES OR OTHER SIMILAR SETTLING AREAS, HOWEVER, AT NO TIME SHALL THE CONTRACTOR DISCHARGE DEWATERING FLOW DIRECTLY TO WETLAND AREAS.

EROSION AND SEDIMENT CONTROLS SHALL BE MAINTAINED THROUGHOUT CONSTRUCTION AND MAY BE REMOVED ONLY WHEN PERMANENT STABILIZATION IS ESTABLISHED AND THE OWNER APPROVES THE REMOVAL.

A. EROSION AND SEDIMENT CONTROLS:

(1) STABILIZATION PRACTICES TO BE IMPLEMENTED:

STABILIZATION MEASURES SHALL BE INITIATED AS SOON AS PRACTICABLE IN PORTIONS OF THE SITE WHERE CONSTRUCTION ACTIVITIES HAVE TEMPORARILY OR PERMANENTLY CEASED, BUT IN NO CASE SHALL THE TIME BE GREATER THAN FOURTEEN (14) DAYS AFTER THE CONSTRUCTION ACTIVITY HAS TEMPORARILY OR PERMANENTLY CEASED. ALL DISTURBED AREAS WILL BE SEEDED AND MULCHED OR SODDED FOLLOWING CONSTRUCTION.

(2) STRUCTURAL PRACTICES WILL INCLUDE:

ROCK BEDDING AT CONSTRUCTION EXIT
STAKED SILT FENCES

B. OTHER CONTROLS:

(1) WASTE DISPOSAL:

THE CONTRACTOR WILL PROVIDE LITTER CONTROL AND COLLECTION WITHIN THE PROJECT BOUNDARIES DURING CONSTRUCTION ACTIVITIES. ALL FERTILIZER, HYDROCARBON, OR OTHER CHEMICAL CONTAINERS SHALL BE DISPOSED OF BY THE CONTRACTOR ACCORDING TO EPA'S STANDARD PRACTICES AS DETAILED BY THE MANUFACTURER. NO SOLID MATERIALS INCLUDING BUILDING AND CONSTRUCTION MATERIALS SHALL BE DISCHARGED TO WETLANDS OR BURIED ON–SITE.

(2) OFF–SITE VEHICLE TRACKING:

OFF–SITE VEHICLE TRACKING WILL BE CONTROLLED BY THE FOLLOWING METHODS:

LOADED HAUL TRUCKS TO BE COVERED WITH TARPAULIN.
EXCESS DIRT ON ROAD REMOVED DAILY.
STABILIZED CONSTRUCTION ENTRANCE.

THE CONTRACTOR SHALL BE RESPONSIBLE FOR CONSTRUCTING AND MAINTAINING STABILIZED CONSTRUCTION ENTRANCES WHEN ENTERING OR EXITING ONTO PUBLIC ROAD. THE CONTRACTOR'S REPRESENTATIVE SHALL BE RESPONSIBLE FOR MODIFYING THE SYSTEM OR PROCEDURES AS NEEDED AND AS APPROVED BY THE OWNER.

(3) SANITARY WASTE:

ALL SANITARY WASTE WILL BE COLLECTED FROM PORTABLE UNITS BY A LICENSED SANITARY WASTE MANAGEMENT CONTRACTOR AS REQUIRED BY STATE REGULATION.

(4) FERTILIZERS AND PESTICIDES:

FERTILIZERS AND SOIL STERILIZERS WILL BE USED ON THIS PROJECT IN ACCORDANCE WITH THE PROJECT SPECIFICATIONS AT THE DISCRETION OF THE CONTRACTOR WITH COORDINATION OF THE OWNER.

(5) NON–STORMWATER DISCHARGE (INCLUDING SPILL REPORTING):

A. THE CONTRACTOR WILL PROVIDE THE DEVELOPER / APPLICANT WITH AN EROSION CONTROL PLAN THAT WILL INCLUDE SPILL REPORTING AND RESPONSE.

B. APPROVED STATE, LOCAL PLANS, OR STORMWATER PERMITS:
SEE ATTACHED PERMITS.

(6) STORAGE, APPLICATION, GENERATION, AND MITIGATION OF TOXIC SUBSTANCES:

(A) ALL TOXIC SUBSTANCES ARE TO BE STORED, APPLIED, GENERATED, OR MITIGATED IN ACCORDANCE WITH THE CRITERIA OF THE APPROPRIATE REGULATORY AGENCIES.

3. MAINTENANCE:

GENERAL

THE CONTRACTOR WILL BE RESPONSIBLE FOR MAINTENANCE AND REPAIRS OF EROSION AND SEDIMENT CONTROL DEVICES AND REMOVAL OF EROSION AND SEDIMENT CONTROL DEVICES AFTER THE NOTICE OF TERMINATION.

MAINTENANCE AND REPAIR REQUIRED FOR THE CONTROL AND ABATEMENT OF EROSION AND WATER POLLUTION SHALL BE INCLUDED IN THE COST OF PAY ITEMS FOR THIS PROJECT.

THE CONTRACTOR SHALL MAINTAIN RAIN GAUGES ON THE PROJECT SITE AND RECORD WEEKLY RAINFALL. ALL CONTROL MEASURES WILL BE MAINTAINED DAILY BY THE CONTRACTOR.

ALL MEASURES WILL BE MAINTAINED IN GOOD WORKING ORDER. IF A REPAIR IS NECESSARY, IT WILL BE INITIATED WITHIN 24 HOURS OF REPORT.

STRUCTURAL PRACTICES AND CONTROLS:

THE FOLLOWING PRACTICES WILL BE USED TO MAINTAIN EROSION AND SEDIMENT CONTROLS:

BUILT–UP SEDIMENT WILL BE REMOVED FROM SILT FENCE WHEN IT HAS REACHED ONE–THIRD THE HEIGHT OF THE FENCE.

TEMPORARY AND PERMANENT SEEDING AND PLANTING WILL BE INSPECTED FOR BARE SPOTS, WASHOUTS, AND HEALTHY GROWTH.

STABILIZED CONSTRUCTION ENTRANCES SHALL BE MAINTAINED TO PREVENT CLOGGING OF ROCK BEDDING WHICH MAY IMPEDE THE USEFULNESS OF THE STRUCTURE.

4. INSPECTION:

THE CONTRACTOR'S DAILY INSPECTIONS REQUIRED FOR THE CONTROL AND ABATEMENT OF EROSION AND WATER POLLUTION SHALL BE INCLUDED IN THE COST OF THE PAY ITEMS FOR THIS PROJECT.

ALL EROSION AND WATER POLLUTION ABATEMENT AND CONTROL MEASURES WILL BE INSPECTED DAILY BY THE CONTRACTOR.

THE CONTRACTOR SHALL USE THE CONSTRUCTION INSPECTION REPORT FORM (SEE ATTACHED) FOR DAILY INSPECTIONS.

5. TRACKING AND REPORTING:

REQUIRED INSPECTIONS MUST OCCUR AT LEAST ONCE PER WEEK AND WITHIN 24 HOURS OF THE END OF A STORM EVENT THAT IS 0.50 INCHES OR GREATER. AN INSPECTION REPORTING FORM HAS BEEN PROVIDED TO THE OWNER/DEVELOPER.

THE CONTRACTOR SHALL SUBMIT A WEEKLY REPORT TO THE DEVELOPER / APPLICANT DOCUMENTING THE DAILY INSPECTIONS AND MAINTENANCE OR REPAIRS TO THE EROSION AND SEDIMENT CONTROL DEVICES.

THE DEVELOPER / APPLICANT OR ITS REPRESENTATIVES SHALL MAINTAIN ALL REQUIRED RECORDS SUBMITTED BY THE CONTRACTOR AND COMPLETE ALL SWPPP INSPECTION REPORT FORMS REQUIRED FOR THE NPDES PERMIT.

PREPARATION OF THE CONTRACTOR'S WEEKLY REPORTS OF INSPECTIONS, MAINTENANCE AND REPAIRS, REQUIRED FOR THE CONTROL AND ABATEMENT OF EROSION AND WATER POLLUTION, SHALL BE INCLUDED IN THE COST OF THE PAY ITEMS FOR THIS PROJECT.

PAUL E. SKIDMORE LICENSE NO. 39631 STATE OF FLORIDA PROFESSIONAL ENGINEER

JOB NO.	EPN	DATE	DESIGNED	DRAWN	CHECKED	Q.C.
506-100F	213	10-1-2015	RAH	RAH	PES	

REVISIONS: NO. | DATE | APP'D BY

DESIGNED FOR
ASTURIA COMMUNITY DEVELOPMENT DISTRICT
605 PALENCIA CLUB DRIVE, ST. AUGUSTINE, FLORIDA 32095
PHONE: (904) 810-0500 - FAX: (904) 810-0525 - E-MAIL: sean.manson@hines.com

PROJECT NAME
Asturia PHASE 2

SHEET NAME
OVERALL DRAINAGE AND STORMWATER POLLUTION PREVENTION PLAN (2)

ENGINEER / SURVEYOR
FLORIDA DESIGN CONSULTANTS, INC.
— THINK IT. ACHIEVE IT. —
3030 STARKEY BOULEVARD, NEW PORT RICHEY, FLORIDA 34655
PHONE: (800) 532 - 1047 FAX: (727) 848 - 3648 WWW.FLDESIGN.COM C.A. NO. 7421
E-MAIL: pskidmore@fldesign.com

PLAN SET DATE
October 7, 2015

©Copyright 2015 Florida Design Consultants, Inc. Drawings and concepts may not be used or reproduced without written permission.

K:\213\ProjData\ConstDocs\Plans\Phase 2\213_ASTURIA-PH2-POADRAINAGE-2.dwg - Oct 20, 2015 @ 1:24pm - rhall

LEGEND

- = Overland Flow Direction
- = Swale Flow Direction
- = Concentrated Drainage Flow Direction
- A 52.68 = Lot Grading Type & Min. Finish Floor Elev.
- = Proposed Grading Pad Contour
- 17 = Proposed Storm Structure Number
- +42.1 = Proposed Spot Elevation
- +6.17 = Existing Spot Elevation
- = Proposed Storm Structure & Pipe
- (TA) = Existing Tree to be Removed
- (TA) = Existing Tree to Remain
- = Proposed Silt Fence
- = Proposed Double Silt Fence
- = Floating Turbidity Barrier
- = Wetland/Surface Water Line
- = FEMA
- = Future Sidewalk By Home Builder
- = Sidewalk/Path Constructed By Developer
- = Buffer Enhancement Area
- = Buffer Encroachment
- = Limits of Wetland Impact
- = Limits of Surface Water Impact
- = Outfall Rip Rap

N

0 25 50 100

STRUCTURE NO. FROM	TO	HIGHEST GROUND EL.	LOWEST INV. EL.	DEPTH (FT.)	PIPE SIZE O.D FT.	REQUIRED EASEMENT (FT)	PROVIDED EASEMENT (FT)
244	245	50.5	43.4	3.8	3.7	21.3	25.0
246A	246	50.9	42.0	5.4	3.7	24.5	25.0

EASEMENT WIDTH TABLE

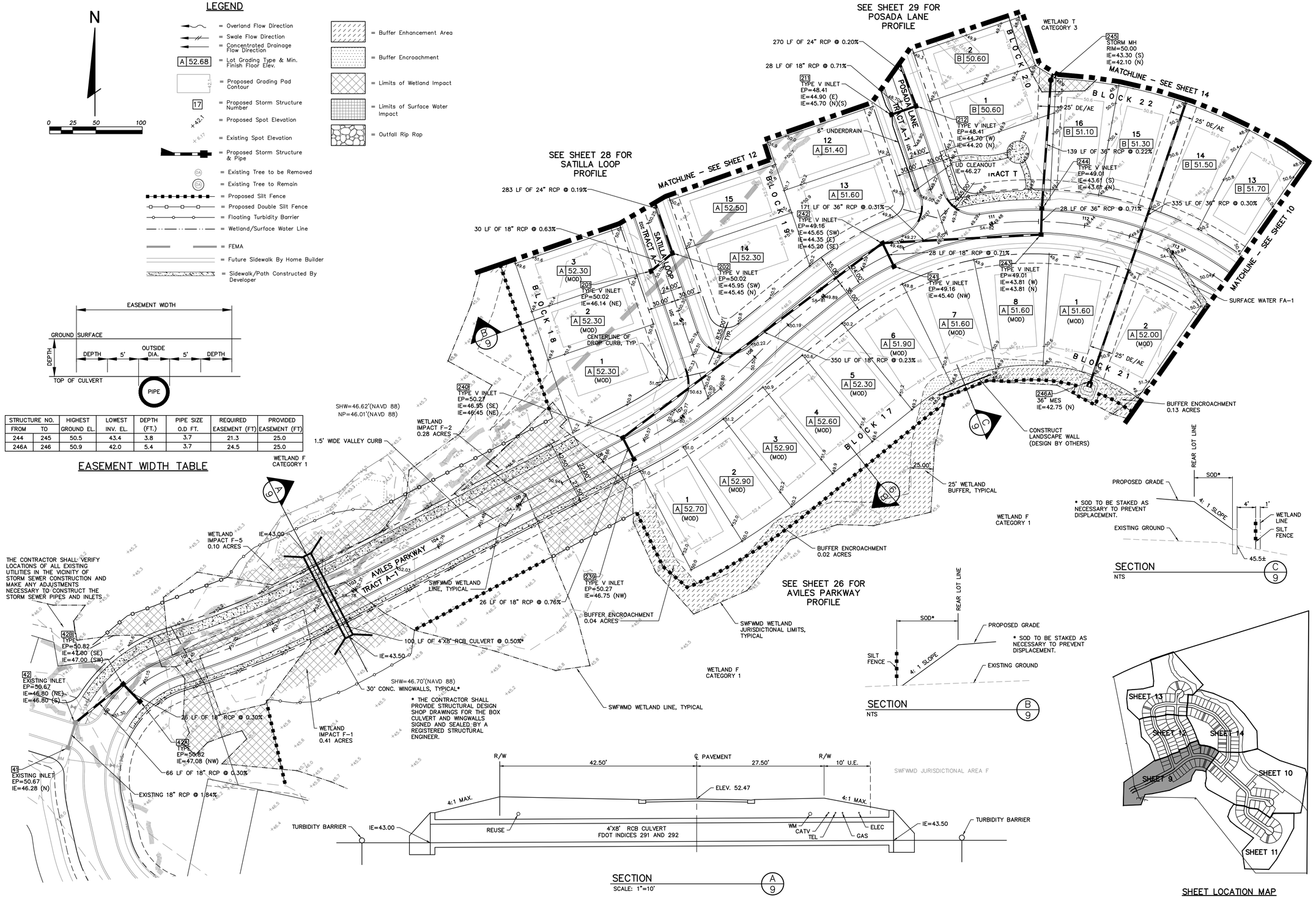

SECTION (A 9) — SCALE: 1"=10'

SECTION (B 9) — NTS

SECTION (C 9) — NTS

SHEET LOCATION MAP

PAUL E. SKIDMORE LICENSE NO. 39631 STATE OF FLORIDA PROFESSIONAL ENGINEER

JOB NO.	EPN	DATE	DESIGNED	DRAWN	CHKD.
506-100F	213	10-1-2015	RAH	RAH	PES

NO.	DATE	REVISIONS	APPR. BY

DESIGNED FOR: **ASTURIA COMMUNITY DEVELOPMENT DISTRICT**
5050 PALMONA CLUB DRIVE, ST. AUGUSTINE, FLORIDA 32092
PHONE: (904) 810-0500 - FAX: (904) 810-0525 - E-MAIL: paulskidmore@bellsouth.net

PROJECT NAME: Asturia

SHEET NAME: **PAVING, GRADING, AND DRAINAGE PLANS (1)** — **PHASE 2**

ENGINEER / SURVEYOR

FLORIDA DESIGN CONSULTANTS, INC.
— THINK IT. ACHIEVE IT. —
3030 STARKEY BOULEVARD, NEW PORT RICHEY, FLORIDA 34655
PHONE: (800) 532 - 1047 FAX: (727) 848 - 3648 WWW.FLDESIGN.COM C.A. NO. 7421
E-MAIL: pskidmore@fldesign.com

PLAN SET DATE: October 7, 2015

SHEET 9 OF 52

©Copyright 2015 Florida Design Consultants, Inc. Drawings and concepts may not be used or reproduced without written permission.

K:\2013\Proj\Data\Cross\Docs\Plans\Phase 2\213_ASTURIA-PH2-PROG-1.dwg – Oct 20, 2015 @ 1:24pm – rhall

MATCHLINE – SEE SHEET 14

SEE SHEET 28 FOR SATILLA LOOP PROFILE

MATCHLINE – SEE SHEET 9

235 TYPE V INLET EP=49.07 IE=45.05 (SE) IE=45.05 (SW)

SURFACE WATER FA-1 IMPACT FA-1-1 0.13 ACRES

SATILLA LOOP TRACT A-1

28 LF OF 18" RCP @ 0.71%

234 TYPE V INLET EP=49.07 IE=45.25 (NW)

64 LF OF 18" RCP @ 0.31%

143 LF OF 24" RCP @ 0.21%

BUFFER ENCROACHMENT 0.01 ACRES

236 TYPE V INLET EP=49.46 IE=44.85 (NE) IE=44.35 (SW)

237 STORM MH RIM=49.50 IE=44.05 (NE) IE=42.65 (S)

27 LF OF 24" RCP @ 0.55%

238 24" MES IE=42.50 (N)

POND 3500E

DS-3500E

28 LF OF 24" RCP @ 0.70%

238A 24" MES IE=44.10 (NE)

POND 3500E
T.O.B.=48.70
DHW 25 =48.19
DHW 100 =48.30
N.W.L.=46.70
BOTT=40.7

DS-3500E

INLET TYPE	D
GRATE ELEV.	48.20
WEIR WIDTH	72"
WEIR ELEV.	47.60
WATER QUALITY ORIFICE	0.93" DIA.
WATER QUALITY ORIFICE ELEV.	46.70
PIPE INVERT	45.20

SHEET LOCATION MAP

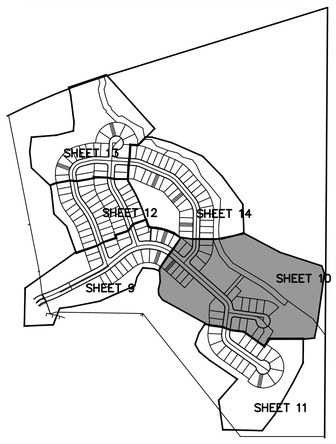

WETLAND F CATEGORY 1

BUFFER ENCROACHMENT 0.03 ACRES

U.D. CLEANOUT IE=47.16

6" UNDER DRAIN

BUFFER ENCROACHMENT 0.02 ACRES

SEE SHEET 26 FOR AVILES PARKWAY PROFILE

BUFFER ENCROACHMENT 0.08 ACRES

AVERAGE BUFER WIDTH = 13.5'

CONSTRUCT LANDSCAPE WALL (DESIGNED BY OTHERS)

BUFFER ENCROACHMENT 0.03 ACRES

TRACT AN

50' WIDE WILDLIFE BUFFER, TYPICAL

WETLAND JURISDICTIONAL LIMITS, TYPICAL

25' WETLAND BUFFER, TYPICAL

SWFWMD WETLAND LINE, TYP.

USACE WETLAND LINE, TYP.

CONSTRUCT 185 LF OF 10' WIDE ELEVATED BOARDWALK (TO BE DESIGNED BY OTHERS)

WETLAND IMPACT F-7 0.06 ACRES

SHW=46.12'(NAVD 88)
NP=45.44'(NAVD 88)

TRACT AM
WETLAND F CATEGORY 1

SHW=46.10'(NAVD 88)

250 24" MES IE=45.10

105 LF OF 24"X38" ERCP @ 0.19%

WETLAND IMPACT F-3 0.27 ACRES

249 STORM MH RIM=47.03 IE=43.95 (SW) IE=42.15 (E)

250A 24" MES IE=43.95 (SW)

25 LF OF 24" RCP @ 0.39%

DS-3490A

SHW=46.17'(NAVD 88)

62 LF OF 24" RCP @ 0.24%

250B 24"X38" MES IE=45.30

TRACT O

250 IE=42.00 (W)

POND 3490A

POND 3490A
T.O.B.=48.30
DHW 25 =47.73
DHW 100 =48.05
N.W.L.=46.34
BOTT=38.0

DS-3490A

INLET TYPE	D
GRATE ELEV.	47.75
WEIR WIDTH	54"
WEIR ELEV.	46.83
WATER QUALITY ORIFICE	1.30" DIA.
WATER QUALITY ORIFICE ELEV.	46.34
PIPE INVERT	45.75

136 LF OF 24" RCP @ 0.22%

248 TYPE V INLET EP=49.05 IE=44.75 (SW) IE=44.25 (NE)

28 LF OF 18" RCP @ 0.71%

247 TYPE V INLET EP=49.05 IE=44.95 (NE) IE=46.34 (NW)(SE)

6" UNDER DRAIN

U.D. CLEANOUT IE=46.62

SEVARES COURT TRACT A-1

CENTERLINE OF DROP CURB, TYP.

253 TYPE V INLET EP=48.37 IE=44.52 (N)

199 LF OF 24" RCP @ 0.23%

252 TYPE V INLET EP=48.37 IE=44.32 (S) IE=43.82 (SE)

76 LF OF 30" RCP @ 0.26%

255 30" MES IE=42.00 (N)

SEE SHEET 30 FOR SEVARES COURT PROFILE

MATCHLINE – SEE SHEET 11

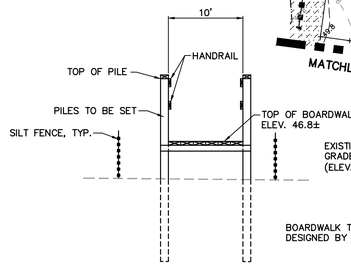

SECTION A/10
NOT TO SCALE

SURFACE WATER FB-2 IMPACT FA-2-1 0.12 ACRES

WETLAND F-2 CATEGORY 3

WETLAND F CATEGORY 1

POND 3510C
T.O.B.=48.40
DHW 25 =47.84
DHW 100 =47.97
N.W.L.=46.85
BOTT=38.50

SHW=46.27'(NAVD 88)
NP=45.51'(NAVD 88)

BUFFER ENCROACHMENT 0.01 ACRES

253 TYPE V INLET EP=48.40 IE=43.36 (NW) IE=43.36 (SE)

74 LF OF 24" RCP @ 0.27%

254 STORM MH RIM=48.60 IE=43.16 (NW) IE=42.20 (S)

POND 3510C

27 LF OF 24" RCP @ 0.74%

255A 24" MES IE=43.10 (W)

DS-3510C

INLET TYPE	D
GRATE ELEV.	47.65
WEIR WIDTH	54"
WEIR ELEV.	47.22
WATER QUALITY ORIFICE	1.51" DIA.
WATER QUALITY ORIFICE ELEV.	46.85
PIPE INVERT	44.20

EASEMENT WIDTH TABLE

STRUCTURE NO. FROM	TO	HIGHEST GROUND EL.	LOWEST INV. EL.	DEPTH (FT.)	PIPE SIZE O.D. FT.	REQUIRED EASEMENT (FT)	PROVIDED EASEMENT (FT)
236	237	50.5	44.2	4.1	2.5	20.7	25.0

EASEMENT WIDTH
GROUND SURFACE
DEPTH
DEPTH
5'
OUTSIDE DIA.
5'
DEPTH
TOP OF CULVERT
PIPE

= Overland Flow Direction
= Swale Flow Direction
= Concentrated Drainage Flow Direction
A 52.68 = Lot Grading Type & Min. Finish Floor Elev.
= Proposed Grading Pad Contour
17 = Proposed Storm Structure Number
+42.1 = Proposed Spot Elevation
= Existing Spot Elevation
= Proposed Storm Structure & Pipe
= Existing Tree to be Removed
= Existing Tree to Remain
= Proposed Silt Fence
= Proposed Double Silt Fence
= Floating Turbidity Barrier
= Wetland/Surface Water Line
= FEMA
= Future Sidewalk By Home Builder
= Sidewalk/Path Constructed By Developer

= Buffer Enhancement Area
= Buffer Encroachment
= Limits of Wetland Impact
= Limits of Surface Water Impact
= Outfall Rip Rap

N
0 25 50 100

PAUL E. SKIDMORE LICENSE NO. 39631 STATE OF FLORIDA PROFESSIONAL ENGINEER

JOB NO.	506-100F
EPN	213
DATE	10-1-2015
DESIGNED	RAH
DRAWN	RAH
CHECKED	PES

NO.	DATE	REVISIONS	APP'D

DESIGNED FOR
ASTURIA COMMUNITY DEVELOPMENT DISTRICT
600 PALENCIA CLUB DRIVE, ST. AUGUSTINE, FLORIDA 32095
PHONE: (904) 810-0500 - FAX: (904) 810-0525 - E-MAIL: sean.mann@dpfmm.com

PROJECT NAME
Asturia | PHASE 2

SHEET NAME
PAVING, GRADING, AND DRAINAGE PLANS (2)

ENGINEER / SURVEYOR
FLORIDA DESIGN CONSULTANTS, INC.
THINK IT. ACHIEVE IT.
3030 STARKEY BOULEVARD, NEW PORT RICHEY, FLORIDA 34655
PHONE: (800) 532 - 1047 FAX: (727) 848 - 3648 WWW.FLDESIGN.COM C.A. NO. 7421
E-MAIL: pskidmore@fldesign.com

PLAN SET DATE
October 7, 2015

SHEET
10 OF 52

© Copyright 2015 Florida Design Consultants, Inc. Drawings and concepts may not be used or reproduced without written permission.

K:\21JV\Proj\Data\CivilDocs\Plans\Phase 2\213_ASTURIA-PH2-PROD-2.dwg - Oct 20, 2015 @ 1:25pm - rhall

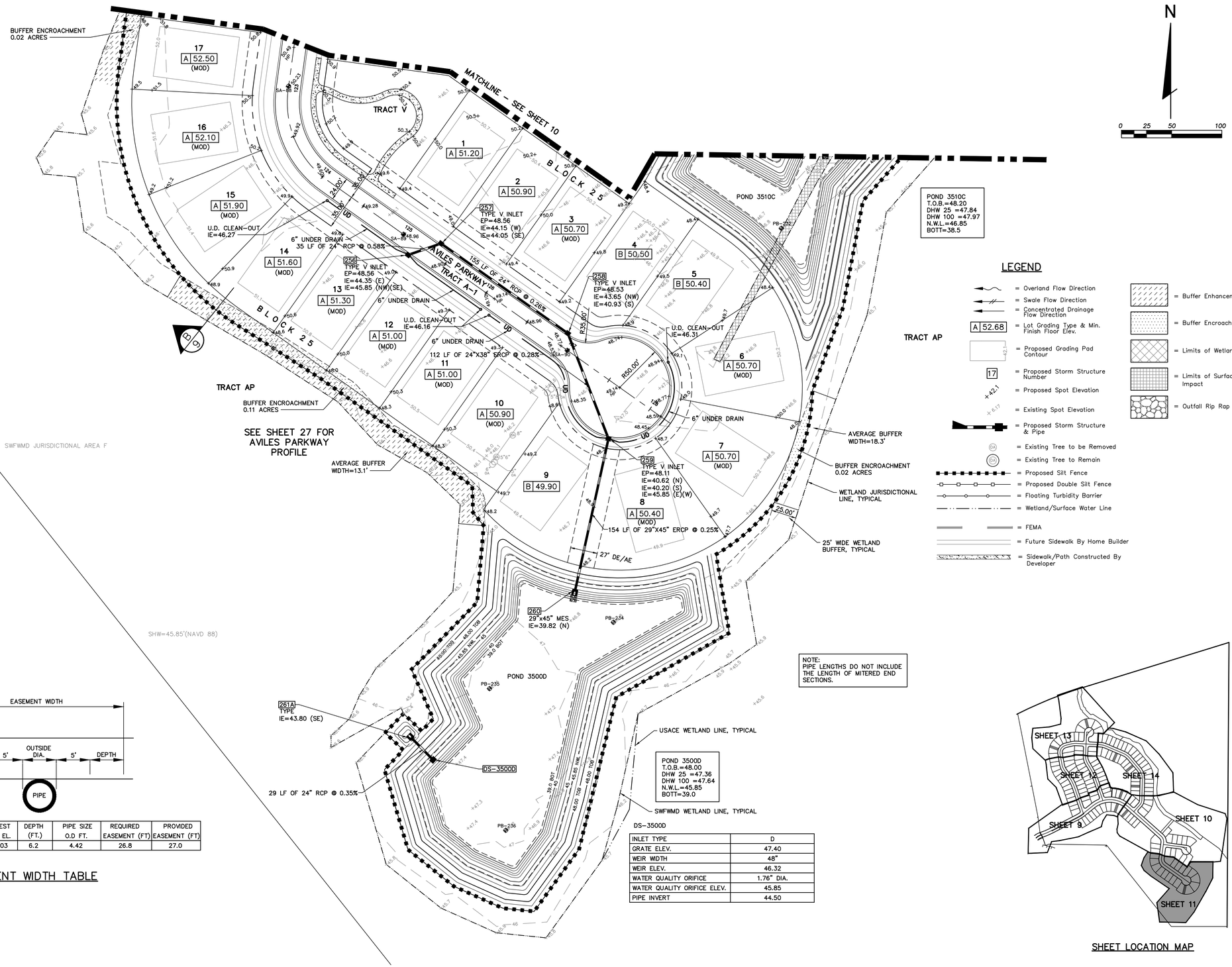

LEGEND

- = Overland Flow Direction
- = Swale Flow Direction
- = Concentrated Drainage Flow Direction
- A 52.68 = Lot Grading Type & Min. Finish Floor Elev.
- = Proposed Grading Pad Contour
- 17 = Proposed Storm Structure Number
- +42.1 = Proposed Spot Elevation
- +6.17 = Existing Spot Elevation
- = Proposed Storm Structure & Pipe
- = Existing Tree to be Removed
- = Existing Tree to Remain
- = Proposed Silt Fence
- = Proposed Double Silt Fence
- = Floating Turbidity Barrier
- = Wetland/Surface Water Line
- = FEMA
- = Future Sidewalk By Home Builder
- = Sidewalk/Path Constructed By Developer
- = Buffer Enhancement Area
- = Buffer Encroachment
- = Limits of Wetland Impact
- = Limits of Surface Water Impact
- = Outfall Rip Rap

TRACT AP

NOTE:
PIPE LENGTHS DO NOT INCLUDE THE LENGTH OF MITERED END SECTIONS.

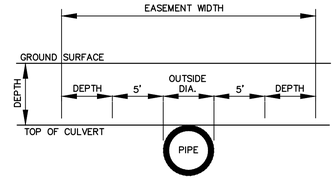

STRUCTURE NO.		HIGHEST	LOWEST	DEPTH	PIPE SIZE	REQUIRED	PROVIDED
FROM	TO	GROUND EL.	INV. EL.	(FT.)	O.D FT.	EASEMENT (FT)	EASEMENT (FT)
259	260	48.9	40.03	6.2	4.42	26.8	27.0

EASEMENT WIDTH TABLE

INLET TYPE	D
GRATE ELEV.	47.40
WEIR WIDTH	48"
WEIR ELEV.	46.32
WATER QUALITY ORIFICE	1.76" DIA.
WATER QUALITY ORIFICE ELEV.	45.85
PIPE INVERT	44.50

DS-3500D

SHEET LOCATION MAP

PAUL E. SKIDMORE
LICENSE
NO. 39631
STATE OF
FLORIDA
PROFESSIONAL ENGINEER

JOB NO.	EPN	DATE	DESIGNED	DRAWN	CHKD.
506-100F	213	10-1-2015	RAH	RAH	PES

NO.	DATE	REVISIONS

DESIGNED FOR
ASTURIA COMMUNITY DEVELOPMENT DISTRICT
2005 PALENCIA CLUB DRIVE, ST. AUGUSTINE, FLORIDA 32095
PHONE: (904) 810-0500 - FAX: (904) 810-0525 - E-MAIL: sean.mamaw@fhnw.com

PROJECT NAME
Asturia

SHEET NAME
PHASE 2
PAVING, GRADING, AND DRAINAGE PLANS (3)

ENGINEER / SURVEYOR
FLORIDA DESIGN CONSULTANTS, INC.
— THINK IT. ACHIEVE IT. —
3030 STARKEY BOULEVARD, NEW PORT RICHEY, FLORIDA 34655
PHONE: (800) 532 - 1047 FAX: (727) 848 - 3648 WWW.FLDESIGN.COM C.A. NO. 7421
E-MAIL: pskidmore@fldesign.com

PLAN SET DATE
October 7, 2015

SHEET
11 OF 52

©Copyright 2015 Florida Design Consultants, Inc. Drawings and concepts may not be used or reproduced without written permission.

K:\213\ProjData\ConstDocs\Plans\Phase 2\213_AS1BIA-PH2-RPGD-1.dwg — Oct 20, 2015 @ 1:26pm — rhall

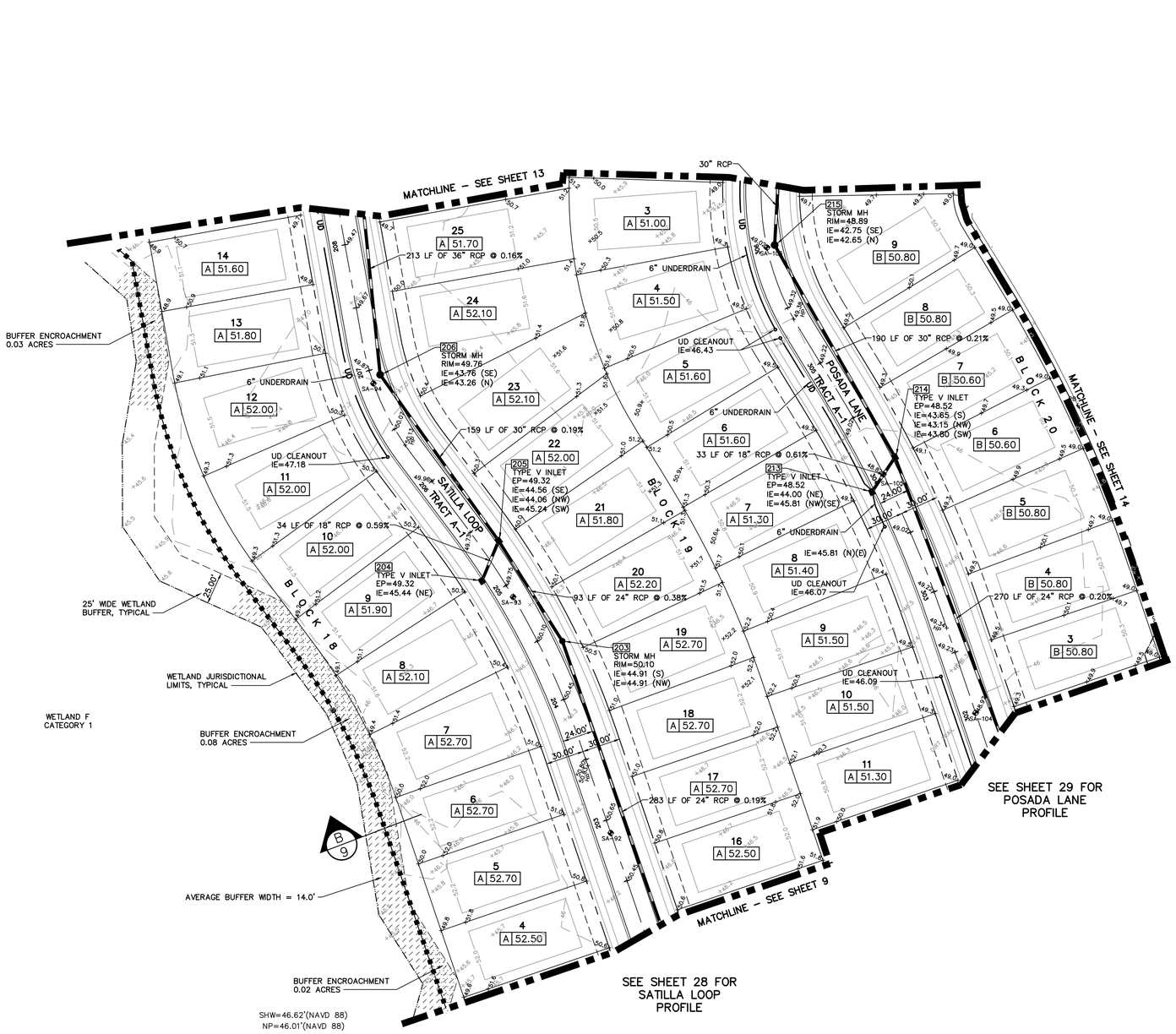

N

0 25 50 100

LEGEND

- = Overland Flow Direction
- = Swale Flow Direction
- = Concentrated Drainage Flow Direction
- A 52.68 = Lot Grading Type & Min. Finish Floor Elev.
- = Proposed Grading Pad Contour
- 17 = Proposed Storm Structure Number
- +42.1 = Proposed Spot Elevation
- +6.17 = Existing Spot Elevation
- = Proposed Storm Structure & Pipe
- = Existing Tree to be Removed
- = Existing Tree to Remain
- = Proposed Silt Fence
- = Proposed Double Silt Fence
- = Floating Turbidity Barrier
- = Wetland/Surface Water Line
- = FEMA
- = Future Sidewalk By Home Builder
- = Sidewalk/Path Constructed By Developer
- = Buffer Enhancement Area
- = Buffer Encroachment
- = Limits of Wetland Impact
- = Limits of Surface Water Impact
- = Outfall Rip Rap

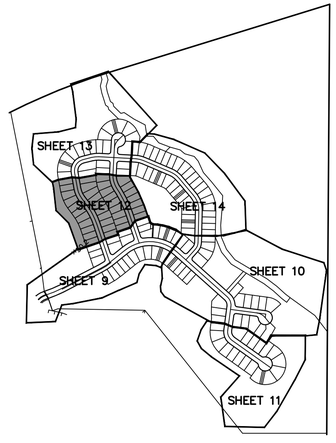

SHEET LOCATION MAP

PAUL E. SKIDMORE LICENSE NO. 39631 STATE OF FLORIDA PROFESSIONAL ENGINEER

JOB NO.	EPN	DATE	DESIGNED	DRAWN	CHECKED	APPD BY
506-100F	213	10-1-2015	RAH	RAH	PES	

NO.	DATE	REVISIONS

DESIGNED FOR
ASTURIA COMMUNITY DEVELOPMENT DISTRICT
605 PALENCIA CLUB DRIVE, ST. AUGUSTINE, FLORIDA 32095
PHONE: (904) 810-0500 - FAX: (904) 810-0525 - E-MAIL: sean.manson@hines.com

PROJECT NAME: Asturia — PHASE 2

SHEET NAME: PAVING, GRADING, AND DRAINAGE PLANS (4)

ENGINEER / SURVEYOR
FLORIDA DESIGN CONSULTANTS, INC.
— THINK IT. ACHIEVE IT. —
3030 STARKEY BOULEVARD, NEW PORT RICHEY, FLORIDA 34655
PHONE: (800) 532 - 1047 FAX: (727) 848 - 3648 WWW.FLDESIGN.COM C.A. NO. 7421
E-MAIL: pskidmore@fldesign.com

PLAN SET DATE
October 7, 2015

SHEET 12 OF 52

©Copyright 2015 Florida Design Consultants, Inc. Drawings and concepts may not be used or reproduced without written permission.

K:\213\Proj\Data\ConstDocs\Plans\Phase 2\213_ASTURIA-PH2-PPGD-4.dwg – Oct 20, 2015 @ 1:26pm – rhall

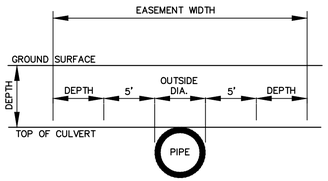

STRUCTURE NO.		HIGHEST	LOWEST	DEPTH	PIPE SIZE	REQUIRED	PROVIDED
FROM	TO	GROUND EL.	INV. EL.	(FT.)	O.D FT.	EASEMENT (FT)	EASEMENT (FT)
209	208	49.9	41.9	4.1	4.3	22.5	25.0
224	223	47.8	40.6	3.3	4.3	20.9	25.0

EASEMENT WIDTH TABLE

POND 3750A
T.O.B.=47.00
DHW 25 =46.35
DHW 100 =46.58
N.W.L.=44.60
BOTT=38.6

DS-3750A

INLET TYPE	H
GRATE ELEV.	46.35
WEIR WIDTH	126"
WEIR ELEV.	45.36
WATER QUALITY ORIFICE	2.06" DIA.
WATER QUALITY ORIFICE ELEV.	44.60
PIPE INVERT	42.30

DS-3740C

INLET TYPE	H
GRATE ELEV.	48.20
WEIR WIDTH	114"
WEIR ELEV.	47.17
WATER QUALITY ORIFICE	1.68" DIA.
WATER QUALITY ORIFICE ELEV.	46.20
PIPE INVERT	43.15

POND 3740C
T.O.B.=48.70
DHW 25 =48.11
DHW 100 =48.32
N.W.L.=46.20
BOTT=38.5

SHW=44.45'(NAVD 88)
NP=43.88'(NAVD 88)

LEGEND

- = Overland Flow Direction
- = Swale Flow Direction
- = Concentrated Drainage Flow Direction
- A 52.68 = Lot Grading Type & Min. Finish Floor Elev.
- = Proposed Grading Pad Contour
- 17 = Proposed Storm Structure Number
- +42.1 = Proposed Spot Elevation
- +6.17 = Existing Spot Elevation
- = Proposed Storm Structure & Pipe
- (24) = Existing Tree to be Removed
- (24) = Existing Tree to Remain
- = Proposed Silt Fence
- = Proposed Double Silt Fence
- = Floating Turbidity Barrier
- = Wetland/Surface Water Line
- = FEMA
- = Future Sidewalk By Home Builder
- = Sidewalk/Path Constructed By Developer
- = Buffer Enhancement Area
- = Buffer Encroachment
- = Limits of Wetland Impact
- = Limits of Surface Water Impact
- = Outfall Rip Rap

PROJECT BOUNDARY
POND 3750A
POND 3740C
DS-3750A
225A TYPE D INLET GE=46.43 IE=42.00 (W) SLOT ELEV=44.00 SLOT IS WIDTH OF INLET INLET IS BOTTOMLESS
50 LF OF 36" RCP @ 0.60%
BUFFER ENCROACHMENT 0.10 ACRES
WETLAND F CATEGORY 1
50' WIDE WILDLIFE BUFFER, TYPICAL
WETLAND JURISDICTIONAL LIMITS, TYPICAL
224 STORM MH RIM=47.50 IE=40.45 (S) IE=39.55 (NW)
225 42" MES
25' WETLAND BUFFER, TYPICAL
21 LF OF 42" RCP @ 0.23%
141 LF OF 42" RCP @ 0.18%
25' DE/AE/UE
BUFFER ENCROACHMENT 0.03 ACRES
BUFFER ENCROACHMENT 0.01 ACRES
BUFFER ENCROACHMENT 0.02 ACRES
BUFFER ENCROACHMENT 0.028 ACRES
210A 36" MES IE=43.00 (SE)
37 LF OF 36" RCP @ 0.41%
210 42" MES IE=42.12 (E)
209 STORM MH RIM=49.50 IE=42.17 (E) IE=42.17 (W)
140 LF OF 42" RCP @ 0.11%
208 TYPE V INLET EP=48.76 IE=42.82 (E) IE=42.32 (W) IE=46.20 (S)
21 LF OF 42" RCP @ 0.24%
6" UNDERDRAIN
207 TYPE V INLET EP=48.76 IE=42.92 (S) IE=42.92 (W)
28 LF OF 36" RCP @ 0.35%
213 LF OF 36" RCP @ 0.16%
222 STORM MH RIM=47.54 IE=42.25 (S) IE=41.25 (N) IE=43.10 (E) IE=43.10 (W)
181 LF OF 30" RCP @ 0.22%
28 LF OF 18" RCP @ 0.71%
UD CLEANOUT IE=45.25
216 TYPE V INLET EP=47.56 IE=43.71 (S) IE=44.85 (W)
217 TYPE V INLET EP=47.56 IE=43.51 (N) IE=43.35 (E) IE=44.85 (E)
63 LF OF 18" RCP @ 0.40%
218 TYPE V INLET EP=47.56 IE=43.71 (S) IE=44.78 (E)
28 LF OF 18" RCP @ 0.71%
224 LF OF 42" RCP @ 0.20%
219 TYPE V INLET EP=47.56 IE=43.90 (E) IE=43.25 (W) IE=43.51 (N)
36 LF OF 18" RCP @ 0.41%
174 LF OF 18" RCP @ 0.35%
CENTERLINE OF DROP CURB, TYP.
TRACT A-1
SATILLA LOOP
POSADA LANE
BLOCK 18
BLOCK 19
BLOCK 20
MATCHLINE - SEE SHEET 12
MATCHLINE - SEE SHEET 14
SEE SHEET 28 FOR SATILLA LOOP PROFILE
SEE SHEET 29 FOR POSADA LANE PROFILE

N
0 25 50 100

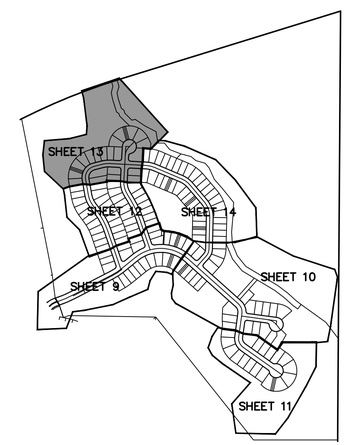

SHEET LOCATION MAP

PAUL E. SKIDMORE LICENSE NO. 39631 STATE OF FLORIDA PROFESSIONAL ENGINEER

JOB NO.	DATE	DRAWN	CHK'D
506-100F	10-1-2015	RAH	PES
EPN	CHECKED	RAH	QUAL.
213			

REVISIONS | NO. | DATE |

DESIGNED FOR
ASTURIA COMMUNITY DEVELOPMENT DISTRICT
600 PALAFOX CLUB DRIVE, ST. AUGUSTINE, FLORIDA 32095
PHONE: (904) 810-0500 - FAX: (904) 810-0525 - E-MAIL: sean.mcmanus@ghnet.com

PROJECT NAME
Asturia | PHASE 2

SHEET NAME
PAVING, GRADING, AND DRAINAGE PLANS (5)

ENGINEER / SURVEYOR
FLORIDA DESIGN CONSULTANTS, INC.
— THINK IT. ACHIEVE IT. —
3030 STARKEY BOULEVARD, NEW PORT RICHEY, FLORIDA 34655
PHONE: (800) 532 - 1047 FAX: (727) 848 - 3648 WWW.FLDESIGN.COM C.A. NO. 7421
E-MAIL: pskidmore@fldesign.com

PLAN SET DATE
October 7, 2015

SHEET 13 OF 52

©Copyright 2015 Florida Design Consultants, Inc. Drawings and concepts may not be used or reproduced without written permission.

K:\213\Projects\ConstDocs\Plans\Phase 2\213_ASTURIA-PH2-PROD-5.dwg - Oct 20, 2015 @ 1:27pm - rhall

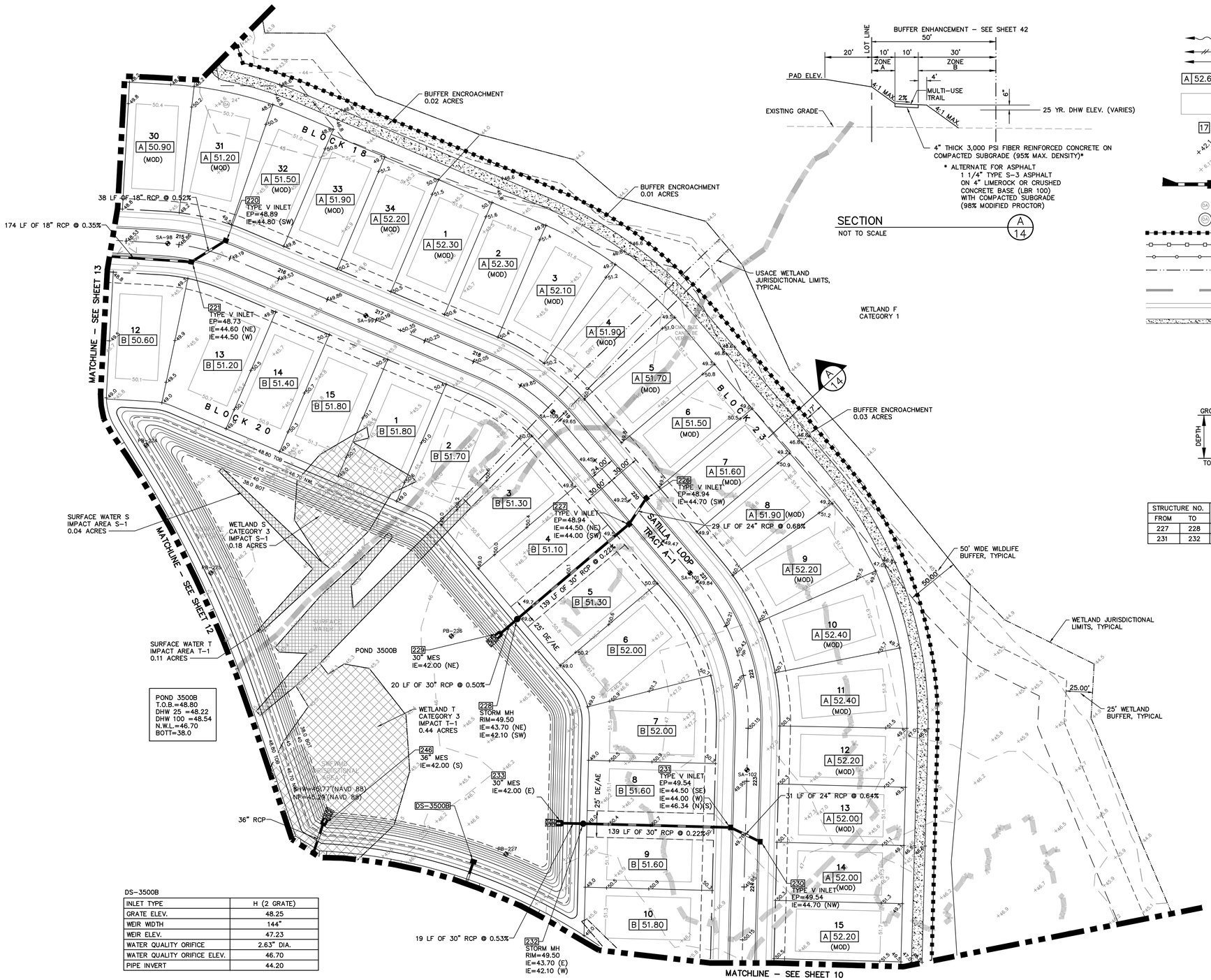

SECTION
NOT TO SCALE
A/14

LEGEND

- = Overland Flow Direction
- = Swale Flow Direction
- = Concentrated Drainage Flow Direction
- A 52.68 = Lot Grading Type & Min. Finish Floor Elev.
- = Proposed Grading Pad Contour
- 17 = Proposed Storm Structure Number
- +42.1 = Proposed Spot Elevation
- +6.77 = Existing Spot Elevation
- = Proposed Storm Structure & Pipe
- (EM) = Existing Tree to be Removed
- (EM) = Existing Tree to Remain
- = Proposed Silt Fence
- = Proposed Double Silt Fence
- = Floating Turbidity Barrier
- = Wetland/Surface Water Line
- = FEMA
- = Future Sidewalk By Home Builder
- = Sidewalk/Path Constructed By Developer
- = Buffer Enhancement Area
- = Buffer Encroachment
- = Limits of Wetland Impact
- = Limits of Surface Water Impact
- = Outfall Rip Rap

N

0 25 50 100

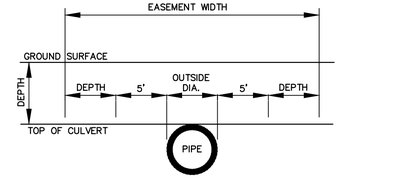

STRUCTURE NO. FROM	STRUCTURE NO. TO	HIGHEST GROUND EL.	LOWEST INV. EL.	DEPTH (FT.)	PIPE SIZE O.D FT.	REQUIRED EASEMENT (FT)	PROVIDED EASEMENT (FT)
227	228	50.1	43.8	3.5	3.08	20.1	25.0
231	232	50.7	43.8	4.1	3.08	21.3	25.0

EASEMENT WIDTH TABLE

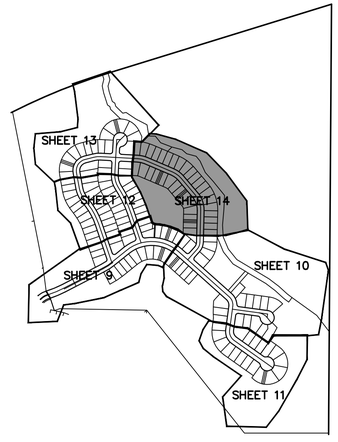

SHEET LOCATION MAP

SEE SHEET 28 FOR SATILLA LOOP PROFILE

PAUL E. SKIDMORE LICENSE NO. 39631 STATE OF FLORIDA PROFESSIONAL ENGINEER

JOB NO.	EPN	DATE	DRAWN	CHECKED	DESIGNED	APPVD
506-100F	213	10-1-2015	RAH	RAH		PES

DESIGNED FOR
ASTURIA COMMUNITY DEVELOPMENT DISTRICT
600 PALENCIA CLUB DRIVE, ST. AUGUSTINE, FLORIDA 32095
PHONE: (904) 810-0500 - FAX: (904) 810-0525 - E-MAIL: sean.mann@dpfmm.com

PROJECT NAME: Asturia | PHASE 2

SHEET NAME: **PAVING, GRADING, AND DRAINAGE PLANS (6)**

REVISIONS | NO. | DATE

ENGINEER / SURVEYOR
FLORIDA DESIGN CONSULTANTS, INC.
THINK IT. ACHIEVE IT.
3030 STARKEY BOULEVARD, NEW PORT RICHEY, FLORIDA 34655
PHONE: (800) 532 - 1047 FAX: (727) 848 - 3648 WWW.FLDESIGN.COM C.A. NO. 7421
E-MAIL: pskidmore@fldesign.com

PLAN SET DATE: October 7, 2015

SHEET 14 OF 52

© Copyright 2015 Florida Design Consultants, Inc. Drawings and concepts may not be used or reproduced without written permission.

K:\21JPro\Data\CivilDocs\Plans\Phase 2\213_ASTURIA-PH2-PP2D-6.dwg - Oct 20, 2015 @ 1:27pm - rhall

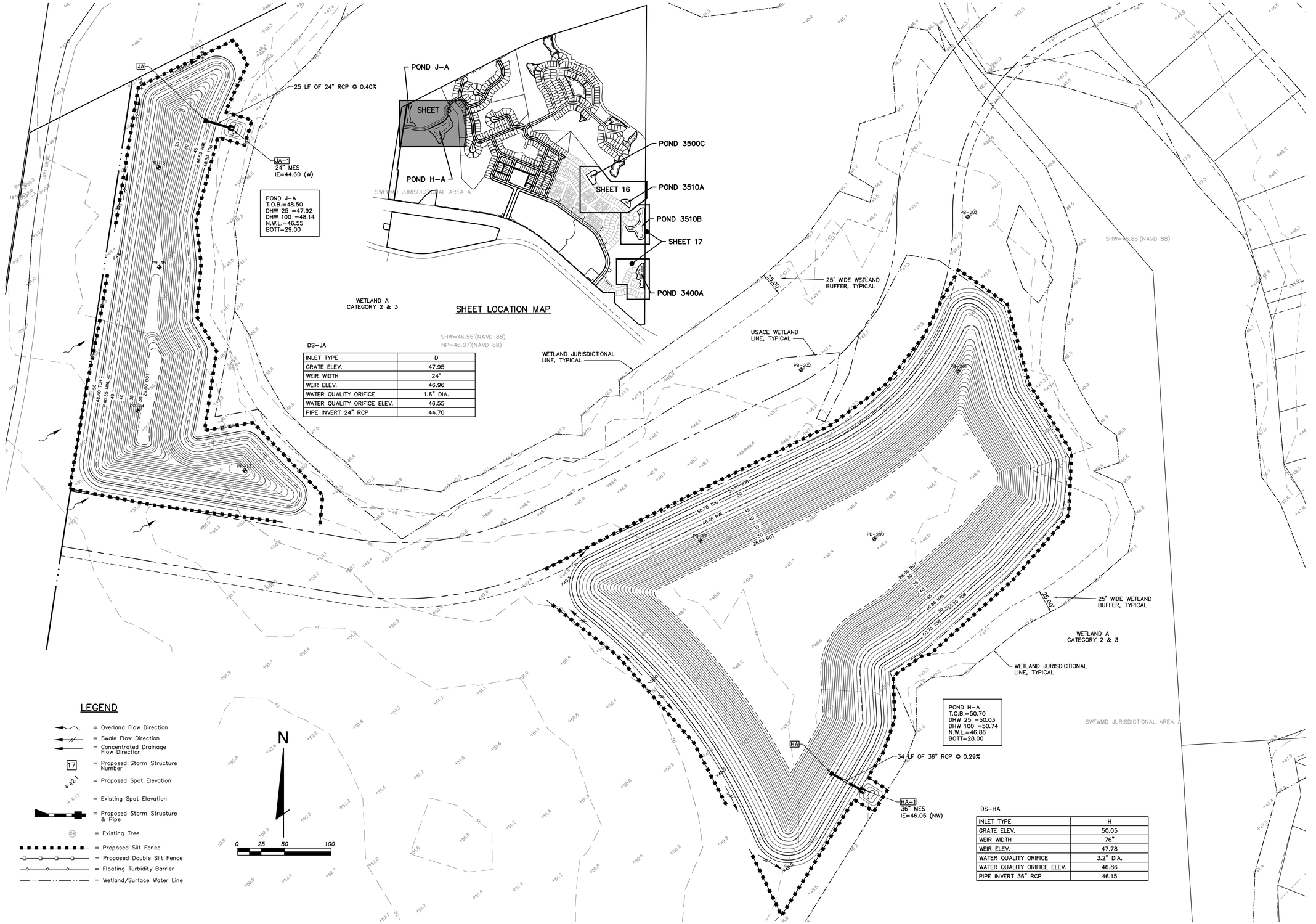

DS-JA

INLET TYPE	D
GRATE ELEV.	47.95
WEIR WIDTH	24"
WEIR ELEV.	46.96
WATER QUALITY ORIFICE	1.6" DIA.
WATER QUALITY ORIFICE ELEV.	46.55
PIPE INVERT 24" RCP	44.70

DS-HA

INLET TYPE	H
GRATE ELEV.	50.05
WEIR WIDTH	76"
WEIR ELEV.	47.78
WATER QUALITY ORIFICE	3.2" DIA.
WATER QUALITY ORIFICE ELEV.	46.86
PIPE INVERT 36" RCP	46.15

PAUL E. SKIDMORE
LICENSE
NO. 39631
STATE OF FLORIDA
PROFESSIONAL ENGINEER

JOB NO.	506-100F
EPN	213
DATE	10-1-2015
DESIGNED	RAH
DRAWN	RAH
CHECKED	PES
Q.C.	
APP'D BY	

NO.	DATE	REVISIONS

DESIGNED FOR
ASTURIA COMMUNITY DEVELOPMENT DISTRICT
605 PALENCIA CLUB DRIVE, ST. AUGUSTINE, FLORIDA 32095
PHONE: (904) 810-0500 - FAX: (904) 810-0525 - E-MAIL: sean.manson@hines.com

PROJECT NAME: Asturia

PHASE 2

SHEET NAME: **PAVING, GRADING, AND DRAINAGE PLANS (7)**

ENGINEER / SURVEYOR
FLORIDA DESIGN CONSULTANTS, INC.
THINK IT. ACHIEVE IT.
3030 STARKEY BOULEVARD, NEW PORT RICHEY, FLORIDA 34655
PHONE: (800) 532 - 1047 FAX: (727) 848 - 3648 WWW.FLDESIGN.COM C.A. NO. 7421
E-MAIL: pskidmore@fldesign.com

PLAN SET DATE
October 7, 2015

SHEET 15 OF 52

©Copyright 2015 Florida Design Consultants, Inc. Drawings and concepts may not be used or reproduced without written permission.

K:\213\Proj\Data\ConstDocs\Plans\Phase 2\213_ASTURIA-PH2-PPONDS-1.dwg - Oct 20, 2015 @ 1:28pm - rhall

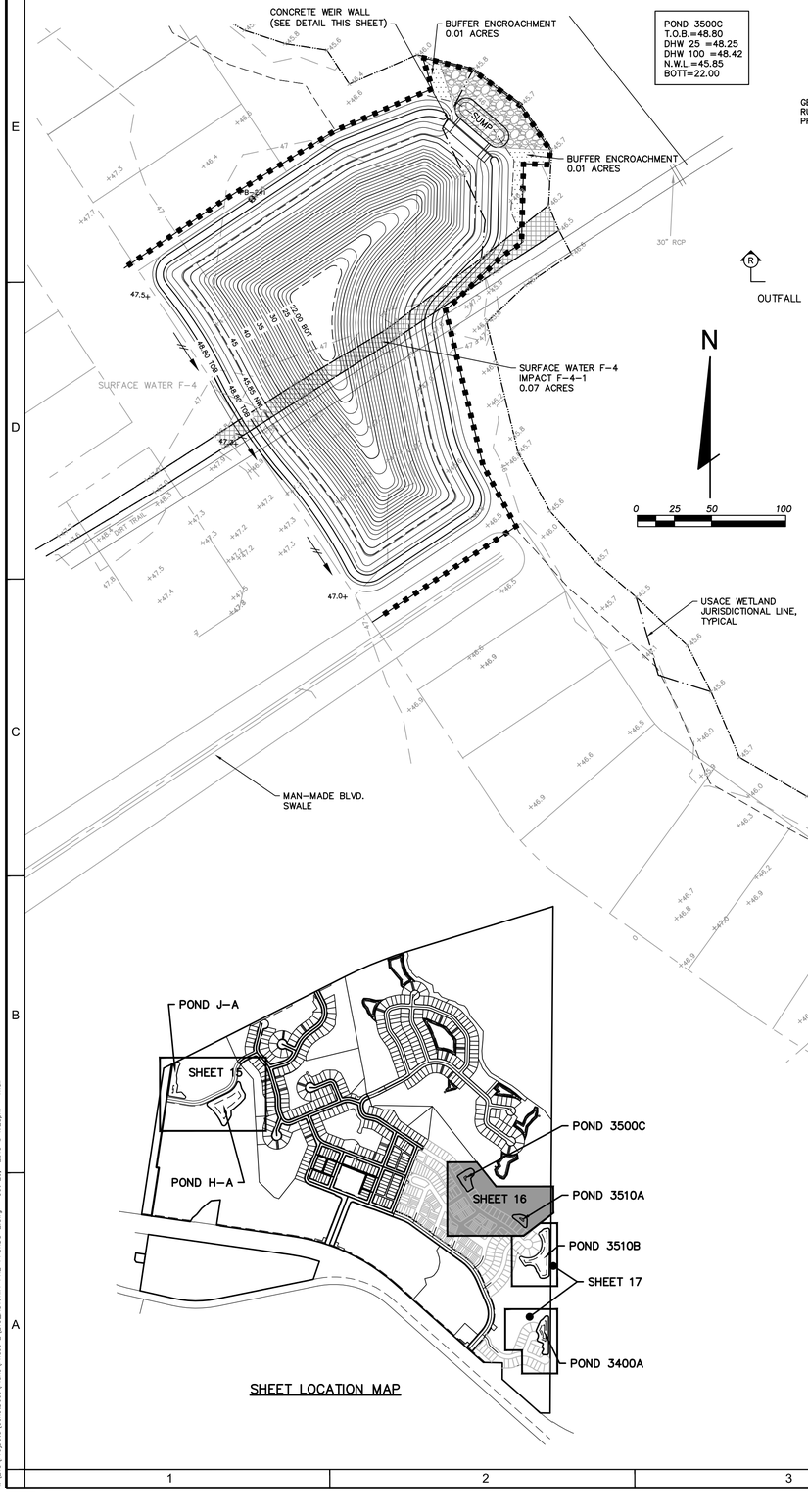

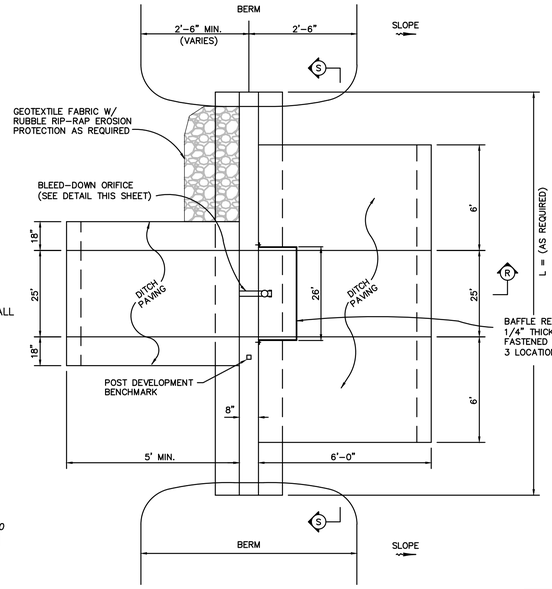

TYPE "CS-1" WALL

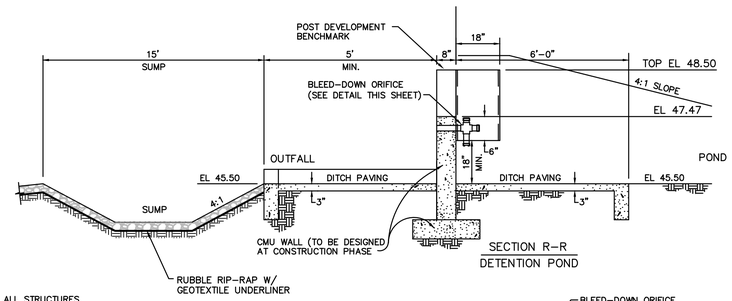

SECTION R-R
DETENTION POND

* NOTE: CONTRACTOR TO SUBMIT WALL STRUCTURAL DRAWINGS SIGNED & SEALED BY A REGISTERED STRUCTURAL ENGINEER DURING SHOP DRAWING REVIEW, PRIOR TO CONSTRUCTION.

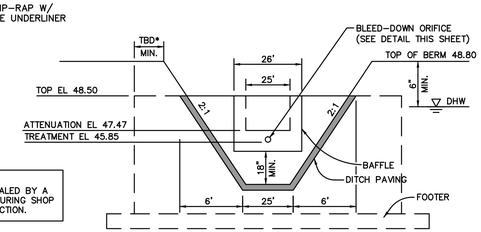

SECTION S-S
N.T.S.

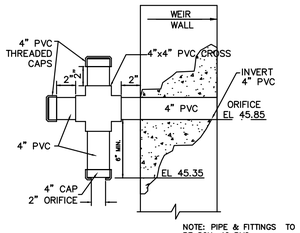

NOTE: PIPE & FITTINGS TO BE SCH. 40 PVC

BLEED-DOWN ORIFICE DETAIL
N.T.S.

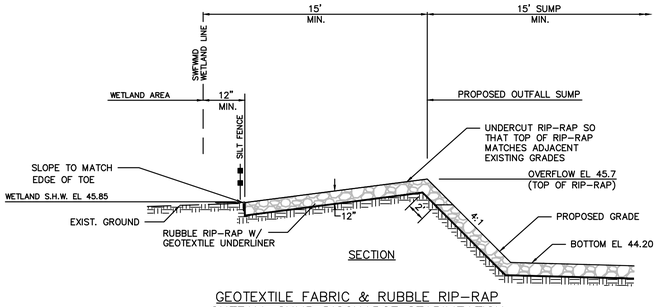

SECTION

GEOTEXTILE FABRIC & RUBBLE RIP-RAP OUTFALL SUMP DISCHARGE STABILIZATION
N.T.S.

CONCRETE WEIR WALL DETAIL FOR POND 3500C
N.T.S.

SHEET LOCATION MAP

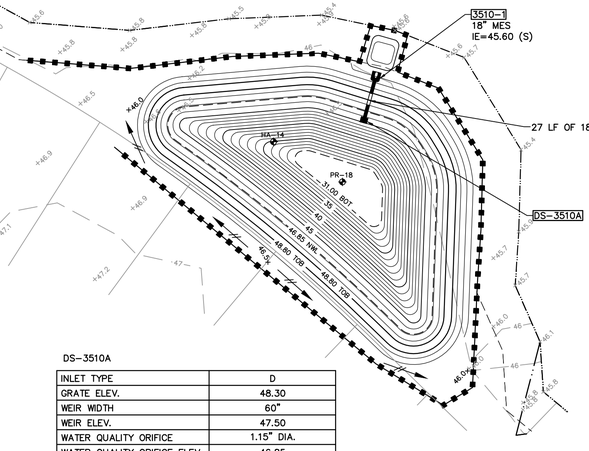

POND 3510A
T.O.B.=48.80
DHW 25 =48.26
DHW 100 =48.54
N.W.L.=46.85
BOTT=31.00

DS-3510A

INLET TYPE	D
GRATE ELEV.	48.30
WEIR WIDTH	60"
WEIR ELEV.	47.50
WATER QUALITY ORIFICE	1.15" DIA.
WATER QUALITY ORIFICE ELEV.	46.85
PIPE INVERT 18" RCP	45.80

LEGEND

- = Overland Flow Direction
- = Swale Flow Direction
- = Concentrated Drainage Flow Direction
- 17 = Proposed Storm Structure Number
- +42.1 = Proposed Spot Elevation
- + 6.17 = Existing Spot Elevation
- = Proposed Storm Structure & Pipe
- = Existing Tree
- = Proposed Silt Fence
- = Proposed Double Silt Fence
- = Floating Turbidity Barrier
- = Wetland/Surface Water Line
- = Buffer Encroachment
- = Limits of Surface Water Impact

PAUL E. SKIDMORE LICENSE NO. 39631 STATE OF FLORIDA PROFESSIONAL ENGINEER

JOB NO.	EPN	DATE	DESIGNED	DRAWN	CHKD.
506-100F	213	10-1-2015	RAH	RAH	PES

NO.	REVISIONS	BY	DATE

DESIGNED FOR
ASTURIA COMMUNITY DEVELOPMENT DISTRICT
2005 PALENCIA CLUB DRIVE, ST. AUGUSTINE, FLORIDA 32095
PHONE: (904) 810-0500 - FAX: (904) 810-0525 - E-MAIL: susan.mason@fishnet.com

PROJECT NAME: Asturia

SHEET NAME: **PAVING, GRADING, AND DRAINAGE PLANS (8)**

PHASE 2

ENGINEER / SURVEYOR
FLORIDA DESIGN CONSULTANTS, INC.
THINK IT. ACHIEVE IT.
3030 STARKEY BOULEVARD, NEW PORT RICHEY, FLORIDA 34655
PHONE: (800) 532 - 1047 FAX: (727) 848 - 3648 WWW.FLDESIGN.COM C.A. NO. 7421
E-MAIL: peskimore@fldesign.com

PLAN SET DATE
October 7, 2015

SHEET
16 OF 52

©Copyright 2015 Florida Design Consultants, Inc. Drawings and concepts may not be used or reproduced without written permission.

K:\231\ProData\ConstDocs\Plans\Phase 2\231_AS1B6A-PH2-PP0605-2.dwg - Oct 20, 2015 @ 1:28pm - rhall

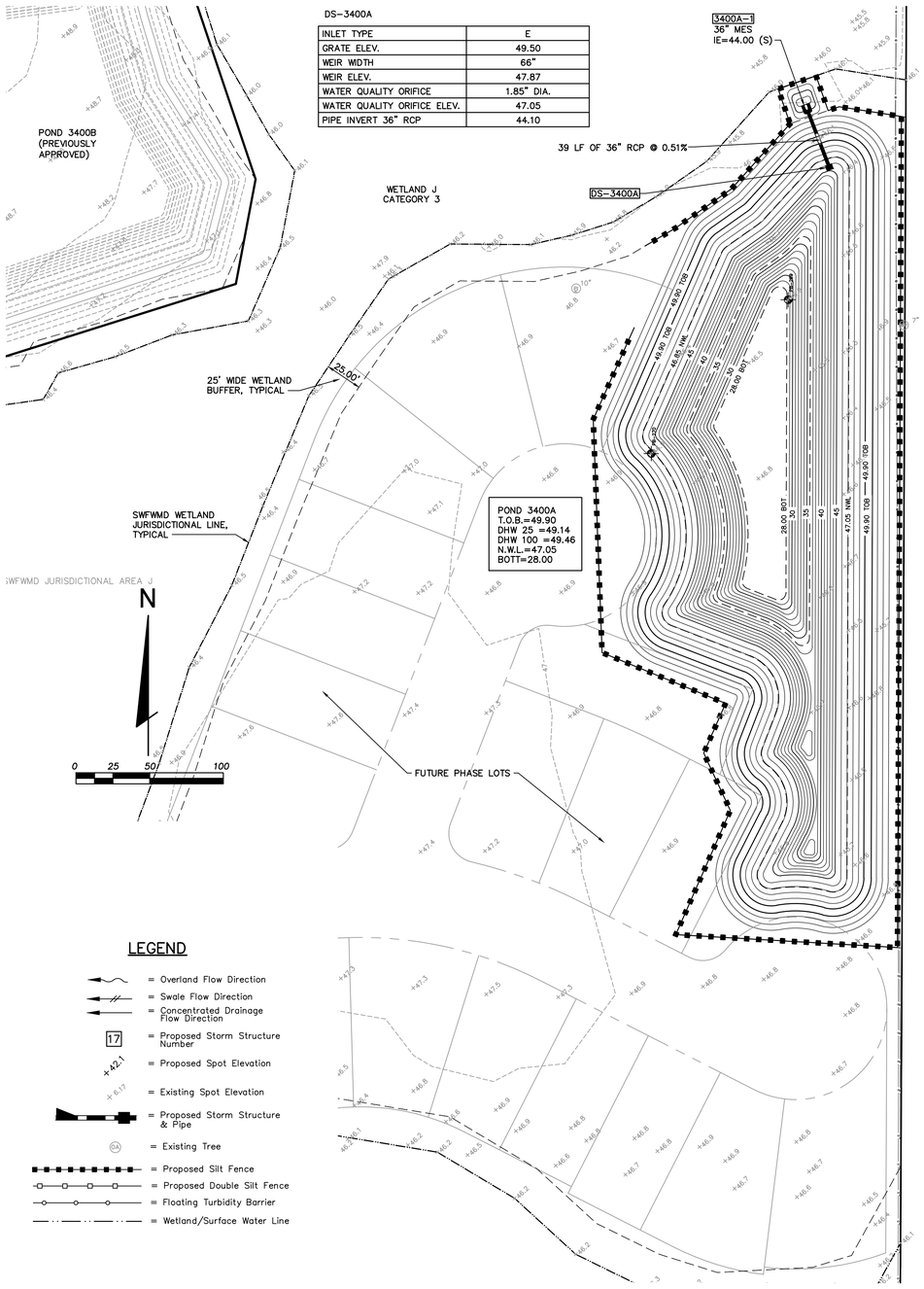

DS-3400A

INLET TYPE	E
GRATE ELEV.	49.50
WEIR WIDTH	66"
WEIR ELEV.	47.87
WATER QUALITY ORIFICE	1.85" DIA.
WATER QUALITY ORIFICE ELEV.	47.05
PIPE INVERT 36" RCP	44.10

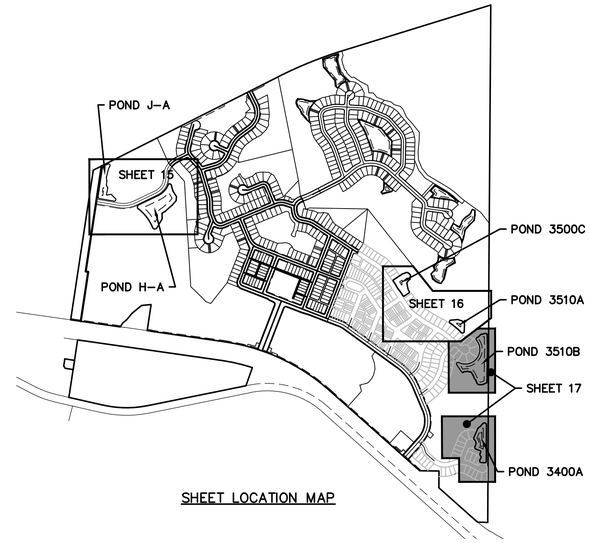

SHEET LOCATION MAP

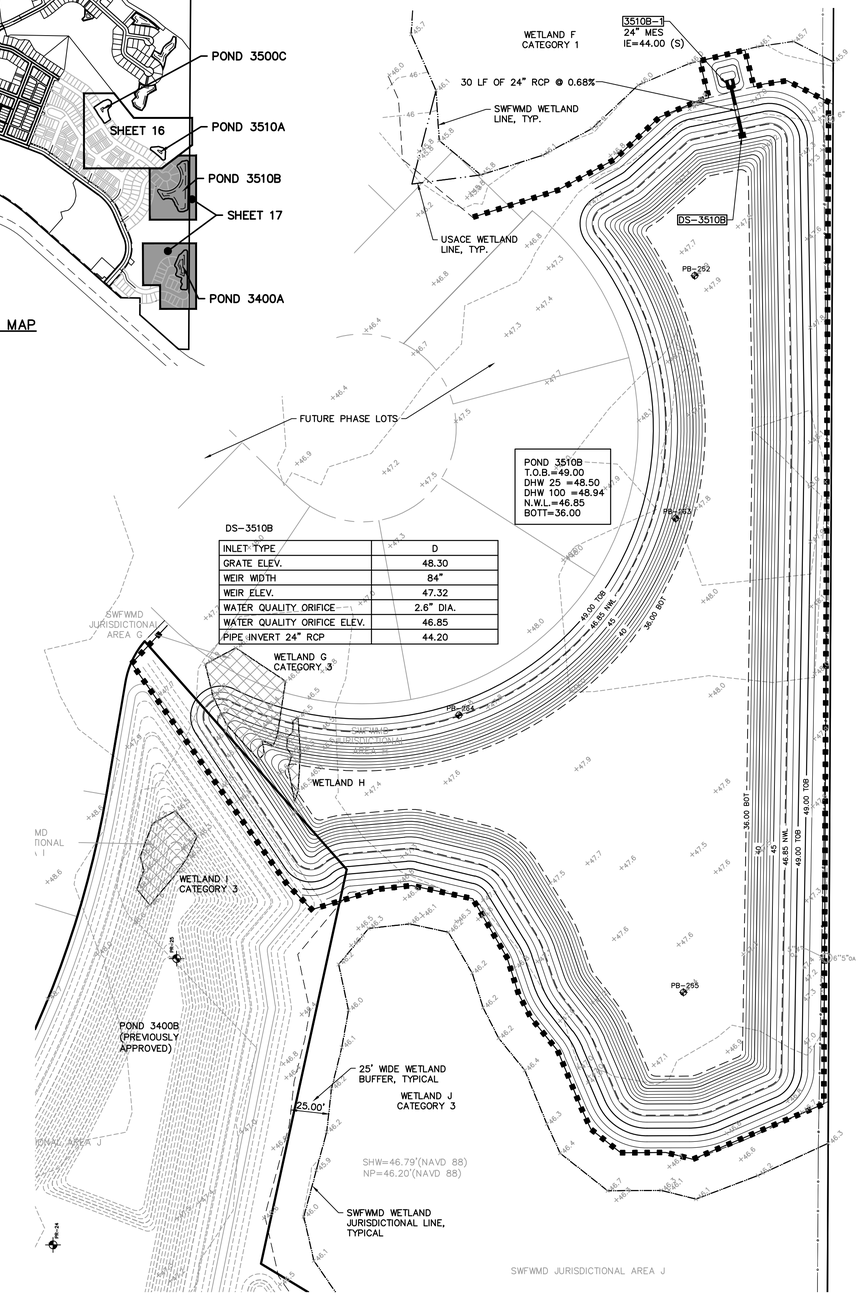

DS-3510B

INLET TYPE	D
GRATE ELEV.	48.30
WEIR WIDTH	84"
WEIR ELEV.	47.32
WATER QUALITY ORIFICE	2.6" DIA.
WATER QUALITY ORIFICE ELEV.	46.85
PIPE INVERT 24" RCP	44.20

LEGEND

- = Overland Flow Direction
- = Swale Flow Direction
- = Concentrated Drainage Flow Direction
- 17 = Proposed Storm Structure Number
- +42.1 = Proposed Spot Elevation
- +6.17 = Existing Spot Elevation
- = Proposed Storm Structure & Pipe
- = Existing Tree
- = Proposed Silt Fence
- = Proposed Double Silt Fence
- = Floating Turbidity Barrier
- = Wetland/Surface Water Line

PAUL E. SKIDMORE
LICENSE
NO. 39631
STATE OF FLORIDA
PROFESSIONAL ENGINEER

JOB NO.	506-100F
EPN	213
DATE	10-1-2015
DESIGNED	RAH
DRAWN	RAH
CHECKED	PES
Q.C.	
APP'D BY	

NO.	DATE	REVISIONS

DESIGNED FOR
ASTURIA COMMUNITY DEVELOPMENT DISTRICT
605 PALENCIA CLUB DRIVE, ST. AUGUSTINE, FLORIDA 32095
PHONE: (904) 810-0500 - FAX: (904) 810-0525 - E-MAIL: sean.manson@hines.com

PROJECT NAME: Asturia

PHASE 2

SHEET NAME: **PAVING, GRADING, AND DRAINAGE PLANS (9)**

ENGINEER / SURVEYOR
FLORIDA DESIGN CONSULTANTS, INC.
— THINK IT. ACHIEVE IT. —
3030 STARKEY BOULEVARD, NEW PORT RICHEY, FLORIDA 34655
PHONE: (800) 532 - 1047 FAX: (727) 848 - 3648 WWW.FLDESIGN.COM C.A. NO. 7421
E-MAIL: pskidmore@fldesign.com

PLAN SET DATE
October 7, 2015

SHEET 17 OF 52

©Copyright 2015 Florida Design Consultants, Inc. Drawings and concepts may not be used or reproduced without written permission.

K:\213\ProjData\ConstDocs\Plans\Phase 2\213_ASTURIA-PH2-PPONDS-3.dwg - Oct 20, 2015 @ 1:29pm - rhall

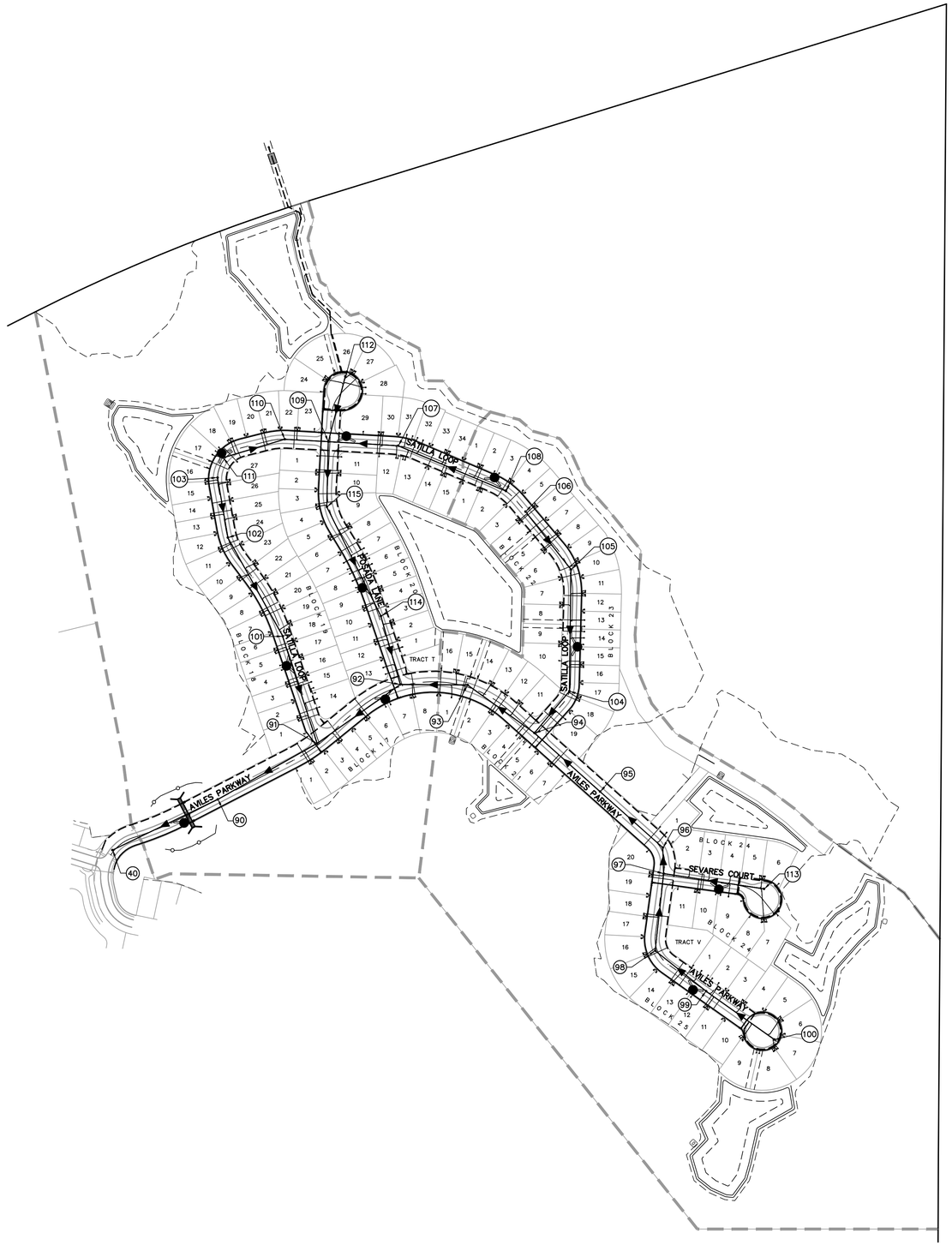

N

0 100 200 400

LEGEND

- = Proposed Water Line, Valve, & Services
- = Existing Water Line & Valve
- = Existing Force Main
- = Proposed Reclaimed Water Line
- FM = Proposed Force Main
- = Proposed Sanitary Sewer & Services
- (50) = Proposed Sanitary Sewer Manhole Number
- = Proposed Fire Hydrant (See Paving, Grading, And Drainage Plans For Finished Grade Elevation)
- = Existing Fire Hydrant
- = Proposed Blowoff
- = Phase Line

PAUL E. SKIDMORE LICENSE NO. 39631 STATE OF FLORIDA PROFESSIONAL ENGINEER

JOB NO.	EPN	DATE	DESIGNED	DRAWN	CHECKED
506-100F	213	10-1-2015	RAH	RAH	PES

NO.	DATE	REVISIONS

DESIGNED FOR
ASTURIA COMMUNITY DEVELOPMENT DISTRICT
2005 PALENCIA CLUB DRIVE, ST. AUGUSTINE, FLORIDA 32095
PHONE: (904) 810-0500 - FAX: (904) 810-0525 - E-MAIL: sean.mariano@dhmes.com

PROJECT NAME
Asturia

SHEET NAME
OVERALL UTILITY PLAN

ENGINEER / SURVEYOR
FLORIDA DESIGN CONSULTANTS, INC.
— THINK IT. ACHIEVE IT. —
3030 STARKEY BOULEVARD, NEW PORT RICHEY, FLORIDA 34655
PHONE: (800) 532 - 1047 FAX: (727) 848 - 3648 WWW.FLDESIGN.COM C.A. NO. 7421
E-MAIL: pskidmore@fldesign.com

PLAN SET DATE
October 7, 2015

SHEET 18 OF 52

©Copyright 2015 Florida Design Consultants, Inc. Drawings and concepts may not be used or reproduced without written permission.

K:\213\Proj Data\ConstDocs\Plans\Phase 2\213_ASTURIA--PH2--ROADTPL.dwg -- Oct. 20, 2015 @ 1:29pm -- rhall

N

0 25 50 100

LEGEND

- = Proposed Water Line, Valve, & Services
- WM = Existing Water Line & Valve
- = Proposed Storm Sewer
- = Proposed Reclaimed Water
- = Proposed Sanitary Sewer & Services
- (50) = Proposed Sanitary Sewer Manhole Number
- = Proposed Fire Hydrant Assembly (See Paving, Grading, And Drainage Plans For Finished Grade Elevation)
- = Existing Fire Hydrant
- = Proposed Blowoff Assembly

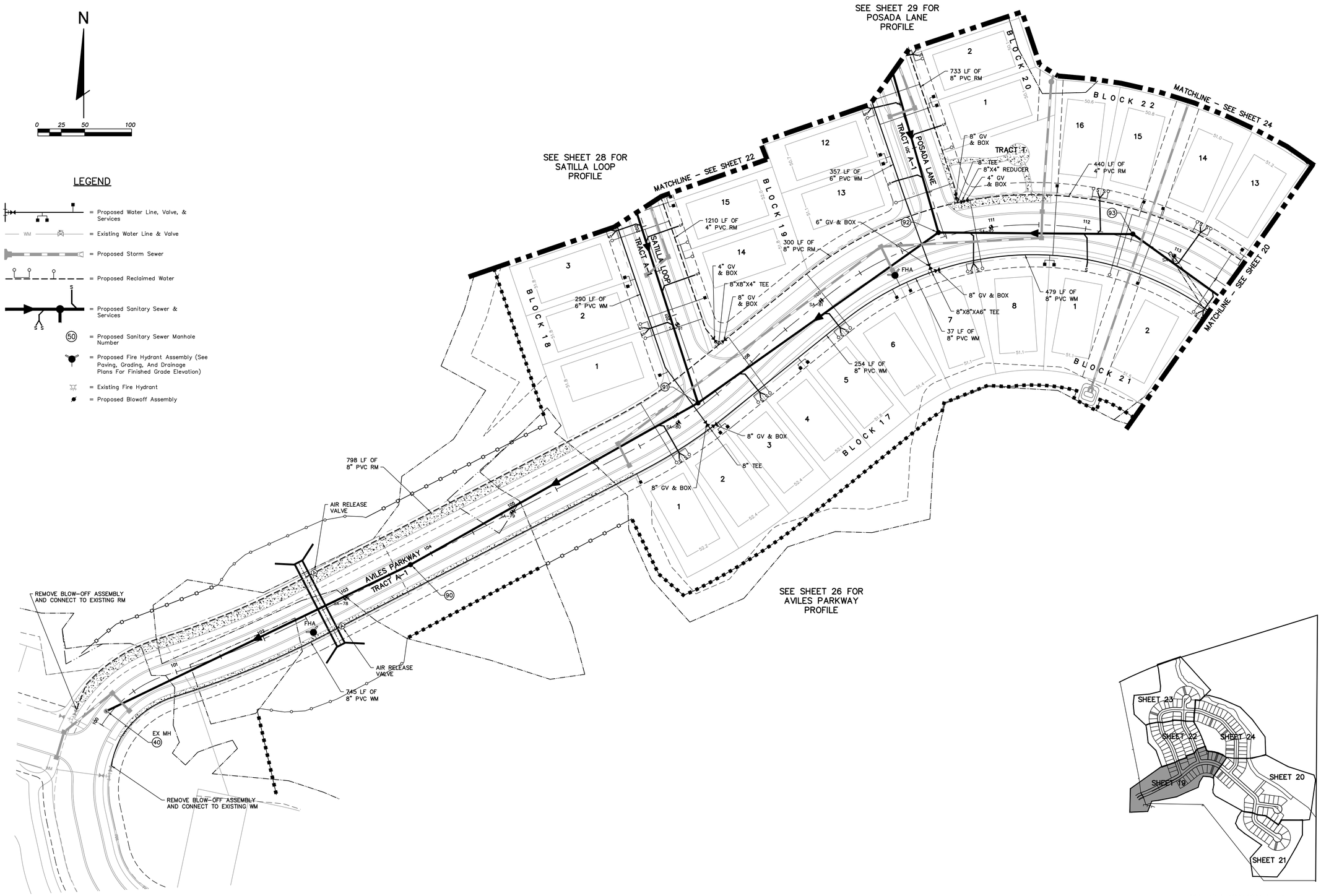

SHEET LOCATION MAP

PAUL E. SKIDMORE LICENSE NO. 39631 STATE OF FLORIDA PROFESSIONAL ENGINEER

JOB NO.	EPN	DATE	DESIGNED	DRAWN	CHKD.	APPVD.
506-100F	213	10-1-2015	RAH	RAH		PES

NO.	DATE	REVISIONS

DESIGNED FOR
ASTURIA COMMUNITY DEVELOPMENT DISTRICT
9501 PALENCIA CLUB DRIVE, ST. AUGUSTINE, FLORIDA 32092
PHONE: (904) 810-0500 - FAX: (904) 810-0525 - E-MAIL: sean.mcmanus@pmnet.com

PROJECT NAME: Asturia | PHASE 2

SHEET NAME: UTILITY PLANS (1)

ENGINEER / SURVEYOR
FLORIDA DESIGN CONSULTANTS, INC.
THINK IT. ACHIEVE IT.
3030 STARKEY BOULEVARD, NEW PORT RICHEY, FLORIDA 34655
PHONE: (800) 532 - 1047 FAX: (727) 848 - 3648 WWW.FLDESIGN.COM C.A. NO. 7421
E-MAIL pskidmore@fldesign.com

PLAN SET DATE: October 7, 2015

SHEET 19 OF 52

©Copyright 2015 Florida Design Consultants, Inc. Drawings and concepts may not be used or reproduced without written permission.

K:\213\Proj\Dsh\Const\Dwg\Plans\Phase 2\213_ASTURIA-PH2-PLTU-1.dwg – Oct 20, 2015 @ 1:30pm – rhall

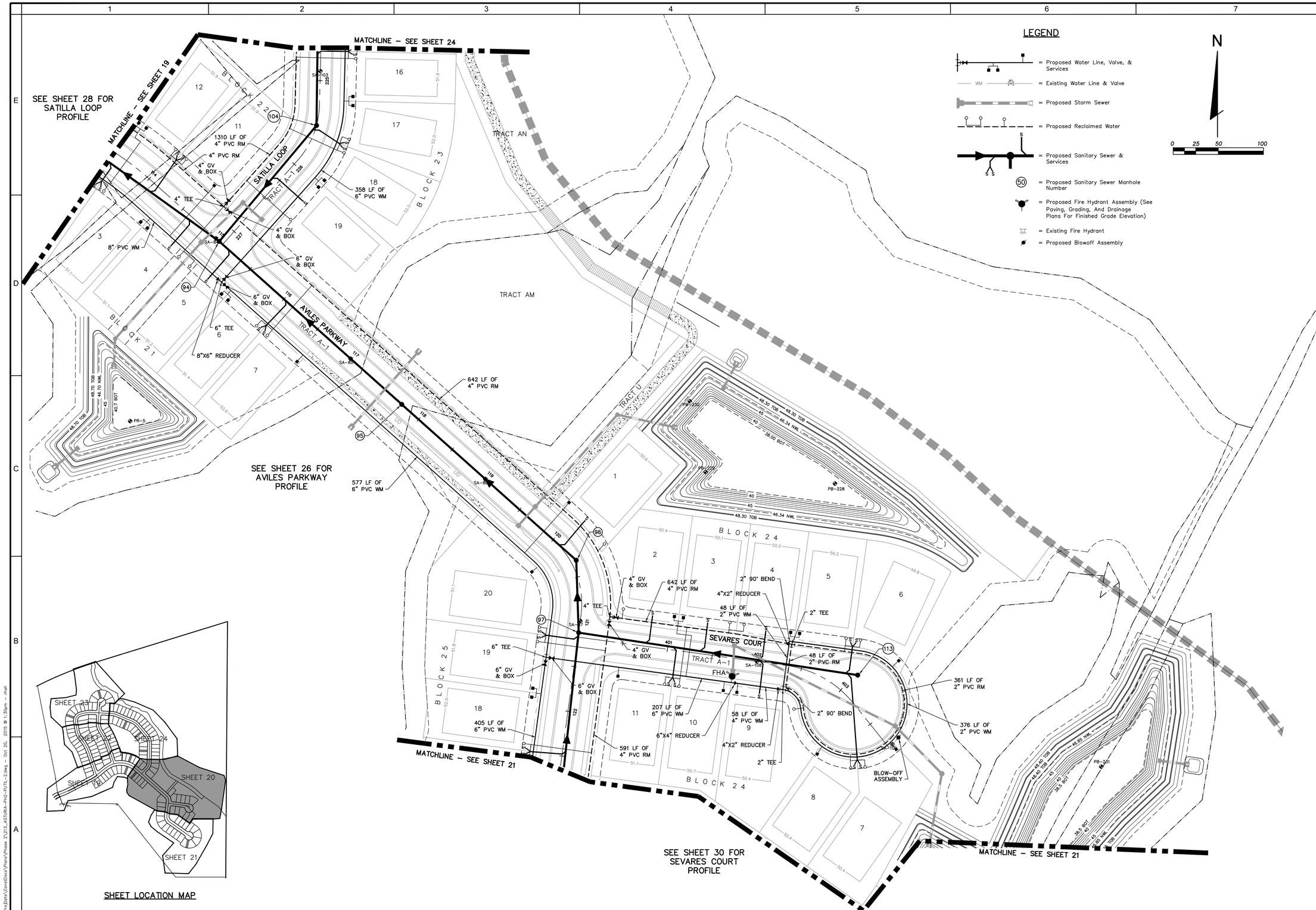

PAUL E. SKIDMORE LICENSE NO. 39631 STATE OF FLORIDA PROFESSIONAL ENGINEER

JOB NO.	EFN	DATE	DESIGNED	DRAWN	CHECKED	Q.C.	APP'D BY
506-100F	213	10-1-2015	RAH	RAH	PES		

NO.	DATE	REVISIONS

DESIGNED FOR
ASTURIA COMMUNITY DEVELOPMENT DISTRICT
605 PALENCIA CLUB DRIVE, ST. AUGUSTINE, FLORIDA 32095
PHONE: (904) 810-0500 - FAX: (904) 810-0525 - E-MAIL: sean.manson@hines.com

PROJECT NAME: Asturia

PHASE 2

SHEET NAME: UTILITY PLANS (2)

ENGINEER / SURVEYOR
FLORIDA DESIGN CONSULTANTS, INC.
— THINK IT. ACHIEVE IT. —
3030 STARKEY BOULEVARD, NEW PORT RICHEY, FLORIDA 34655
PHONE: (800) 532 - 1047 FAX: (727) 848 - 3648 WWW.FLDESIGN.COM C.A. NO. 7421
E-MAIL: pskidmore@fldesign.com

PLAN SET DATE
October 7, 2015

SHEET 20 OF 52

©Copyright 2015 Florida Design Consultants, Inc. Drawings and concepts may not be used or reproduced without written permission.

K:\213\ProjData\ConstDocs\Plans\Phase 2\213_ASTURIA-PH2-PUTIL-2.dwg – Oct 20, 2015 @ 1:30pm – rhall

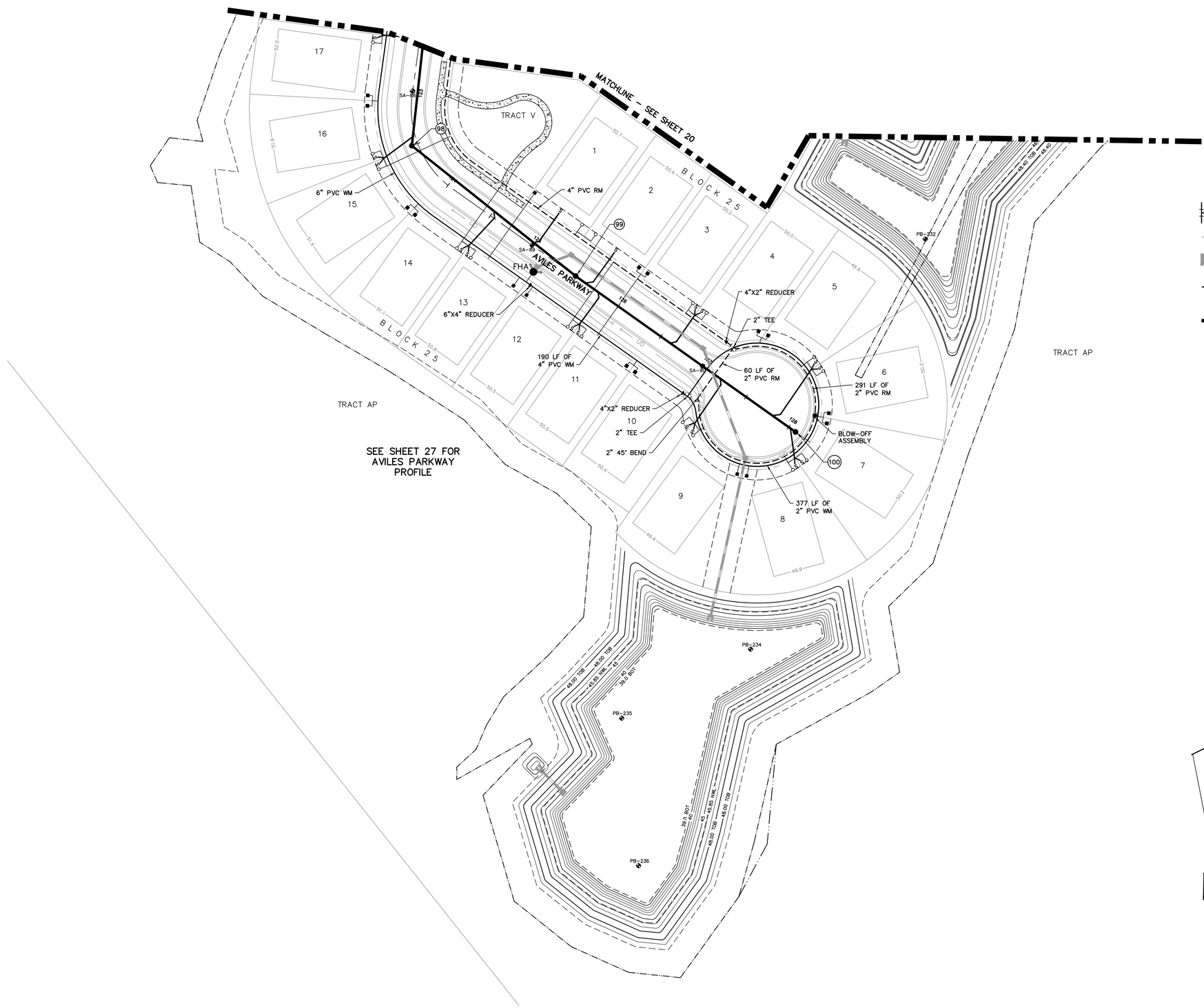

N

0 25 50 100

LEGEND

- = Proposed Water Line, Valve, & Services
- = Existing Water Line & Valve
- = Proposed Storm Sewer
- = Proposed Reclaimed Water
- = Proposed Sanitary Sewer & Services
- = Proposed Sanitary Sewer Manhole Number
- = Proposed Fire Hydrant Assembly (See Paving, Grading, And Drainage Plans For Finished Grade Elevation)
- = Existing Fire Hydrant
- = Proposed Blowoff Assembly

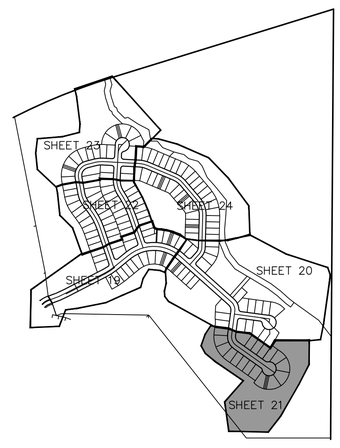

SHEET LOCATION MAP

PAUL E. SKIDMORE
LICENSE
NO. 39631
STATE OF FLORIDA
PROFESSIONAL ENGINEER

JOB NO.	EFN	DATE	DESIGNED	DRAWN	CHECKED	Q.C.	APP'D BY
506-100F	213	10-1-2015	RAH	RAH	PES		

NO.	DATE	REVISIONS

DESIGNED FOR
ASTURIA COMMUNITY DEVELOPMENT DISTRICT
605 PALENCIA CLUB DRIVE, ST. AUGUSTINE, FLORIDA 32095
PHONE: (904) 810-0500 - FAX: (904) 810-0525 - E-MAIL: sean.manson@hines.com

PROJECT NAME: Asturia — PHASE 2

SHEET NAME: UTILITY PLANS (3)

ENGINEER / SURVEYOR
FLORIDA DESIGN CONSULTANTS, INC.
— THINK IT. ACHIEVE IT. —
3030 STARKEY BOULEVARD, NEW PORT RICHEY, FLORIDA 34655
PHONE: (800) 532 - 1047 FAX: (727) 848 - 3648 WWW.FLDESIGN.COM C.A. NO. 7421
E-MAIL: pskidmore@fldesign.com

PLAN SET DATE
October 7, 2015

SHEET 21 OF 52

©Copyright 2015 Florida Design Consultants, Inc. Drawings and concepts may not be used or reproduced without written permission.

K:\213\Proj\Data\ConstDocs\Plans\Phase 2\213_ASTURIA-PH2-PUTIL-3.dwg – Oct 20, 2015 @ 1:31pm – rhall

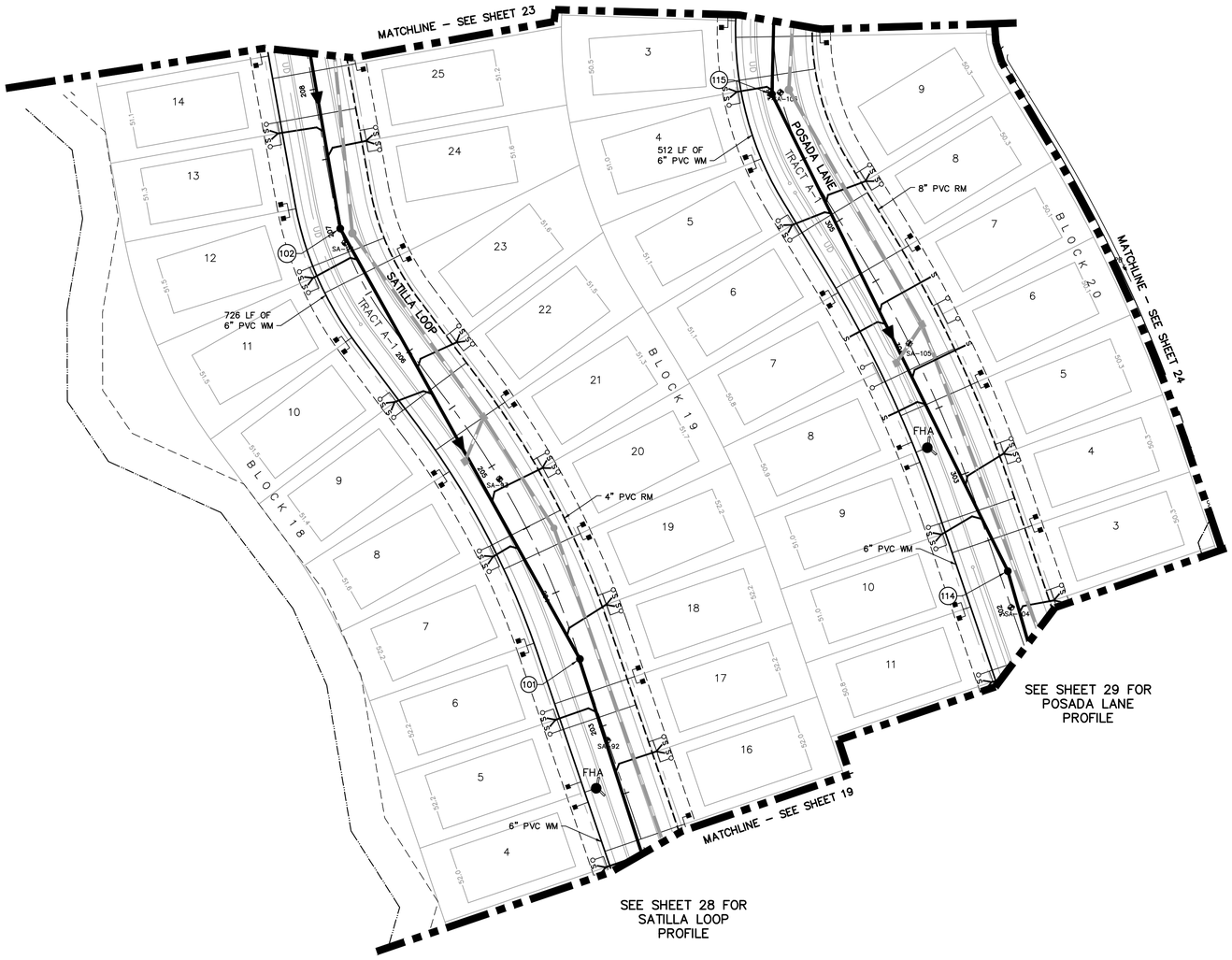

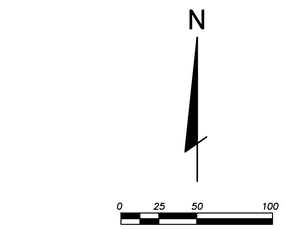

LEGEND

- = Proposed Water Line, Valve, & Services
- WM = Existing Water Line & Valve
- = Proposed Storm Sewer
- = Proposed Reclaimed Water
- = Proposed Sanitary Sewer & Services
- (50) = Proposed Sanitary Sewer Manhole Number
- = Proposed Fire Hydrant Assembly (See Paving, Grading, And Drainage Plans For Finished Grade Elevation)
- = Existing Fire Hydrant
- = Proposed Blowoff Assembly

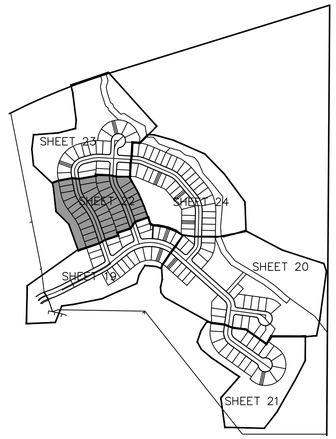

SHEET LOCATION MAP

PAUL E. SKIDMORE LICENSE NO. 39631 STATE OF FLORIDA PROFESSIONAL ENGINEER

JOB NO.	506-100F
EPN	213
DATE	10-1-2015
DESIGNED	RAH
DRAWN	RAH
CHECKED	PES
QUALITY	

REVISIONS | NO. | DATE |

DESIGNED FOR
ASTURIA COMMUNITY DEVELOPMENT DISTRICT
600 PALENCIA CLUB DRIVE ST. AUGUSTINE, FLORIDA 32095
PHONE: (904) 810-0500 - FAX: (904) 810-0525 - E-MAIL: sean.mariano@thrrea.com

PROJECT NAME: Asturia — PHASE 2

SHEET NAME: UTILITY PLANS (4)

ENGINEER / SURVEYOR
FLORIDA DESIGN CONSULTANTS, INC.
THINK IT. ACHIEVE IT.
3030 STARKEY BOULEVARD, NEW PORT RICHEY, FLORIDA 34655
PHONE: (800) 532 - 1047 FAX: (727) 848 - 3648 WWW.FLDESIGN.COM C.A. NO. 7421
E-MAIL: paskmore@fldesign.com

PLAN SET DATE: October 7, 2015

SHEET 22 OF 52

© Copyright 2015 Florida Design Consultants, Inc. Drawings and concepts may not be used or reproduced without written permission.

K:\213\Eng\Data\CivilDocs\Plan\Phase 2\213_ASTURIA-PH2-RITL-4.dwg – Oct 20, 2015 @ 1:31pm – rhall

SEE SHEET 25 FOR CONTINUATION

8" PVC RM

8" 22.5° BEND

182 LF OF 8" PVC RM

8" 22.5° BEND

75 LF OF 8" PVC RM

8" 45° BEND

193 LF OF 8" PVC RM

8" PVC RM

8"X4" REDUCER

BLOW-OFF ASSEMBLY

8" TEE

399 LF OF 2" PVC WM

138 LF OF 4" PVC RM

4" 90° BEND

51 LF OF 4" PVC RM

190 LF OF 8" PVC RM

8"X4" REDUCER

2" TEE

4"X2" REDUCER

70 LF OF 4" PVC WM

4" GV & BOX

329 LF OF 6" PVC WM

6"X4" REDUCER

6" CROSS

8" TEE

127 LF OF 8" PVC RM

483 LF OF 6" PVC WM

77 LF OF 6" PVC WM

6" GV & BOX

FHA

SATILLA LOOP

TRACT T-1

6" GV & BOX

4" PVC RM

4" GV & BOX

4" PVC RM

8"X4" CROSS

6" GV & BOX

6" PVC WM

8" PVC RM

6" PVC WM

4" PVC RM

BLOCK 18

BLOCK 19

BLOCK 20

POSADA LANE

PB-219

PB-220

PB-222

PB-223

PB-221

PB-207

MATCHLINE – SEE SHEET 22

MATCHLINE – SEE SHEET 24

SEE SHEET 28 FOR SATILLA LOOP PROFILE

SEE SHEET 29 FOR POSADA LANE PROFILE

N

0 25 50 100

LEGEND

= Proposed Water Line, Valve, & Services

= Existing Water Line & Valve

= Proposed Storm Sewer

= Proposed Reclaimed Water

= Proposed Sanitary Sewer & Services

= Proposed Sanitary Sewer Manhole Number

= Proposed Fire Hydrant Assembly (See Paving, Grading, And Drainage Plans For Finished Grade Elevation)

= Existing Fire Hydrant

= Proposed Blowoff Assembly

SHEET LOCATION MAP

SHEET 23 SHEET 24 SHEET 22 SHEET 19 SHEET 20 SHEET 21

PAUL E. SKIDMORE LICENSE NO. 39631 STATE OF FLORIDA PROFESSIONAL ENGINEER

JOB NO.	EPN	DATE	DESIGNED	DRAWN	CHK'D
506-100F	213	10-1-2015	RAH	RAH	PES

DESIGNED FOR
ASTURIA COMMUNITY DEVELOPMENT DISTRICT
600 PALENCIA CLUB DRIVE, ST. AUGUSTINE, FLORIDA 32095
PHONE: (904) 810-0500 - FAX: (904) 810-0525 - E-MAIL: seanmmaw@bhmi.com

PROJECT NAME
Asturia

PHASE 2

SHEET NAME
UTILITY PLANS (5)

FLORIDA DESIGN CONSULTANTS, INC.
THINK IT. ACHIEVE IT.
3030 STARKEY BOULEVARD, NEW PORT RICHEY, FLORIDA 34655
PHONE: (800) 532 - 1047 FAX: (727) 848 - 3648 WWW.FLDESIGN.COM C.A. NO. 7421
E-MAIL: pskidmore@fldesign.com
ENGINEER / SURVEYOR

PLAN SET DATE
October 7, 2015

SHEET 23 OF 52

© Copyright 2015 Florida Design Consultants, Inc. Drawings and concepts may not be used or reproduced without written permission.

K:\21JV\Proj\Data\CivilDocs\Plans\Phase 2\213_ASTURIA-PH2-PUTIL-5.dwg - Oct 20, 2015 @ 1:31pm - rhall

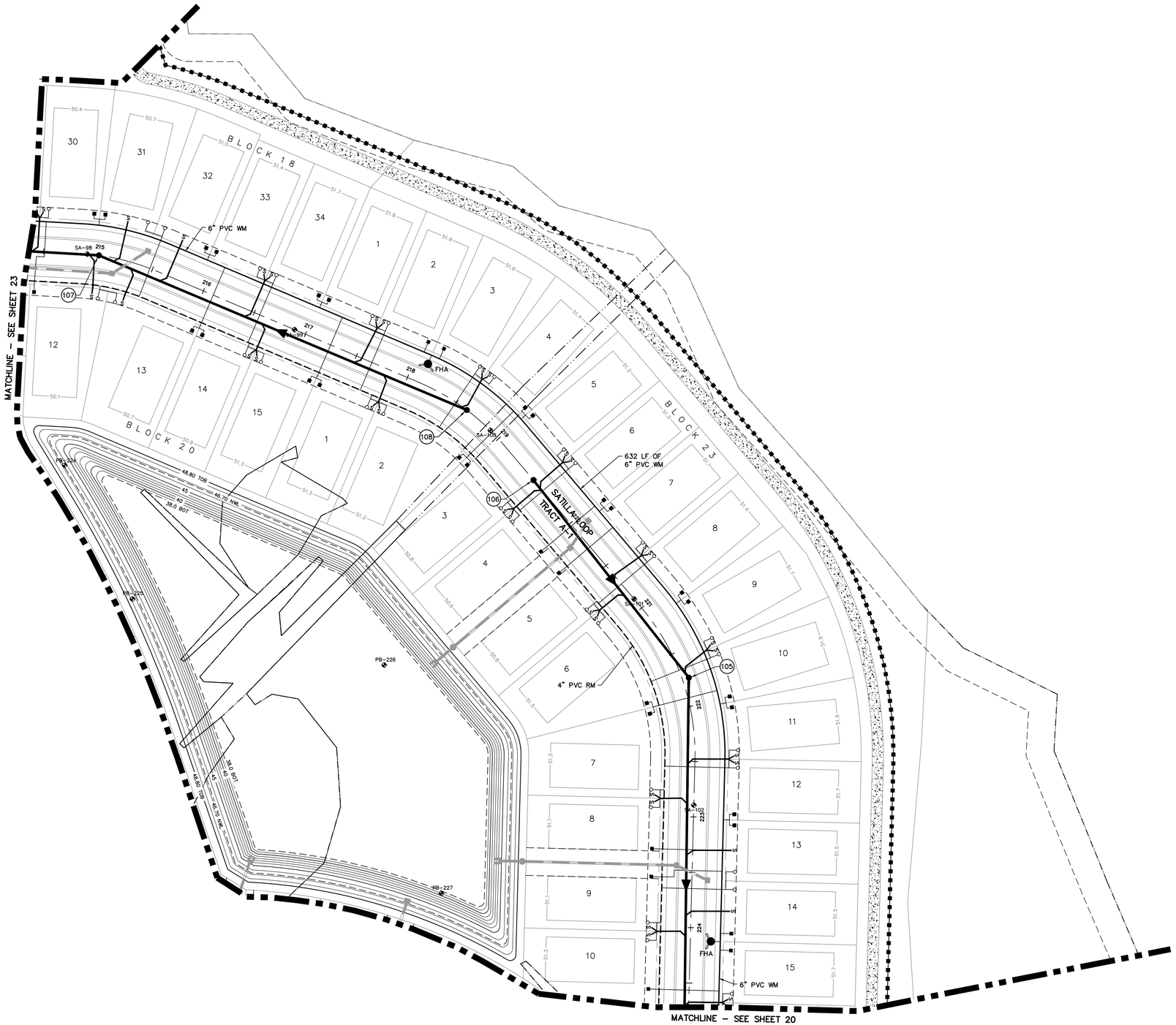

SEE SHEET 28 FOR
SATILLA LOOP
PROFILE

N

0 25 50 100

LEGEND

- = Proposed Water Line, Valve, & Services
- = Existing Water Line & Valve
- = Proposed Storm Sewer
- = Proposed Reclaimed Water
- = Proposed Sanitary Sewer & Services
- = Proposed Sanitary Sewer Manhole Number
- = Proposed Fire Hydrant Assembly (See Paving, Grading, And Drainage Plans For Finished Grade Elevation)
- = Existing Fire Hydrant
- = Proposed Blowoff Assembly

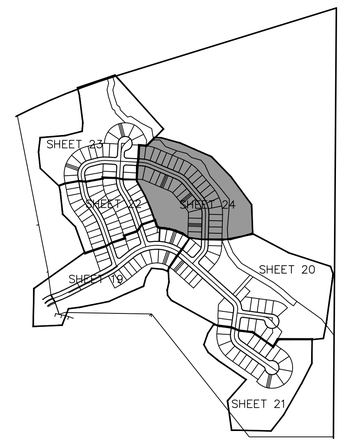

SHEET LOCATION MAP

PAUL E. SKIDMORE
LICENSE
NO. 39631
STATE OF FLORIDA
PROFESSIONAL ENGINEER

JOB NO.	EFN	DATE	DESIGNED	DRAWN	CHECKED	APP'D BY
506-100F	213	10-1-2015	RAH	RAH	PES	

NO.	DATE	REVISIONS

DESIGNED FOR
ASTURIA COMMUNITY DEVELOPMENT DISTRICT
605 PALENCIA CLUB DRIVE, ST. AUGUSTINE, FLORIDA 32095
PHONE: (904) 810-0500 - FAX: (904) 810-0525 - E-MAIL: sean.manson@hines.com

PROJECT NAME: Asturia | PHASE 2

SHEET NAME: UTILITY PLANS (6)

ENGINEER / SURVEYOR
FLORIDA DESIGN CONSULTANTS, INC.
— THINK IT. ACHIEVE IT. —
3030 STARKEY BOULEVARD, NEW PORT RICHEY, FLORIDA 34655
PHONE: (800) 532 - 1047 FAX: (727) 848 - 3648 WWW.FLDESIGN.COM C.A. NO. 7421
E-MAIL: pskidmore@fldesign.com

PLAN SET DATE
October 7, 2015

SHEET 24 OF 52

©Copyright 2015 Florida Design Consultants, Inc. Drawings and concepts may not be used or reproduced without written permission.

K:\213\ProData\ConstDocs\Plans\Phase 2\213_ASTURIA-PH2-PUTIL-6.dwg – Oct 20, 2015 @ 1:32pm – rhall

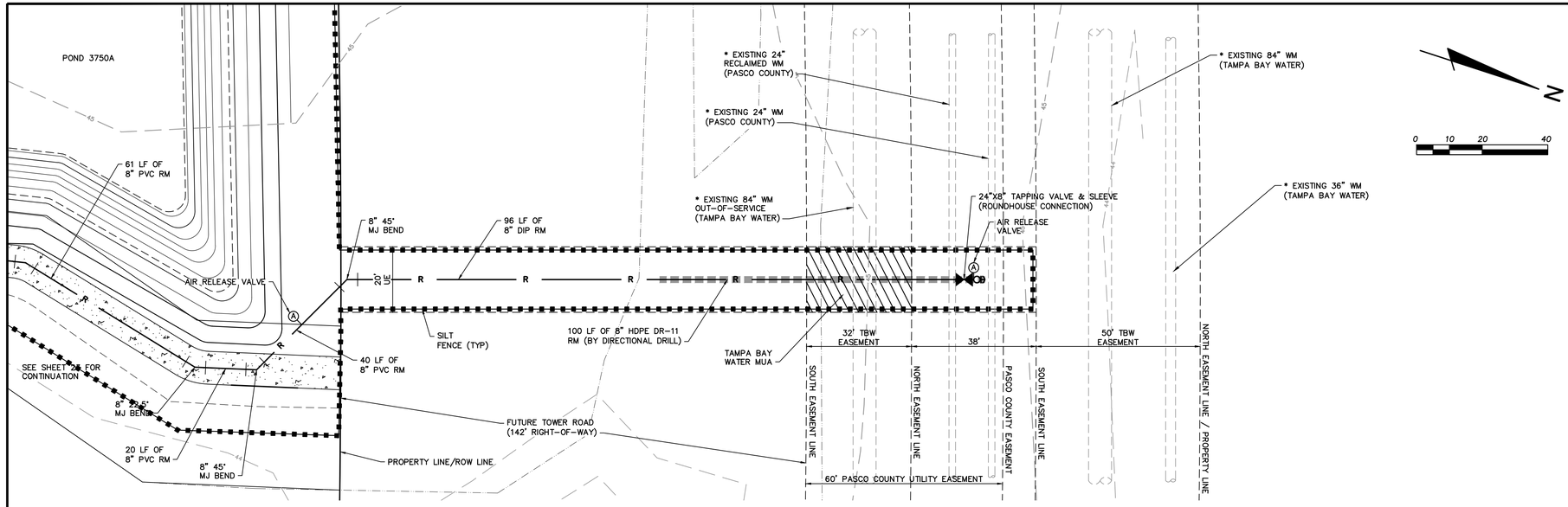

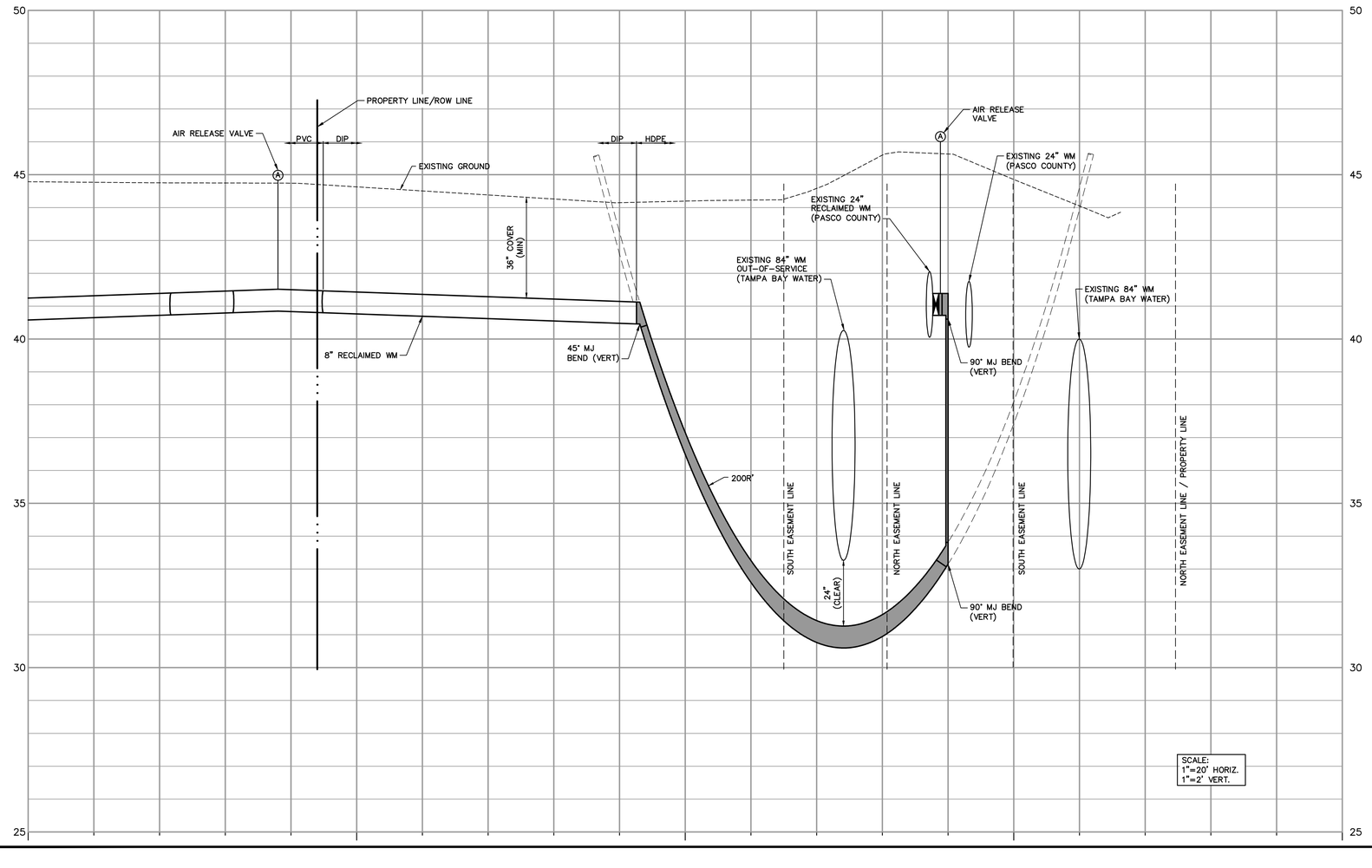

* NOTE:

EXISTING UTILITIES ARE APPROXIMATE, CONTRACTOR TO VERIFY LOCATION PRIOR TO INSTALLATION OF PROPOSED RECLAIM WATERMAIN.

1. CONNECTIONS INTO A COUNTY-OWNED SYSTEM SHALL BE VIA WET TAP. WET TAPS SHALL BE PERFORMED EXCLUSIVELY BY THE UTILITIES SERVICES BRANCH AT THE DEVELOPERS EXPENSE. EXCAVATION, BACKFILL, AND SURFACE RESTORATION SHALL BE THE CONTRACTOR'S RESPONSIBILITY. MATERIAL FOR WET TAPS LARGER THAN TWO INCHES SHALL BE PROVIDED AND INSTALLED BY THE PROJECT CONTRACTOR.

2. THE CONTRACTOR'S RESPONSIBILITIES REGARDING WET TAPS TWO INCHES AND LARGER SHALL BE AS FOLLOWS:

   2" ONLY – THE EXCAVATED TRENCH MUST BE DRY OR THE TRENCH WILL REQUIRE ROCK AND A PUMP TO BE IN PLACE. THE MINIMUM DISTANCE FROM THE FACE OF THE VALVE TO THE WALL OF THE TRENCH SHALL BE SIX FEET.

   3" AND LARGER – THE CONTRACTOR WILL SUPPLY A TAPPING SADDLE BEING EPOXY COATED, A TAPPING VALVE WITH MECHANICAL JOINT AND THE EQUIPMENT TO PROVIDE AND CONDUCT A PRESSURE TEST. COUNTY PERSONNEL WILL WITNESS THE PRESSURE TEST WHICH MUST BE AT 150 PSI FOR A DURATION OF THIRTY MINUTES.

   THE CONTRACTOR IS RESPONSIBLE FOR THE EXCAVATION BEFORE ANY COUNTY PERSONNEL WILL ENTER THE EXCAVATED AREA. IF THE TRENCH IS FOUR FEET IN DEPTH OR DEEPER, IT WILL REQUIRE A TRENCH BOX OR SLOPING AN A LADDER ACCORDING TO OCCUPATIONAL SAFETY AND HEALTH ADMINISTRATION (OSHA) STANDARDS.

   THE TAPPING VALVE WILL REQUIRE A BLOCKING DEVICE MADE OF SUITABLE MATERIAL OR DEVICE. THIS BLOCKING DEVICE OR MATERIAL WILL BE PLACED UNDER THE VALVE AND REMAIN IN PLACE UNTIL THE TAP MACHINE IS REMOVED AND THE TAP IS COMPLETED.

   NOTE: IF THE CONTRACTOR HAS NOT FULFILLED HIS RESPONSIBILITIES, AS STATED ABOVE, PRIOR TO THE ARRIVAL OF PASCO COUNTY UTILITIES OPERATIONS AND MAINTENANCE TAPPING CREW, THERE WILL BE AN ADDITIONAL CHARGE OF $95.00.

PAUL E. SKIDMORE
LICENSE NO. 39631
STATE OF FLORIDA
PROFESSIONAL ENGINEER

JOB NO.	EPN	DATE	DRAWN	CHECKED	QUAL.
506-100F	213	10-1-2015	RAH	RAH	PES

NO.	DATE	REVISIONS	BY

DESIGNED FOR
ASTURIA COMMUNITY DEVELOPMENT DISTRICT
1001 PALENCIA CLUB DRIVE, ST. AUGUSTINE, FLORIDA 32095
PHONE: (904) 810-0500 - FAX: (904) 810-0024 - E-MAIL: sean.mariano@inwis.com

PROJECT NAME
Asturia

SHEET NAME
UTILITY CONNECTION PLAN & PROFILE

PHASE 2

ENGINEER / SURVEYOR
FLORIDA DESIGN CONSULTANTS, INC.
THINK IT. ACHIEVE IT.
3030 STARKEY BOULEVARD, NEW PORT RICHEY, FLORIDA 34655
PHONE: (800) 532 - 1047 FAX: (727) 848 - 3648 E-MAIL pskidmore@fldesign.com
WWW.FLDESIGN.COM C.A. NO. 7421

PLAN SET DATE
October 7, 2015

SHEET
25 OF 52

© Copyright 2015 Florida Design Consultants, Inc. Drawings and concepts may not be used or reproduced without written permission.

K:\213\Proj\Civil\Docs\Plans\Phase 2\213_ASTURIA-PH2-PUTIL-7.dwg - Oct 20, 2015 @ 1:32pm - ehall

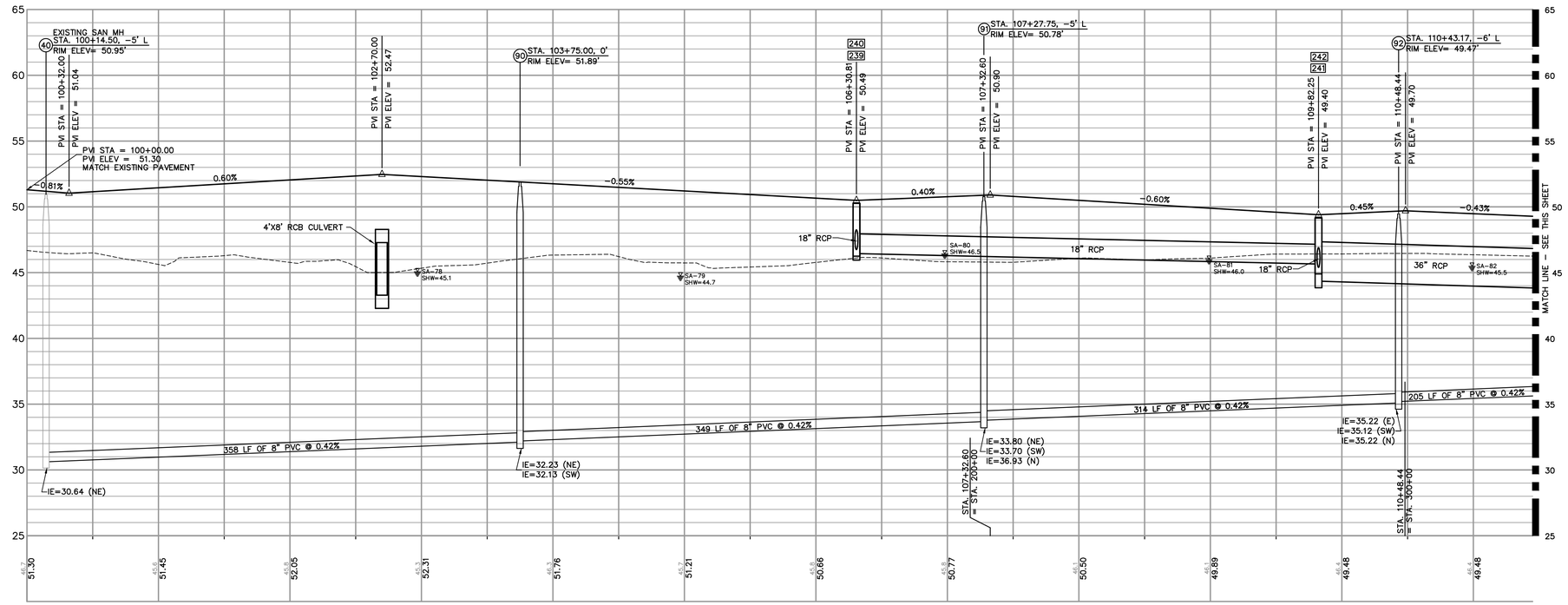

AVILES PARKWAY
SCALE: 1"=50' HOR., 1"=5' VERT.

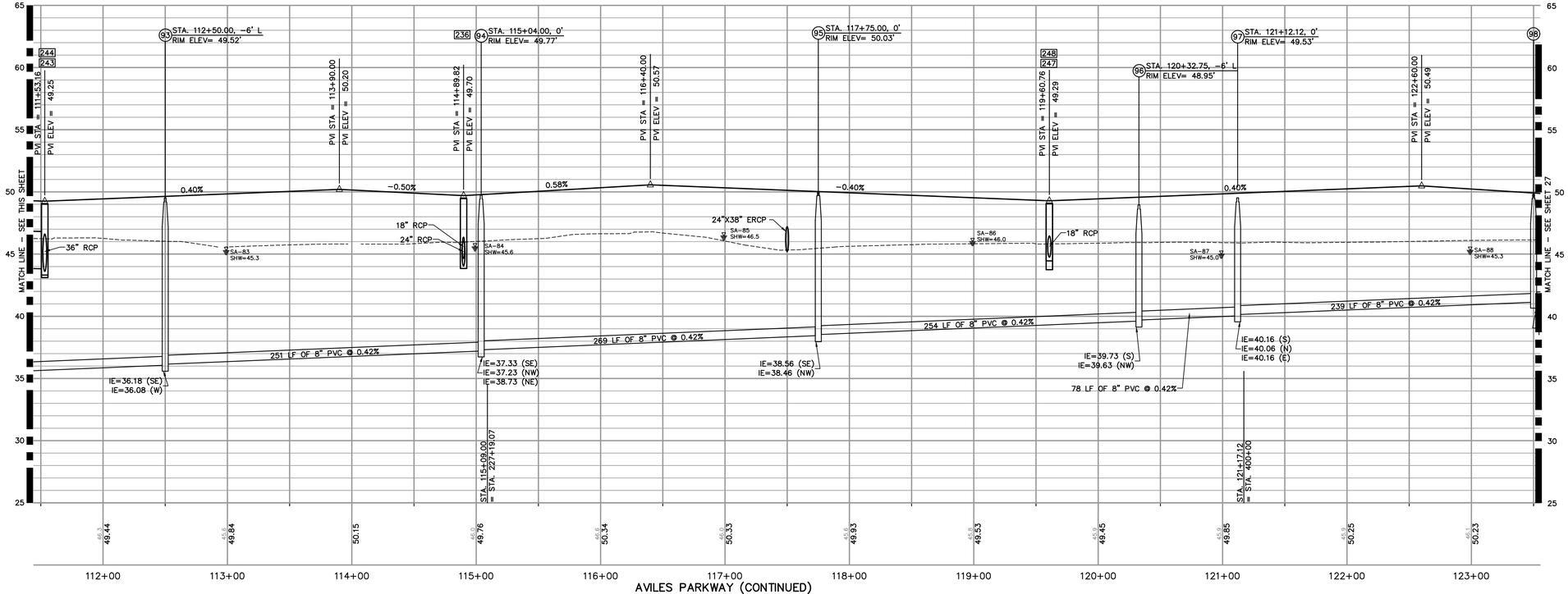

AVILES PARKWAY (CONTINUED)

PAUL E. SKIDMORE
LICENSE NO. 39631
STATE OF FLORIDA
PROFESSIONAL ENGINEER

JOB NO.	EPN	DATE	DRAWN	CHECKED	APPROVED	QC
506-100F	213	10-1-2015	RAH	RAH	PES	

NO.	DATE	REVISIONS

DESIGNED FOR
ASTURIA COMMUNITY DEVELOPMENT DISTRICT
2005 PALACIO CLUB DRIVE, ST. AUGUSTINE, FLORIDA 32092
PHONE: (904) 810-0500 - FAX: (904) 810-0525 - E-MAIL: sean.mariano@inwis.com

PROJECT NAME
Asturia | PHASE 2

SHEET NAME
ROADWAY PROFILES (1)

ENGINEER / SURVEYOR
FLORIDA DESIGN CONSULTANTS, INC.
THINK IT. ACHIEVE IT.
3030 STARKEY BOULEVARD, NEW PORT RICHEY, FLORIDA 34655
PHONE: (800) 532 - 1047 FAX: (727) 848 - 3648 WWW.FLDESIGN.COM C.A. NO. 7421
E-MAIL: peskimore@fldesign.com

PLAN SET DATE
October 7, 2015

SHEET 26 OF 52

©Copyright 2015 Florida Design Consultants, Inc. Drawings and concepts may not be used or reproduced without written permission.

K:\213\ProData\ConstDocs\Plans\Phase 2\213_ASTURIA-PH2-PROF-1.dwg - Oct 20, 2015 @ 1:32pm - rhall

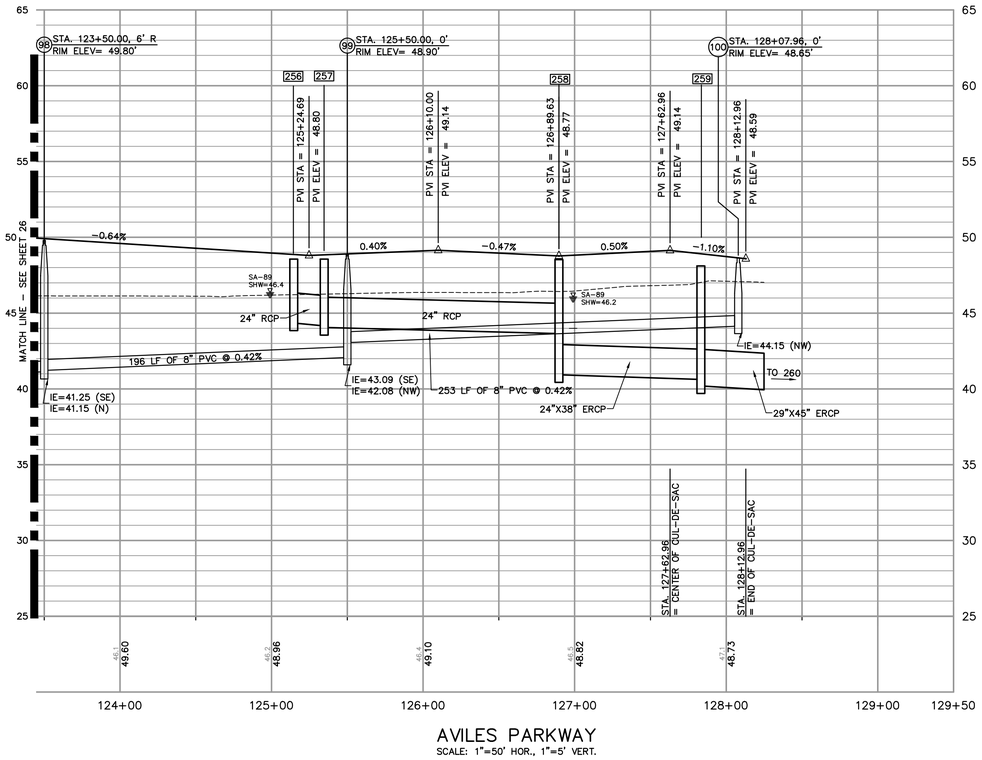

AVILES PARKWAY

SCALE: 1"=50' HOR., 1"=5' VERT.

PAUL E. SKIDMORE
LICENSE
NO. 39631
STATE OF FLORIDA
PROFESSIONAL ENGINEER

JOB NO.	EFN	DATE	DESIGNED	DRAWN	CHECKED	APP'D BY
506-100F	213	10-1-2015	RAH	RAH	PES	

NO.	DATE	REVISIONS

DESIGNED FOR
ASTURIA COMMUNITY DEVELOPMENT DISTRICT
605 PALENCIA CLUB DRIVE, ST. AUGUSTINE, FLORIDA 32095
PHONE: (904) 810-0500 - FAX: (904) 810-0525 - E-MAIL: sean.manson@hines.com

PROJECT NAME
Asturia
PHASE 2

SHEET NAME
ROADWAY PROFILES (2)

ENGINEER / SURVEYOR
FLORIDA DESIGN CONSULTANTS, INC.
THINK IT. ACHIEVE IT.
3030 STARKEY BOULEVARD, NEW PORT RICHEY, FLORIDA 34655
PHONE: (800) 532 - 1047 FAX: (727) 848 - 3648 WWW.FLDESIGN.COM C.A. NO. 7421
E-MAIL: pskidmore@fldesign.com

PLAN SET DATE
October 7, 2015

SHEET
27 OF 52

©Copyright 2015 Florida Design Consultants, Inc. Drawings and concepts may not be used or reproduced without written permission.

K:\213\ProjData\ConstDocs\Plans\Phase 2\213_ASTURIA-PH2-PPROF-1.dwg - Oct 20, 2015 @ 1:32pm - rhall

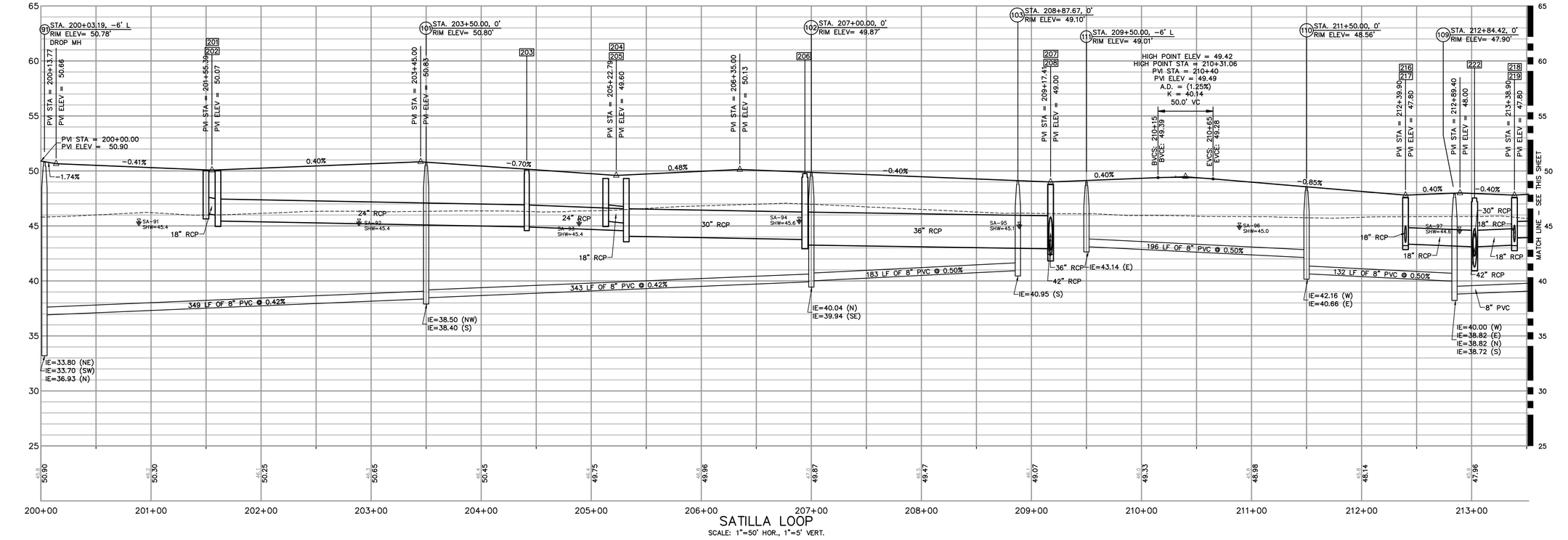

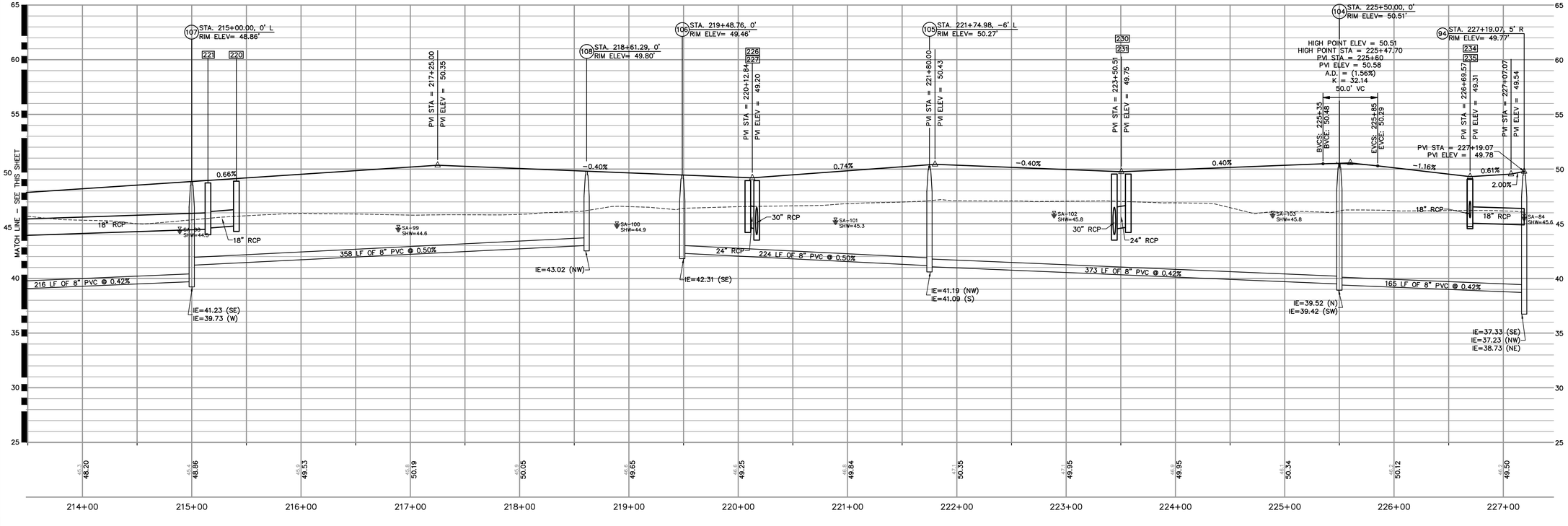

PAUL E. SKIDMORE
LICENSE
NO. 39631
STATE OF
FLORIDA
PROFESSIONAL ENGINEER

JOB NO.	EPN	DATE	DESIGNED	DRAWN	CHECKED
506-100F	213	10-1-2015	RAH	RAH	PES

NO.	DATE	REVISIONS

DESIGNED FOR
ASTURIA COMMUNITY DEVELOPMENT DISTRICT
1001 PALMYRA CLUB DRIVE, ST. AUGUSTINE, FLORIDA 32095
PHONE: (904) 810-0025 - FAX: (904) 810-0025 - E-MAIL: sean.mamaw@hnwa.com

PROJECT NAME
Asturia | PHASE 2

SHEET NAME
ROADWAY PROFILES (3)

ENGINEER / SURVEYOR
FLORIDA DESIGN CONSULTANTS, INC.
— THINK IT. ACHIEVE IT. —
3030 STARKEY BOULEVARD, NEW PORT RICHEY, FLORIDA 34655
PHONE: (800) 532 - 1047 FAX: (727) 848 - 3648 WWW.FLDESIGN.COM C.A. NO. 7421
E-MAIL: pskidmore@fldesign.com

PLAN SET DATE
October 7, 2015

SHEET
28 OF 52

©Copyright 2015 Florida Design Consultants, Inc. Drawings and concepts may not be used or reproduced without written permission.

K:\2131\ProjData\ConstDocs\Plans\Phase 2\2131_ASTURIA-PH2-4PROF-2.dwg - Oct 20, 2015 @ 1:33pm - rhall

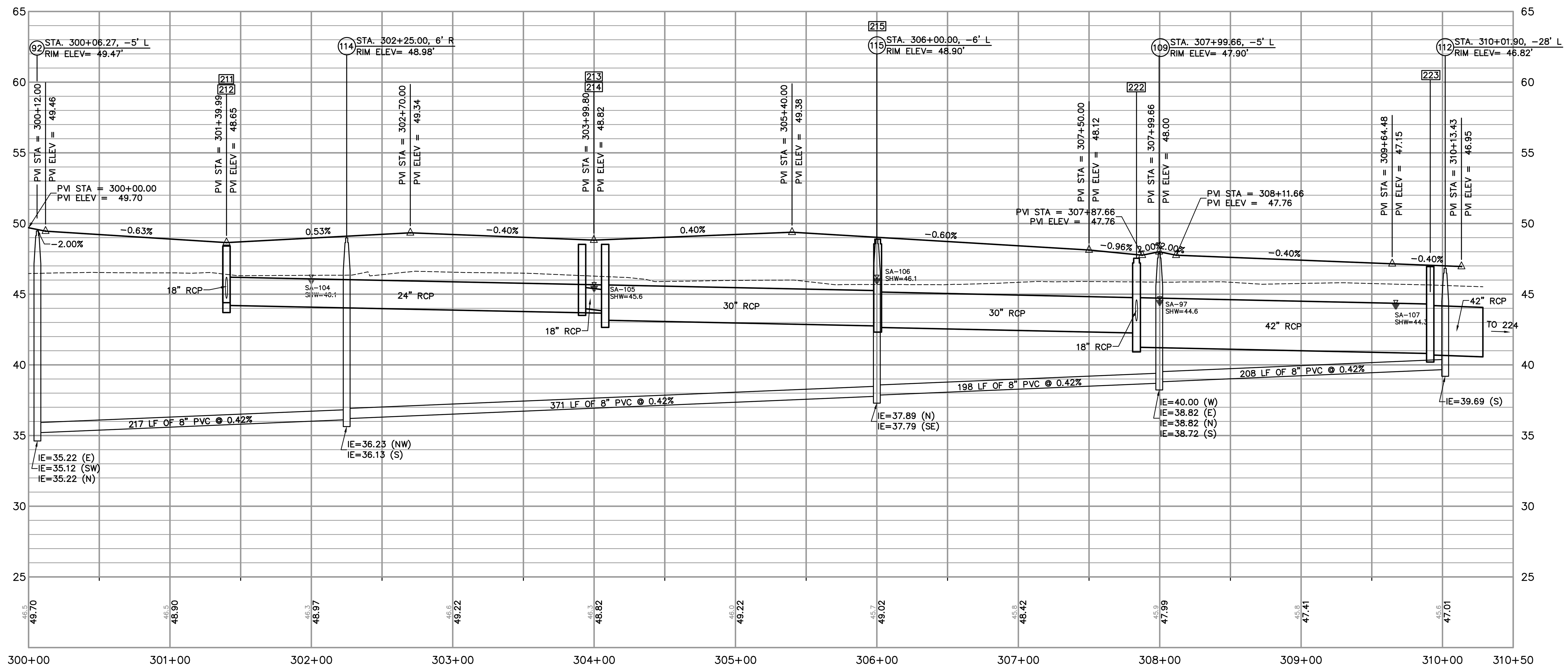

POSADA LANE

SCALE: 1"=50' HOR., 1"=5' VERT.

PAUL E. SKIDMORE LICENSE NO. 39631 STATE OF FLORIDA PROFESSIONAL ENGINEER

JOB NO.	EPN	DATE	DESIGNED	DRAWN	CHECKED	Q.C.
506-100F	213	10-1-2015	RAH	RAH	PES	

REVISIONS — NO. / DATE / APP'D BY

DESIGNED FOR
ASTURIA COMMUNITY DEVELOPMENT DISTRICT
605 PALENCIA CLUB DRIVE, ST. AUGUSTINE, FLORIDA 32095
PHONE: (904) 810-0500 - FAX: (904) 810-0525 - E-MAIL: sean.manson@hines.com

PROJECT NAME: Asturia — **PHASE 2**

SHEET NAME: ROADWAY PROFILES (4)

ENGINEER / SURVEYOR
FLORIDA DESIGN CONSULTANTS, INC.
THINK IT. ACHIEVE IT.
3030 STARKEY BOULEVARD, NEW PORT RICHEY, FLORIDA 34655
PHONE: (800) 532-1047 FAX: (727) 848-3648 WWW.FLDESIGN.COM C.A. NO. 7421
E-MAIL: pskidmore@fldesign.com

PLAN SET DATE October 7, 2015

©Copyright 2015 Florida Design Consultants, Inc. Drawings and concepts may not be used or reproduced without written permission.
K:\213\ProjData\ConstDocs\Plans\Phase 2\213_ASTURIA-PH2-PPROF-3.dwg - Oct 20, 2015 @ 1:33pm - rhall

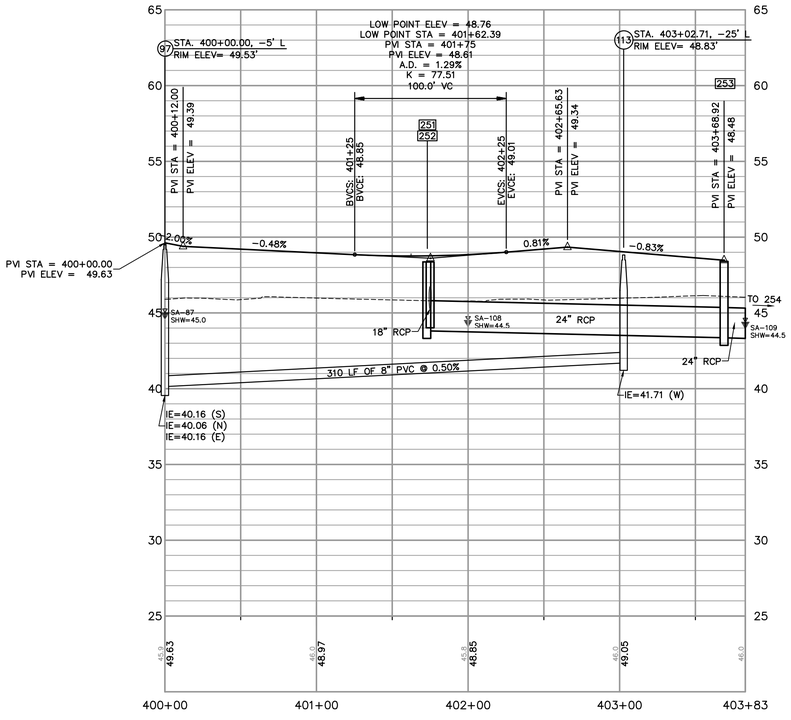

SEVARES COURT

SCALE: 1"=50' HOR., 1"=5' VERT.

PAUL E. SKIDMORE
LICENSE
NO. 39631
STATE OF FLORIDA
PROFESSIONAL ENGINEER

JOB NO.	EPN	DATE	DESIGNED	DRAWN	CHECKED	APPD BY
506-100F	213	10-1-2015	RAH	RAH	PES	

NO.	DATE	REVISIONS

DESIGNED FOR
ASTURIA COMMUNITY DEVELOPMENT DISTRICT
605 PALENCIA CLUB DRIVE, ST. AUGUSTINE, FLORIDA 32095
PHONE: (904) 810-0500 - FAX: (904) 810-0525 - E-MAIL: sean.manson@hines.com

PROJECT NAME: Asturia | PHASE 2

SHEET NAME: ROADWAY PROFILES (5)

ENGINEER / SURVEYOR
FLORIDA DESIGN CONSULTANTS, INC.
THINK IT. ACHIEVE IT.
3030 STARKEY BOULEVARD, NEW PORT RICHEY, FLORIDA 34655
PHONE: (800) 532 - 1047 FAX: (727) 848 - 3648 WWW.FLDESIGN.COM C.A. NO. 7421
E-MAIL: pskidmore@fldesign.com

PLAN SET DATE
October 7, 2015

SHEET
30 OF 52

© Copyright 2015 Florida Design Consultants, Inc. Drawings and concepts may not be used or reproduced without written permission.

K:\213\Proj\Data\ConstDocs\Plans\Phase 2\213_ASTURIA-PH2-PPROF-4.dwg - Oct 20, 2015 @ 1:34pm - rhall

N

0 25 50 100

SPECIAL NOTES:

1. TRAFFIC SIGN BREAKAWAY POSTS: ALL TRAFFIC CONTROL DEVICES (SIGNS) ARE TO BE INSTALLED WITH BREAK-AWAY POSTS IN CONFORMANCE WITH THE MUTCD MANUAL, LATEST EDITION.

2. TRAFFIC SIGN HEIGHTS: THE MINIMUM HEIGHT OF SIGNS ALONG THE SIDE OF THE ROAD ARE MEASURED VERTICALLY FROM THE BOTTOM OF THE SIGN TO THE TOP OF THE CURB (OR IN THE ABSENCE OF CURB MEASURED VERTICALLY FROM THE BOTTOM OF THE SIGN TO THE NEAR EDGE OF THE TRAVELED WAY) SHALL BE 7.0 FEET IN CONFORMANCE WITH THE MUTCD, LATEST EDITION. THE HEIGHT TO THE BOTTOM OF A SECONDARY SIGN MOUNTED BELOW ANOTHER SIGN MAY BE 1.0 FEET LESS, MEASURED VERTICALLY, OR 6.0 FEET IN HEIGHT.

SEE SHEET 36 FOR SIGNAGE AND PAVEMENT MARKING NOTES

SIGNAGE LEGEND

- = Street Name Sign (2xD3)
- = Stop Sign (R1-1)
- = Warning Sign (W1-1 R or L) with W13-1
- = Regulatory Speed Sign (R2-1 20 MPH) with No Parking Sign (R8-3A) and supplemental plate (ANY STREET)
- = Dead End Sign (W14-1)
- = No Outlet (W14-2)
- = Dead End (W14-1A)
- = Wildlife Crossing Sign
- = Reflective Marker Sign (OM4)
- = Type III Barricade

TYPES OF PERMANENT LONGITUDINAL LINES

BASIC COLOR RULE

White lines separate flows in the same direction.
Yellow lines separate flows in the opposite direction.
Yellow dotted lines may be used in special cases.

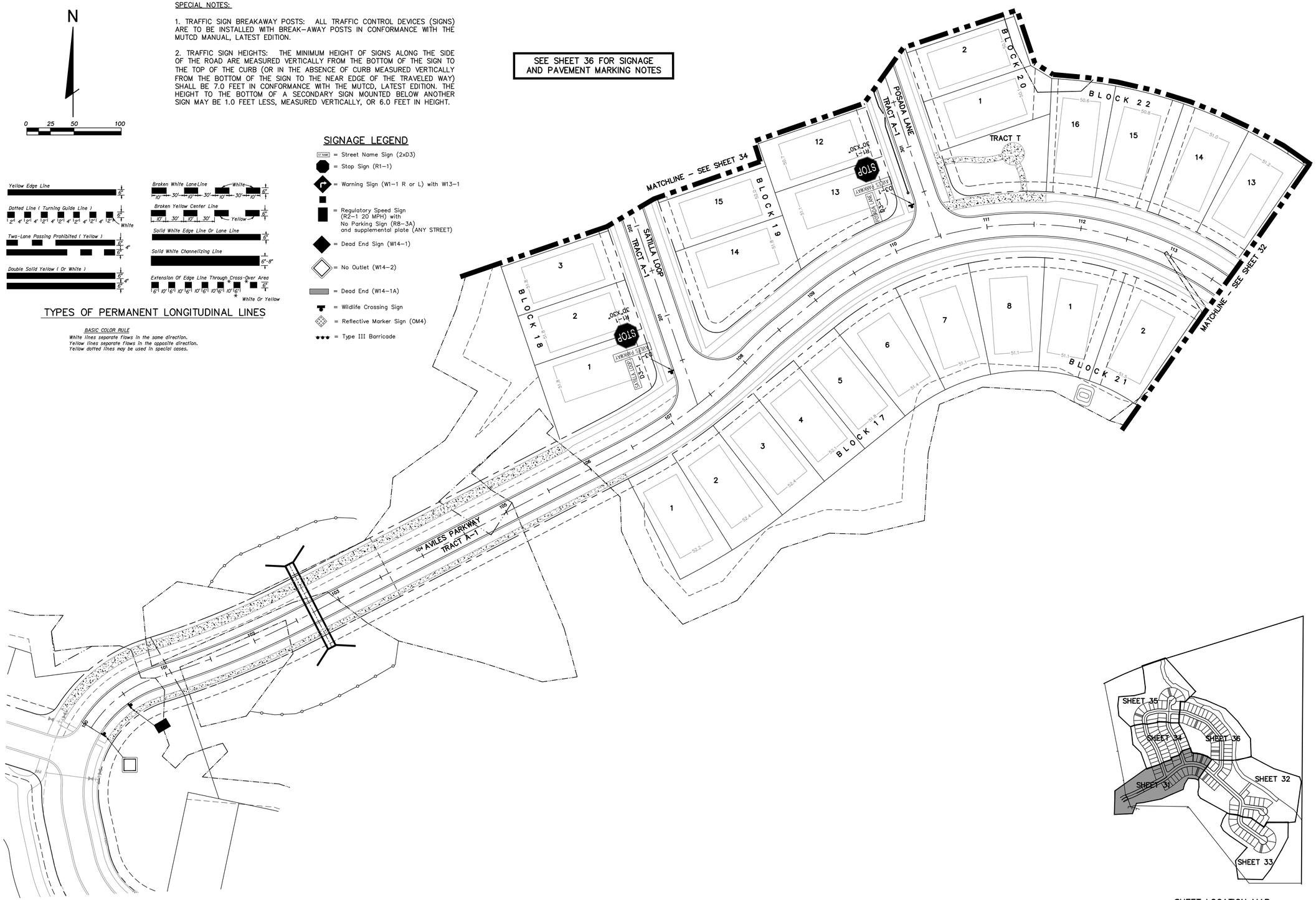

SHEET LOCATION MAP

PAUL E. SKIDMORE LICENSE NO. 39631 STATE OF FLORIDA PROFESSIONAL ENGINEER

JOB NO.	EPN	DATE	DRAWN	CHECKED	QUALITY CONTROL
506-100F	213	10-1-2015	RAH	RAH	PES

NO.	DATE	REVISIONS

DESIGNED FOR
ASTURIA COMMUNITY DEVELOPMENT DISTRICT
2005 PALENCIA CLUB DRIVE, ST. AUGUSTINE, FLORIDA 32095
PHONE: (904) 810-0500 - FAX: (904) 810-0525 - E-MAIL: sean.mariano@fmmi.com

PROJECT NAME
Asturia
PHASE 2

SHEET NAME
SIGNAGE AND PAVEMENT MARKING PLANS (1)

ENGINEER / SURVEYOR
FLORIDA DESIGN CONSULTANTS, INC.
— THINK IT. ACHIEVE IT. —
3030 STARKEY BOULEVARD, NEW PORT RICHEY, FLORIDA 34655
PHONE: (800) 532 - 1047 FAX: (727) 848 - 3648 WWW.FLDESIGN.COM C.A. NO. 7421
E-MAIL: pskidmore@fldesign.com

PLAN SET DATE
October 7, 2015

SHEET 31 OF 52

©Copyright 2015 Florida Design Consultants, Inc. Drawings and concepts may not be used or reproduced without written permission.

K:\213\Pro Data\ConstDocs\Plans\Phase 2\213_ASTURIA-PH2-PSPM-1.dwg - Oct 20, 2015 @ 1:34pm - rhall

MATCHLINE – SEE SHEET 31

MATCHLINE – SEE SHEET 36

BLOCK 22

BLOCK 23

BLOCK 21

BLOCK 25

BLOCK 24

SATILLA LOOP
TRACT A–1

TRACT AN

TRACT AM

TRACT U

118 AVILES PARKWAY
TRACT A–1

SEVARES COURT
TRACT A–1

STOP

D3–1

D3–1P
"LOCAL USE ONLY"

R=95.00'

R=85.00'

SPECIAL NOTES:

1. TRAFFIC SIGN BREAKAWAY POSTS: ALL TRAFFIC CONTROL DEVICES (SIGNS) ARE TO BE INSTALLED WITH BREAK–AWAY POSTS IN CONFORMANCE WITH THE MUTCD MANUAL, LATEST EDITION.

2. TRAFFIC SIGN HEIGHTS: THE MINIMUM HEIGHT OF SIGNS ALONG THE SIDE OF THE ROAD ARE MEASURED VERTICALLY FROM THE BOTTOM OF THE SIGN TO THE TOP OF THE CURB (OR IN THE ABSENCE OF CURB MEASURED VERTICALLY FROM THE BOTTOM OF THE SIGN TO THE NEAR EDGE OF THE TRAVELED WAY) SHALL BE 7.0 FEET IN CONFORMANCE WITH THE MUTCD, LATEST EDITION. THE HEIGHT TO THE BOTTOM OF A SECONDARY SIGN MOUNTED BELOW ANOTHER SIGN MAY BE 1.0 FEET LESS, MEASURED VERTICALLY, OR 6.0 FEET IN HEIGHT.

SEE SHEET 36 FOR SIGNAGE AND PAVEMENT MARKING NOTES

N

0 25 50 100

SIGNAGE LEGEND

- = Street Name Sign (2xD3)
- = Stop Sign (R1–1)
- = Warning Sign (W1–1 R or L) with W13–1
- = Regulatory Speed Sign (R2–1 20 MPH) with No Parking Sign (R8–3A) and supplemental plate (ANY STREET)
- = Dead End Sign (W14–1)
- = No Outlet (W14–2)
- = Dead End (W14–1A)
- = Wildlife Crossing Sign
- = Reflective Marker Sign (OM4)
- = Type III Barricade

SHEET LOCATION MAP

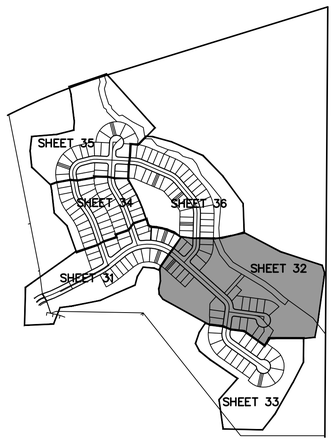

MATCHLINE – SEE SHEET 33

MATCHLINE – SEE SHEET 33

PAUL E. SKIDMORE LICENSE NO. 39631 STATE OF FLORIDA PROFESSIONAL ENGINEER

JOB NO.	EPN	DATE	DRAWN	CHK.
506-100F	213	10-1-2015	RAH	
ESTIMATED			RAH	
APPROVED			PES	

REVISIONS: NO. | DATE | BY

DESIGNED FOR
ASTURIA COMMUNITY DEVELOPMENT DISTRICT
600 PALENCIA CLUB DRIVE, ST. AUGUSTINE, FLORIDA 32095
PHONE: (904) 810-0500 - FAX: (904) 810-0525 - E-MAIL: sean.mawer@fnmis.com

PROJECT NAME: Asturia | PHASE 2

SHEET NAME: SIGNAGE AND PAVEMENT MARKING PLANS (2)

ENGINEER / SURVEYOR
FLORIDA DESIGN CONSULTANTS, INC.
THINK IT. ACHIEVE IT.
3030 STARKEY BOULEVARD, NEW PORT RICHEY, FLORIDA 34655
PHONE: (800) 532 - 1047 FAX: (727) 848 - 3648 WWW.FLDESIGN.COM C.A. NO. 7421
E-MAIL: pskidmore@fldesign.com

PLAN SET DATE
October 7, 2015

SHEET 32 OF 52

© Copyright 2015 Florida Design Consultants, Inc. Drawings and concepts may not be used or reproduced without written permission.

K:\21JV\Proj\Data\CivilDocs\Plans\Phase 2\213_ASTURIA-PH2-PSPM-2.dwg - Oct 20, 2015 @ 1:34pm - rhall

SPECIAL NOTES:

1. TRAFFIC SIGN BREAKAWAY POSTS: ALL TRAFFIC CONTROL DEVICES (SIGNS) ARE TO BE INSTALLED WITH BREAK-AWAY POSTS IN CONFORMANCE WITH THE MUTCD MANUAL, LATEST EDITION.

2. TRAFFIC SIGN HEIGHTS: THE MINIMUM HEIGHT OF SIGNS ALONG THE SIDE OF THE ROAD ARE MEASURED VERTICALLY FROM THE BOTTOM OF THE SIGN TO THE TOP OF THE CURB (OR IN THE ABSENCE OF CURB MEASURED VERTICALLY FROM THE BOTTOM OF THE SIGN TO THE NEAR EDGE OF THE TRAVELED WAY) SHALL BE 7.0 FEET IN CONFORMANCE WITH THE MUTCD, LATEST EDITION. THE HEIGHT TO THE BOTTOM OF A SECONDARY SIGN MOUNTED BELOW ANOTHER SIGN MAY BE 1.0 FEET LESS, MEASURED VERTICALLY, OR 6.0 FEET IN HEIGHT.

SEE SHEET 36 FOR SIGNAGE AND PAVEMENT MARKING NOTES

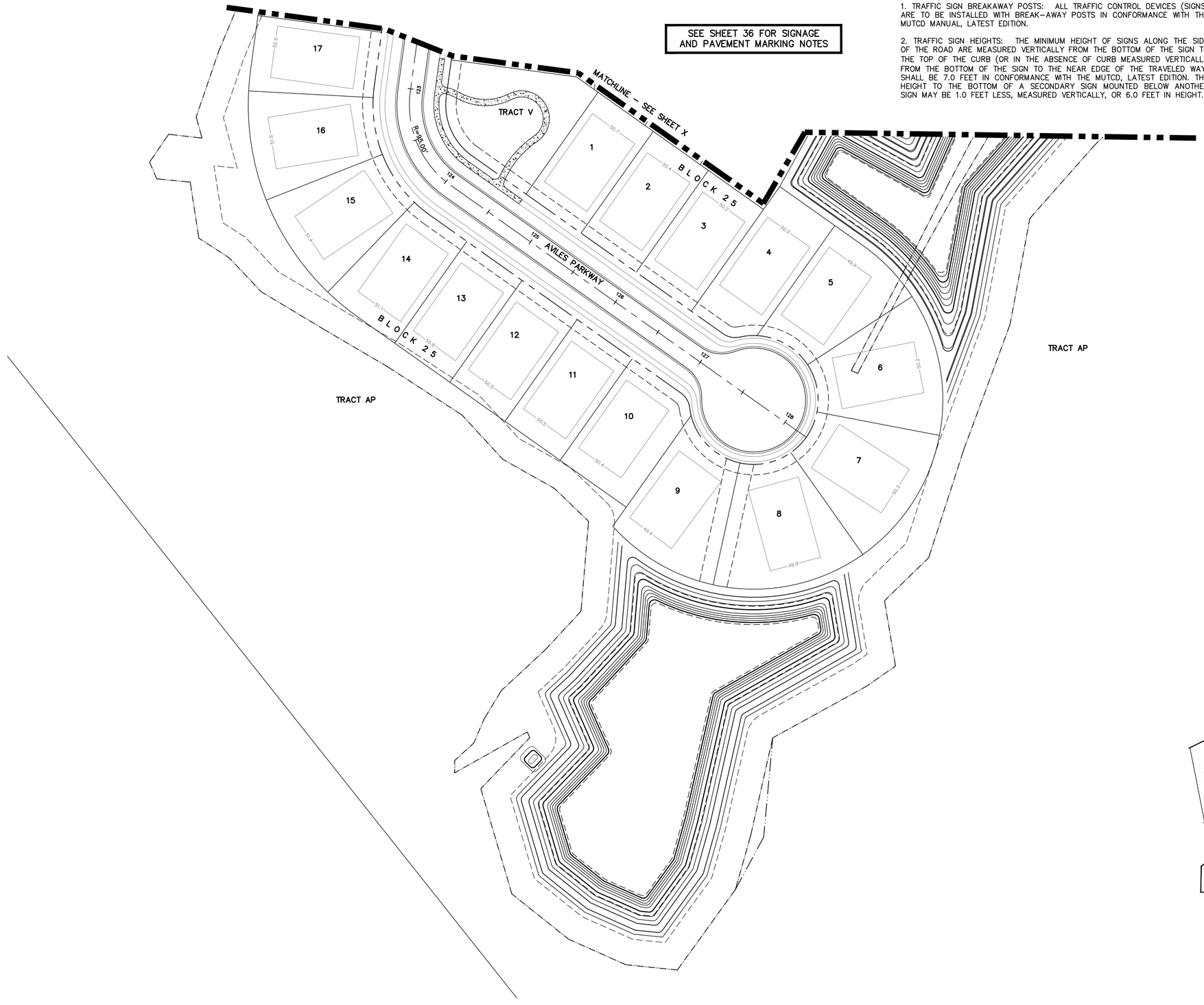

N

0 25 50 100

SIGNAGE LEGEND

- = Street Name Sign (2xD3)
- = Stop Sign (R1-1)
- = Warning Sign (W1-1 R or L) with W13-1
- = Regulatory Speed Sign (R2-1 20 MPH) with No Parking Sign (R8-3A) and supplemental plate (ANY STREET)
- = Dead End Sign (W14-1)
- = No Outlet (W14-2)
- = Dead End (W14-1A)
- = Wildlife Crossing Sign
- = Reflective Marker Sign (OM4)
- = Type III Barricade

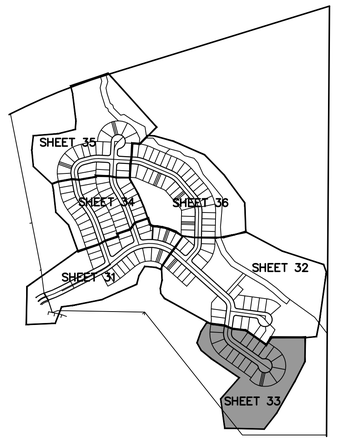

SHEET LOCATION MAP

PAUL E. SKIDMORE LICENSE NO. 39631 STATE OF FLORIDA PROFESSIONAL ENGINEER

JOB NO.	EPN	DATE	DESIGNED	DRAWN	CHECKED	Q.C.	APP'D BY
506-100F	213	10-1-2015	RAH	RAH	PES		

NO.	DATE	REVISIONS

DESIGNED FOR
ASTURIA COMMUNITY DEVELOPMENT DISTRICT
605 PALENCIA CLUB DRIVE, ST. AUGUSTINE, FLORIDA 32095
PHONE: (904) 810-0500 - FAX: (904) 810-0525 - E-MAIL: sean.manson@hines.com

PROJECT NAME: Asturia | PHASE 2

SHEET NAME: SIGNAGE AND PAVEMENT MARKING PLANS (3)

ENGINEER / SURVEYOR
FLORIDA DESIGN CONSULTANTS, INC.
THINK IT. ACHIEVE IT.
3030 STARKEY BOULEVARD, NEW PORT RICHEY, FLORIDA 34655
PHONE: (800) 532 - 1047 FAX: (727) 848 - 3648 WWW.FLDESIGN.COM C.A. NO. 7421
E-MAIL: pskidmore@fldesign.com

PLAN SET DATE
October 7, 2015

SHEET 33 OF 52

©Copyright 2015 Florida Design Consultants, Inc. Drawings and concepts may not be used or reproduced without written permission.

K:\213\ProjData\ConstDocs\Plans\Phase 2\213_ASTURIA-PH2-PSPM-3.dwg – Oct 20, 2015 @ 1:35pm – rhall

SPECIAL NOTES:

1. TRAFFIC SIGN BREAKAWAY POSTS: ALL TRAFFIC CONTROL DEVICES (SIGNS) ARE TO BE INSTALLED WITH BREAK-AWAY POSTS IN CONFORMANCE WITH THE MUTCD MANUAL, LATEST EDITION.

2. TRAFFIC SIGN HEIGHTS: THE MINIMUM HEIGHT OF SIGNS ALONG THE SIDE OF THE ROAD ARE MEASURED VERTICALLY FROM THE BOTTOM OF THE SIGN TO THE TOP OF THE CURB (OR IN THE ABSENCE OF CURB MEASURED VERTICALLY FROM THE BOTTOM OF THE SIGN TO THE NEAR EDGE OF THE TRAVELED WAY) SHALL BE 7.0 FEET IN CONFORMANCE WITH THE MUTCD, LATEST EDITION. THE HEIGHT TO THE BOTTOM OF A SECONDARY SIGN MOUNTED BELOW ANOTHER SIGN MAY BE 1.0 FEET LESS, MEASURED VERTICALLY, OR 6.0 FEET IN HEIGHT.

SEE SHEET 36 FOR SIGNAGE AND PAVEMENT MARKING NOTES

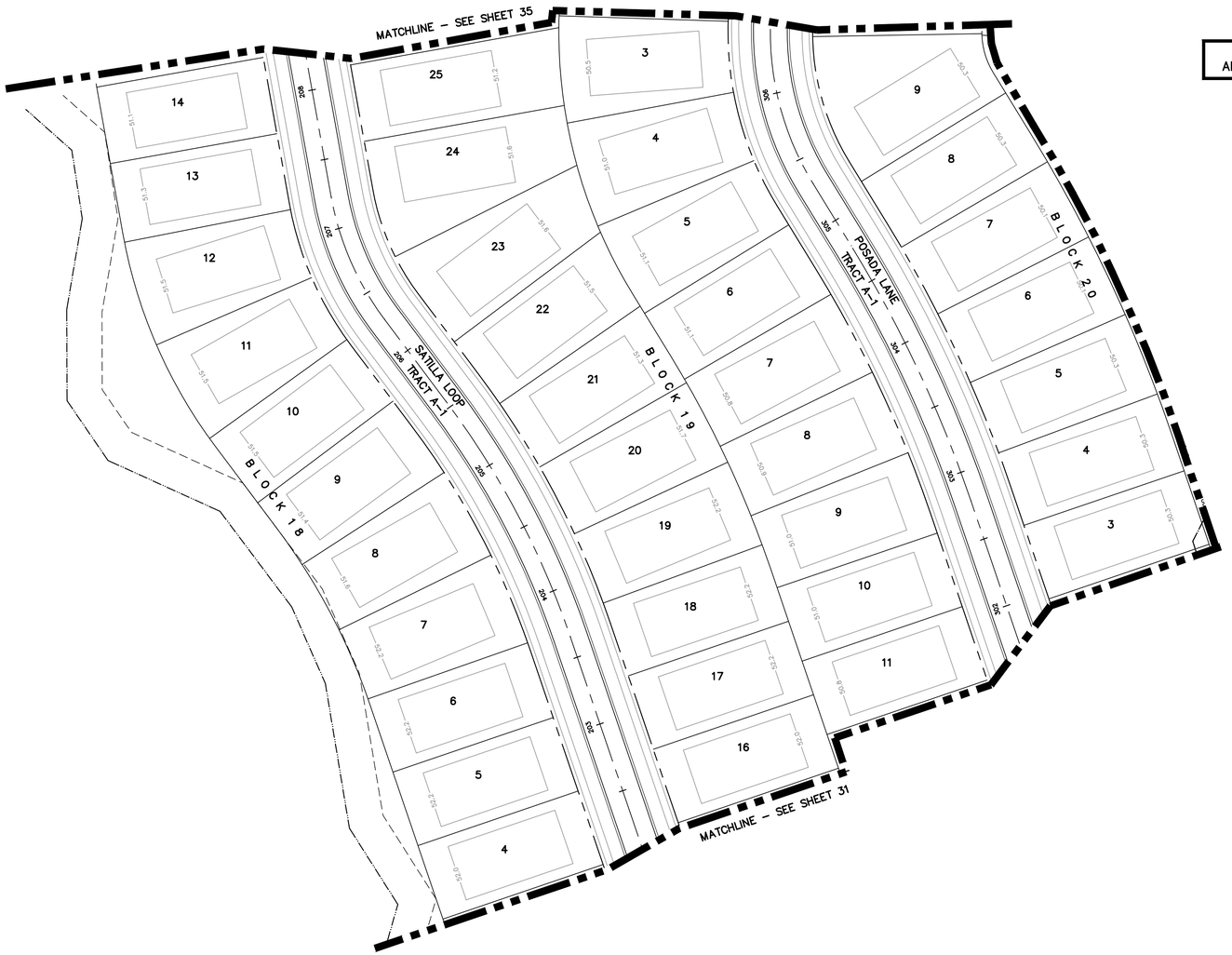

N

0 25 50 100

SIGNAGE LEGEND

- ST NAME = Street Name Sign (2xD3)
- = Stop Sign (R1-1)
- = Warning Sign (W1-1 R or L) with W13-1
- = Regulatory Speed Sign (R2-1 20 MPH) with No Parking Sign (R8-3A) and supplemental plate (ANY STREET)
- = Dead End Sign (W14-1)
- = No Outlet (W14-2)
- = Dead End (W14-1A)
- = Wildlife Crossing Sign
- = Reflective Marker Sign (OM4)
- = Type III Barricade

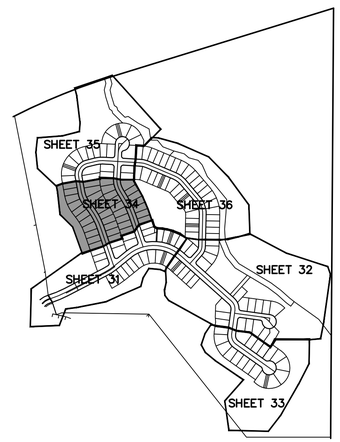

SHEET LOCATION MAP

PAUL E. SKIDMORE LICENSE NO. 39631 STATE OF FLORIDA PROFESSIONAL ENGINEER

JOB NO.	EPN	DATE	DESIGNED	DRAWN	CHECKED
506-100F	213	10-1-2015	RAH	RAH	PES

NO.	DATE	REVISIONS	BY

DESIGNED FOR
ASTURIA COMMUNITY DEVELOPMENT DISTRICT
2005 PALENCIA CLUB DRIVE, ST. AUGUSTINE, FLORIDA 32095
PHONE: (904) 810-0500 - FAX: (904) 810-0525 - E-MAIL: sean.mcmanus@dhmres.com

PROJECT NAME
Asturia | PHASE 2

SHEET NAME
SIGNAGE AND PAVEMENT MARKING PLANS (4)

ENGINEER / SURVEYOR
FLORIDA DESIGN CONSULTANTS, INC.
— THINK IT. ACHIEVE IT. —
3030 STARKEY BOULEVARD, NEW PORT RICHEY, FLORIDA 34655
PHONE: (800) 532 - 1047 FAX: (727) 848 - 3648 WWW.FLDESIGN.COM C.A. NO. 7421
E-MAIL: pskidmore@fldesign.com

PLAN SET DATE
October 7, 2015

SHEET 34 OF 52

©Copyright 2015 Florida Design Consultants, Inc. Drawings and concepts may not be used or reproduced without written permission.

K:\213\ProjData\ConstDocs\Plans\Phase 2\213_ASTURIA--PH2--PSP4-4.dwg -- Oct 20, 2015 @ 1:35pm -- rhall

SPECIAL NOTES:

1. TRAFFIC SIGN BREAKAWAY POSTS: ALL TRAFFIC CONTROL DEVICES (SIGNS) ARE TO BE INSTALLED WITH BREAK-AWAY POSTS IN CONFORMANCE WITH THE MUTCD MANUAL, LATEST EDITION.

2. TRAFFIC SIGN HEIGHTS: THE MINIMUM HEIGHT OF SIGNS ALONG THE SIDE OF THE ROAD ARE MEASURED VERTICALLY FROM THE BOTTOM OF THE SIGN TO THE TOP OF THE CURB (OR IN THE ABSENCE OF CURB MEASURED VERTICALLY FROM THE BOTTOM OF THE SIGN TO THE NEAR EDGE OF THE TRAVELED WAY) SHALL BE 7.0 FEET IN CONFORMANCE WITH THE MUTCD, LATEST EDITION. THE HEIGHT TO THE BOTTOM OF A SECONDARY SIGN MOUNTED BELOW ANOTHER SIGN MAY BE 1.0 FEET LESS, MEASURED VERTICALLY, OR 6.0 FEET IN HEIGHT.

SEE SHEET 36 FOR SIGNAGE AND PAVEMENT MARKING NOTES

N

0 25 50 100

SIGNAGE LEGEND

- = Street Name Sign (2xD3)
- = Stop Sign (R1-1)
- = Warning Sign (W1-1 R or L) with W13-1
- = Regulatory Speed Sign (R2-1 20 MPH) with No Parking Sign (R8-3A) and supplemental plate (ANY STREET)
- = Dead End Sign (W14-1)
- = No Outlet (W14-2)
- = Dead End (W14-1A)
- = Wildlife Crossing Sign
- = Reflective Marker Sign (OM4)
- = Type III Barricade

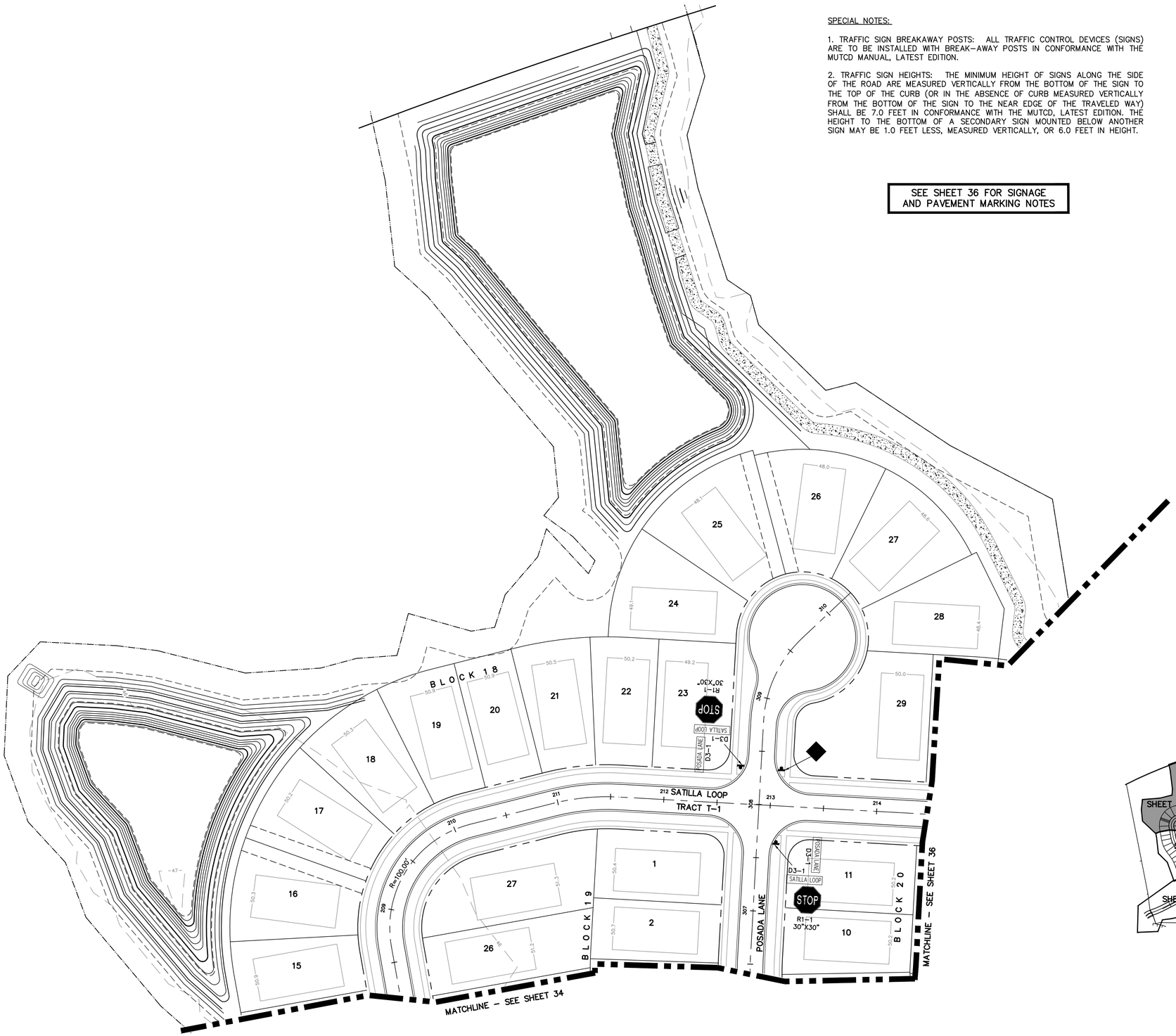

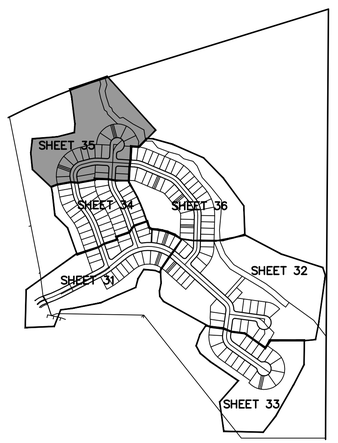

SHEET LOCATION MAP

PAUL E. SKIDMORE LICENSE NO. 39631 STATE OF FLORIDA PROFESSIONAL ENGINEER

JOB NO.	EPN	DATE	DESIGNED	DRAWN	CHECKED	APP'D BY
506-100F	213	10-1-2015	RAH	RAH	PES	

NO.	DATE	REVISIONS

DESIGNED FOR
ASTURIA COMMUNITY DEVELOPMENT DISTRICT
605 PALENCIA CLUB DRIVE, ST. AUGUSTINE, FLORIDA 32095
PHONE: (904) 810-0500 - FAX: (904) 810-0525 - E-MAIL: sean.manson@hines.com

PROJECT NAME: Asturia — PHASE 2

SHEET NAME: SIGNAGE AND PAVEMENT MARKING PLANS (5)

ENGINEER / SURVEYOR
FLORIDA DESIGN CONSULTANTS, INC.
THINK IT. ACHIEVE IT.
3030 STARKEY BOULEVARD, NEW PORT RICHEY, FLORIDA 34655
PHONE: (800) 532 - 1047 FAX: (727) 848 - 3648 WWW.FLDESIGN.COM C.A. NO. 7421
E-MAIL: pskidmore@fldesign.com

PLAN SET DATE
October 7, 2015

SHEET 35 OF 52

©Copyright 2015 Florida Design Consultants, Inc. Drawings and concepts may not be used or reproduced without written permission.

K:\213\Proj\Data\ConstDocs\Plans\Phase 2\213_ASTURIA-PH2-PSPM-5.dwg - Oct 20, 2015 @ 1:35pm - rhall

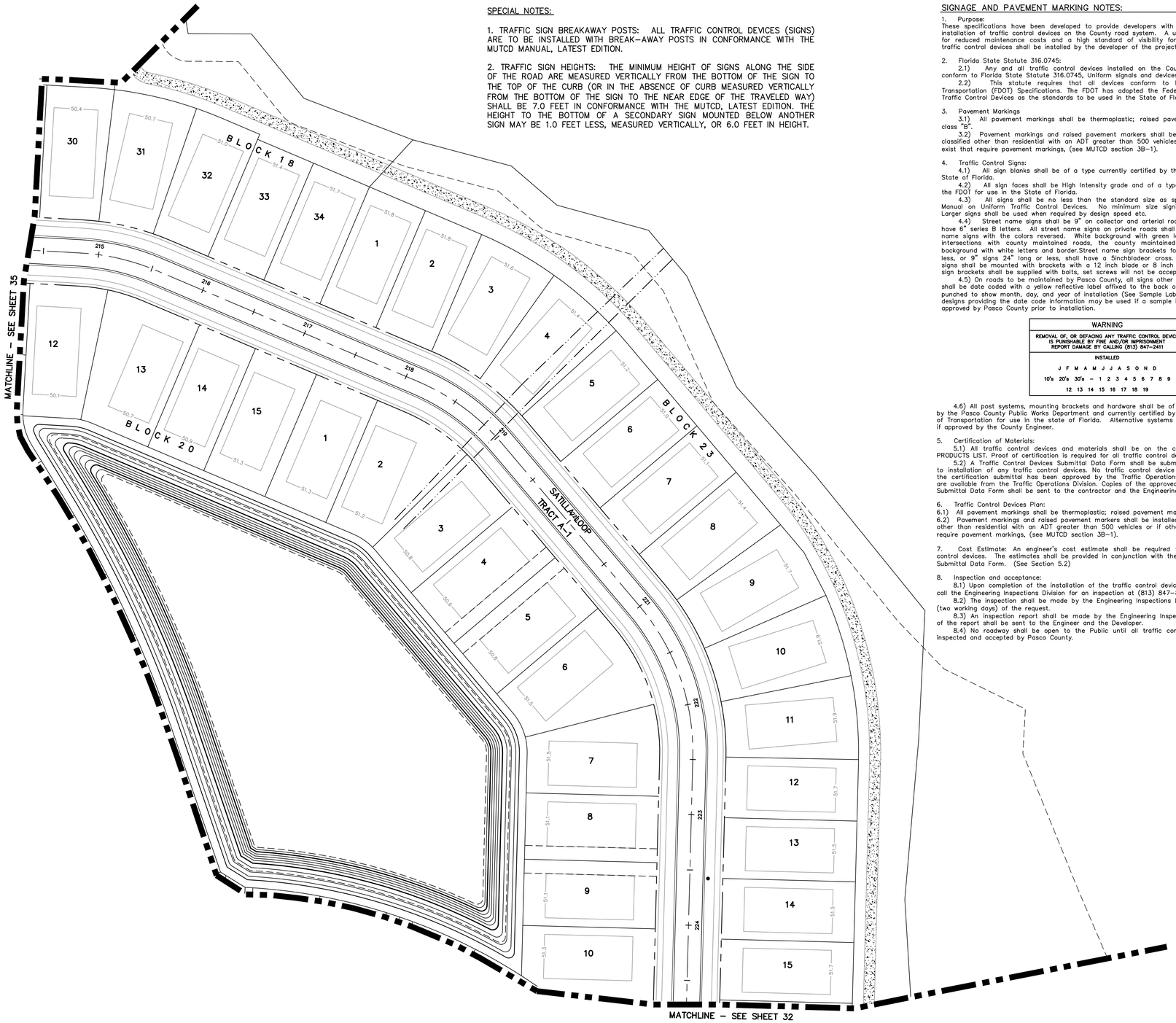

SPECIAL NOTES:

1. TRAFFIC SIGN BREAKAWAY POSTS: ALL TRAFFIC CONTROL DEVICES (SIGNS) ARE TO BE INSTALLED WITH BREAK–AWAY POSTS IN CONFORMANCE WITH THE MUTCD MANUAL, LATEST EDITION.

2. TRAFFIC SIGN HEIGHTS: THE MINIMUM HEIGHT OF SIGNS ALONG THE SIDE OF THE ROAD ARE MEASURED VERTICALLY FROM THE BOTTOM OF THE SIGN TO THE TOP OF THE CURB (OR IN THE ABSENCE OF CURB MEASURED VERTICALLY FROM THE BOTTOM OF THE SIGN TO THE NEAR EDGE OF THE TRAVELED WAY) SHALL BE 7.0 FEET IN CONFORMANCE WITH THE MUTCD, LATEST EDITION. THE HEIGHT TO THE BOTTOM OF A SECONDARY SIGN MOUNTED BELOW ANOTHER SIGN MAY BE 1.0 FEET LESS, MEASURED VERTICALLY, OR 6.0 FEET IN HEIGHT.

SIGNAGE AND PAVEMENT MARKING NOTES:

1. Purpose:
These specifications have been developed to provide developers with a uniform system for installation of traffic control devices on the County road system. A uniform system provides for reduced maintenance costs and a high standard of visibility for drivers. All required traffic control devices shall be installed by the developer of the project.

2. Florida State Statute 316.0745:
2.1) Any and all traffic control devices installed on the County road system shall conform to Florida State Statute 316.0745, Uniform signals and devices.
2.2) This statute requires that all devices conform to Florida Department of Transportation (FDOT) Specifications. The FDOT has adopted the Federal Manual on Uniform Traffic Control Devices as the standards to be used in the State of Florida.

3. Pavement Markings
3.1) All pavement markings shall be thermoplastic; raised pavement makers shall be class "B".
3.2) Pavement markings and raised pavement markers shall be installed on all roads classified other than residential with an ADT greater than 500 vehicles or if other conditions exist that require pavement markings, (see MUTCD section 3B–1).

4. Traffic Control Signs:
4.1) All sign blanks shall be of a type currently certified by the FDOT for use in the State of Florida.
4.2) All sign faces shall be High Intensity grade and of a type currently certified by the FDOT for use in the State of Florida.
4.3) All signs shall be no less than the standard size as specified by the Federal Manual on Uniform Traffic Control Devices. No minimum size signing shall be accepted. Larger signs shall be used when required by design speed etc.
4.4) Street name signs shall be 9" on collector and arterial roads and all signs shall have 6" series B letters. All street name signs on private roads shall be standard D3 street name signs with the colors reversed. White background with green letters and border. At intersections with county maintained roads, the county maintained road shall be green background with white letters and border.Street name sign brackets for 6" signs 30" long or less, or 9" signs 24" long or less, shall have a Sinchbladeor cross. All other street name signs shall be mounted with brackets with a 12 inch blade or 8 inch cross. All street name sign brackets shall be supplied with bolts, set screws will not be accepted.
4.5) On roads to be maintained by Pasco County, all signs other than street names shall be date coded with a yellow reflective label affixed to the back of the sign. It will be punched to show month, day, and year of installation (See Sample Label). Alternate label designs providing the date code information may be used if a sample is submitted and approved by Pasco County prior to installation.

WARNING
REMOVAL OF, OR DEFACING ANY TRAFFIC CONTROL DEVICE IS PUNISHABLE BY FINE AND/OR IMPRISONMENT REPORT DAMAGE BY CALLING (813) 847–2411
INSTALLED
J F M A M J J A S O N D
10's 20's 30's – 1 2 3 4 5 6 7 8 9
12 13 14 15 16 17 18 19

4.6) All post systems, mounting brackets and hardware shall be of a type currently in use by the Pasco County Public Works Department and currently certified by the Florida Department of Transportation for use in the state of Florida. Alternative systems etc. shall only be used if approved by the County Engineer.

5. Certification of Materials:
5.1) All traffic control devices and materials shall be on the current FDOT APPROVED PRODUCTS LIST. Proof of certification is required for all traffic control devices
5.2) A Traffic Control Devices Submittal Data Form shall be submitted for approval prior to installation of any traffic control devices. No traffic control device shall be installed until the certification submittal has been approved by the Traffic Operations Division. These forms are available from the Traffic Operations Division. Copies of the approved Traffic Control Devices Submittal Data Form shall be sent to the contractor and the Engineering Inspections Division.

6. Traffic Control Devices Plan:
6.1) All pavement markings shall be thermoplastic; raised pavement makers shall be class "B".
6.2) Pavement markings and raised pavement markers shall be installed on all roads classified other than residential with an ADT greater than 500 vehicles or if other conditions exist that require pavement markings, (see MUTCD section 3B–1).

7. Cost Estimate: An engineer's cost estimate shall be required for all proposed traffic control devices. The estimates shall be provided in conjunction with the Traffic Control Devices Submittal Data Form. (See Section 5.2)

8. Inspection and acceptance:
8.1) Upon completion of the installation of the traffic control devices, the contractor shall call the Engineering Inspections Division for an inspection at (813) 847–8154.
8.2) The inspection shall be made by the Engineering Inspections Division within 48 hours (two working days) of the request.
8.3) An inspection report shall be made by the Engineering Inspections Division. Copies of the report shall be sent to the Engineer and the Developer.
8.4) No roadway shall be open to the Public until all traffic control devices have been inspected and accepted by Pasco County.

N

0 25 50 100

SIGNAGE LEGEND

- ST. NAME = Street Name Sign (2xD3)
- = Stop Sign (R1–1)
- = Warning Sign (W1–1 R or L) with W13–1
- = Regulatory Speed Sign (R2–1 20 MPH) with No Parking Sign (R8–3A) and supplemental plate (ANY STREET)
- = Dead End Sign (W14–1)
- = No Outlet (W14–2)
- = Dead End (W14–1A)
- = Wildlife Crossing Sign
- = Reflective Marker Sign (OM4)
- = Type III Barricade

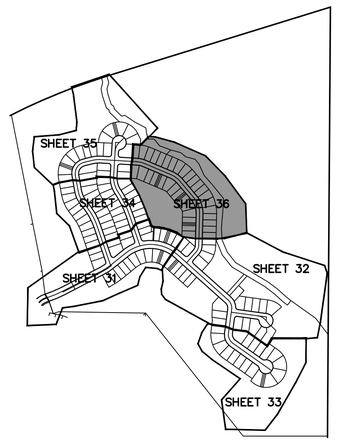

SHEET LOCATION MAP

PAUL E. SKIDMORE LICENSE NO. 39631 STATE OF FLORIDA PROFESSIONAL ENGINEER

JOB NO.	506-100F
EPN	213
DATE	10-1-2015
DESIGNED	
DRAWN	RAH
CHECKED	
APPROVED	PES

NO.	DATE	REVISIONS

DESIGNED FOR
ASTURIA COMMUNITY DEVELOPMENT DISTRICT
2005 PALENCIA CLUB DRIVE, ST. AUGUSTINE, FLORIDA 32092
PHONE: (904) 810-0500 - FAX: (904) 810-0525 - E-MAIL: sean.mariner@dwnd.com

PROJECT NAME: Asturia | PHASE 2

SHEET NAME: SIGNAGE AND PAVEMENT MARKING PLANS (6)

ENGINEER / SURVEYOR
FLORIDA DESIGN CONSULTANTS, INC.
— THINK IT. ACHIEVE IT. —
3030 STARKEY BOULEVARD, NEW PORT RICHEY, FLORIDA 34655
PHONE: (800) 532 - 1047 FAX: (727) 848 - 3648 WWW.FLDESIGN.COM C.A. NO. 7421
E-MAIL: pskismore@fldesign.com

PLAN SET DATE
October 7, 2015

SHEET 36 OF 52

©Copyright 2015 Florida Design Consultants, Inc. Drawings and concepts may not be used or reproduced without written permission.

K:\213\Proj Data\ConstDocs\Plans\Phase 2\213_ASTURIA–PH2–PSPM–6.dwg — Oct 20, 2015 @ 1:36pm — rhall

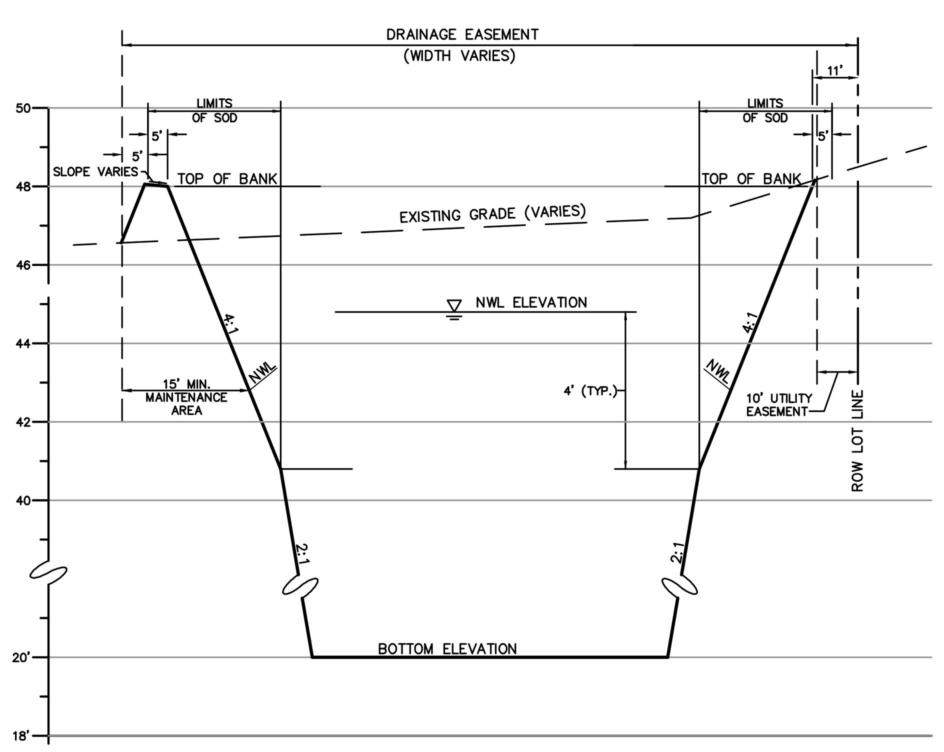

TYPICAL POND SECTION (TYP / ANY)

N.T.S.

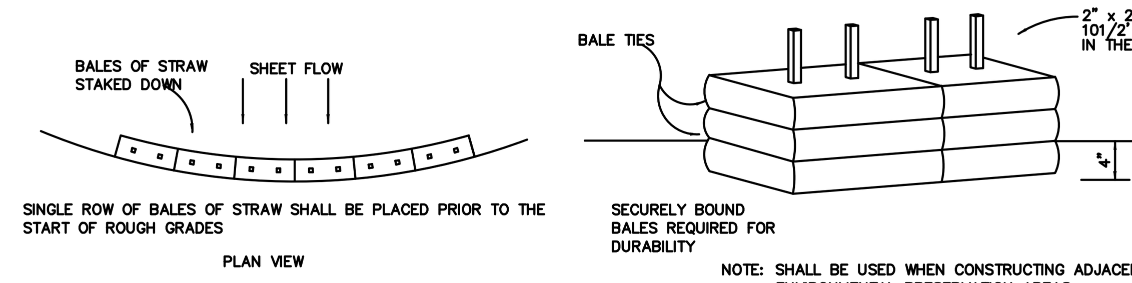

NOTE: SHALL BE USED WHEN CONSTRUCTING ADJACENT TO ANY ENVIRONMENTAL PRESERVATION AREAS.

TEMPORARY STRAW SEDIMENT BARRIER

N.T.S.

*

SOUTHWEST FLORIDA WATER MANAGEMENT DISTRICT SIGNAGE

"CONSERVATION BOUNDARY: NO CONSTRUCTION OR ACTIVITY DOWNSLOPE FROM THIS BOUNDARY WITHOUT PRIOR APPROVAL FROM THE SOUTHWEST FLORIDA WATER MANAGEMENT DISTRICT."

CONSERVATION SIGN

NOTES:
Minimum side yard setbacks may be reduced to 5 feet where there is a TND design or as otherwise approved by the County. Such setbacks (if reduced to 5 feet) shall comply with the following conditions:
(a) Prior to any construction on the lot, proper erosion and sedimentation controls shall be installed.
(b) Lots that back up to drainage-retention areas and/or wetland areas designed and permitted to receive discharge shall be "Type B" or Type C" graded A minimum fifteen (15) foot wide drainage and access easement shall be provided along all rear lot lines where there is a pipe or swale. Drainage and access easements shall extend to the road right-of-way at block ends. Side-yard cross-access easements shall be provided connecting the rear-yard easement to the front right-of-way.
(c) Lots graded as Type A," which back up to other lots, shall require the installation of gutters on the sides and backs connecting to roof leaders and discharging to the front of the lot. These lots do not require a drainage easement at the rear of the lots.
(d) Lots graded as "Type B" or "Type C," which back up to other lots, shall require that traffic-bearing grates be installed upon a Florida Department of Transportation (FDOT) inlet placed within each rear lot line easement. Culverts connecting rear-yard inlets to acceptable outfalls shall be installed and shall be reinforced concrete pipe with premium sealed joints designed to sustain an H-20 loading. A minimum 7.5 foot-wide drainage and access easement shall be provided along alt rear lot fines for a total of fifteen (15) feet. Drainage and access easements shall extend to the road right-of-way at block ends. Side-yard cross-access easements shall be provided connecting the rear-yard easement to the front right-of-way.
(e) Side-yard swales shall be sloped to create positive outfall to the front and/or rear of each lot with velocities no greater than allowable for grassed stabilization, as in the FDOT Drainage Manual.
(f) A maintenance entity, other than and acceptable to the County, shall be designated to provide perpetual maintenance to all drainage and access easements. The approved maintenance entity shall provide annual inspections of side- and rear-yard easements and drainage facilities to verify that no modifications have been made to the grading and ground cover and to inspect any inlets and pipes to verify that no flow restrictions exist. Any modification or flow restriction observed at any time shall be corrected. Additional inspections shall be performed if requested by an adjoining resident or the County. The maintenance entity shall have the right to file a lien to charge property owners for corrections or modifications and collect sufficient funds to perform required maintenance.
(g) Gutters and roof structures shall be installed so as to reduce direct discharge to the sideyard swales. (h) The engineer of record shall provide to Pasco County signed and sealed design calculations for each typical lot demonstrating compliance with Pasco County's drainage criteria. The typical site-grading plan shall identify elevations, grades, ground cover, allowable tolerances, and a quality-control plan addressing construction and post construction phases. In addition, the engineer of record shall inspect the lot upon completion of construction and complete the "as-built" certification, including the signature and sealing of the same, prior to the issuance of the Certificate of Occupancy (CO) or use of the structure associated with the lot.
(i) A minimum 5-foot-wide drainage/access easement shall be provided on all side lot lines for a total of 10-feet.
(j) No obstructions shall be permitted in the side yard easements. This includes, but is not limited to, air conditioning systems, water softeners, pumps, fences, etc. Conditions (b) through (g) above may be modified by the County Engineer or his designee upon request of the applicant and its demonstration that the intent of the conditions are achievable by other means or alternative standards.

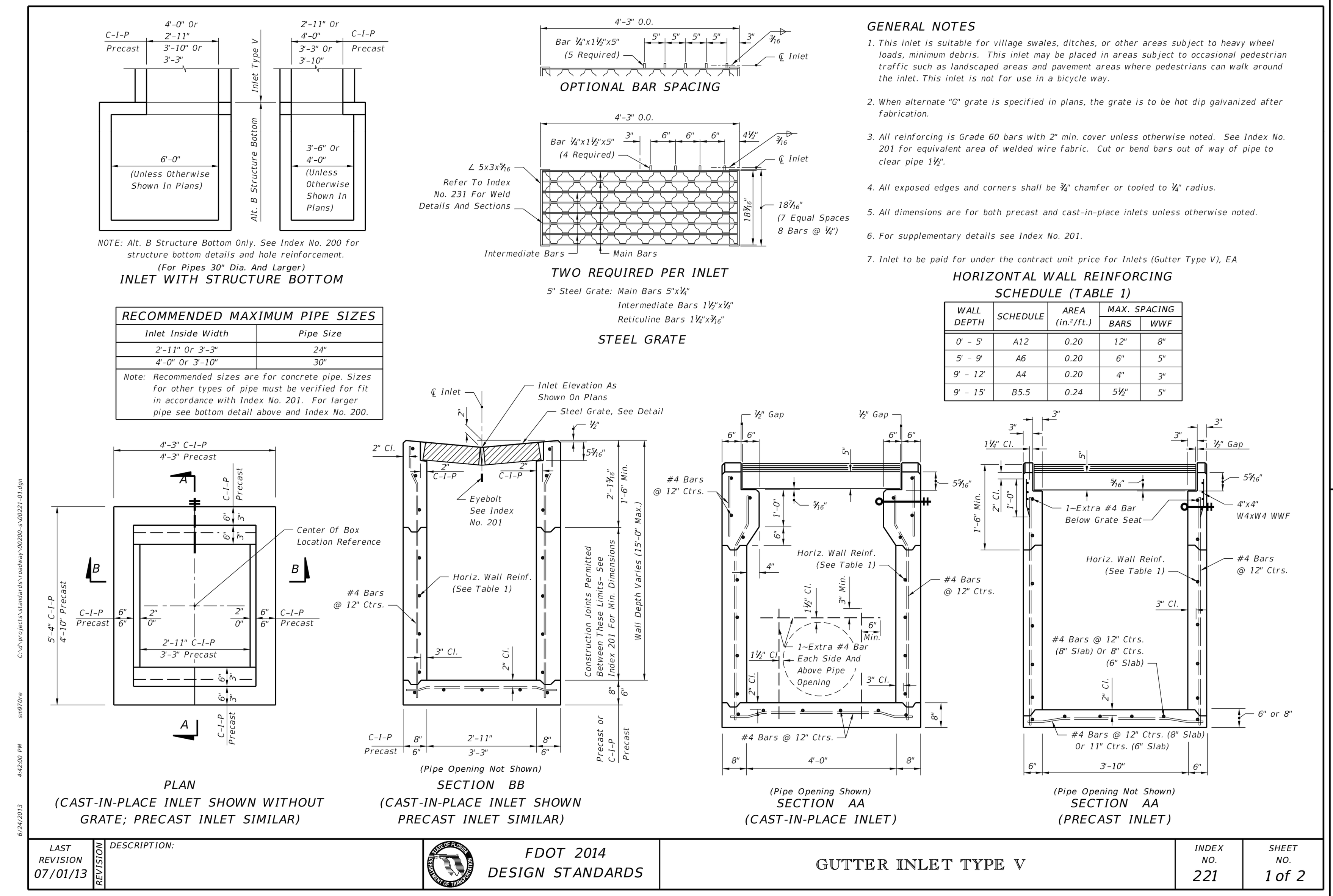

NOTE: Alt. B Structure Bottom Only. See Index No. 200 for structure bottom details and hole reinforcement. (For Pipes 30" Dia. And Larger)

RECOMMENDED MAXIMUM PIPE SIZES	
Inlet Inside Width	Pipe Size
2'-11" Or 3'-3"	24"
4'-0" Or 3'-10"	30"

Note: Recommended sizes are for concrete pipe. Sizes for other types of pipe must be verified for fit in accordance with Index No. 201. For larger pipe see bottom detail above and Index No. 200.

GENERAL NOTES
1. This inlet is suitable for village swales, ditches, or other areas subject to heavy wheel loads, minimum debris. This inlet may be placed in areas subject to occasional pedestrian traffic such as landscaped areas and pavement areas where pedestrians can walk around the inlet. This inlet is not for use in a bicycle way.
2. When alternate "G" grate is specified in plans, the grate is to be hot dip galvanized after fabrication.
3. All reinforcing is Grade 60 bars with 2" min. cover unless otherwise noted. See Index No. 201 for equivalent area of welded wire fabric. Cut or bend bars out of way of pipe to clear pipe 1½".
4. All exposed edges and corners shall be ¾" chamfer or tooled to ¼" radius.
5. All dimensions are for both precast and cast-in-place inlets unless otherwise noted.
6. For supplementary details see Index No. 201.
7. Inlet to be paid for under the contract unit price for Inlets (Gutter Type V), EA

HORIZONTAL WALL REINFORCING SCHEDULE (TABLE 1)

WALL DEPTH	SCHEDULE	AREA (in.²/ft.)	MAX. SPACING BARS	WWF
0' - 5'	A12	0.20	12"	8"
5' - 9'	A6	0.20	6"	5"
9' - 12'	A4	0.20	4"	3"
9' - 15'	B5.5	0.24	5½"	5"

LAST REVISION 07/01/13 | DESCRIPTION: | FDOT 2014 DESIGN STANDARDS | GUTTER INLET TYPE V | INDEX NO. 221 | SHEET NO. 1 of 2

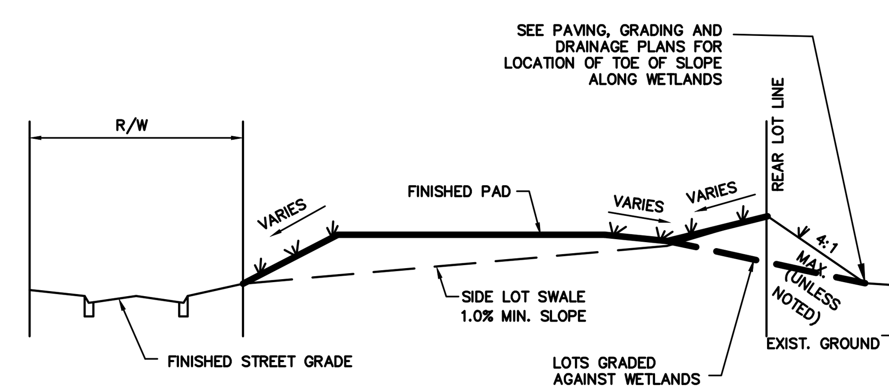

TYPICAL SECTION "A-A"

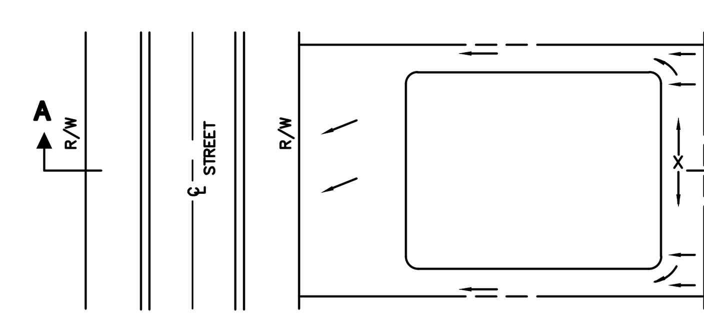

PLAN

TYPE "A" LOT GRADING

N.T.S.

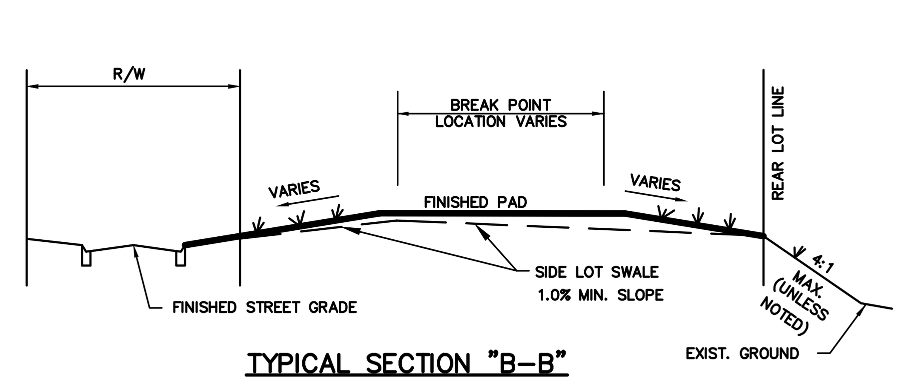

TYPICAL SECTION "B-B"

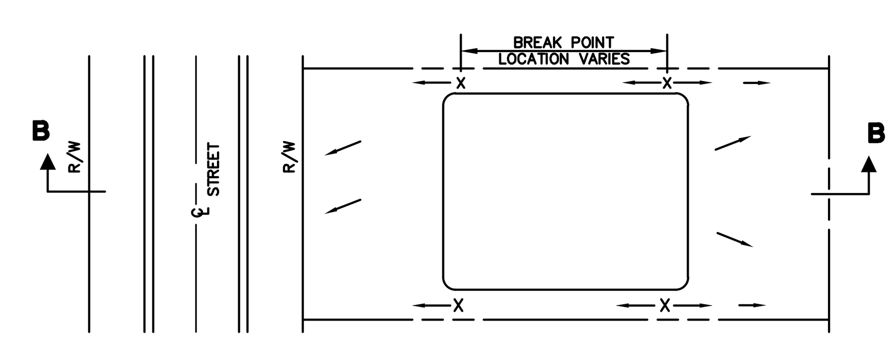

PLAN

TYPE "A" MODIFIED LOT GRADING

N.T.S.

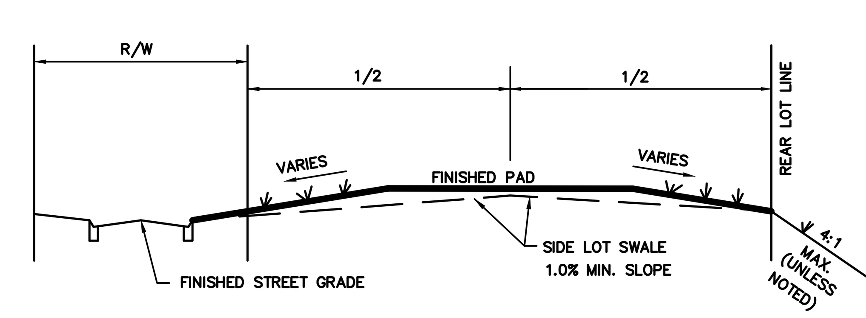

TYPICAL SECTION "B-B"

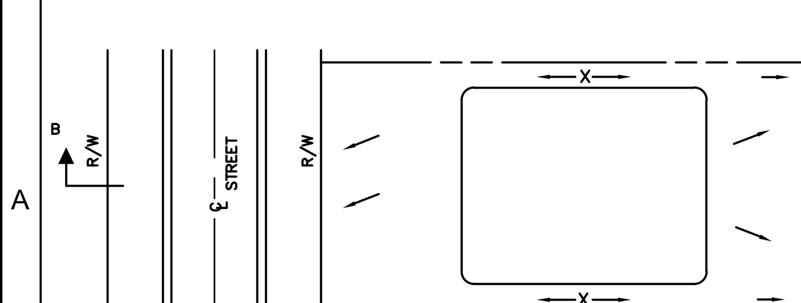

PLAN

TYPE "B" LOT GRADING

N.T.S.

HORIZONTAL WALL REINFORCING SCHEDULES (TABLE 4)

WALL DEPTH	SCHEDULE	AREA (in²/ft)	MAX. SPACING BARS	WWF
0'-5'	B5.5	0.24	5½"	5"
5'-7'	C6.5	0.37	6½"	6"
7'-15'	D4.5	0.53	4½"	4"

Recommended Maximum Pipe Size:
3'-0" Wall - 24" Pipe
6'-7" Wall - 1-60" Pipe
Or 2-24" Pipe (S=3'-5")

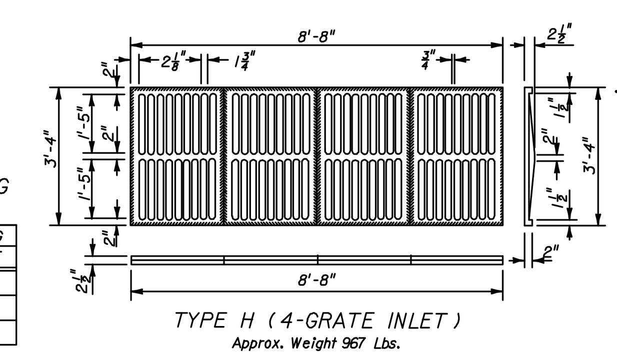

TYPE H (4-GRATE INLET)
Approx. Weight 967 Lbs.

CAST IRON GRATE

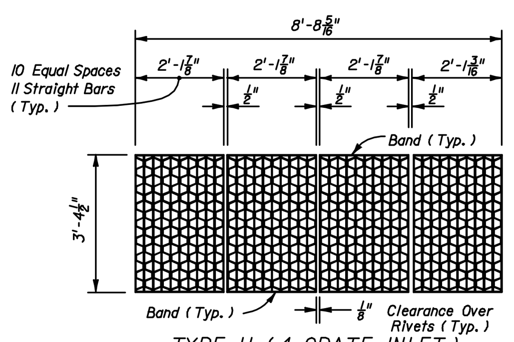

TYPE H (4-GRATE INLET)
Straight End-Bearing Bars 2" x ¼"
Reticuline Bars 1¼" x 3/16"
Banding Bars 2" x 3/16"
Approx. Total Weight 388 Lbs.

STEEL GRATE

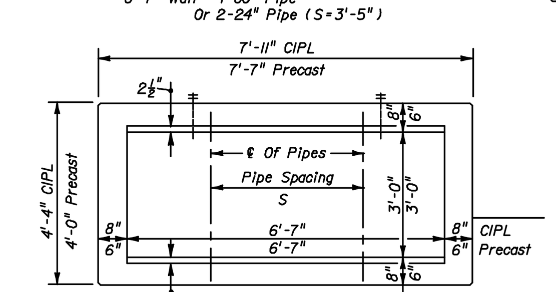

PLAN

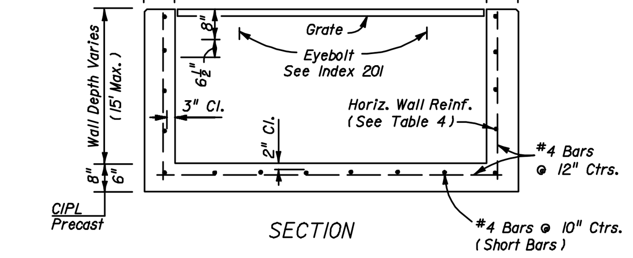

SECTION

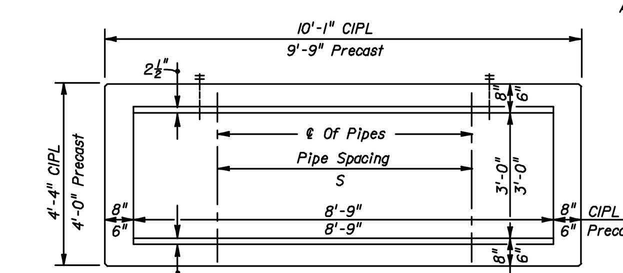

PLAN

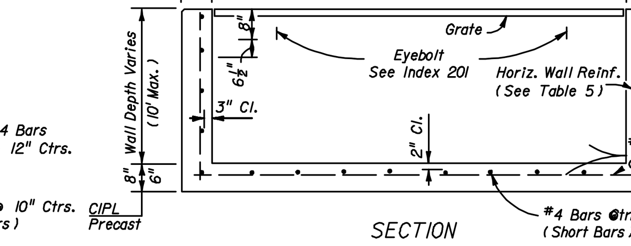

SECTION

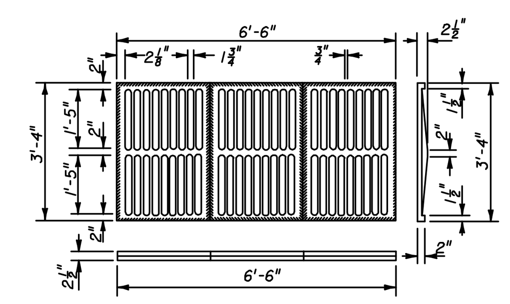

TYPE H (3-GRATE INLET)
Approx. Weight 725 Lbs.
CAST IRON GRATE

HORIZONTAL WALL REINFORCING SCHEDULES (TABLE 5)

WALL DEPTH	SCHEDULE	AREA (in²/ft)	MAX. SPACING BARS	WWF
0'-5'	C3.5	0.37	3½"	3"
5'-10'	D4.5	0.53	4½"	4"

TYPE H (4-GRATE INLET)
Recommended Maximum Pipe Size:
3'-0" Wall - 24" Pipe
8'-9" Wall - 1-78" Pipe
Or 2-30" Pipe (S=4'-3")

NOTE: Steel Grates Are Required On Inlets With Traversable Slots And On Inlets where Bicycle Traffic Is Anticipated.

TYPE "H" (2 & 3 - GRATE) INLET

F.D.O.T. INDEX #232 N.T.S.

TYPE "H" (4 - GRATE) INLET

F.D.O.T. INDEX #232 N.T.S.

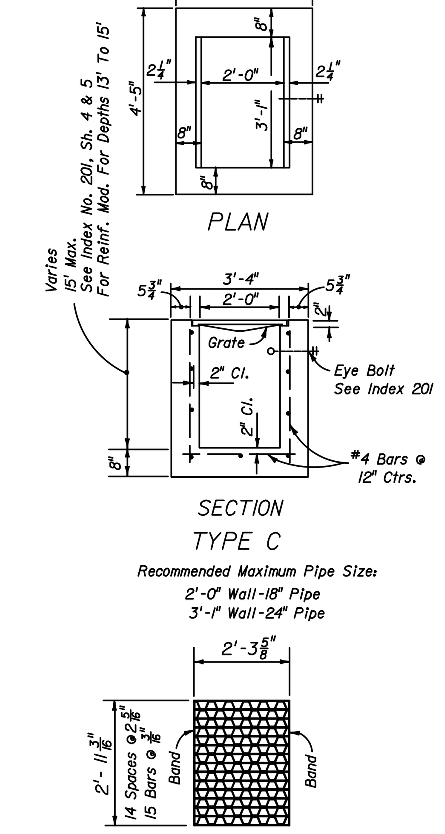

TYPE C
Recommended Maximum Pipe Size:
2'-0" Wall-18" Pipe
3'-1" Wall-24" Pipe

TYPE C
Straight Bars 2"x 3/16"
Reticuline Bars 1¼" x 3/16"
Bands 1½" x ¼"
Approx. Weight 100 Lbs.

TYPE "C" INLET

F.D.O.T. INDEX #232 N.T.S.

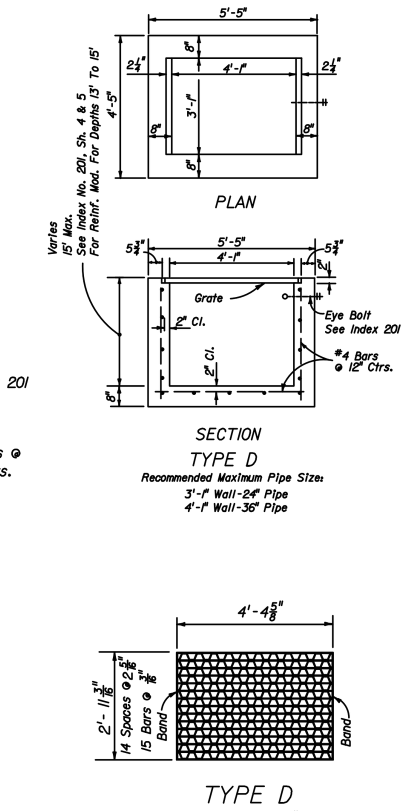

TYPE D
Recommended Maximum Pipe Size:
3'-1" Wall-24" Pipe
4'-1" Wall-36" Pipe

TYPE D
Straight Bars 2"x 3/16"
Reticuline Bars 1¼" x 3/16"
Bands 1½" x ¼"
Approx. Weight 180 Lbs.

TYPE "D" INLET

F.D.O.T. INDEX #232 N.T.S.

NOTICE: Steel Grates Are Required On Inlets With Traversable Slots And On Inlets where Bicycle Traffic Is Anticipated.

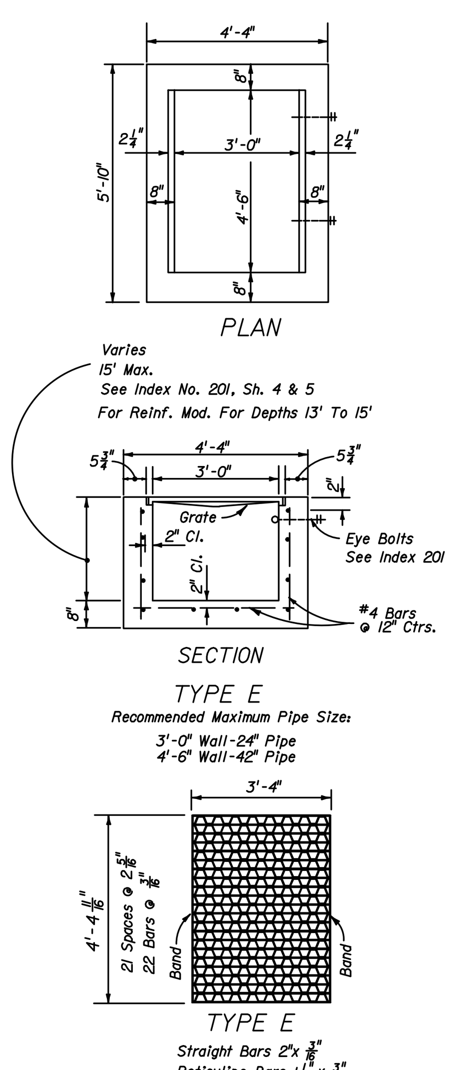

TYPE E
Recommended Maximum Pipe Size:
3'-0" Wall-24" Pipe
4'-6" Wall-42" Pipe

TYPE E
Straight Bars 2"x 3/16"
Reticuline Bars 1¼" x 3/16"
Bands 1½" x ¼"
Approx. Weight 215 Lbs.

TYPE "E" INLET

F.D.O.T. INDEX #232 N.T.S.

NOTE: TYPE "E" (MODIFIED) – ADJUST AS REQUIRED TO ACCEPT PIPE INSTALLATION AS INDICATED

GENERAL NOTES

1. These inlets are suitable for bicycle traffic and are to be used in ditches, medians and other areas subject to infrequent traffic loadings but are not to be placed in areas subject to any heavy wheel loads. These inlets may be placed in areas subject to occasional pedestrian traffic such as landscaped areas and pavement areas where pedestrians can walk around the inlet.
2. Inlets subject to minimal debris should be constructed without slots. Where debris is a problem inlets should be constructed with slots. Slotted inlets located within roadway clear zones and areas subject to bicycles and/or pedestrians shall have traversable slots. The traversable slot modification is not adaptable to inlet Type H. Slots may be constructed at either or both ends as shown on plans.
3. Steel grates are to be used on all inlets where bicycle traffic is anticipated. Steel grates are to be used on all inlets with traversable slots. Either cast iron or steel grates may be used on inlets without slots where bicycle traffic is not anticipated. Either cast iron or steel grates may be used on all inlets with non-traversable slots. Subject to the selection described above, when Alternate G grate is specified in the plans, either the steel grate, hot dipped galvanized after fabrication, or the cast iron grate may be used, unless the plans stipulate the particular type.
4. Recommended maximum pipe sizes shown are for concrete pipe. Size for other types of pipe must be checked for fit.
5. All exposed corners and edges of concrete are to be chamfered ¾".
6. Concrete inlet pavement to be used on inlets without slots and inlets with non-traversable slots only when called for in the plans; but required on all traversable slot inlets. Cost to be included in contract unit price for inlets. Quantities shown are for information only.
7. Traversable slots constructed in existing inlets shall be paid for as inlets partial. For conversion work and method of payment see 'TRAVERSABLE SLOT INLETS (PARTIAL) FOR EXISTING INLETS'.
8. Sodding to be used on all inlets not located in paved areas and paid for under contract concrete inlet pavement unit price for Sodding, SY.
9. For supplementary details see Index No. 201.
10. All reinforcing Grade 60 bars with 2" min. cover unless otherwise noted. Bars to be cut or bent for 1½" clearance around pipe opening. Provide one additional #4 bar above and at each side of pipe opening.

PAUL E. SKIDMORE LICENSE NO. 39631 STATE OF FLORIDA PROFESSIONAL ENGINEER

JOB NO.	EPN	DATE	DESIGNED	DRAWN	CHECKED	Q.C.
506-100F	213	10-1-2015	RAH	RAH	PES	

REVISIONS | NO. | DATE | APP'D BY

DESIGNED FOR

ASTURIA COMMUNITY DEVELOPMENT DISTRICT
605 PALENCIA CLUB DRIVE, ST. AUGUSTINE, FLORIDA 32095
PHONE: (904) 810-0500 - FAX: (904) 810-0525 - E-MAIL: sean.manson@hines.com

PROJECT NAME: Asturia — PHASE 2

SHEET NAME: PAVING, GRADING, AND DRAINAGE DETAILS (1)

ENGINEER / SURVEYOR

FLORIDA DESIGN CONSULTANTS, INC.
— THINK IT. ACHIEVE IT. —
3030 STARKEY BOULEVARD, NEW PORT RICHEY, FLORIDA 34655
PHONE: (800) 532 - 1047 FAX: (727) 848 - 3648 WWW.FLDESIGN.COM C.A. NO. 7421
E-MAIL: pskidmore@fldesign.com

PLAN SET DATE
October 7, 2015

©Copyright 2015 Florida Design Consultants, Inc. Drawings and concepts may not be used or reproduced without written permission.

K:\213\ProjData\ConstDocs\Plans\Phase 2\213_ASTURIA-PH2-PDTPA-1.dwg - Oct 20, 2015 @ 1:36pm - rhall

DIMENSIONS & QUANTITIES

D	X	A	B	C	E	F	G	H ■	H Single Pipe	H Double Pipe	H Triple Pipe	H Quad Pipe	N	GRATE SIZES Standard Weight Pipe	GRATE SIZES Extra Strong Pipe	CONCRETE (CY) Single Pipe	CONCRETE (CY) Double Pipe	CONCRETE (CY) Triple Pipe	CONCRETE (CY) Quad Pipe	SODDING (SY) Single Pipe	SODDING (SY) Double Pipe	SODDING (SY) Triple Pipe	SODDING (SY) Quad Pipe
15"	2'-7"	2.27'	4.09'	6.36'	4.03'	8'	1.22'	4.0'	4.63'	7.21'	9.79'	12.37'	1.19'			0.76	1.16	1.54	1.94	8	10	11	12
18"	2'-10"	2.36'	5.12'	7.48'	5.03'	9'	1.41'	4.0'	4.92'	7.75'	10.58'	13.42'	1.21'			0.85	1.28	1.71	2.17	9	10	12	13
24"	3'-5"	2.53'	7.18' △	9.71'	7.03' △	11'	1.73'	4.0'	5.50'	8.92'	12.33'	15.75'	1.25'			1.02	1.58	2.15	2.75	10	12	13	15
30"	4'-3"	2.70'	9.25'	11.95'	9.03' △	13'	2.00'	4.0'	6.08'	10.33'	14.58'	18.83'	1.29'	2W'	3"	1.23	1.98	2.74	3.50	12	14	15	17
36"	5'-1"	2.87'	11.31' ◇	14.18'	11.02' ◇	15'	2.24'	4.0'	6.67'	11.75'	16.83'	21.92'	1.33'	2W'	3"	1.40	2.38	3.33	4.24	13	15	17	20
42"	6'-0"	3.05'	13.37'	16.42'	13.02'	17'	2.45'	4.0'	7.25'	13.25'	19.25'	25.25'	1.38'	2W'	3W'	1.60	2.83	4.04	5.26	14	17	19	22
48"	6'-9"	3.22'	15.43'	18.65'	15.03'	19'	2.65'	4.0'	7.83'	14.58'	21.33'	28.08'	1.42'	2W'	3W'	1.81	3.26	4.70	6.14	15	18	21	24
54"	7'-8"	3.39'	17.49'	20.88'	17.03'	21'	2.83'	4.0'	8.42'	16.08'	23.75'	31.42'	1.46'	3"	4"	2.03	3.78	5.54	7.28	17	20	23	27
60"	8'-6"	3.56'	19.55'	23.11'	19.03'	23'	3.00'	4.0'	9.00'	17.50'	26.00'	34.50'	1.50'	3"	4"	2.28	4.36	6.43	8.50	18	22	25	29

△ 6:42' △ 6:25' Dimensions permitted to allow use of 8' standard pipe lengths.
◇ 10:40' ◇10:10' Dimensions permitted to allow use of 12' standard pipe lengths.
△ ◇ Concrete slab shall be deepened to form bridge across crown of pipe. See section below.
■ Values shown for estimating pipe quantities and are for information only.

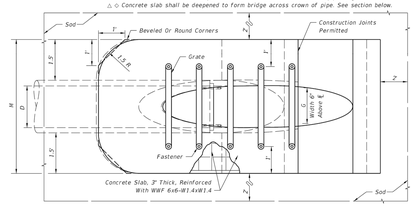

TOP VIEW-SINGLE PIPE

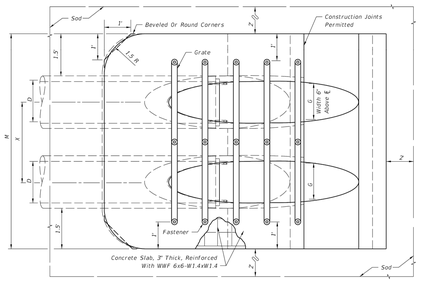

TOP VIEW-MULTIPLE PIPE

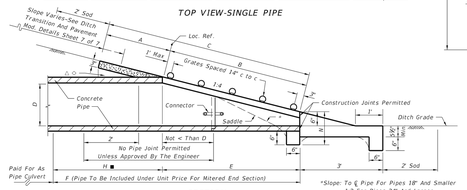

SECTION

*Slope: To ℄ Pipe For Pipes 18" And Smaller 1:2 For Pipes 24" And Larger.

Note: See Sheets 6 and 7 for details and general notes.

SINGLE AND MULTIPLE ROUND CONCRETE PIPE

LAST REVISION 07/01/02	DESCRIPTION:	FDOT 2015 DESIGN STANDARDS	SIDE DRAIN MITERED END SECTION	INDEX NO. 273	SHEET NO. 1 of 7

NOTE: PRECAST CONCRETE SHALL ATTAIN A MINIMUM COMPRESSION STRENGTH OF 4,000 P.S.I. AT 28 DAYS.

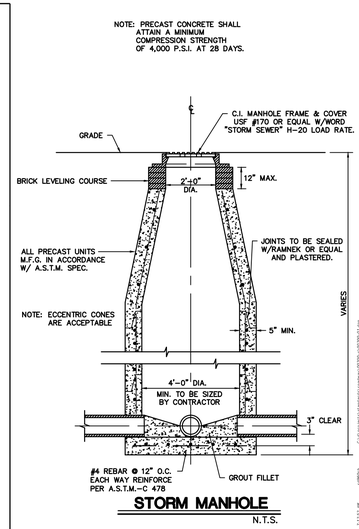

STORM MANHOLE
N.T.S.

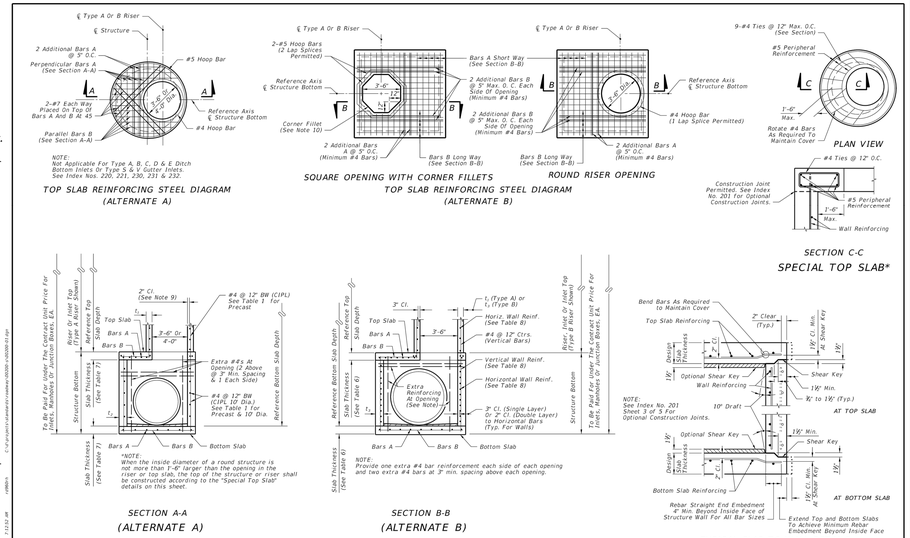

TOP SLAB REINFORCING STEEL DIAGRAM (ALTERNATE A)

SQUARE OPENING WITH CORNER FILLETS TOP SLAB REINFORCING STEEL DIAGRAM (ALTERNATE B)

ROUND RISER OPENING

SECTION A-A (ALTERNATE A)

SECTION B-B (ALTERNATE B)

TYPICAL SLAB TO WALL DETAILS FOR PRECAST STRUCTURES

LAST REVISION 01/01/10	DESCRIPTION:	FDOT DESIGN STANDARDS 2013	STRUCTURE BOTTOMS TYPE J AND P	INDEX NO. 200	SHEET NO. 1

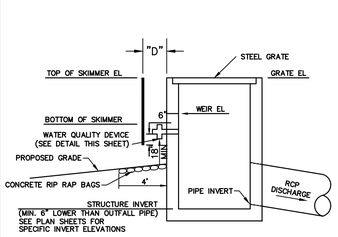

SECTION

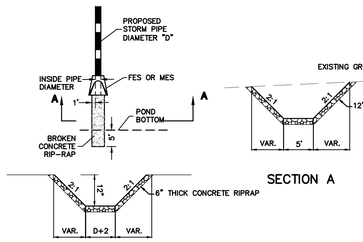

SECTION A

OUTFALL RIP RAP DETAIL
N.T.S.

SECTION A

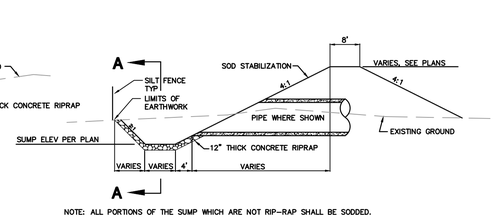

NOTE: ALL PORTIONS OF THE SUMP WHICH ARE NOT RIP-RAP SHALL BE SODDED.

TYPICAL OUTFALL SUMP DETAIL
N.T.S.

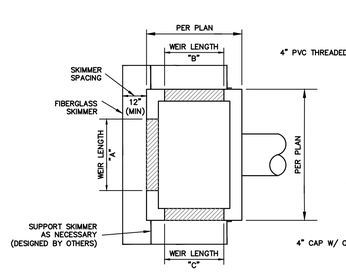

PLAN

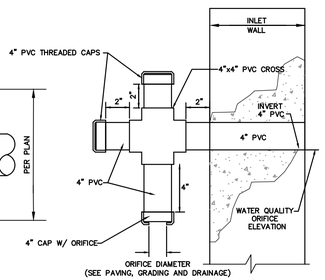

NOTE: PIPE & FITTINGS TO BE SCH. 40 PVC

TYPICAL DROP STRUCTURE WATER QUALITY ORIFICE DETAIL

DROP STRUCTURE WITH BLEED-DOWN ORIFICE DETAIL
N.T.S.

Control Structure Table

Str #	Structure Type	Dim. A (in.)	Dim. B (in.)	Dim. C (in.)	Total Weir length (in)
DS-3490-A	D	18	18	18	54
DS-3500-B	H-2 GRATE	72	36	36	144
DS-3500-D	D	48	N/A	N/A	48
DS-3500-E	D	48	12	12	72
DS-3510-C	D	18	18	18	54
DS-3740-C	H-2 GRATE	72	21	21	114
DS-3750-A	H-2 GRATE	72	27	27	126
DS-3510-A	D	20	20	20	60
DS-3510-B	D	48	18	18	84
DS-3400-A	E	48	9	9	66
DS-J-A	D	24	N/A	N/A	24
DS-H-A	H-2 GRATE	60	8	8	76

ELEVATIONS ARE BASED ON NAVD1988 DATUM

PAUL E. SKIDMORE LICENSE NO. 39631 STATE OF FLORIDA PROFESSIONAL ENGINEER

SCH. NO.	EPN	DATE	DRAWN	CHECKED	QUAL.
506-100F	213	10-1-2015	RAH	RAH	PES

NO.	DATE	REVISIONS	APPR. BY

DESIGNED FOR: ASTURIA COMMUNITY DEVELOPMENT DISTRICT
6051 PALENCIA CLUB DRIVE, ST. AUGUSTINE, FLORIDA 32095
PHONE: (904) 810-0500 - FAX: (904) 810-0525 - E-MAIL: sean.mariano@lennar.com

PROJECT NAME: Asturia

SHEET NAME: PAVING, GRADING, AND DRAINAGE DETAILS (2)

PHASE 2

ENGINEER / SURVEYOR
FLORIDA DESIGN CONSULTANTS, INC.
THINK IT. ACHIEVE IT.
3030 STARKEY BOULEVARD, NEW PORT RICHEY, FLORIDA 34655
PHONE: (800) 532 - 1047 FAX: (727) 848 - 3648 WWW.FLDESIGN.COM C.A. NO. 7421
E-MAIL: pskidmore@fldesign.com

PLAN SET DATE: October 7, 2015

SHEET 38 OF 52

©Copyright 2015 Florida Design Consultants, Inc. Drawings and concepts may not be used or reproduced without written permission.

K:\213\ProData\CivilDocs\Plans\Phase 2\213_ASTURIA-PH2-ROTPA-2.dwg - Oct 20, 2015 @ 1:36pm - rhall

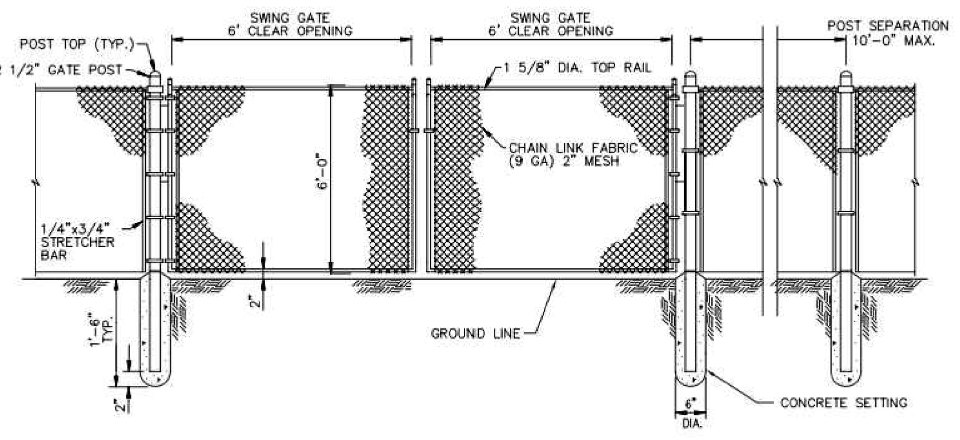

MATERIALS	
ITEM	DESCRIPTION
TYPE	CHAIN LINK
HEIGHT	4', 6', 8' – AS SPECIFIED BY COUNTY
FABRIC	9 GAUGE
POST	2-1/2" DIA. – .085 WALL THICKNESS (MINIMUM)
TOP RAILS	1-5/8" DIA. – .080 WALL THICKNESS (MINIMUM)
GATE	4' x 6' SWING TYPE W/ 2" DIA. – .085 WALL
	THICKNESS (MINIMUM)
	FRAMEWORK (LOCATED AS INDICATED ON METER
	SPEC. SHEET)
LATCH	FORK TYPE – PADLOCK COMPATIBLE

CREATED 02/24/03
REVISED

FENCE SPECIFICATIONS

PROVIDED FOR INFORMATIONAL PURPOSES ONLY. NO MODIFICATIONS WITHOUT WRITTEN PCU APPROVAL

PASCO COUNTY UTILITIES — DETAIL 04

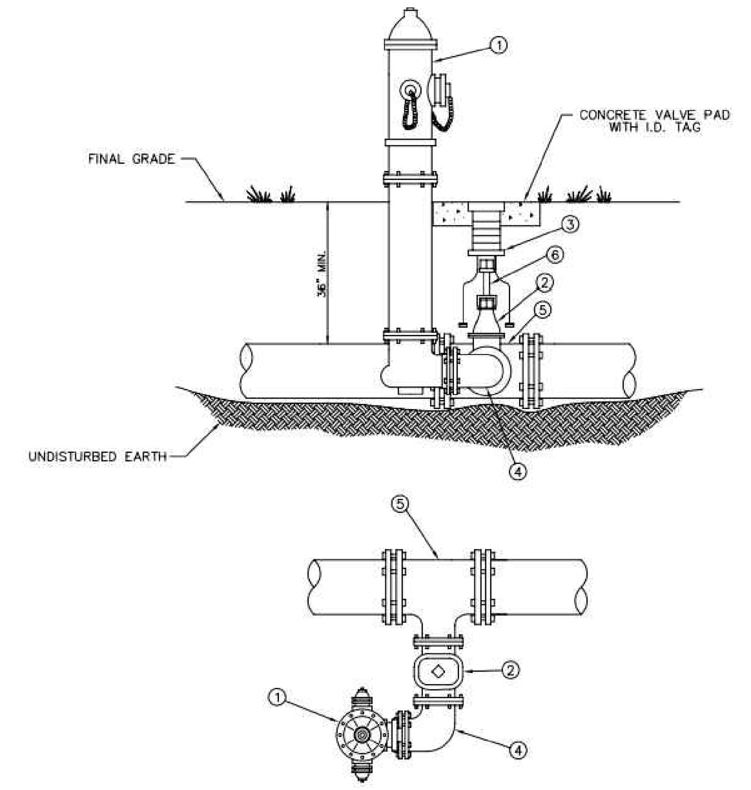

MATERIALS		
ITEM	QUANT.	DESCRIPTION
1	1	HYDRANT, FIRE (5 1/4" VALVE MIN.), PAINTED YELLOW
2	1	6" VALVE, GATE, MJ RESILIENT WEDGE
3	1	BOX, VALVE SLIP TYPE
4	1	6" BEND, ANCHORING, D.I.
5	1	TEE, ANCHORING, MJ
6	*	VALVE EXTENSION ROD, AS NECESSARY (3' MAX. BELOW GRADE)

CREATED 02/24/03
REVISED

FIRE HYDRANT PARALLEL TO THE MAIN

PROVIDED FOR INFORMATIONAL PURPOSES ONLY. NO MODIFICATIONS WITHOUT WRITTEN PCU APPROVAL

PASCO COUNTY UTILITIES — DETAIL 25

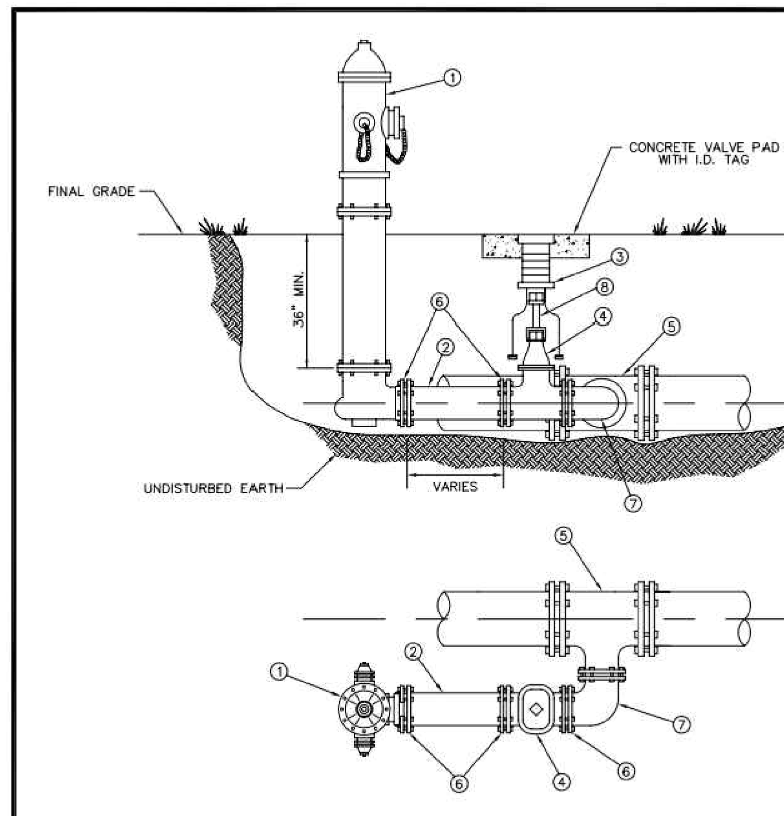

MATERIALS		
ITEM	QUANT.	DESCRIPTION
1	1	HYDRANT, FIRE (5 1/4" VALVE MIN.), PAINTED YELLOW
2	*	6" PIPE, P.V.C. (DR-18)
3	1	BOX, VALVE SLIP TYPE
4	1	6" VALVE, GATE, M.J. RESILIENT WEDGE
5	1	TEE, ANCHORING, M.J.
6	*	6" RESTRAINER GLAND (MEGALUG)
7	1	BEND, ANCHORING, D.I.
8	*	VALVE EXTENSION ROD, AS NECESSARY (3' MAX. BELOW GRADE)

CREATED 02/24/03
REVISED

FIRE HYDRANT PARALLEL TO THE MAIN

PROVIDED FOR INFORMATIONAL PURPOSES ONLY. NO MODIFICATIONS WITHOUT WRITTEN PCU APPROVAL

PASCO COUNTY UTILITIES — DETAIL 26

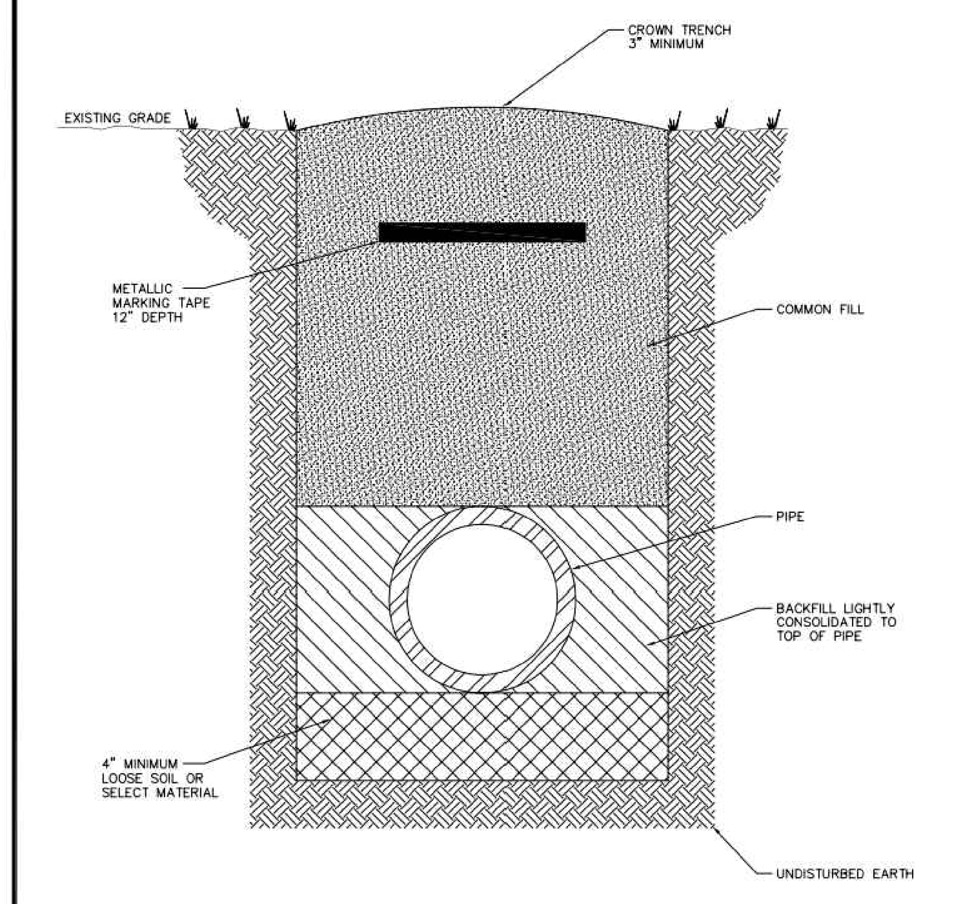

NOTES: –LOOSE SOIL OR SELECT MATERIAL IS NATIVE SOIL EXCAVATED FROM THE TRENCH FREE OF ROCKS AND FOREIGN MATERIAL.
–COMMON FILL TO BE PLACED AND COMPACTED IN 12" LAYERS. ROLLING EQUIPMENT SHALL NOT BE USED FOR COMPACTION UNTIL A MINIMUM OF 18" OF COMMON FILL HAS BEEN PLACED AND COMPACTED OVER THE PIPE. THREE FEET OF FILL SHALL BE PLACED BEFORE A HYDROHAMMER MAY BE USED FOR COMPACTION.

NTS

CREATED 02/24/03
REVISED

PIPE LAYING CONDITIONS STANDARD UNPAVED AREAS

PROVIDED FOR INFORMATIONAL PURPOSES ONLY. NO MODIFICATIONS WITHOUT WRITTEN PCU APPROVAL

PASCO COUNTY UTILITIES — DETAIL 35

PIPE RESTRAINT LENGTHS IN FEET COMMON FITTINGS

WATER MAINS - TEST PRESSURE 150 PSI						
		FITTING TYPE				
		11-1/4°	22-1/2°	45°	90°	DEAD END
PIPE SIZE	4"	2'	4'	8'	20'	45'
	6"	3'	6'	12'	28'	63'
	8"	4'	7'	15'	36'	82'
	10"	4'	9'	18'	43'	98'
	12"	5'	10'	21'	50'	116'
	16"	6'	13'	26'	63'	148'
	20"	7'	15'	31'	76'	179'
	24"	9'	17'	36'	87'	208'

FORCE MAINS - TEST PRESSURE 100 PSI						
		FITTING TYPE				
		11-1/4°	22-1/2°	45°	90°	DEAD END
PIPE SIZE	4"	1'	3'	6'	13'	30'
	6"	2'	4'	8'	19'	42'
	8"	2'	5'	10'	24'	55'
	10"	3'	6'	12'	29'	66'
	12"	3'	7'	14'	34'	77'
	16"	4'	8'	18'	42'	99'
	20"	5'	10'	21'	50'	119'
	24"	6'	11'	24'	58'	139'

RESTRAINT LENGTHS ARE MEASURED FROM THE CENTER LINE OF THE FITTING ALONG THE PIPE IN BOTH DIRECTIONS (EXCEPT DEAD ENDS).

CREATED 02/24/03
REVISED

RESTRAINED JOINT TABLE COMMON FITTINGS

PROVIDED FOR INFORMATIONAL PURPOSES ONLY. NO MODIFICATIONS WITHOUT WRITTEN PCU APPROVAL

PASCO COUNTY UTILITIES — DETAIL 31

PIPE RESTRAINT LENGTHS IN FEET TEES (BRANCH SIDE)

WATER MAINS - TEST PRESSURE 150 PSI										
		BRANCH SIZE								
		3"	4"	6"	8"	10"	12"	16"	20"	24"
RUN SIZE	3"	6'	14'	30'	—	—	—	—	—	—
	4"	2'	11'	28'	44'	—	—	—	—	—
	6"	1'	2'	22'	40'	52'	—	—	—	—
	8"	1'	1'	16'	35'	48'	62'	—	—	—
	10"	1'	1'	10'	30'	44'	58'	83'	—	—
	12"	1'	1'	3'	25'	40'	55'	80'	103'	—
	16"	1'	1'	1'	14'	31'	48'	75'	98'	119'
	20"	1'	1'	1'	2'	22'	40'	69'	94'	116'
	24"	1'	1'	1'	1'	11'	31'	63'	89'	111'

RESTRAINT LENGTHS ARE MEASURED FROM THE CENTER LINE OF THE TEE ALONG THE BRANCH FOR THE DISTANCE INDICATED. A MINIMUM OF 5 FEET OF RESTRAINED PIPE MUST BE INSTALLED ON BOTH RUNS OF THE TEE. MEGALUG TYPE RESTRAINERS ARE REQUIRED ON ALL JOINTS.

CREATED 02/24/03
REVISED

RESTRAINED JOINT TABLE TEES (BRANCH SIDE)

PROVIDED FOR INFORMATIONAL PURPOSES ONLY. NO MODIFICATIONS WITHOUT WRITTEN PCU APPROVAL

PASCO COUNTY UTILITIES — DETAIL 32

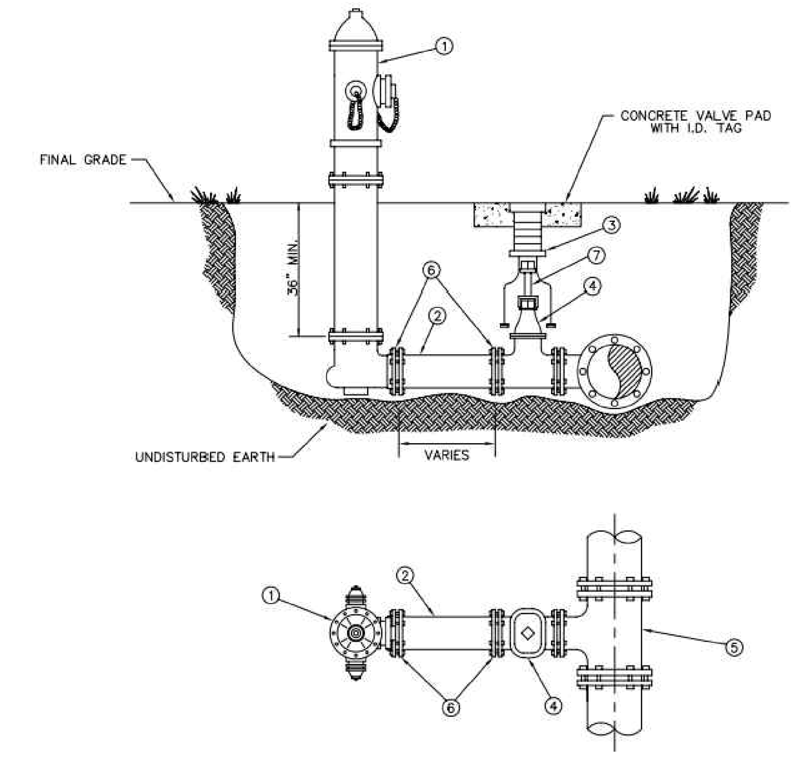

MATERIALS		
ITEM	QUANT.	DESCRIPTION
1	1	HYDRANT, FIRE (5 1/4" VALVE MIN.), PAINTED YELLOW
2	*	6" PIPE, P.V.C. (DR-18)
3	1	BOX, VALVE SLIP TYPE
4	1	6" VALVE, GATE, M.J. RESILIENT WEDGE
5	1	TEE, ANCHORING, M.J.
6	*	6" RESTRAINER GLAND (MEGALUG)
7	*	VALVE EXTENSION ROD, AS NECESSARY (3' MAX. BELOW GRADE)

CREATED 02/24/03
REVISED

FIRE HYDRANT PERPENDICULAR TO THE MAIN

PROVIDED FOR INFORMATIONAL PURPOSES ONLY. NO MODIFICATIONS WITHOUT WRITTEN PCU APPROVAL

PASCO COUNTY UTILITIES — DETAIL 27

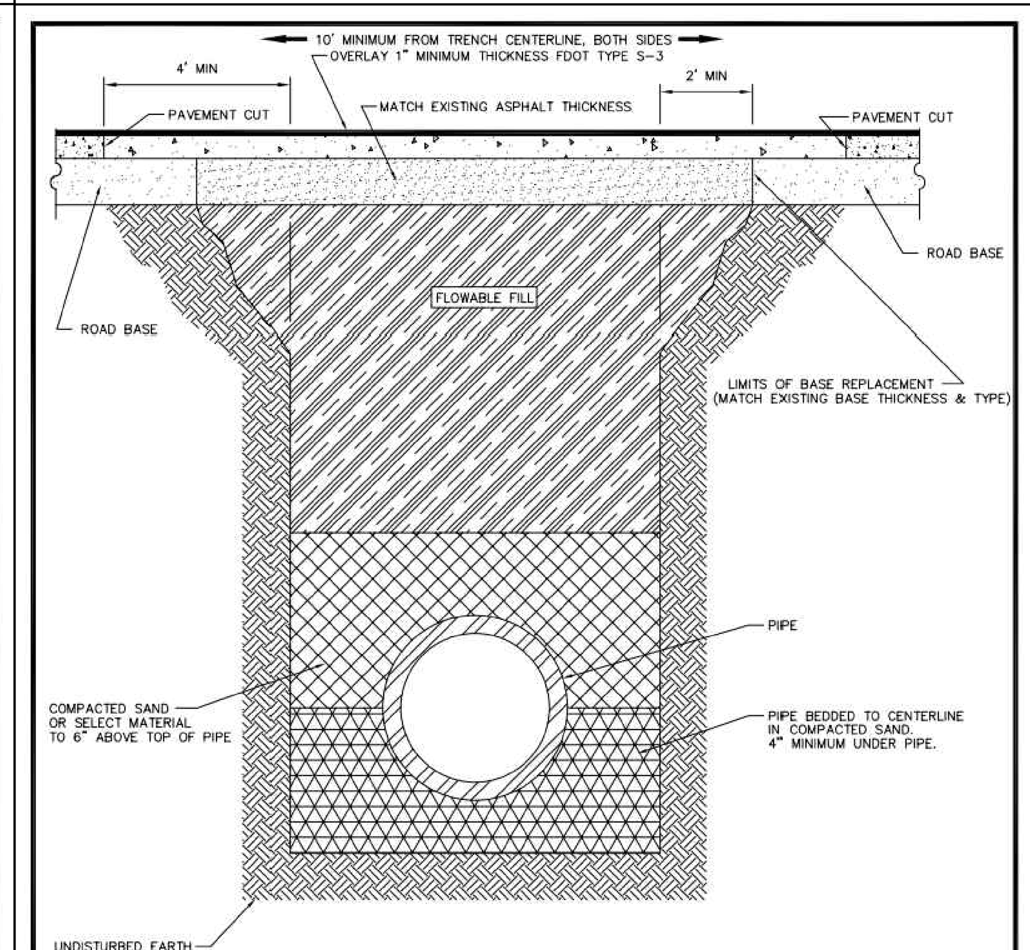

NOTE: –SELECT MATERIAL IS NATIVE SOIL EXCAVATED FROM THE TRENCH FREE OF ROCKS AND FOREIGN MATERIAL.
–COMPACTION TO TOP OF PILE IS TO BE APPROXIMATELY 90% STANDARD PROCTOR, AASHTO T-99.
–EXISTING CONCRETE/ASPHALT PAVEMENT SURFACE AND BASE TO BE CUT SQUARE WITH CONCRETE SAW.

NTS

CREATED 03/06/03
REVISED

PIPE LAYING CONDITIONS FLOWABLE FILL BACKFILL STANDARD EXISTING PAVED AREAS & ROADWAYS

PROVIDED FOR INFORMATIONAL PURPOSES ONLY. NO MODIFICATIONS WITHOUT WRITTEN PCU APPROVAL

PASCO COUNTY UTILITIES — DETAIL 36

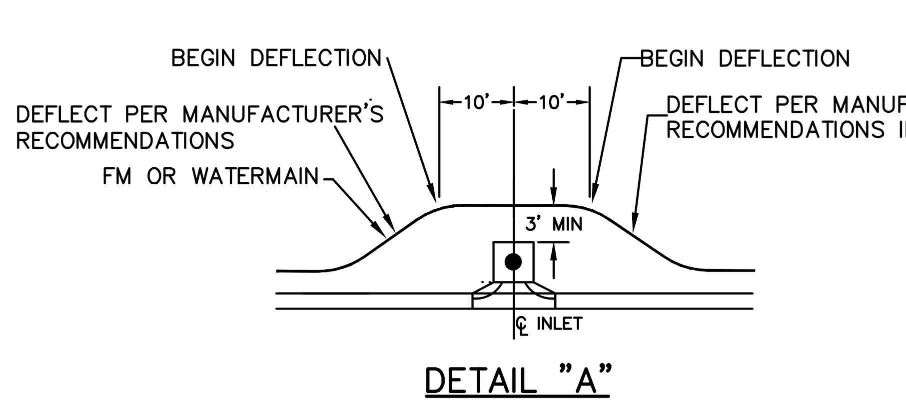

DETAIL "A"

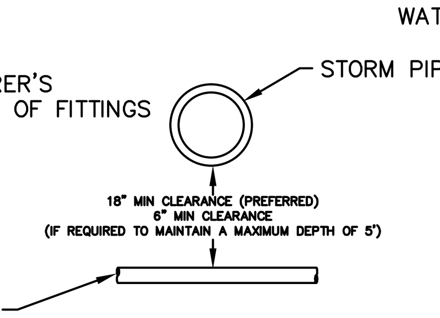

DETAIL "B"

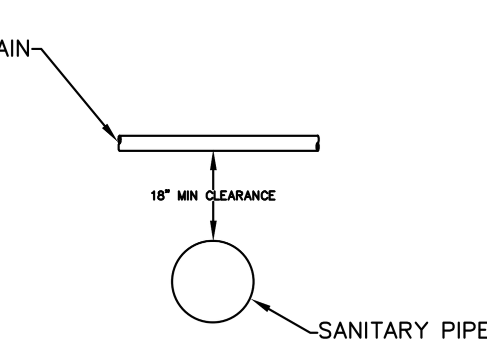

DETAIL "C"

POTABLE WATER/SANITARY SEWER CLEARANCE REQUIREMENTS

Vertical Clearance at Crossings:

Gravity sewers or force mains crossing under water mains shall be laid to provide a minimum vertical distance of 18 inches between the invert of the upper pipe and the crown of the lower pipe. The crossing shall be arranged so that the sewer joints and water joints will be equidistant from the point of crossing with no less than 10 feet between any two joints. Where the minimum 18-in. separation cannot be maintained, one of the following methods of protection shall be utilized:

a. the sewer shall be encased in concrete for 20 feet centered on the crossing (10-ft. linear separation between joints);
b. the sewer shall be installed as D.I.P. for 20 feet centered on the crossing (10-ft. linear separation between joints);
c. the sewer shall be designed and constructed to the same specifications as water pipe, and shall be pressure tested at 150 psi to assure water tightness prior to backfilling; or
d. either the water main or the sewer line may be encased in a watertight carrier pipe which extends 10 feet on both sides of the crossing, measured perpendicular to the water main. The carrier pipe shall be of materials approved by the Department for use in water main construction.

One of the above descibed methods shall also be utilized when there is no alternative to sewers crossing over water mains. In such instances, adequate structural support shall be provided for the sewer to maintain line and grade.

Horizontal Separation Between Parallel Lines:

Gravity sewers or force mains shall be installed at least 10 feet horizontally from any existing or proposed water main. The distance shall be measured edge to edge. In cases where it is not practical to maintain a 10-ft. separation, the water main shall be installed in a separate trench or on an undisturbed earth shelf located on one side of the sewer and at an elevation so that the bottom of the water main is at least 18 inches above the top of the sewer, and the water and sewer joints shall be staggered.

If it is impossible to obtain proper horizontal and vertical separation as described above, both the water main and sewer must be constructed of slip-on or mechanical joint pipe complying with public water supply design standards of the Florida Department of Environmental Protection and be pressure tested to 150 psi to assure watertightness before backfilling.

POTABLE WATER/STORM SEWER CLEARANCE REQUIREMENTS

PARALLEL INSTALLATION

Water mains shall be laid at least 10 feet horizontally from any existing or proposed storm sewer. The distance shall be measured edge to edge. In cases where it is not practical to maintain a 10-ft. separation the water main shall be installed in a separate trench or on an undisturbed earth shelf located on one side of the storm sewer and at an elevation so that the bottom of the water main is at least 18 inches above the top of the storm sewer.

CROSSINGS

Water mains crossing storm sewers shall be laid to provide a minimum vertical distance of 18 inches between the outside of the water main and the outside of the storm sewer. This shall be the case where the water main is either above or below the storm sewer. At crossings, one full length of water pipe shall be located so both joints will be as far from the storm as possible. Special structural support for the water and storm sewer pipes may be required.

STORM SEWER MANHOLES

No water pipe shall pass through or come in contact with any part of a storm sewer manhole.

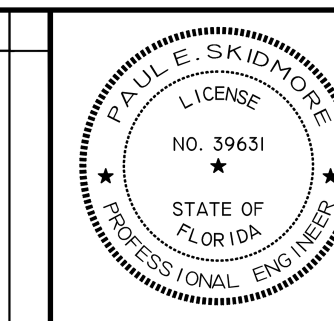

JOB NO. 506-100F
EPN 213
DATE 10-1-2015
DESIGNED RAH DRAWN RAH
CHECKED PES Q.C.

NO.	DATE	REVISIONS	APP'D BY

DESIGNED FOR
ASTURIA COMMUNITY DEVELOPMENT DISTRICT
605 PALENCIA CLUB DRIVE, ST. AUGUSTINE, FLORIDA 32095
PHONE: (904) 810-0500 - FAX: (904) 810-0525 - E-MAIL: sean.manson@hines.com

PROJECT NAME
Asturia
PHASE 2

SHEET NAME
UTILITY DETAILS (1)

ENGINEER / SURVEYOR
FLORIDA DESIGN CONSULTANTS, INC.
THINK IT. ACHIEVE IT.
3030 STARKEY BOULEVARD, NEW PORT RICHEY, FLORIDA 34655
PHONE: (800) 532 - 1047 FAX: (727) 848 - 3648 WWW.FLDESIGN.COM C.A. NO. 7421
E-MAIL: pskidmore@fldesign.com

PLAN SET DATE
October 7, 2015

©Copyright 2015 Florida Design Consultants, Inc. Drawings and concepts may not be used or reproduced without written permission.

K:\213\ProjData\ConstDocs\Plans\Phase 2\213_ASTURIA-PH2-PDTUT-1.dwg – Oct 20, 2015 @ 1:36pm – rhall

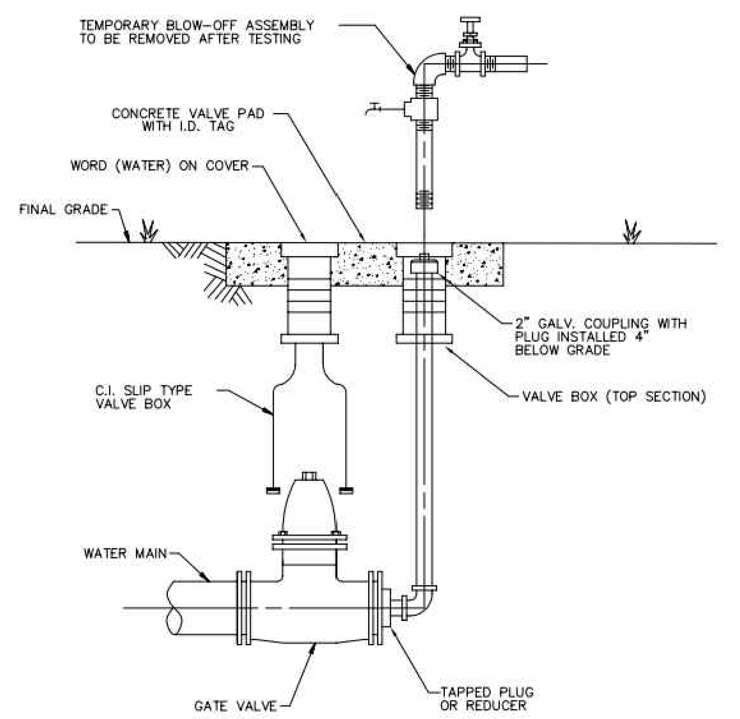

NOTES:

- MECHANICAL JOINTS/UNDERGROUND PIPING SHALL BE RESTRAINED AS SPECIFIED IN JOINT RESTRAINT TABLE (DETAIL 46)
- VALVE EXTENSION ROD SHALL BE UTILIZED, AS NECESSARY, SO THAT VALVE OPERATING NUT IS A MAXIMUM OF 3' BELOW GRADE.

CREATED 02/24/03 REVISED	PERMANENT BLOW-OFF DETAIL	PROVIDED FOR INFORMATIONAL PURPOSES ONLY. NO MODIFICATIONS WITHOUT WRITTEN PCU APPROVAL
	PASCO COUNTY UTILITIES	DETAIL 28

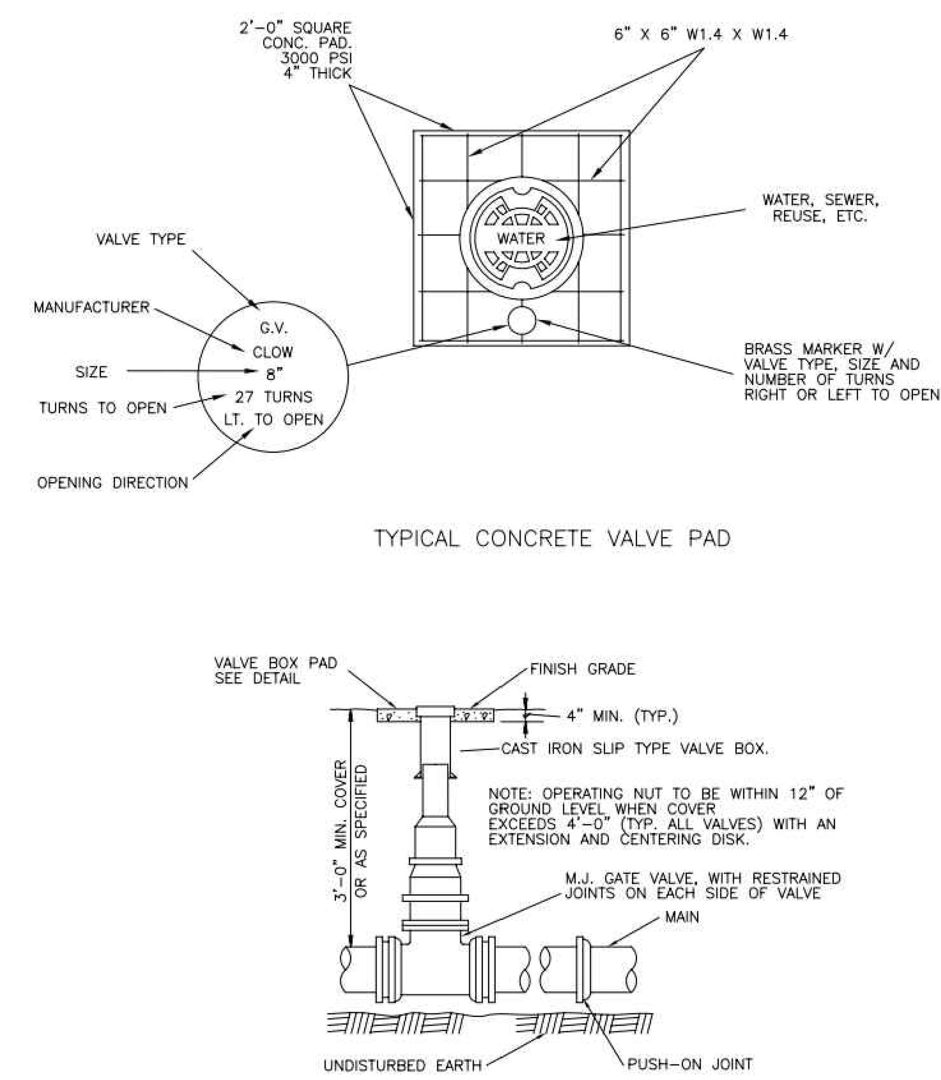

CREATED 02/24/03 REVISED	VALVE BOX DETAIL SLIP TYPE	PROVIDED FOR INFORMATIONAL PURPOSES ONLY. NO MODIFICATIONS WITHOUT WRITTEN PCU APPROVAL
	PASCO COUNTY UTILITIES	DETAIL 30

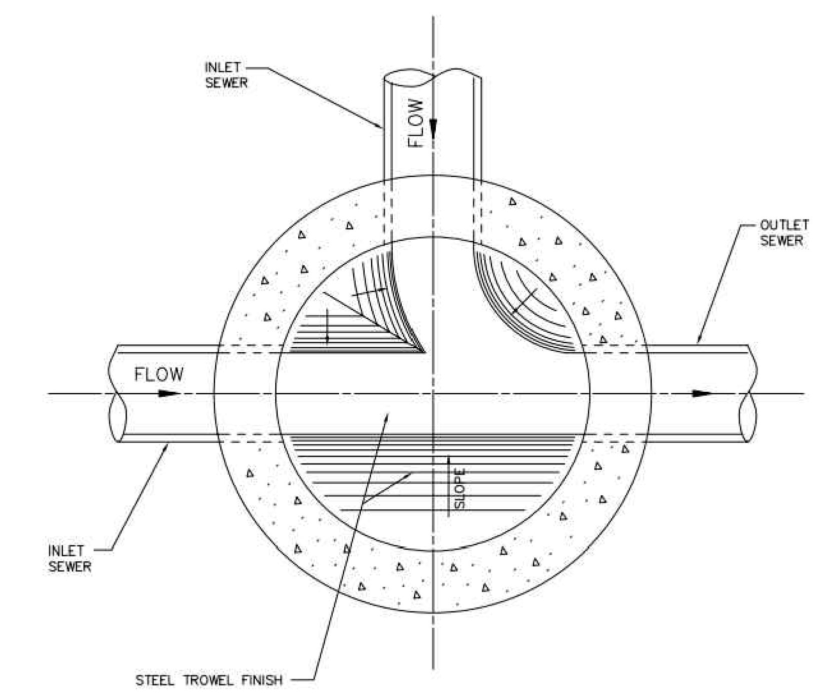

CREATED 02/24/03 REVISED	STANDARD MANHOLE (BENCH AND INVERTS)	PROVIDED FOR INFORMATIONAL PURPOSES ONLY. NO MODIFICATIONS WITHOUT WRITTEN PCU APPROVAL
	PASCO COUNTY UTILITIES	DETAIL 39

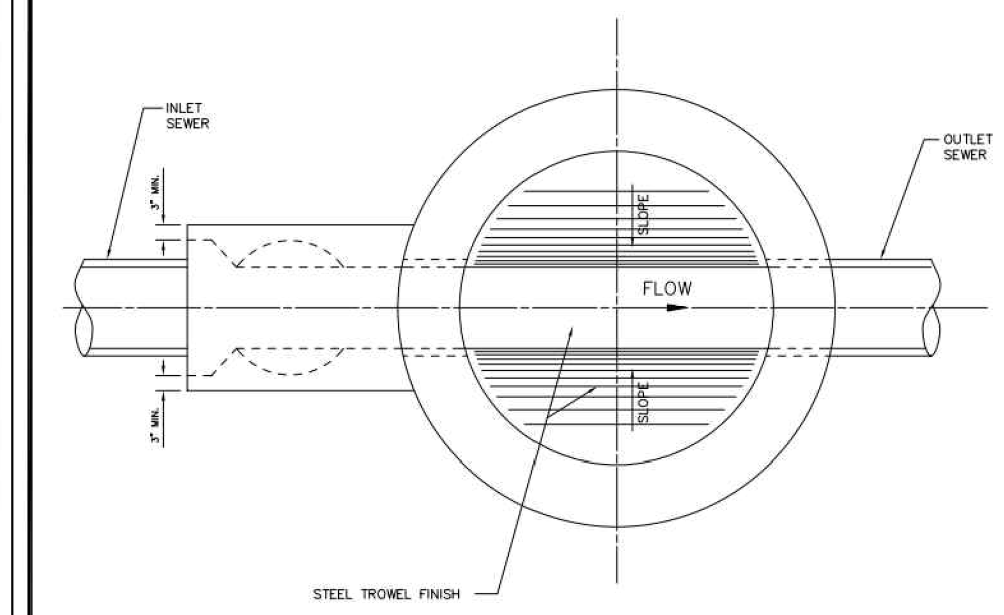

NOTE:
DROP MANHOLE TO BE USED WHEN THE DIFFERENCE BETWEEN INVERTS IS 2' OR MORE.

CREATED 02/24/03 REVISED	DROP MANHOLE (BENCH AND INVERTS)	PROVIDED FOR INFORMATIONAL PURPOSES ONLY. NO MODIFICATIONS WITHOUT WRITTEN PCU APPROVAL
	PASCO COUNTY UTILITIES	DETAIL 40

NOTE:
PRECAST CONCRETE SHALL ATTAIN A MINIMUM COMPRESSIVE STRENGTH OF 4,000 p.s.i. AT 28 DAYS.

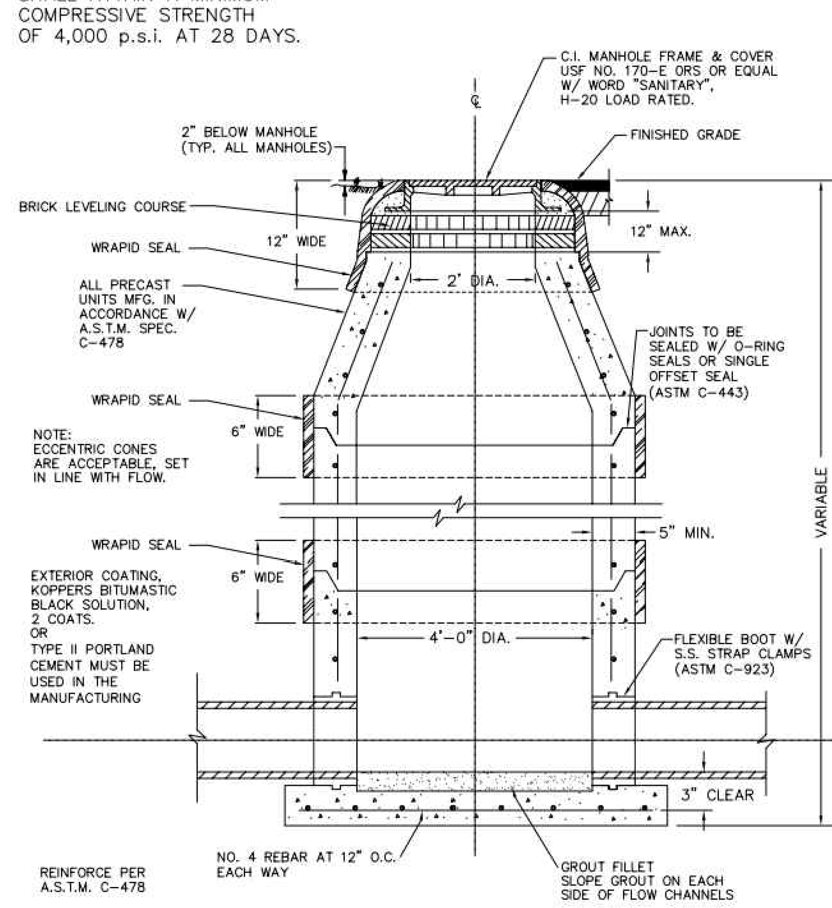

NOTE:

1. WRAPID SEAL MUST BE USED ON ALL JOINTS, CASTINGS AND RISER RINGS: ON ALL JOINTS ON AIR RELEASES, MANHOLES, GREASE/WATER, OIL/WATER SEPARATORS, AND WETWELLS.
2. WRAPID SEAL MUST BE USED IN ACCORDANCE WITH MANUFACTURES RECOMMENDATIONS.
3. PASCO COUNTY SHALL HAVE THE OPTION OF SPECIFYING THE TYPE OF INTERIOR LINING TO BE INSTALLED FOR EACH INDIVIDUAL MANHOLE.
4. PASCO COUNTY SHALL HAVE THE OPTION OF REQUIRING A NEGATIVE PRESSURE TEST PER ASTM C-1244
5. LIFT HOLES MUST NOT PENETRATE THE WALLS

CREATED 02/24/03 REVISED	STANDARD MANHOLE	PROVIDED FOR INFORMATIONAL PURPOSES ONLY. NO MODIFICATIONS WITHOUT WRITTEN PCU APPROVAL
	PASCO COUNTY UTILITIES	DETAIL 41

NOTE:
ECCENTRIC CONES ARE ACCEPTABLE, SET IN LINE WITH FLOW.

EXTERIOR COATING, KOPPERS BITUMASTIC BLACK SOLUTION, 2 COATS. OR TYPE II PORTLAND CEMENT MUST BE USED IN THE MANUFACTURING PROCESS

NOTE:
PRECAST CONCRETE SHALL ATTAIN A MINIMUM COMPRESSIVE STRENGTH OF 4,000 p.s.i. AT 28 DAYS.

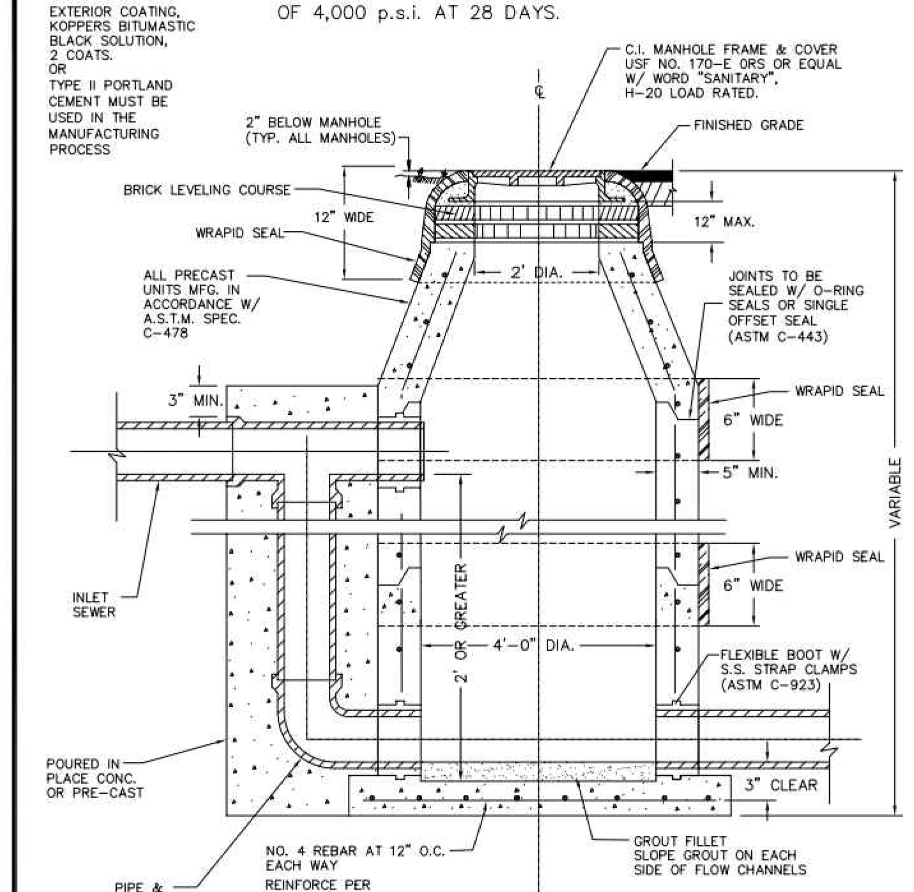

NOTE:

1. WRAPID SEAL MUST BE USED ON ALL JOINTS, CASTINGS AND RISER RINGS: ON ALL JOINTS ON AIR RELEASES, MANHOLES, GREASE/WATER, OIL/WATER SEPARATORS, AND WETWELLS.
2. WRAPID SEAL MUST BE USED IN ACCORDANCE WITH MANUFACTURES RECOMMENDATIONS.
3. PASCO COUNTY SHALL HAVE THE OPTION OF SPECIFYING THE TYPE OF INTERIOR LINING TO BE INSTALLED FOR EACH INDIVIDUAL MANHOLE.
4. PASCO COUNTY SHALL HAVE THE OPTION OF REQUIRING A NEGATIVE PRESSURE TEST PER ASTM C-1244
5. LIFT HOLES MUST NOT PENETRATE THE WALLS

CREATED 02/24/03 REVISED	DROP MANHOLE	PROVIDED FOR INFORMATIONAL PURPOSES ONLY. NO MODIFICATIONS WITHOUT WRITTEN PCU APPROVAL
	PASCO COUNTY UTILITIES	DETAIL 42

NOTE:
PRECAST CONCRETE SHALL ATTAIN A MINIMUM COMPRESSIVE STRENGTH OF 4,000 p.s.i. AT 28 DAYS.

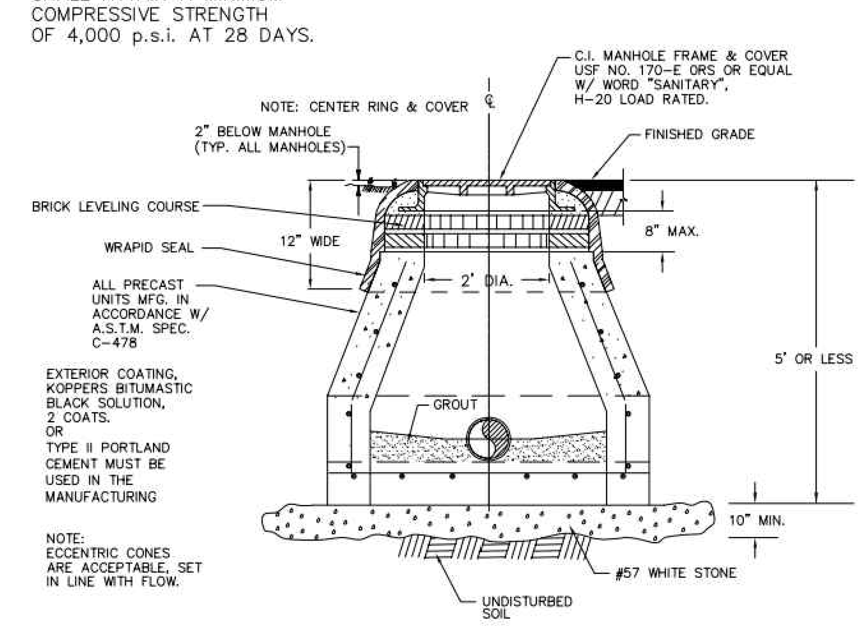

NOTE:

- A BEDDING OF CLASS I, CLASS II, OR CLASS III MATERIAL SHALL BE REQUIRED WHEN THE MANHOLE BOTTOM CANNOT BE INSTALLED ON UNDISTURBED SOIL OR IF THE NATIVE SOIL IS CLASS IV OR CLASS V MATERIAL.
- THIS TYPE OF CONSTRUCTION SHALL BE LIMITED TO DEPTHS OF (0-5) FEET.
- EXTERIOR COATING SHALL BE KOPPERS BITUMASTIC BLACK SOLUTION, 2 COATS.
- WRAPID SEAL MUST BE USED ON ALL JOINTS, CASTINGS AND RISER RINGS. WRAPID SEAL MUST BE USED IN ACCORDANCE WITH MANUFACTURER'S RECOMMENDATIONS.
- PASCO COUNTY SHALL HAVE THE OPTION OF SPECIFYING THE TYPE OF INTERIOR LINING TO BE INSTALLED FOR EACH INDIVIDUAL MANHOLE.
- PASCO COUNTY SHALL HAVE THE OPTION OF REQUIRING A NEGATIVE PRESSURE TEST PER ASTM C-1244
- LIFT HOLES MUST NOT PENETRATE THE WALLS

CREATED 02/24/03 REVISED	MANHOLE SHALLOW CONSTRUCTION (CLOSED BOTTOM)	PROVIDED FOR INFORMATIONAL PURPOSES ONLY. NO MODIFICATIONS WITHOUT WRITTEN PCU APPROVAL
	PASCO COUNTY UTILITIES	DETAIL 43

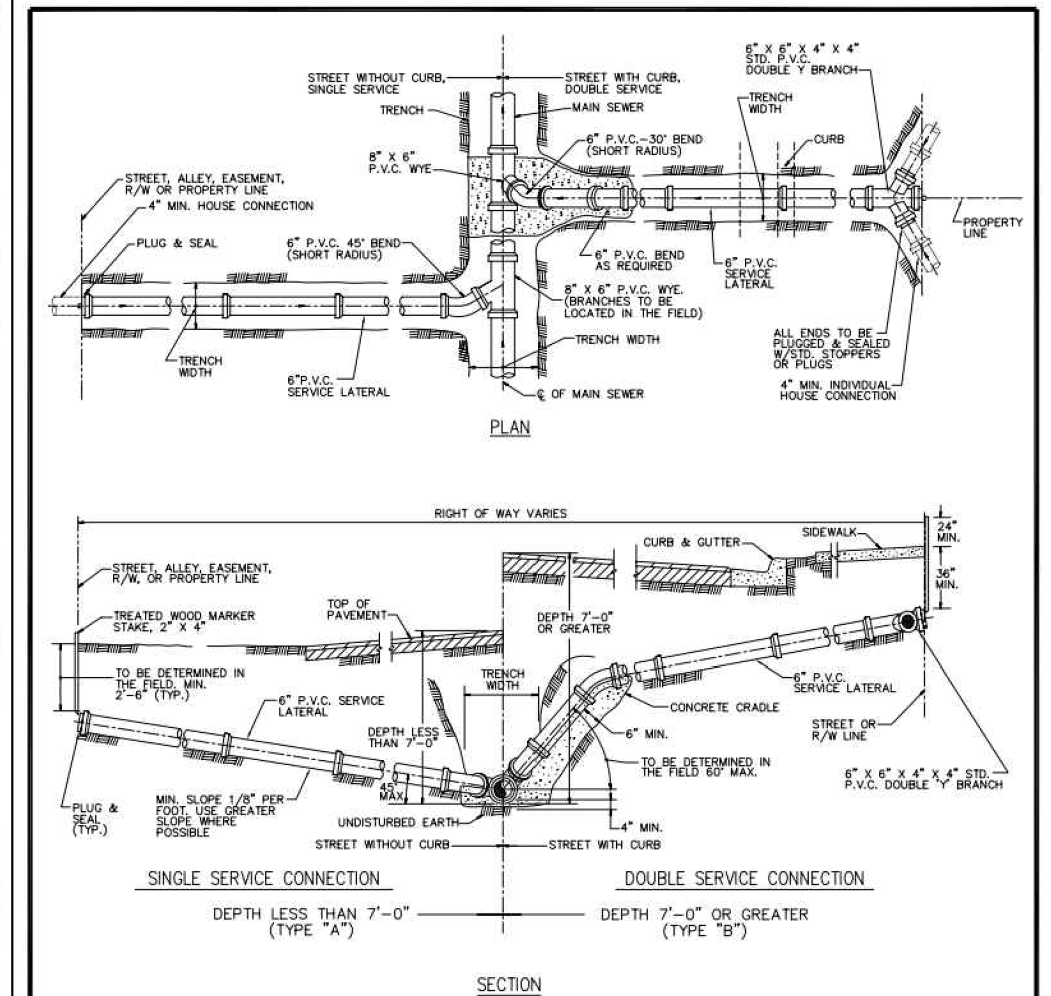

NOTE:

- CONTRACTOR SHALL MAKE, ON A CLEAN SET OF PLANS, THE FINAL STATIONING OR DISTANCE AND DIRECTION FROM MANHOLE OF EACH SERVICE LATERAL AND THEN GIVE TO ENGINEER FOR RECORD PURPOSES.
- PROVIDE 2" x 4" PRESSURE TREATED WOOD MARKER STAKE AT ALL SANITARY SERVICES (INCLUDE IN PIPE PRICE), TOP OF STAKE TO BE PAINTED WITH GREEN PAINT.
- THE MINIMUM DIAMETER OF ALL SERVICE LATERALS SHALL BE 6 INCHES.

CREATED 02/24/03 REVISED	SEWER LATERAL CONNECTION	PROVIDED FOR INFORMATIONAL PURPOSES ONLY. NO MODIFICATIONS WITHOUT WRITTEN PCU APPROVAL
	PASCO COUNTY UTILITIES	DETAIL 44

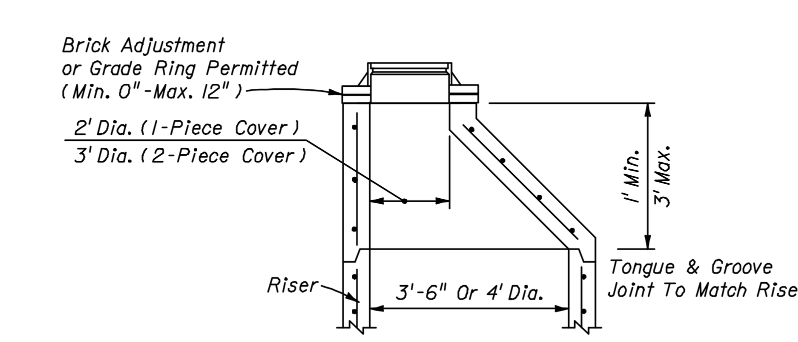

FDOT TYPE 8
PRECAST ECCENTRIC CONE
N.T.S.

PAUL E. SKIDMORE LICENSE NO. 39631 STATE OF FLORIDA PROFESSIONAL ENGINEER

JOB NO. 506-100F
EPN 213
DATE 10-1-2015
DESIGNED RAH
DRAWN RAH
CHECKED PES
Q.C.

NO.	DATE	REVISIONS	APP'D BY

DESIGNED FOR
ASTURIA COMMUNITY DEVELOPMENT DISTRICT
605 PALENCIA CLUB DRIVE, ST. AUGUSTINE, FLORIDA 32095
PHONE: (904) 810-0500 - FAX: (904) 810-0525 - E-MAIL: sean.manson@hines.com

PROJECT NAME
Asturia
PHASE 2

SHEET NAME
UTILITY DETAILS (2)

ENGINEER / SURVEYOR
FLORIDA DESIGN CONSULTANTS, INC.
THINK IT. ACHIEVE IT.
3030 STARKEY BOULEVARD, NEW PORT RICHEY, FLORIDA 34655
PHONE: (800) 532 - 1047 FAX: (727) 848 - 3648 WWW.FLDESIGN.COM C.A. NO. 7421
E-MAIL: pskidmore@fldesign.com

PLAN SET DATE
October 7, 2015

©Copyright 2015 Florida Design Consultants, Inc. Drawings and concepts may not be used or reproduced without written permission.

K:\213\ProjData\ConstDocs\Plans\Phase 2\213_ASTURIA-PH2-PDTUT-2.dwg - Oct 20, 2015 @ 1:36pm - rhall

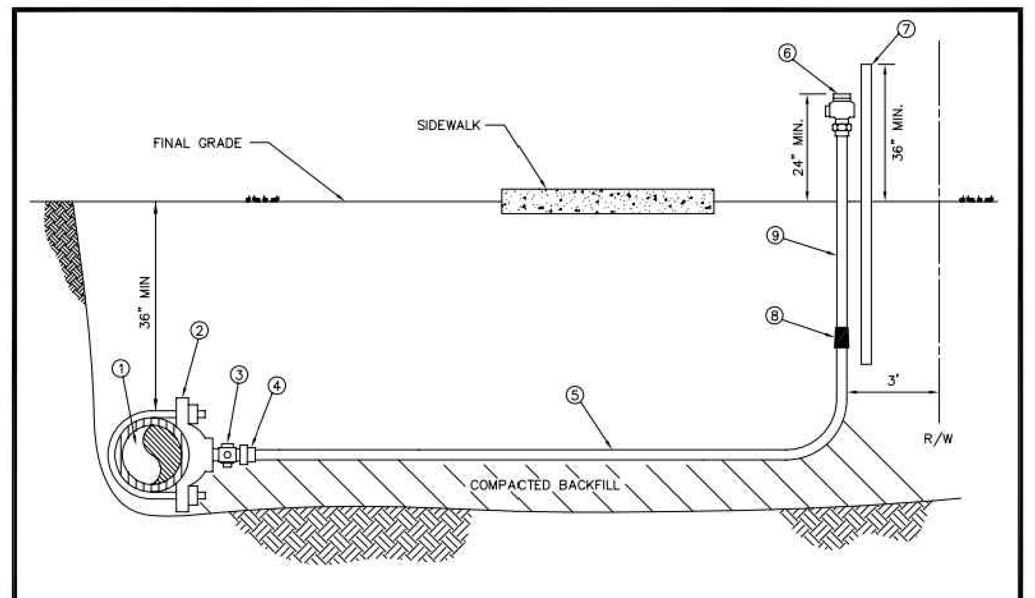

MATERIALS		
ITEM	QUANT.	DESCRIPTION
1	*	PIPE, PVC (DR-18) OR D.I.P.
2	1	SADDLE, SERVICE W/ 1" F.I.P. THREAD
3	1	1" CORPORATION (M.I.P. x COMP.)
4	1	1" INSERT (STAINLESS STEEL)
5	*	1" TUBING, POLYETHYLENE
6	1	3/4" WATER OR 1" REUSE CURB STOP BALL
		VALVE W/ LOCK WINGS (F.I.P. x COMP.)
7	1	2" x 4" P.T. MARKER STAKE
8	1	1" x 3/4" COUPLING (COMP. x COMP.) WATER ONLY
9	1	3/4" WATER OR 1" REUSE TUBING, POLYETHYLENE 4'

NOTES:
- ALL FITTINGS FOR POLYETHYLENE TUBING ARE BRASS COMPRESSION TYPE.
- A VALVE BOX MAY BE REQUIRED AS SPECIFIED BY THE ENGINEER.
- CURB STOP TO TERMINATE 24" ABOVE GROUND AT R/W LINE.
- REUSE CURB STOPS = 1" / WATER CURB STOPS = 3/4"
- TUBING TO BE YARDLEY 3406 OR EQUAL.
- SADDLES 2" – 3" TO BE BRASS FULL CIRCLE TYPE.
- SADDLES 4" AND LARGER TO BE D.I. DUAL STRAP TYPE.
- CURB STOPS TO BE TIED TO MARKER STAKE.
- SADDLE MAY BE INSTALLED AT ANGLE (WITHIN 45° OF HORIZONTAL).
- MARKER STAKES PAINTED SAFETY BLUE FOR WATER, PURPLE FOR REUSE.

CREATED 02/24/03
REVISED

SINGLE NEAR SIDE WATER SERVICE – 3/4"
SINGLE NEAR SIDE REUSE SERVICE – 1"
POLYETHYLENE TUBING

PROVIDED FOR INFORMATIONAL PURPOSES ONLY. NO MODIFICATIONS WITHOUT WRITTEN PCU APPROVAL

PASCO COUNTY UTILITIES — DETAIL 17

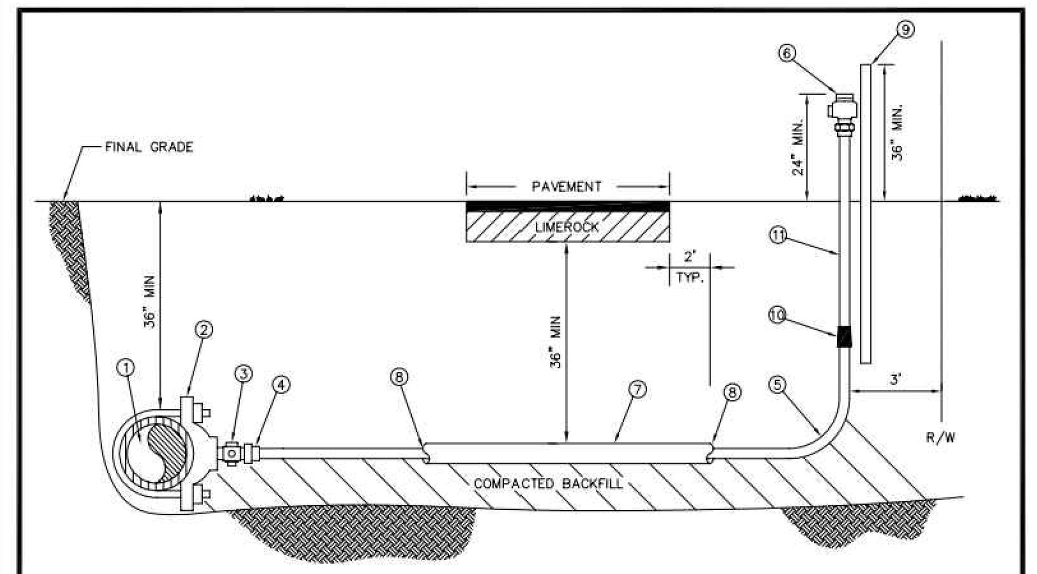

MATERIALS		
ITEM	QUANT.	DESCRIPTION
1	*	PIPE, PVC (DR-18) OR D.I.P.
2	1	SADDLE, SERVICE W/ 1" F.I.P. THREAD
3	1	1" CORPORATION (M.I.P. x COMP.)
4	1	1" INSERT (STAINLESS STEEL)
5	*	1" TUBING, POLYETHYLENE
6	1	3/4" WATER OR 1" REUSE CURB STOP BALL
		VALVE W/ LOCK WINGS (F.I.P. x COMP.)
7	*	2" CASING, PVC OR HDPE – 2' BEYOND EDGE PAVEMENT
8	*	SEALER, RAM-NEK
9	1	2" x 4" P.T. MARKER STAKE
10	1	1" x 3/4" COUPLING (COMP. x COMP.) WATER ONLY
11	1	3/4" WATER OR 1" REUSE TUBING, POLYETHYLENE 4'

NOTES:
- ALL FITTINGS FOR POLYETHYLENE TUBING ARE BRASS COMPRESSION TYPE.
- A VALVE BOX MAY BE REQUIRED AS SPECIFIED BY THE ENGINEER.
- CURB STOP TO TERMINATE 24" ABOVE GROUND AT R/W LINE.
- REUSE CURB STOPS = 1" / WATER CURB STOPS = 3/4"
- TUBING TO BE YARDLEY 3406 OR EQUAL.
- SADDLES 2" – 3" TO BE BRASS FULL CIRCLE TYPE.
- SADDLES 4" AND LARGER TO BE D.I. DUAL STRAP TYPE.
- CURB STOPS TO BE TIED TO MARKER STAKE.
- SADDLE MAY BE INSTALLED AT ANGLE (WITHIN 45° OF HORIZONTAL).
- MARKER STAKES PAINTED SAFETY BLUE FOR WATER, PURPLE FOR REUSE.

CREATED 02/24/03
REVISED

SINGLE FAR SIDE WATER SERVICE – 3/4"
SINGLE FAR SIDE REUSE SERVICE – 1"
POLYETHYLENE TUBING

PROVIDED FOR INFORMATIONAL PURPOSES ONLY. NO MODIFICATIONS WITHOUT WRITTEN PCU APPROVAL

PASCO COUNTY UTILITIES — DETAIL 18

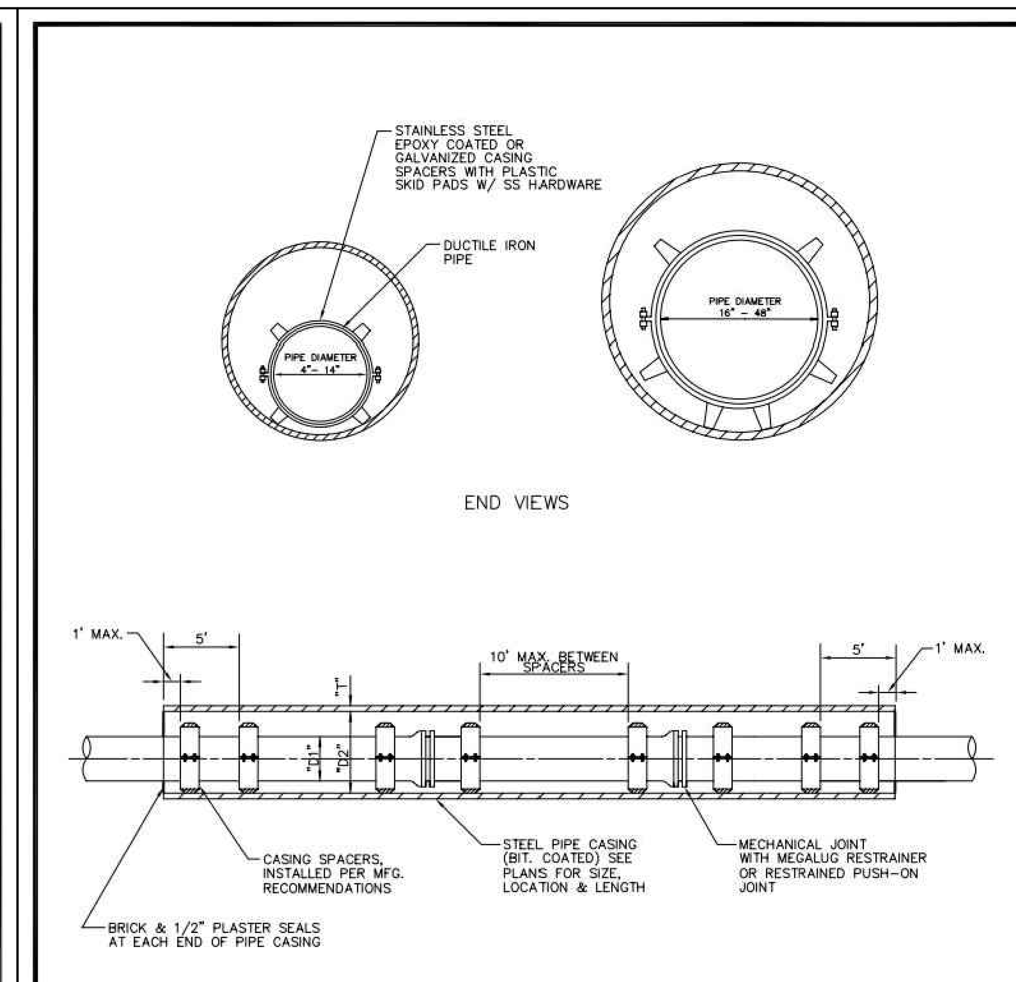

NOTE:
- CARRIER PIPE FOR WATER & REUSE MAINS SHALL BE CEMENT MORTAR LINED D.I.P.
- CARRIER PIPE FOR SEWER/FORCE MAINS SHALL BE GLASS FLAKE EPOXY (PROTECTO 401) OR POLYETHYLENE LINED D.I.P.
- CARRIER PIPE TO BE COLOR CODED WITH PAINT STRIPES:
  - WATER – BLUE
  - REUSE – PURPLE
  - SEWER – GREEN
- CASING SHALL EXTEND 8' MINIMUM BEYOND EDGE OF PAVEMENT.

CREATED 02/24/03
REVISED

JACK & BORE
CARRIER DETAIL

PROVIDED FOR INFORMATIONAL PURPOSES ONLY. NO MODIFICATIONS WITHOUT WRITTEN PCU APPROVAL

PASCO COUNTY UTILITIES — DETAIL 33

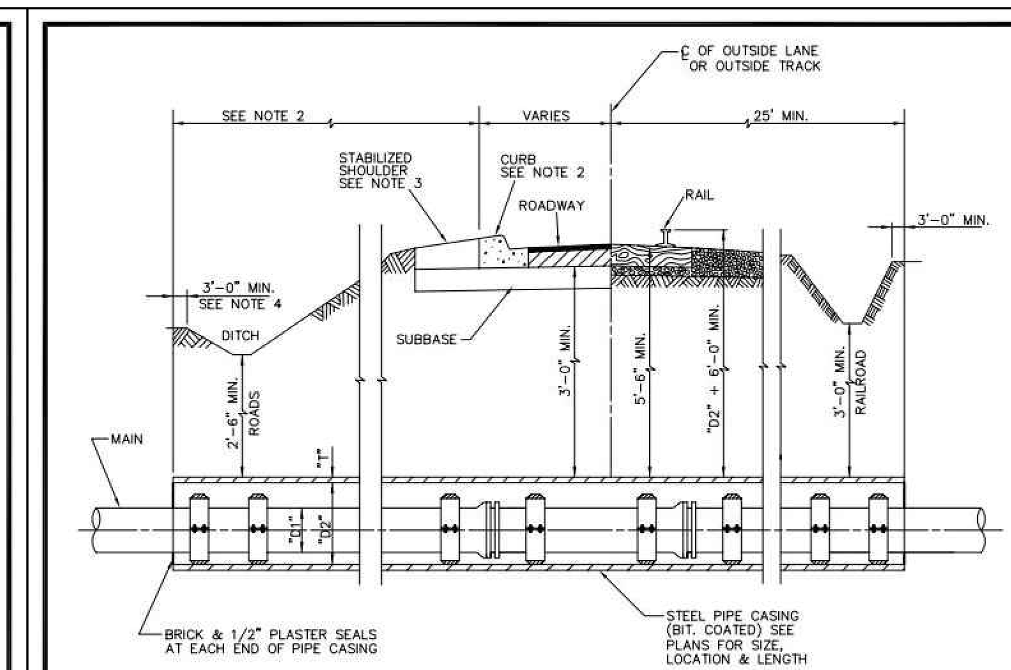

NOTE:
1. VERTICAL DIMENSIONS ARE TYPICAL FOR MAINS.
2. CASINGS SHALL TERMINATE 8' MINIMUM BEYOND EDGE OF PAVEMENT.
3. CASINGS SHALL HAVE 30" MINIMUM COVER UNDER DITCH BOTTOMS AND 36" ELSEWHERE.
4. GRAVITY SEWERS SHALL BE PROPERLY ANCHORED TO PREVENT FLOATATION WITH SPACERS ADJUSTED TO PROVIDE THE SLOPE REQUIRED.
5. SEE SECTION B.2 FOR CASING SIZE.

CARRIER PIPE (INCHES)	CASING PIPE (INCHES)	CASING WALL THICKNESS (INCHES)
4	12	1/4
6	16	1/4
8	16	1/4
10	24	5/16
12	24	5/16
16	30	3/8
20	36	3/8
24	42	3/8
30	48	3/8
36	54	1/2
42	60	1/2
48	66	1/2

CREATED 02/24/03
REVISED

JACK & BORE
DETAIL

PROVIDED FOR INFORMATIONAL PURPOSES ONLY. NO MODIFICATIONS WITHOUT WRITTEN PCU APPROVAL

PASCO COUNTY UTILITIES — DETAIL 38

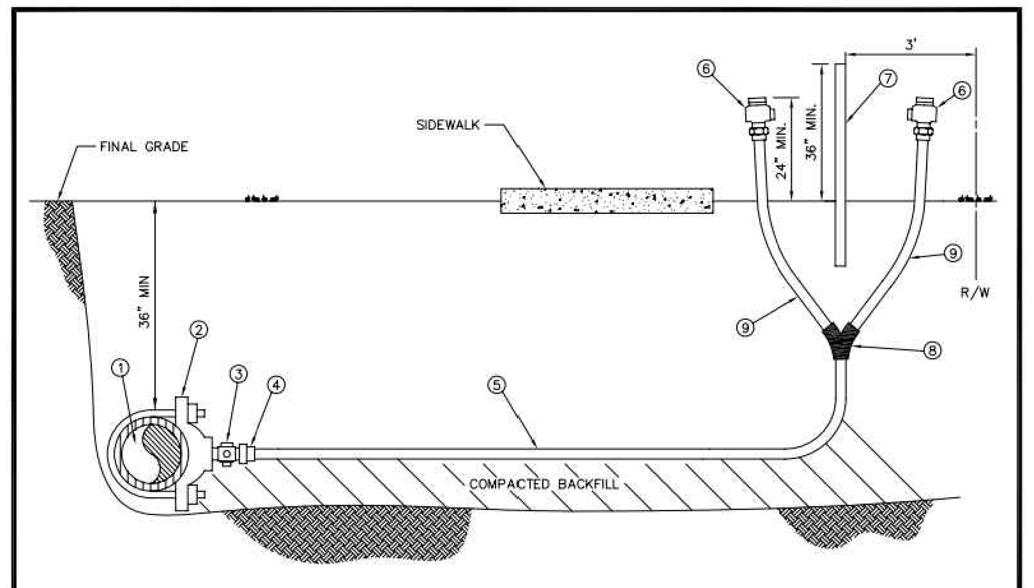

MATERIALS		
ITEM	QUANT.	DESCRIPTION
1	*	PIPE, PVC (DR-18) OR D.I.P.
2	1	SADDLE, SERVICE W/ 1" F.I.P. THREAD
3	1	1" CORPORATION (M.I.P. x COMP.)
4	1	1" INSERT (STAINLESS STEEL)
5	*	1" TUBING, POLYETHYLENE
6	1	3/4" WATER OR 1" REUSE CURB STOP BALL
		VALVE W/ LOCK WINGS (F.I.P. x COMP.)
7	1	2" x 4" P.T. MARKER STAKE
8	1	1" x 3/4" WYE BRANCH (COMP. x COMP.) WATER ONLY
		1" x 1" WYE BRANCH (COMP. x COMP.) REUSE ONLY
9	1	3/4" WATER OR 1" REUSE TUBING, POLYETHYLENE 4'

NOTES:
- ALL FITTINGS FOR POLYETHYLENE TUBING ARE BRASS COMPRESSION TYPE.
- A VALVE BOX MAY BE REQUIRED AS SPECIFIED BY THE ENGINEER.
- CURB STOP TO TERMINATE 24" ABOVE GROUND AT R/W LINE.
- REUSE CURB STOPS = 1" / WATER CURB STOPS = 3/4"
- TUBING TO BE YARDLEY 3406 OR EQUAL.
- SADDLES 2" – 3" TO BE BRASS FULL CIRCLE TYPE.
- SADDLES 4" AND LARGER TO BE D.I. DUAL STRAP TYPE.
- CURB STOPS TO BE TIED TO MARKER STAKE.
- SADDLE MAY BE INSTALLED AT ANGLE (WITHIN 45° OF HORIZONTAL).
- MARKER STAKES PAINTED SAFETY BLUE FOR WATER, PURPLE FOR REUSE.

CREATED 02/24/03
REVISED

DOUBLE NEAR SIDE WATER SERVICE – 3/4"
DOUBLE NEAR SIDE REUSE SERVICE – 1"
POLYETHYLENE TUBING

PROVIDED FOR INFORMATIONAL PURPOSES ONLY. NO MODIFICATIONS WITHOUT WRITTEN PCU APPROVAL

PASCO COUNTY UTILITIES — DETAIL 19

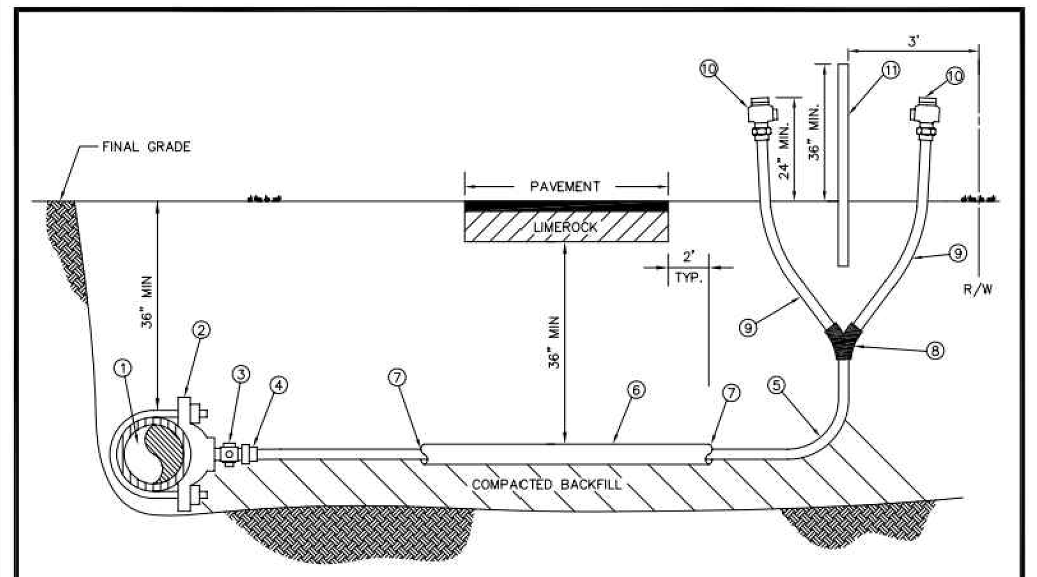

MATERIALS		
ITEM	QUANT.	DESCRIPTION
1	*	PIPE, PVC (DR-18) OR D.I.P.
2	1	SADDLE, SERVICE W/ 1" F.I.P. THREAD
3	1	1" CORPORATION (M.I.P. x COMP.)
4	1	1" INSERT (STAINLESS STEEL)
5	*	1" TUBING, POLYETHYLENE
6	*	2" CASING, PVC OR HDPE – 2' BEYOND EDGE PAVEMENT
7	*	SEALER, RAM-NEK
8	1	WYE BRANCH FOR POLY TUBING
9	2	3/4" WATER OR 1" REUSE TUBING, POLYETHYLENE 4'
10	2	3/4" WATER OR 1" REUSE CURB STOP BALL
		VALVE W/ LOCK WINGS (F.I.P. x COMP.)
11	1	2" x 4" P.T. MARKER STAKE

NOTES:
- ALL FITTINGS FOR POLYETHYLENE TUBING ARE BRASS COMPRESSION TYPE.
- A VALVE BOX MAY BE REQUIRED AS SPECIFIED BY THE ENGINEER.
- CURB STOP TO TERMINATE 24" ABOVE GROUND AT R/W LINE.
- REUSE CURB STOPS = 1" / WATER CURB STOPS = 3/4"
- TUBING TO BE YARDLEY 3406 OR EQUAL.
- SADDLES 2" – 3" TO BE BRASS FULL CIRCLE TYPE.
- SADDLES 4" AND LARGER TO BE D.I. DUAL STRAP TYPE.
- CURB STOPS TO BE TIED TO MARKER STAKE.
- SADDLE MAY BE INSTALLED AT ANGLE (WITHIN 45° OF HORIZONTAL).
- MARKER STAKES PAINTED SAFETY BLUE FOR WATER, PURPLE FOR REUSE.

CREATED 02/24/03
REVISED

WATER AND REUSE LATERAL SERVICE 3/4"
(DOUBLE – FAR SIDE)
POLYETHYLENE TUBING

PROVIDED FOR INFORMATIONAL PURPOSES ONLY. NO MODIFICATIONS WITHOUT WRITTEN PCU APPROVAL

PASCO COUNTY UTILITIES — DETAIL 20

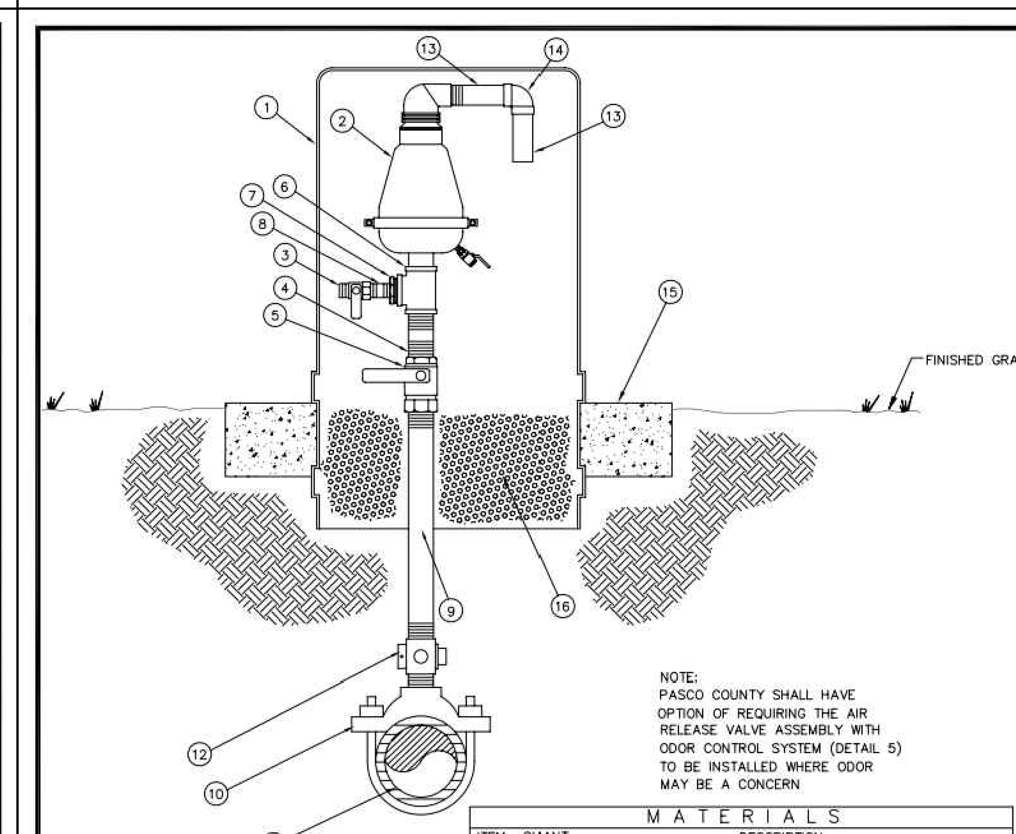

NOTE:
PASCO COUNTY SHALL HAVE OPTION OF REQUIRING THE AIR RELEASE VALVE ASSEMBLY WITH ODOR CONTROL SYSTEM (DETAIL 5) TO BE INSTALLED WHERE ODOR MAY BE A CONCERN

NOTE:
VENTED ENCLOSURE TO BE COLOR CODED AS FOLLOWS:

WATER MAIN – BLUE
FORCE MAIN – GREEN
REUSE MAIN – PURPLE

MATERIALS		
ITEM	QUANT.	DESCRIPTION
1	1	VENTED ENCLOSURE, WATER PLUS CORP. MODEL #131632
2	1	AIR RELEASE VALVE 2" NPT (SEE BELOW)
		SEWER AIR RELEASE VALVES SHALL BE ARI MODEL D-025
		WATER AIR RELEASE VALVES SHALL BE VALMATIC OR EQUAL
3	1	1" CURB STOP, S.S.
4	1	2" x 4" NIPPLE, S.S.
5	1	2" BALL VALVE, S.S.
6	1	2" TEE, S.S.
7	1	2" X 1" REDUCER, S.S.
8	1	1" SHORT NIPPLE, S.S.
9	1	2" PIPE, S.S. LENGTH AS REQUIRED
10	1	2" DOUBLE STRAP TAPPING SADDLE, S.S.
11	1	4" & LARGER PIPE, D.I. OR PVC (DR-18)
12	1	2" CORPORATION BRASS
13	2	1-1/2" PIPE, PVC, LENGTH AS REQUIRED
14	1	1-1/2" x 90° ELBOW, PVC
15	1	CONCRETE SLAB AROUND ENCLOSURE
16	1	#57 WHITE ROCK

CREATED 02/24/03
REVISED

STANDARD AIR RELEASE VALVE ASSEMBLY
(VERTICAL PIPE LAYOUT)

PROVIDED FOR INFORMATIONAL PURPOSES ONLY. NO MODIFICATIONS WITHOUT WRITTEN PCU APPROVAL

PASCO COUNTY UTILITIES — DETAIL 4

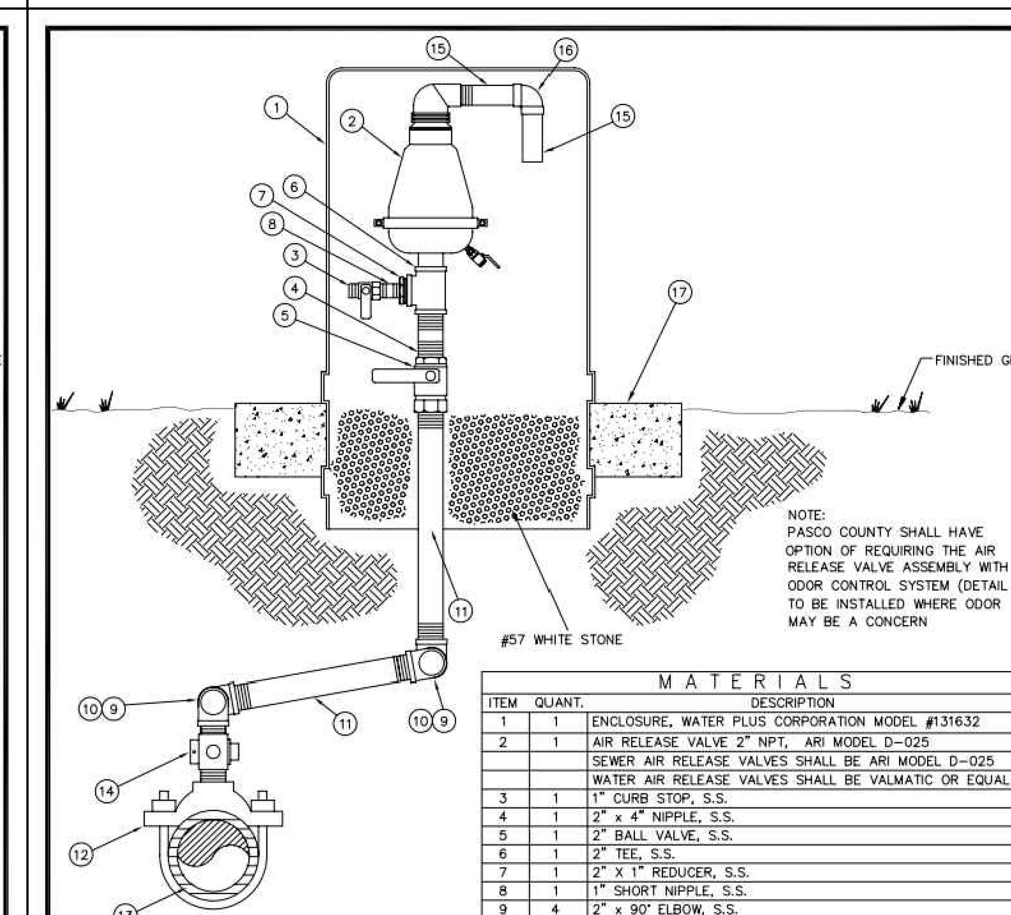

NOTE:
PASCO COUNTY SHALL HAVE OPTION OF REQUIRING THE AIR RELEASE VALVE ASSEMBLY WITH ODOR CONTROL SYSTEM (DETAIL 5a) TO BE INSTALLED WHERE ODOR MAY BE A CONCERN

MATERIALS		
ITEM	QUANT.	DESCRIPTION
1	1	ENCLOSURE, WATER PLUS CORPORATION MODEL #131632
2	1	AIR RELEASE VALVE 2" NPT, ARI MODEL D-025
		SEWER AIR RELEASE VALVES SHALL BE ARI MODEL D-025
		WATER AIR RELEASE VALVES SHALL BE VALMATIC OR EQUAL
3	1	1" CURB STOP, S.S.
4	1	2" x 4" NIPPLE, S.S.
5	1	2" BALL VALVE, S.S.
6	1	2" TEE, S.S.
7	1	2" X 1" REDUCER, S.S.
8	1	1" SHORT NIPPLE, S.S.
9	4	2" x 90° ELBOW, S.S.
10	2	2" SHORT NIPPLE, S.S.
11	2	2" PIPE, S.S. LENGTH AS REQUIRED
12	1	2" DOUBLE STRAP TAPPING SADDLE, S.S.
13	1	4" & LARGER PIPE, D.I. OR PVC (DR-18)
14	1	2" CORPORATION BRASS
15	2	1-1/2" PIPE, PVC, LENGTH AS REQUIRED
16	1	1-1/2" x 90° ELBOW, PVC
17	1	CONCRETE SLAB AROUND ENCLOSURE

NOTE:
VENTED ENCLOSURE TO BE COLOR CODED AS FOLLOWS:

WATER MAIN – BLUE
FORCE MAIN – GREEN
REUSE MAIN – PURPLE

CREATED 02/24/03
REVISED

STANDARD AIR RELEASE VALVE ASSEMBLY
ABOVE GROUND VERTICAL PIPE LAYOUT

PROVIDED FOR INFORMATIONAL PURPOSES ONLY. NO MODIFICATIONS WITHOUT WRITTEN PCU APPROVAL

PASCO COUNTY UTILITIES — DETAIL 07

DUCTILE IRON PIPE RESTRAINT

THRUST RESTRAINT ON SLIPJOINT DUCTILE IRON PIPE SHALL BE U.S. PIPE FIELD LOCK GASKETS FOR TYTON JOINT PIPE OR AMERICAN FAST-GRIP GASKETS FOR AMERICAN FASTITE PIPE. THRUST RESTRAINT ON DUCTILE IRON FITTINGS SHALL BE PROVIDED BY THE USE OF MEGALUG RETAINERS AND MECHANICAL JOINT FITTINGS.

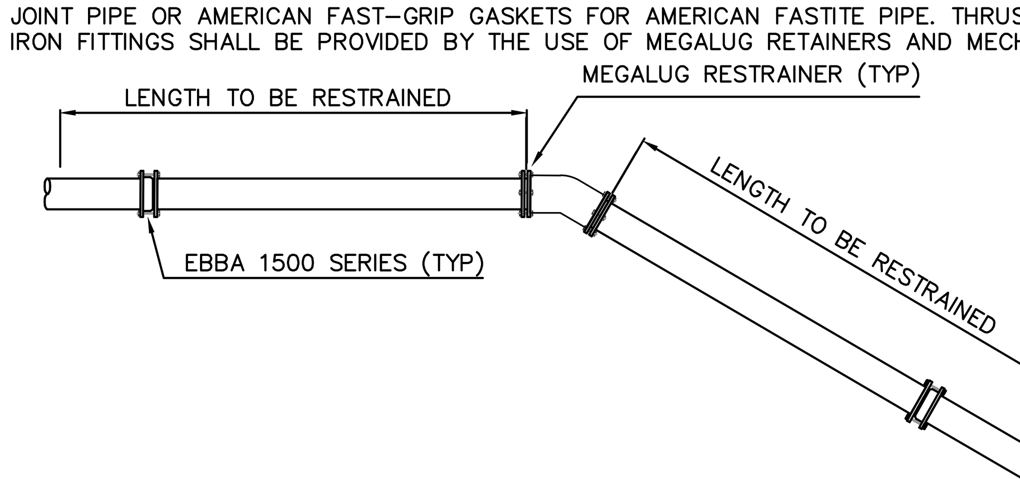

THE FOLLOWING JOINTS SHALL BE RESTRAINED IN ALL APPLICATIONS
1. BEND – INLET AND OUTLET
2. TEE – OUTLET BRANCH
3. OFFSETS – INLET AND OUTLET
4. CAPS
5. PLUGS
6. LAST TWO (2) JOINTS ON A DEAD END RUN (MIN 36')
7. LAST TWO (2) JOINTS ON A HYDRANT RUNOUT (MIN 36')

P.V.C. PIPE RESTRAINT

NOTE: THRUST RESTRAINT AT FITTINGS AND VALVES SHALL BE BY USE OF EBBA IRON MEGALUG RESTRAINERS. THRUST RESTRAINT BETWEEN PIPE JOINTS SHALL BE BY EBBA IRON SERIES 1500 RESTRAINERS.

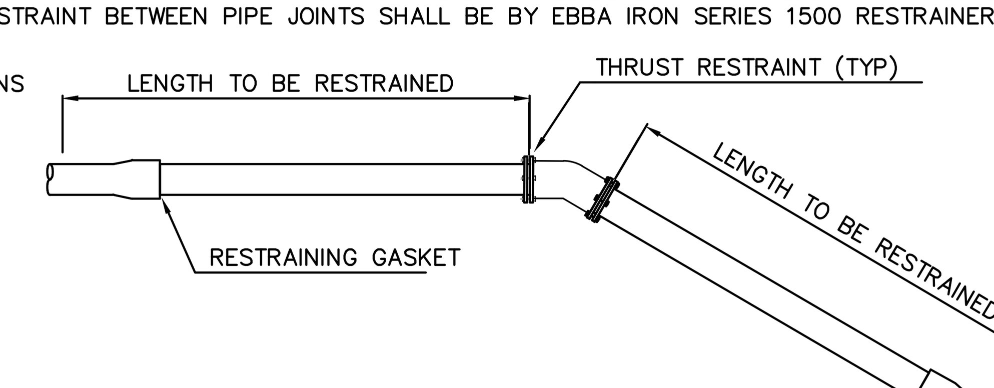

THE FOLLOWING JOINTS MUST BE RESTRAINED IN ALL APPLICATIONS
1. BEND – INLET AND OUTLET
2. TEE – OUTLET BRANCH
3. OFFSETS – INLET AND OUTLET
4. CAPS
5. PLUGS
6. DEAD END RUN
7. HYDRANT RUNOUT

ANGULAR DEFLECTION:

NOTE: NO DEFLECTION SHALL BE ALLOWED AT THE JOINT. PIPE CURVATURE SHOULD BE ACCOMPLISHED BY BENDING THE PIPE RATHER THAN DEFLECTING THE JOINTS. THE BENT PIPE IS ASSUMED TO FORM A TRUE ARC, I.E. THE PIPE IS CURVED UNIFORMLY THROUGHOUT ITS LENGTH AS FOLLOWS:

PIPE SIZE (INCHES)	MINIMUM ALLOWABLE RADIUS (FEET)
4	100*
6	150*
8	200*
10	250*
12	300*

*VERIFY WITH PIPE MANUFACTURER

PAUL E. SKIDMORE — LICENSE NO. 39631 — STATE OF FLORIDA — PROFESSIONAL ENGINEER

JOB NO. 506-100F
EPN 213
DATE 10-1-2015
DESIGNED RAH
DRAWN RAH
CHECKED PES
Q.C.

NO.	DATE	REVISIONS	APP'D BY

DESIGNED FOR
ASTURIA COMMUNITY DEVELOPMENT DISTRICT
605 PALENCIA CLUB DRIVE, ST. AUGUSTINE, FLORIDA 32095
PHONE: (904) 810-0500 - FAX: (904) 810-0525 - E-MAIL: sean.manson@hines.com

PROJECT NAME
Asturia
PHASE 2

SHEET NAME
UTILITY DETAILS (3)

ENGINEER / SURVEYOR
FLORIDA DESIGN CONSULTANTS, INC.
THINK IT. ACHIEVE IT.
3030 STARKEY BOULEVARD, NEW PORT RICHEY, FLORIDA 34655
PHONE: (800) 532 - 1047 FAX: (727) 848 - 3648 WWW.FLDESIGN.COM C.A. NO. 7421
E-MAIL: pskidmore@fldesign.com

PLAN SET DATE
October 7, 2015

©Copyright 2015 Florida Design Consultants, Inc. Drawings and concepts may not be used or reproduced without written permission.

K:\213\ProjData\ConstDocs\Plans\Phase 2\213_ASTURIA-PH2-PDTUT-3.dwg – Oct 20, 2015 @ 1:37pm – rhall

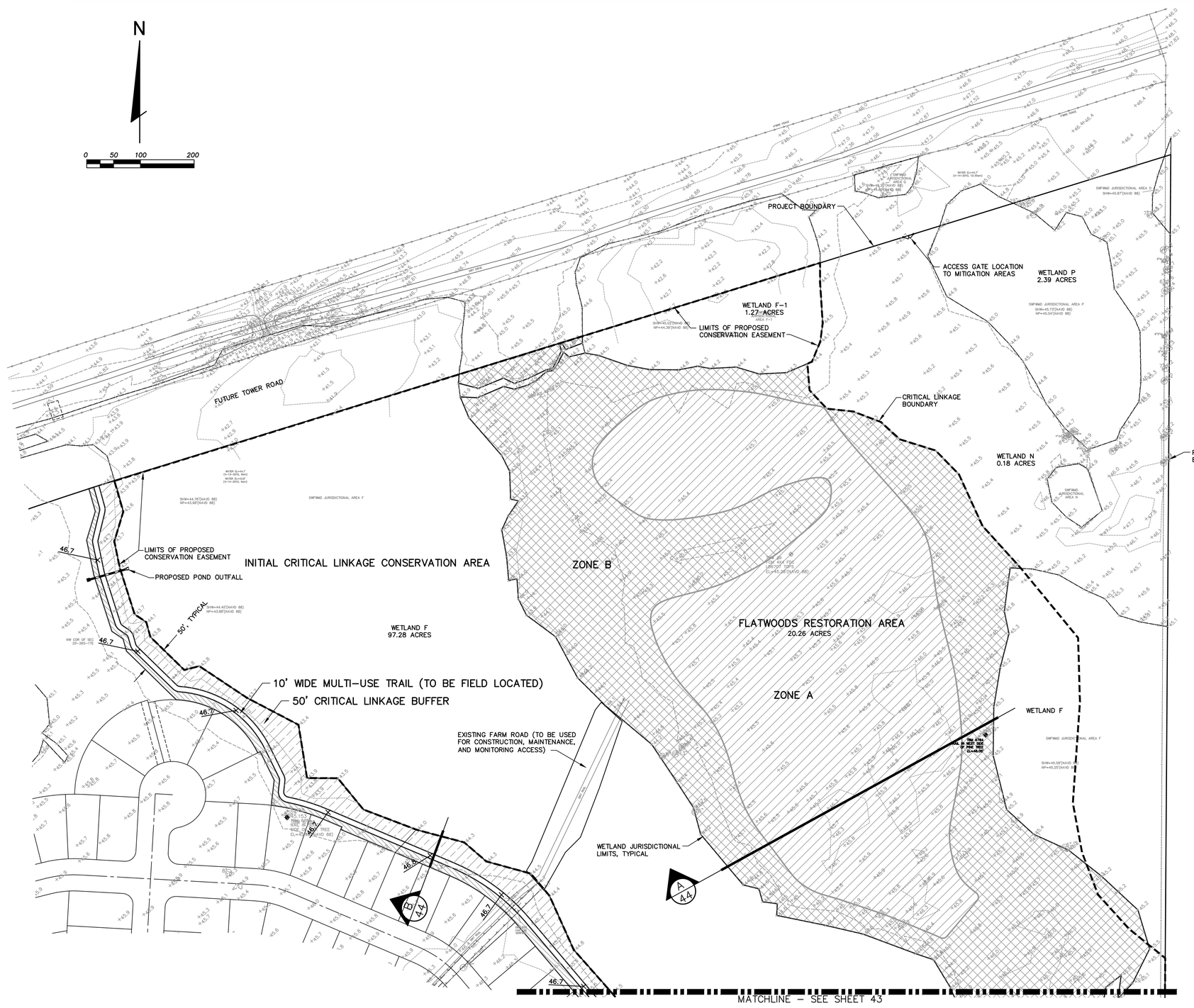

UPLAND PLANTING SCHEDULE

ZONE	SCIENTIFIC NAME	COMMON NAME	AREA (AC.)	NO.	SIZE	SPACING
A	PINUS PALUSTRIS	LONGLEAF PINE	9.10	991	1 GAL. SEEDLINGS	20' O.C.
	NATIVE SEED APPLICATION	–	9.10	1	–	–
B	PINUS ELLIOTTII	SLASH PINE	11.16	1,215	1 GAL.	20' O.C.
	QUERCUS LAURIFOLIA	LAUREL OAK		180		30' O.C.
	QUERCUS NIGRA	WATER OAK		180		30' O.C.
	SABAL PALMETTO	CABBAGE PALM		180		30' O.C.
	NATIVE SEED APPLICATION	–	11.16	1	–	–
C	QUERCUS VIRGINIANA	LIVE OAK	0.78	85	3 GAL.	20' O.C.
	CARYA GLABRA	PIGNUT HICKORY		37	1 GAL.	30' O.C.
	PRUNUS CAROLINIANA	CHERRY LAUREL		339		10' O.C.
	VACCINIUM CORYMBOSUM	HIGHBUSH BLUEBERRY		339		10' O.C.
	ILEX VOMITORIA	YAUPON HOLLY		339		
D	QUERCUS LAURIFOLIA	LAUREL OAK	4.34	472	3 GAL.	20' O.C.
	ULMUS AMERICANA	AMERICAN ELM		472		
	ILEX OPACA	AMERICAN HOLLY		630	1 GAL.	10' O.C.
	CALLICARPA AMERICANA	BEAUTY BERRY		630		
	SAMBUCUS CANADENSIS	ELDERBERRY		630		
	ILLICIUM FLORIDANUM	FLORIDA ANISE		630		

WETLAND PLANTING SCHEDULE

ZONE	SCIENTIFIC NAME	COMMON NAME	AREA (AC.)	NO.	SIZE	SPACING
A	SPARTINA BAKERI	SAND CORDGRASS	0.16	387	4 INCH CONTAINERIZED STOCK OR BAREROOT EQUIVALENT	3' O.C.
	HYPERICUM FASCICULATUM	SANDWEED		387		
B	PANICUM HEMITOMON	MAIDENCANE	0.39	629		
	JUNCUS EFFUSIS	SOFT RUSH		629		
	CANNA FLACIDA	GOLDEN CANNA		629		
C	IRIS HEXAGONA	BLUE-FLAG IRIS	0.46	742		
	JUNCUS EFFUSIS	SOFT RUSH		742		
	SAGGITTARIA LANCIFOLIA	LANCELEAF ARROWHEAD		742		

BUFFER ENHANCEMENT PLANTING SCHEDULE

ZONE	SCIENTIFIC NAME	COMMON NAME	AREA (AC.)	NO.	SIZE	SPACING
A	SABAL PALMETTO	CABBAGE PALM	0.60	30	1 GAL.	30' O.C.
	QUERCUS VIRGINIANA	LIVE OAK		22	3 GAL.	20' O.C.
	PINUS ELLIOTTII	SLASH PINE		22	1 GAL.	
	MAGNOLIA GRANDIFLORA	SOUTHERN MAGNOLIA		22	3 GAL.	
	ILLICIUM FLORIDANUM	FLORIDA ANISE		492	1 GAL.	3' O.C.
	SAGGITTARIA LANCIFOLIA	YAUPON HOLLY		492	1 GAL.	
	MUHLENBERGIA CAPILLARIS	MUHLEY GRASS		492	4 INCH CONTAINERIZED STOCK OR BAREROOT EQUIVALENT	
	JUNCUS EFFUSIS	SAND CORDGRASS		492		
	CALLICARPA AMERICANA	BEAUTY BERRY		492		
	LANTANA CAMARA	LANTANA		492		
B	ULMUS AMERICANA	AMERICAN ELM	3.35	162	1 GAL.	30' O.C.
	TAXODIUM DISTICHUM	BALD CYPRESS		91	3 GAL.	20' O.C.
	SABAL PALMETTO	CABBAGE PALM		91	1 GAL.	
	QUERCUS VIRGINIANA	LIVE OAK		91	3 GAL.	
	MAGNOLIA GRANDIFLORA	SOUTHERN MAGNOLIA		91	3 GAL.	
	SPARTINA BAKERI	YAUPON HOLLY		3243	1 GAL.	3' O.C.
	MUHLENBERGIA CAPILLARIS	MUHLEY GRASS		3243	4 INCH CONTAINERIZED STOCK OR BAREROOT EQUIVALENT	
	JUNCUS EFFUSIS	SAND CORDGRASS		3243		
	CALLICARPA AMERICANA	BEAUTY BERRY		3243		
	LANTANA CAMARA	LANTANA		3243		

PAUL E. SKIDMORE LICENSE NO. 39631 STATE OF FLORIDA PROFESSIONAL ENGINEER

JOB NO.	506-100F
EPN	213
DATE	10-1-2015
DRAWN	RAH
CHECKED	RAH
CHKD.	PES

NO.	DATE	REVISIONS

DESIGNED FOR
ASTURIA COMMUNITY DEVELOPMENT DISTRICT
2005 PALENCIA CLUB DRIVE, ST. AUGUSTINE, FLORIDA 32095
PHONE: (904) 810-0500 - FAX: (904) 810-0525 - E-MAIL: sean.mariano@dhmc.com

PROJECT NAME
Asturia
PHASE 2

SHEET NAME
CRITICAL LINKAGE MITIGATION PLAN (1)

ENGINEER / SURVEYOR
FLORIDA DESIGN CONSULTANTS, INC.
— THINK IT. ACHIEVE IT. —
3030 STARKEY BOULEVARD, NEW PORT RICHEY, FLORIDA 34655
PHONE: (800) 532 - 1047 FAX: (727) 848 - 3648 WWW.FLDESIGN.COM C.A. NO. 7421
E-MAIL: pskidmore@fldesign.com

PLAN SET DATE
October 7, 2015

SHEET 42 OF 52

©Copyright 2015 Florida Design Consultants, Inc. Drawings and concepts may not be used or reproduced without written permission.

K:\213\ProjData\ConstDocs\Plans\Phase 2\213_AS1IBA-PH2-PMITIGATION-1.dwg - Oct 20, 2015 @ 1:37pm - rhall

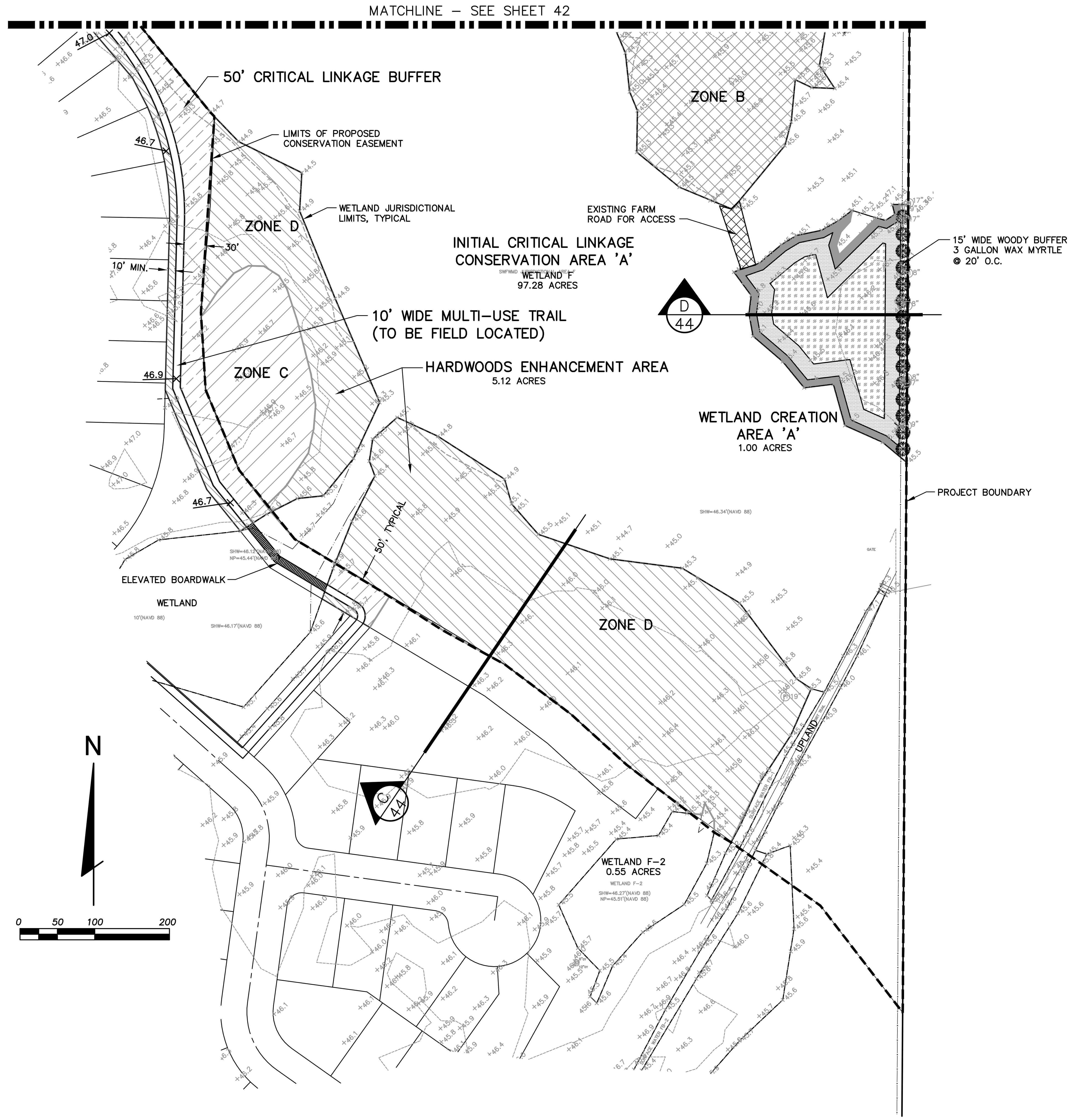

UPLAND HARDWOOD ENHANCEMENT NOTES

UPLAND HARDWOOD SUCCESS CRITERIA

AREA IS EXPECTED TO ACHIEVE VIABLE, SUSTAINABLE UPLAND HARDWOOD FUNCTIONS. UPLAND ENHANCEMENT WILL BE CONSIDERED SUCCESSFUL AND WILL BE RELEASED FROM MONITORING AND REPORTING REQUIREMENTS WHEN THE FOLLOWING CRITERIA ARE MET CONTINUOUSLY FOR A PERIOD OF AT LEAST ONE YEAR WITHOUT INTERVENTION IN THE FORM OF IRRIGATION OR THE ADDITION OR REMOVAL OF VEGETATION.

1) THE DOMINANT AND SUBDOMINANT SPECIES OF DESIRABLE UPLAND PLANTS COMPRISING EACH VEGETATION ZONE AND STRATUM OF THE AREA SHALL BE AS FOLLOWS:

ZONE	STRATUM	PERCENT COVER	[1]DOMINANT SPECIES	[1]SUBDOMINANT SPECIES
C	CANOPY	30%	LIVE OAK PIGNUT HICKORY	LAUREL OAK
	SUB-CANOPY	30%	CHERRY LAUREL YAUPON HOLLY	LAUREL OAK
	GROUNDCOVER	70%	HIGH BUSH BLUE BERRY	SAW PALMETTO
D	CANOPY	30%	LAUREL OAK AMERICAN ELM	SLASH PINE
	SUB-CANOPY	30%	AMERICAN HOLLY ELDERBERRY FLORIDA ANISE	LAUREL OAK
	GROUNDCOVER	70%	BEAUTY BERRY	SAW PALMETTO

[1]PLANT SPECIES PROVIDING THE SAME FUNCTION AS THOSE LISTED MAY ALSO BE CONSIDERED IN DETERMINING SUCCESS.

THIS CRITERION MUST BE ACHIEVED WITHIN FIVE YEARS OF PLANTING. THE PERMITTEE SHALL COMPLETE ANY ACTIVITIES NECESSARY TO ENSURE THE SUCCESSFUL ACHIEVEMENT OF THE REQUIREMENTS BY THE DEADLINE SPECIFIED. ANY REQUEST FOR AN EXTENSION OF THE DEADLINE SPECIFIED SHALL BE ACCOMPANIED WITH AN EXPLANATION AND SUBMITTED TO PASCO COUNTY FOR EVALUATION.

2) DENSITY OF SURVIVING PLANT SPECIES IN THE AREA EQUALS OR EXCEEDS THOSE REFERENCED IN THE ENVIRONMENTAL MANAGEMENT PLAN.

3) COVERAGE BY NUISANCE OR EXOTIC SPECIES DOES NOT EXCEED 5 PERCENT.

4) COVERAGE BY BAHIA GRASS DOES NOT EXCEED 20 PERCENT.

THE AREA MAY BE RELEASED FROM MONITORING AND REPORTING REQUIREMENTS AND BE DEEMED SUCCESSFUL AT ANY TIME DURING THE MONITORING PERIOD IF THE PERMITTEE DEMONSTRATES THAT THE CONDITIONS WITHIN THE UPLAND HARDWOOD ENHANCEMENT AREA ARE SUSTAINABLE.

FLATWOODS RESTORATION NOTES

SITE PREPARATION

1. ERADICATION OF EXISTING BAHIA GRASS SHALL BE ACCOMPLISHED USING A MAXIMUM OF THREE HERBICIDE AND DISC TREATMENTS BEGINNING NO EARLIER THAN MARCH 1, AND ENDING NO LATER THAN NOVEMBER 1.
2. PRIOR TO THE INITIAL HERBICIDE APPLICATION, THE RESTORATION SITE WILL BE MOWED AND FOLLOWED BY APPLICATION OF GLYPHOSPHATE HERBICIDE AND DISKING.
3. NATIVE SEED IS TO BE COLLECTED FROM THE BURNED DONOR SITE BETWEEN OCTOBER 15 AND NOVEMBER 15 AND SHOULD BE STORED FOR NO LONGER THAN ONE MONTH.
4. PRIOR TO SEEDING, THE RESTORATION AREA SHALL BE HARROWED TO PROVIDE (±) ONE INCH GROOVES TO PREVENT WIND DISPERSAL OF THE SEEDS.
5. NATIVE SEED MIXTURE IS TO BE APPLIED AT THE RATE OF 10 POUNDS PER ACRE.
6. FOLLOWING SEED APPLICATION, THE RESTORATION AREA IS TO BE ROLLED USING A WATER-WEIGHTED ROLLER TO DISCOURAGE SEED DISPERSAL BY WINDS.

MONITORING AND MAINTENANCE:

A MONITORING AND MAINTENANCE PROGRAM WILL BE INITIATED UPON COMPLETION OF PLANT INSTALLATION AND SEEDING. PURSUANT TO SPECIFIC CONDITIONS OF THE APPROVED PERMITS, MONITORING AND MAINTENANCE OF THE AREA WILL BE CONDUCTED BETWEEN MARCH 1 AND NOVEMBER 30 OF EACH YEAR. MONITORING REPORTS WILL BE SUBMITTED TO PASCO COUNTY AND SWFWMD WITHIN 30 DAYS OF THE PERFORMANCE OF THE MONITORING EVENT. MONITORING REPORTS WILL PROVIDE PHOTOGRAPHIC DOCUMENTATION OF THE AREA FROM FIXED REFERENCE POINTS AND WILL DISCUSS THE SURVIVAL RATES OF PLANTED VEGETATION, MEAN COVERAGE BY NATIVE PLANTS IN SEEDED PLOTS, AND PROVIDE ESTIMATES OF NUISANCE SPECIES COVERAGES. THE MONITORING REPORTS WILL ALSO INCLUDE A DESCRIPTION OF ALL MAINTENANCE EFFORTS WHICH WILL BE CONDUCTED IN TANDEM WITH EACH MONITORING EVENT.

SUCCESS CRITERIA:

THE AREA IS EXPECTED TO ACHIEVE VIABLE, SUSTAINABLE HYDRIC OR MESIC FLATWOODS FUNCTIONS. FLATWOODS RESTORATION WILL BE CONSIDERED SUCCESSFUL AND WILL BE RELEASED FROM MONITORING AND REPORTING REQUIREMENTS WHEN THE FOLLOWING CRITERIA ARE MET CONTINUOUSLY FOR A PERIOD OF AT LEAST ONE YEAR WITHOUT INTERVENTION IN THE FORM OF IRRIGATION OR THE ADDITION OR REMOVAL OF VEGETATION.

1) THE DOMINANT AND SUBDOMINANT SPECIES OF DESIRABLE PLANTS COMPRISING EACH VEGETATION ZONE AND STRATUM OF THE MITIGATION AREA SHALL BE AS FOLLOWS:

ZONE	STRATUM	PERCENT COVER	[1]DOMINANT SPECIES	[1]SUBDOMINANT SPECIES
A	CANOPY	20%	LONGLEAF PINE	SLASH PINE LAUREL OAK
	GROUND COVER	50%	WIREGRASS	GALL BERRY SAW PALMETTO
B	CANOPY	20%	SLASH PINE	WATER OAK LAUREL OAK
	GROUND COVER	50%	WIREGRASS	GALL BERRY SAW PALMETTO

[1]PLANT SPECIES PROVIDING THE SAME FUNCTION AS THOSE LISTED MAY ALSO BE CONSIDERED IN DETERMINING SUCCESS.

THIS CRITERION MUST BE ACHIEVED WITHIN FIVE YEARS OF RESTORATION. THE PERMITTEE SHALL COMPLETE ANY ACTIVITIES NECESSARY TO ENSURE THE SUCCESSFUL ACHIEVEMENT OF THE REQUIREMENTS BY THE DEADLINE SPECIFIED. ANY REQUEST FOR AN EXTENSION OF THE DEADLINE SPECIFIED SHALL BE ACCOMPANIED WITH AN EXPLANATION AND SUBMITTED TO PASCO COUNTY AND TO THE DISTRICT FOR EVALUATION.

2) DENSITY OF SURVIVING PLANT SPECIES IN THE AREA EQUALS OR EXCEEDS THOSE REFERENCED IN THE APPROVED ENVIRONMENTAL MANAGEMENT PLAN.

3) COVERAGE BY NUISANCE OR EXOTIC SPECIES AND BAHIA GRASS DOES NOT EXCEED 5 PERCENT. THE AREA MAY BE RELEASED FROM MONITORING AND REPORTING REQUIREMENTS AND BE DEEMED SUCCESSFUL AT ANY TIME DURING THE MONITORING PERIOD IF THE PERMITTEE DEMONSTRATES THAT THE CONDITIONS WITHIN THE FLATWOODS RESTORATION AREA ARE SUSTAINABLE.

WETLAND CREATION NOTES

WETLAND SUCCESS CRITERIA

THE AREA IS TO ACHIEVE VIABLE, SUSTAINABLE ECOLOGICAL AND HYDROLOGICAL WETLAND FUNCTIONS. WETLANDS CONSTRUCTED WILL BE CONSIDERED SUCCESSFUL AND WILL BE RELEASED FROM MONITORING AND REPORTING REQUIREMENTS WHEN THE FOLLOWING CRITERIA ARE MET CONTINUOUSLY FOR A PERIOD OF AT LEAST ONE YEAR WITHOUT INTERVENTION IN THE FORM OF IRRIGATION OR THE ADDITION OR REMOVAL OF VEGETATION.

1) THE AREA CAN BE REASONABLY EXPECTED TO DEVELOP INTO A PALUSTRINE EMERGENT WETLAND AS DETERMINED BY THE USFWS CLASSIFICATION OF WETLANDS AND DEEPWATER HABITATS OF THE UNITES STATES.

2) TOPOGRAPHY, WATER DEPTH AND WATER LEVEL FLUCTUATION IN THE AREA ARE CHARACTERISTIC OF THE WETLAND/SURFACE WATER TYPE SPECIFIED IN CRITERION ABOVE.

3) THE DOMINANT AND SUBDOMINANT SPECIES OF DESIRABLE WETLAND PLANTS COMPRISING EACH VEGETATION ZONE AND STRATUM OF THE AREA SHALL BE AS FOLLOWS:

ZONE	STRATUM	PERCENT COVER	[1]DOMINANT SPECIES	[1]SUBDOMINANT SPECIES
A	GROUNDCOVER	85%	SAND CORDGRASS SAND WEED	MAIDENCANE
B	GROUNDCOVER	85%	SOFT RUSH MAIDENCANE	LYCOPUS RUBELLUS
C	GROUNDCOVER	85%	SOFT RUSH ARROW HEAD	SPIKE RUSH LUDWIDGIA REPENS

[1]PLANT SPECIES PROVIDING THE SAME FUNCTION AS THOSE LISTED MAY ALSO BE CONSIDERED IN DETERMINING SUCCESS.

THIS CRITERION MUST BE ACHIEVED WITHIN FIVE YEARS OF CONSTRUCTION. THE PERMITTEE SHALL COMPLETE ANY ACTIVITIES NECESSARY TO ENSURE THE SUCCESSFUL ACHIEVEMENT OF THE MITIGATION REQUIREMENTS BY THE DEADLINE SPECIFIED. ANY REQUEST FOR AN EXTENSION OF THE DEADLINE SPECIFIED SHALL BE ACCOMPANIED WITH AN EXPLANATION AND SUBMITTED TO PASCO COUNTY AND TO THE DISTRICT FOR EVALUATION.

4) SPECIES COMPOSITION OF RECRUITING WETLAND VEGETATION ARE INDICATIVE OF THE WETLAND TYPE SPECIFIED IN CRITERION ABOVE.

5) DENSITY OF SURVIVING PLANT SPECIES IN THE AREA EQUALS OR EXCEEDS 2000/ACRE.

6) COVERAGE BY NUISANCE OR EXOTIC SPECIES DOES NOT EXCEED 5 PERCENT.

7) THE WETLAND AREA CAN BE DETERMINED TO BE A WETLAND OR OTHER SURFACE WATER ACCORDING TO CHAPTER 62-340, F.A.C. THE AREA MAY BE RELEASED FROM MONITORING AND REPORTING REQUIREMENTS AND BE DEEMED SUCCESSFUL AT ANY TIME DURING THE MONITORING PERIOD IF THE PERMITTEE DEMONSTRATES THAT THE CONDITIONS WITHIN THE WETLAND CREATION AREA ARE SUSTAINABLE.

UPLAND BUFFER ENHANCEMENT NOTES

1. PLACE SILT FENCE WHERE INDICATED – SILT FENCE IS TO BE STAKED OR FLAGGED PRIOR TO INSTALLATION.
2. REMOVE EXISTING EXOTIC AND NUISANCE VEGETATION FROM PROPOSED MITIGATION AREA.
3. PLANT MITIGATION AREA AS SHOWN ON PLANS.
4. CONTRACTOR SHALL WATER PLANTINGS AS REQUIRED UNTIL ESTABLISHED (30 DAYS MIN.)
5. CONTRACTOR SHALL GUARANTEED 85% SUCCESS RATE FOR 60 DAYS. DEAD OR UNHEALTHY PLANTS SHALL BE REMOVED AND REPLACED.
6. ALL PLANTING MATERIAL SHOULD BE FLORIDA GRADE 1 OR BETTER. IN ADDITION, ALL PLANTING MATERIAL SHOULD BE PURCHASED FROM A REGISTERED NURSERY IN THE SAME GEOGRAPHIC AREA AS THE PROPOSED MITIGATION AREA.
7. PLANTS WILL BE INSTALLED IN NATURALISTIC CLUSTERS AT THE CONTRACTOR'S DISCRETION.

MONITORING AND MAINTENANCE:

A MONITORING AND MAINTENANCE PROGRAM WILL BE INITIATED UPON COMPLETION OF PLANT INSTALLATION. PURSUANT TO SPECIFIC CONDITIONS OF THE APPROVED PERMITS, MONITORING AND MAINTENANCE OF THE AREA WILL BE CONDUCTED BETWEEN MARCH 1 AND NOVEMBER 30 OF EACH YEAR. MONITORING REPORTS WILL BE SUBMITTED TO PASCO COUNTY AND SWFWMD WITHIN 30 DAYS OF THE PERFORMANCE OF THE MONITORING EVENT. MONITORING REPORTS WILL PROVIDE PHOTOGRAPHIC DOCUMENTATION OF THE MITIGATION AREA FROM FIXED REFERENCE POINTS AND WILL DISCUSS THE SURVIVAL RATES OF PLANTED VEGETATION AND PROVIDE ESTIMATES OF NUISANCE SPECIES COVERAGES. THE MONITORING REPORTS WILL ALSO INCLUDE A DESCRIPTION OF ALL MAINTENANCE EFFORTS WHICH WILL BE CONDUCTED IN TANDEM WITH EACH MONITORING EVENT.

UPLAND BUFFER SUCCESS CRITERIA

AREA IS EXPECTED TO ACHIEVE VIABLE, SUSTAINABLE UPLAND BUFFER FUNCTIONS. UPLAND BUFFER ENHANCEMENT WILL BE CONSIDERED SUCCESSFUL AND WILL BE RELEASED FROM MONITORING AND REPORTING REQUIREMENTS WHEN THE FOLLOWING CRITERIA ARE MET CONTINUOUSLY FOR A PERIOD OF AT LEAST ONE YEAR WITHOUT INTERVENTION IN THE FORM OF IRRIGATION OR THE ADDITION OR REMOVAL OF VEGETATION.

1) THE DOMINANT AND SUBDOMINANT SPECIES OF DESIRABLE UPLAND BUFFER PLANTS COMPRISING EACH VEGETATION ZONE AND STRATUM OF THE MITIGATION AREA SHALL BE AS FOLLOWS:

ZONE	STRATUM	PERCENT COVER	[1]DOMINANT SPECIES	[1]SUBDOMINANT SPECIES
UPLAND BUFFER	CANOPY	30%		
	SUB-CANOPY	30%		
	GROUNDCOVER	70%		

[1]PLANT SPECIES PROVIDING THE SAME FUNCTION AS THOSE LISTED MAY ALSO BE CONSIDERED IN DETERMINING SUCCESS.

THIS CRITERION MUST BE ACHIEVED WITHIN FIVE YEARS OF RESTORATION. THE PERMITTEE SHALL COMPLETE ANY ACTIVITIES NECESSARY TO ENSURE THE SUCCESSFUL ACHIEVEMENT OF THE REQUIREMENTS BY THE DEADLINE SPECIFIED. ANY REQUEST FOR AN EXTENSION OF THE DEADLINE SPECIFIED SHALL BE ACCOMPANIED WITH AN EXPLANATION AND SUBMITTED TO PASCO COUNTY FOR EVALUATION.

2) DENSITY OF SURVIVING PLANT SPECIES EQUALS OR EXCEEDS THOSE REFERENCED IN THE ENVIRONMENTAL MANAGEMENT PLAN.

3) COVERAGE BY NUISANCE OR EXOTIC SPECIES DOES NOT EXCEED 5 PERCENT.

THE AREA MAY BE RELEASED FROM MONITORING AND REPORTING REQUIREMENTS AND BE DEEMED SUCCESSFUL AT ANY TIME DURING THE MONITORING PERIOD IF THE PERMITTEE DEMONSTRATES THAT THE CONDITIONS WITHIN THE UPLAND BUFFER ENHANCEMENT AREA ARE SUSTAINABLE.

PAUL E. SKIDMORE LICENSE NO. 39631 STATE OF FLORIDA PROFESSIONAL ENGINEER

JOB NO. 506-100F | EPN 213 | DATE 10-1-2015 | DESIGNED RAH | DRAWN RAH | CHECKED PES | Q.C.

REVISIONS: NO. | DATE | APP'D BY

DESIGNED FOR: **ASTURIA COMMUNITY DEVELOPMENT DISTRICT**
605 PALENCIA CLUB DRIVE, ST. AUGUSTINE, FLORIDA 32095
PHONE: (904) 810-0500 - FAX: (904) 810-0525 - E-MAIL: sean.manson@hines.com

PROJECT NAME: Asturia — PHASE 2

SHEET NAME: **CRITICAL LINKAGE MITIGATION PLAN (2)**

ENGINEER / SURVEYOR: **FLORIDA DESIGN CONSULTANTS, INC.** — THINK IT. ACHIEVE IT. —
3030 STARKEY BOULEVARD, NEW PORT RICHEY, FLORIDA 34655
PHONE: (800) 532 - 1047 FAX: (727) 848 - 3648 WWW.FLDESIGN.COM C.A. NO. 7421
E-MAIL: pskidmore@fldesign.com

PLAN SET DATE: October 7, 2015

©Copyright 2015 Florida Design Consultants, Inc. Drawings and concepts may not be used or reproduced without written permission.

K:\213\ProjData\ConstDocs\Plans\Phase 2\213_ASTURIA-PH2-PMITIGATION-2.dwg – Oct 20, 2015 @ 1:37pm – rhall

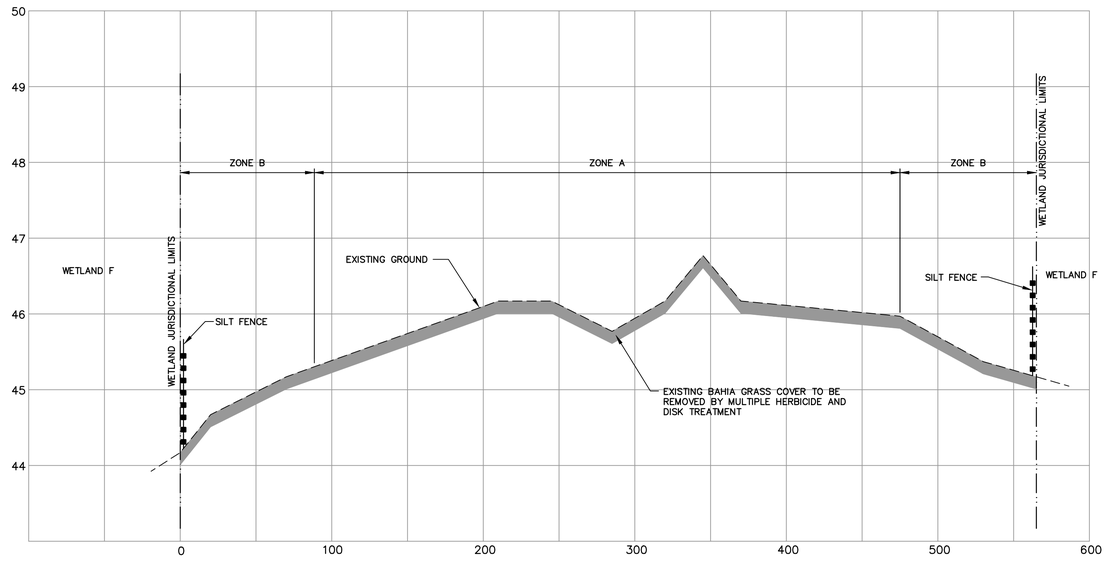

SECTION (A/42)
SCALE: 1"=50' HORIZ., 1"=1' VERT.

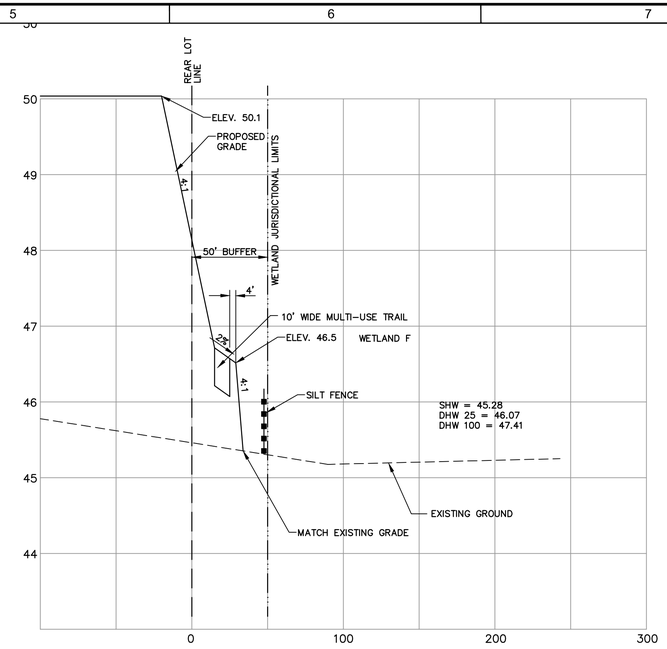

SECTION (B/42)
SCALE: 1"=50' HORIZ., 1"=1' VERT.

FLATWOODS RESTORATION

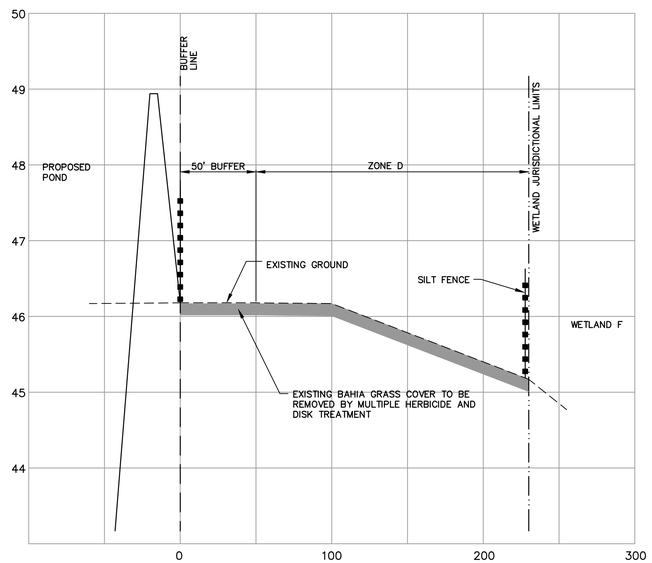

SECTION (C/43)
SCALE: 1"=50' HORIZ., 1"=1' VERT.

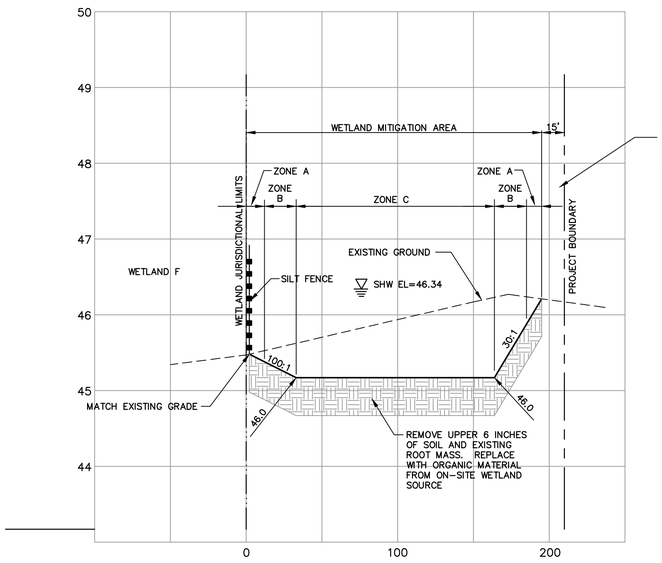

SECTION (D/43)
SCALE: 1"=50' HORIZ., 1"=1' VERT.

UPLAND HARDWOOD ENHANCEMENT

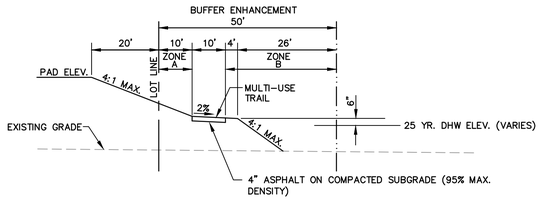

MULTI-USE TRAIL TYPICAL SECTION – 50' BUFFER
NOT TO SCALE

PAUL E. SKIDMORE LICENSE NO. 39631 STATE OF FLORIDA PROFESSIONAL ENGINEER

JOB NO.	EPN	DATE	DESIGNED	DRAWN	CHECKED
506-100F	213	10-1-2015	RAH	RAH	PES

NO.	DATE	REVISIONS

DESIGNED FOR
ASTURIA COMMUNITY DEVELOPMENT DISTRICT
1600 PALMA SOLA BLVD., STE. 101, AUGUSTINE, FLORIDA 32086
PHONE: (904) 810-0500 - FAX: (904) 810-0525 - E-MAIL: sean.mariano@inwest.com

PROJECT NAME: Asturia — PHASE 2

SHEET NAME: **CRITICAL LINKAGE MITIGATION PLAN (3)**

ENGINEER / SURVEYOR
FLORIDA DESIGN CONSULTANTS, INC.
— THINK IT. ACHIEVE IT. —
3030 STARKEY BOULEVARD, NEW PORT RICHEY, FLORIDA 34655
PHONE: (800) 532 - 1047 FAX: (727) 848 - 3648 WWW.FLDESIGN.COM C.A. NO. 7421
E-MAIL: pskidmore@fldesign.com

PLAN SET DATE: October 7, 2015

SHEET 44 OF 52

©Copyright 2015 Florida Design Consultants, Inc. Drawings and concepts may not be used or reproduced without written permission.

K:\213\Proj\Data\CoreDocs\Plans\Phase 2\213_ASTURIA-PH2-PMITIGATION-3-.dwg - Oct 20, 2015 @ 1:38pm - rhall

N

0 25 50 100

BUILDER PROVIDED TREES

SITE TYPICAL LOT SIZE–SF	NUMBER OF LOTS	NUMBER OF TREES REQUIRED BY CODE PER LOT	DIAMETER OF TREES REQUIRED (INCHES)	TOTAL INCHES REQUIRED	MINIMUM HEIGHT OF TREES AT INSTALLATION
3500–6000	0	②	2	0"	6'
6001–7500	80	③	2	480"	6'
7501–9500	60	④	2	480"	6'
9501–16000	17	⑥	2	204"	6'
16001 +	–	⑧	2	–	6'
TOTALS	157	582		1164"	

BUILDER REQUIRED LANDSCAPE WILL BE INSTALLED AT TIME OF LOT DEVELOPMENT. BUILDERS MAY CHOOSE FROM THE FOLLOWING LIST;

ACER RUBRUM	RED MAPLE*
CELTIS LAEVIGATA	SUGARBERRY
CERCIS CANADENSIS	EASTERN REDBUD
CORNUS FLORIDA	FLOWERING DOGWOOD
LIQUIDAMBAR STYRACIFILLA	SWEETGUM
MAGNOLIA GRANDIFLORA	SOUTHERN MAGNOLIA
QUERCUS SHUMARDII	SHUMARD OAK
QUERCUS VIRGINIANA	LIVE OAK*
ULMUS ALATA	WINGED ELM

* NOT TO BE PLANTED BETWEEN SIDEWALK AND CURB

DEVELOPER PROVIDED TREES

SITE AREAS	TOTAL TREES PROVIDED	DIAMETER OF TREES REQUIRED (INCHES)	TOTAL INCHES PROVIDED	MINIMUM HEIGHT OF TREES AT INSTALLATION
PONDS				
EXISTING	0	2	0"	6'
PROPOSED	0*	2	0"	6'
TYPE D BUFFER	0**	2	0"	6'
PARK / COMMON	100***	2	0"	6'
ADDN'L COMMON **	0	2	0"	6'
TOTALS	100		200"	

* NO PONDS ARE VISIBLE FROM A PUBLIC RIGHT–OF–WAY.
** NO BUFFER IS REQUIRED THROUGHOUT THE PROJECT
*** ALL PROPOSED DEVELOPER LANDSCAPE SHOWN ON THE PLAN FOR IS FOR INFORMATION PURPOSES ONLY, NO LANDSCAPE IS REQUIRED FOR STREET OR PARKS AS PER LDC SEC 902.5.

NO TREES AT OR ABOVE 10" DBH WHERE REMOVED

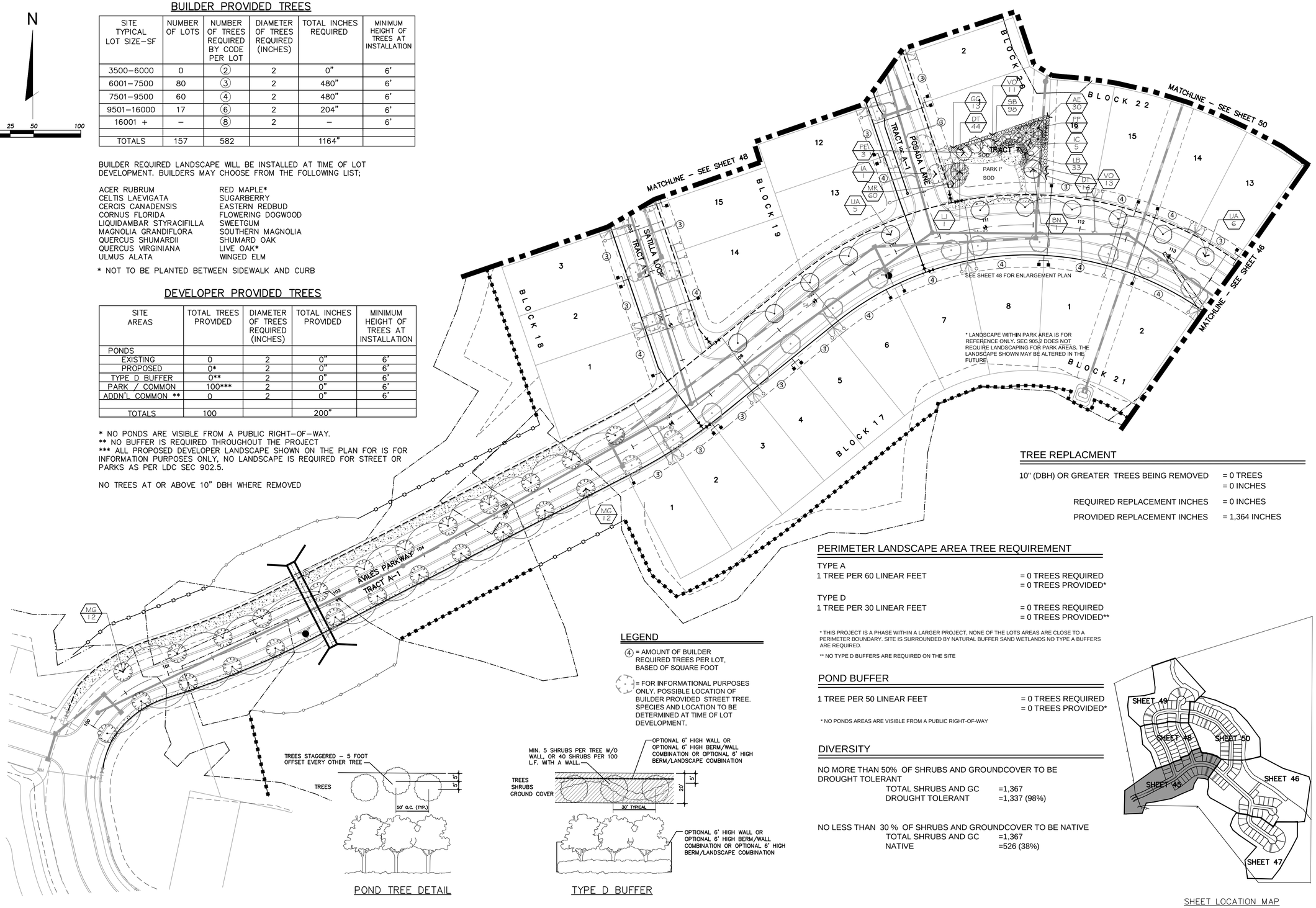

TREE REPLACMENT

10" (DBH) OR GREATER TREES BEING REMOVED	= 0 TREES = 0 INCHES
REQUIRED REPLACEMENT INCHES	= 0 INCHES
PROVIDED REPLACEMENT INCHES	= 1,364 INCHES

PERIMETER LANDSCAPE AREA TREE REQUIREMENT

TYPE A
1 TREE PER 60 LINEAR FEET = 0 TREES REQUIRED
= 0 TREES PROVIDED*

TYPE D
1 TREE PER 30 LINEAR FEET = 0 TREES REQUIRED
= 0 TREES PROVIDED**

* THIS PROJECT IS A PHASE WITHIN A LARGER PROJECT, NONE OF THE LOTS AREAS ARE CLOSE TO A PERIMETER BOUNDARY. SITE IS SURROUNDED BY NATURAL BUFFER SAND WETLANDS NO TYPE A BUFFERS ARE REQUIRED.

** NO TYPE D BUFFERS ARE REQUIRED ON THE SITE

POND BUFFER

1 TREE PER 50 LINEAR FEET = 0 TREES REQUIRED
= 0 TREES PROVIDED*

* NO PONDS AREAS ARE VISIBLE FROM A PUBLIC RIGHT-OF-WAY

DIVERSITY

NO MORE THAN 50% OF SHRUBS AND GROUNDCOVER TO BE DROUGHT TOLERANT
TOTAL SHRUBS AND GC =1,367
DROUGHT TOLERANT =1,337 (98%)

NO LESS THAN 30 % OF SHRUBS AND GROUNDCOVER TO BE NATIVE
TOTAL SHRUBS AND GC =1,367
NATIVE =526 (38%)

LEGEND

④ = AMOUNT OF BUILDER REQUIRED TREES PER LOT, BASED OF SQUARE FOOT

= FOR INFORMATIONAL PURPOSES ONLY. POSSIBLE LOCATION OF BUILDER PROVIDED STREET TREE. SPECIES AND LOCATION TO BE DETERMINED AT TIME OF LOT DEVELOPMENT.

POND TREE DETAIL

TYPE D BUFFER

SHEET LOCATION MAP

ROBERT E. HAUGHT
REGISTERED LANDSCAPE ARCHITECT # 6668915

JOB NO	EPN	DATE	DESIGNED	DRAWN	CHECKED
506-100F	213	10-1-2015	RAH	RAH	PES

REVISIONS

NO.	DATE	BY

DESIGNED FOR
ASTURIA COMMUNITY DEVELOPMENT DISTRICT
6551 PALENCIA CLUB DRIVE, ST. AUGUSTINE, FLORIDA 32095
PHONE: (904) 810-0500 - FAX: (904) 810-0525 - E-MAIL: sean.mancuso@fishers.com

PROJECT NAME
Asturia | PHASE 2

SHEET NAME
LANDSCAPING PLANS

ENGINEER / SURVEYOR

FLORIDA DESIGN CONSULTANTS, INC.
THINK IT. ACHIEVE IT.
3030 STARKEY BOULEVARD, NEW PORT RICHEY, FLORIDA 34655
PHONE: (800) 532 - 1047 FAX: (727) 848 - 3648 WWW.FLDESIGN.COM C.A. NO. 7421
E-MAIL pskinnon@fldesign.com

PLAN SET DATE
October 7, 2015

SHEET
45 OF 52

© Copyright 2015 Florida Design Consultants, Inc. Drawings and concepts may not be used or reproduced without written permission.

K:\213\Pre-Plat\Construction\Plans\Phase 2\213_ASTURIA-Ph2-PLSP-1.dwg - Oct 20, 2015 @ 1:07pm - rhaught

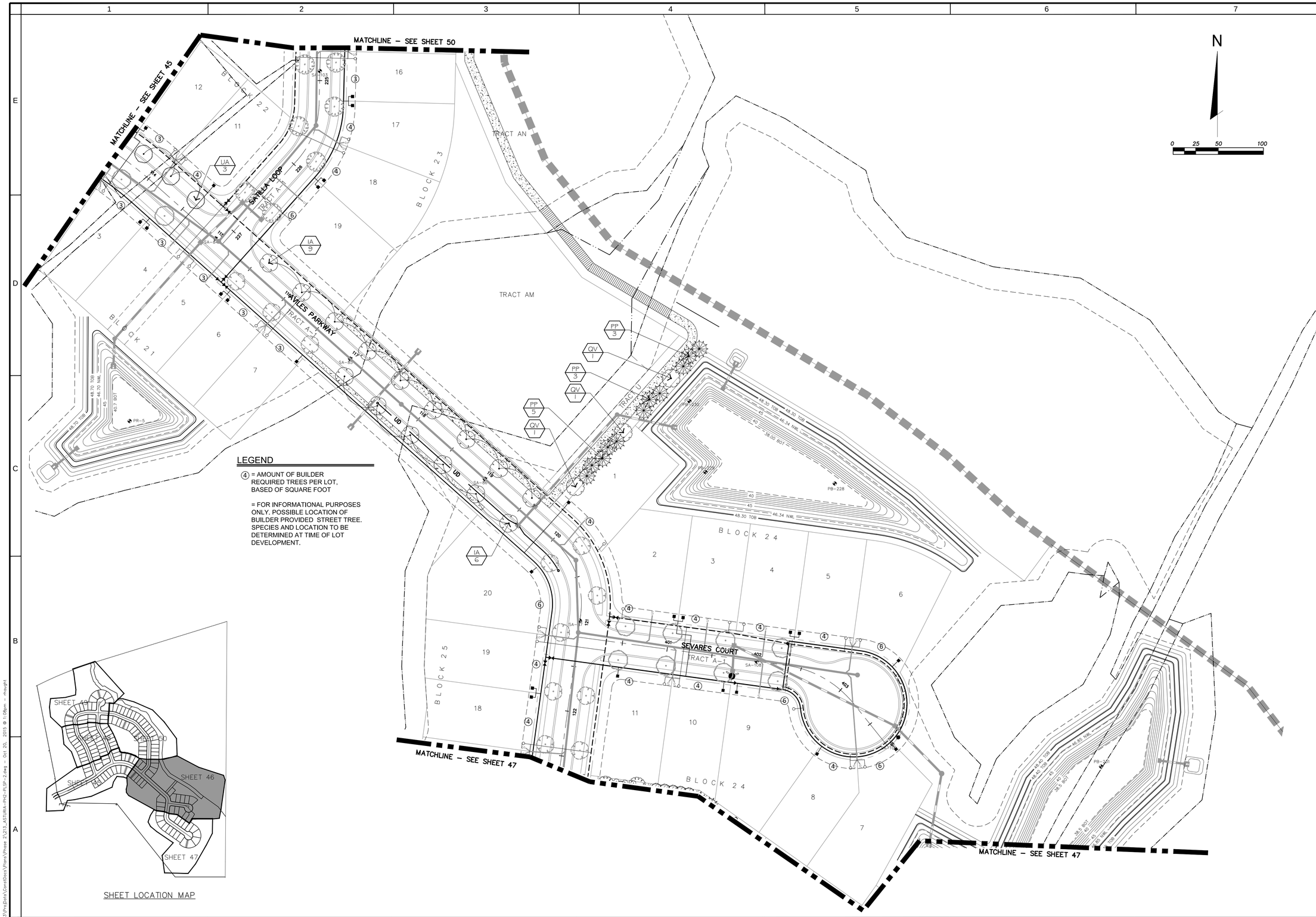

LEGEND

④ = AMOUNT OF BUILDER REQUIRED TREES PER LOT, BASED OF SQUARE FOOT

= FOR INFORMATIONAL PURPOSES ONLY. POSSIBLE LOCATION OF BUILDER PROVIDED STREET TREE. SPECIES AND LOCATION TO BE DETERMINED AT TIME OF LOT DEVELOPMENT.

SHEET LOCATION MAP

ROBERT E. HAUGHT
REGISTERED LANDSCAPE ARCHITECT # 6666815

JOB NO.	EPN	DATE	DESIGNED	DRAWN	Q.C.	APP'D BY
506-100F	213	10-1-2015	RAH	RAH	PES	

NO.	DATE	REVISIONS

DESIGNED FOR
ASTURIA COMMUNITY DEVELOPMENT DISTRICT
605 PALENCIA CLUB DRIVE, ST. AUGUSTINE, FLORIDA 32095
PHONE: (904) 810-0500 - FAX: (904) 810-0525 - E-MAIL: sean.manson@hines.com

PROJECT NAME: Asturia

PHASE 2

SHEET NAME: LANDSCAPING PLANS

ENGINEER / SURVEYOR
FLORIDA DESIGN CONSULTANTS, INC.
THINK IT. ACHIEVE IT.
3030 STARKEY BOULEVARD, NEW PORT RICHEY, FLORIDA 34655
PHONE: (800) 532 - 1047 FAX: (727) 848 - 3648 WWW.FLDESIGN.COM C.A. NO. 7421
E-MAIL: pskidmore@fldesign.com

PLAN SET DATE
October 7, 2015

SHEET 46 OF 52

©Copyright 2015 Florida Design Consultants, Inc. Drawings and concepts may not be used or reproduced without written permission.

K:\213\ProjData\ConstDocs\Plans\Phase 2\213_ASTURIA-PH2-PLSP-2.dwg – Oct 20, 2015 @ 1:08pm – rhaught

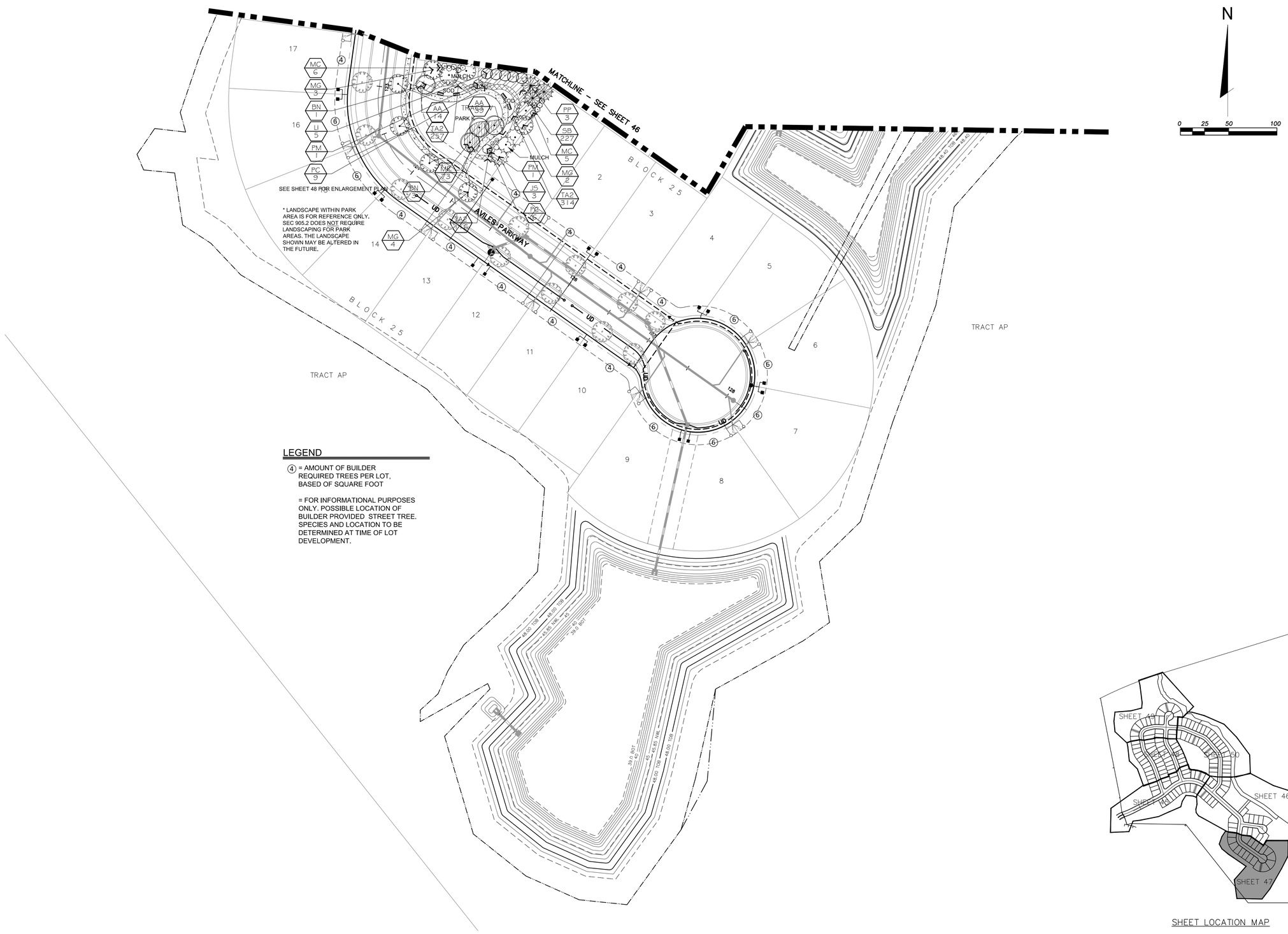

LEGEND

(4) = AMOUNT OF BUILDER REQUIRED TREES PER LOT, BASED OF SQUARE FOOT

= FOR INFORMATIONAL PURPOSES ONLY. POSSIBLE LOCATION OF BUILDER PROVIDED STREET TREE. SPECIES AND LOCATION TO BE DETERMINED AT TIME OF LOT DEVELOPMENT.

SHEET LOCATION MAP

ROBERT E. HAUGHT
REGISTERED LANDSCAPE ARCHITECT # 6666815

JOB NO.	EPN	DATE	DESIGNED	DRAWN	CHECKED	Q.C.	APP'D BY
506-100F	213	10-1-2015	RAH	RAH	PES		

NO.	DATE	REVISIONS

DESIGNED FOR
ASTURIA COMMUNITY DEVELOPMENT DISTRICT
605 PALENCIA CLUB DRIVE, ST. AUGUSTINE, FLORIDA 32095
PHONE: (904) 810-0500 - FAX: (904) 810-0525 - E-MAIL: sean.manson@hines.com

PROJECT NAME: Asturia | PHASE 2

SHEET NAME: LANDSCAPING PLANS

ENGINEER / SURVEYOR
FLORIDA DESIGN CONSULTANTS, INC.
— THINK IT. ACHIEVE IT. —
3030 STARKEY BOULEVARD, NEW PORT RICHEY, FLORIDA 34655
PHONE: (800) 532 - 1047 FAX: (727) 848 - 3648 WWW.FLDESIGN.COM C.A. NO. 7421
E-MAIL: pskidmore@fldesign.com

PLAN SET DATE
October 7, 2015

SHEET 47 OF 52

©Copyright 2015 Florida Design Consultants, Inc. Drawings and concepts may not be used or reproduced without written permission.

K:\213\ProData\ConstDocs\Plans\Phase 2\213_ASTURIA-PH2-PLSP-3.dwg – Oct 20, 2015 @ 1:08pm – rhaught

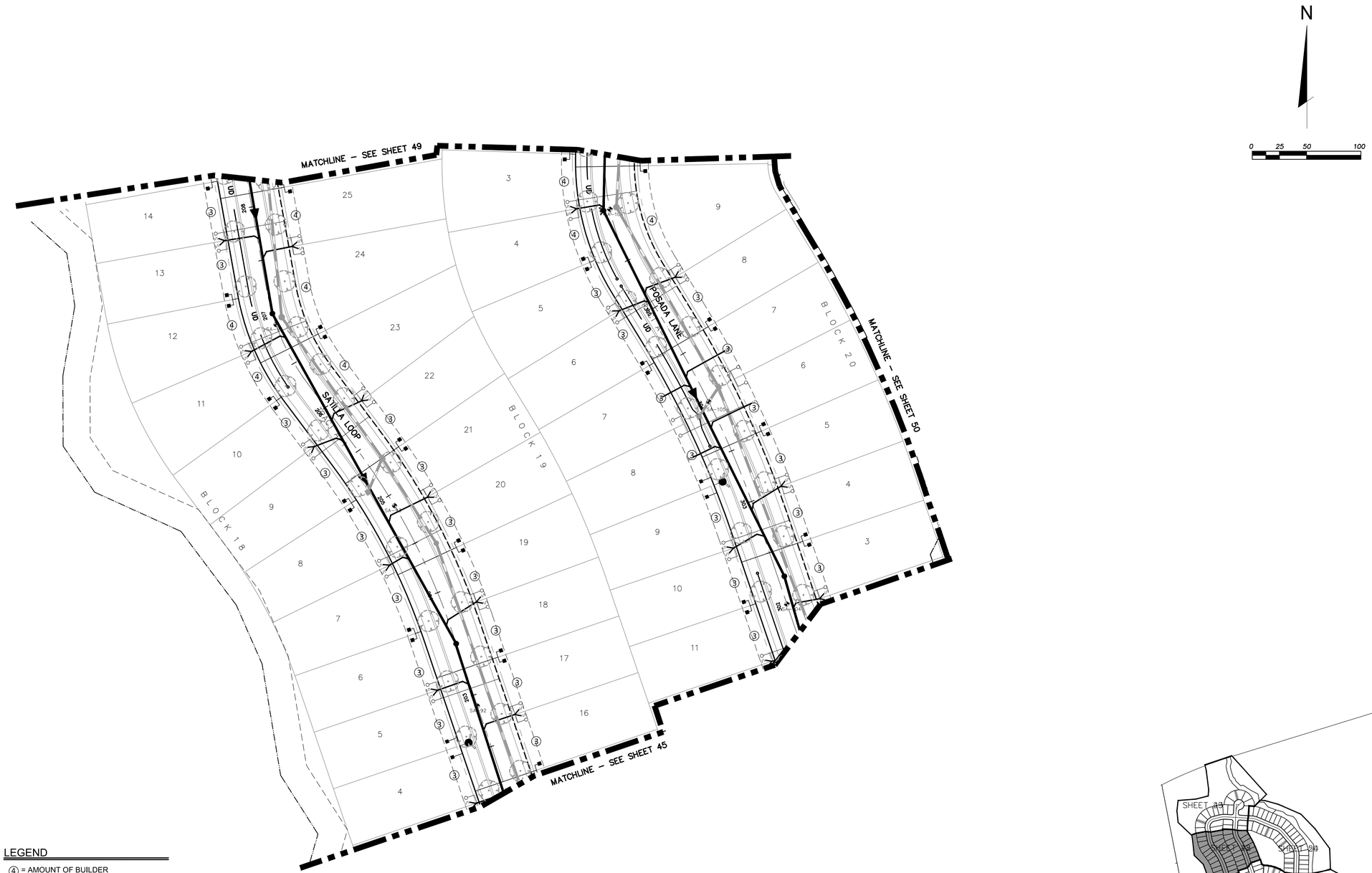

LEGEND

④ = AMOUNT OF BUILDER REQUIRED TREES PER LOT, BASED OF SQUARE FOOT

= FOR INFORMATIONAL PURPOSES ONLY. POSSIBLE LOCATION OF BUILDER PROVIDED STREET TREE. SPECIES AND LOCATION TO BE DETERMINED AT TIME OF LOT DEVELOPMENT.

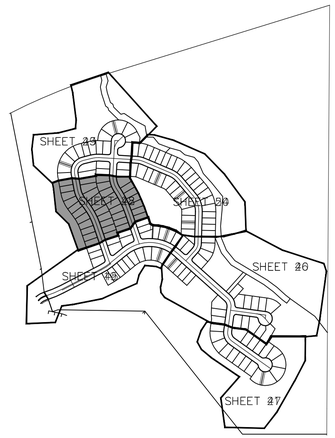

SHEET LOCATION MAP

ROBERT E. HAUGHT
REGISTERED LANDSCAPE
ARCHITECT # 6666815

JOB NO.	506-100F
EPN	213
DATE	10-1-2015
DESIGNED	RAH
DRAWN	RAH
CHECKED	PES
Q.C.	
APP'D BY	

NO.	DATE	REVISIONS

DESIGNED FOR
ASTURIA COMMUNITY DEVELOPMENT DISTRICT
605 PALENCIA CLUB DRIVE, ST. AUGUSTINE, FLORIDA 32095
PHONE: (904) 810-0500 - FAX: (904) 810-0525 - E-MAIL: sean.manson@hines.com

PROJECT NAME: Asturia

PHASE 2

SHEET NAME: LANDSCAPING PLANS

ENGINEER / SURVEYOR
FLORIDA DESIGN CONSULTANTS, INC.
THINK IT. ACHIEVE IT.
3030 STARKEY BOULEVARD, NEW PORT RICHEY, FLORIDA 34655
PHONE: (800) 532 - 1047 FAX: (727) 848 - 3648 WWW.FLDESIGN.COM C.A. NO. 7421
E-MAIL: pskidmore@fldesign.com

PLAN SET DATE
October 7, 2015

SHEET 48 OF 52

©Copyright 2015 Florida Design Consultants, Inc. Drawings and concepts may not be used or reproduced without written permission.

K:\213\ProjData\ConstDocs\Plans\Phase 2\213_ASTURIA-PH2-PLSP-4.dwg – Oct 20, 2015 @ 1:09pm – rhaught

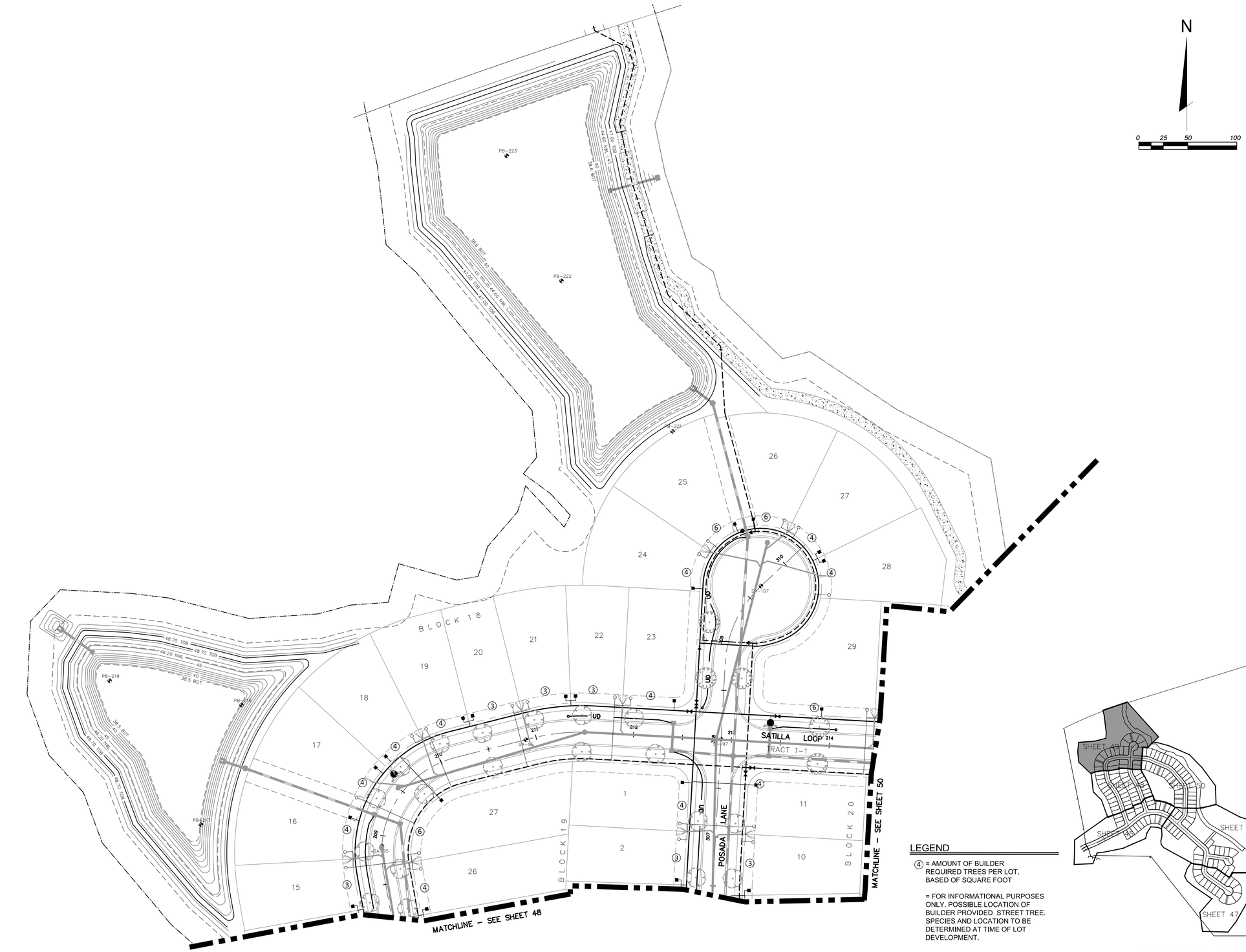

ROBERT E. HAUGHT
REGISTERED LANDSCAPE ARCHITECT # 6668915

JOB NO.	506-100F
EPN	213
DATE	10-1-2015
DESIGNED	RAH
DRAWN	RAH
CHECKED	PES
QC.	

NO.	DATE	REVISIONS

DESIGNED FOR
ASTURIA COMMUNITY DEVELOPMENT DISTRICT
650 PALISADA CLUB DRIVE, ST. AUGUSTINE, FLORIDA 32095
PHONE: (904) 810-0500 - FAX: (904) 810-0525 - E-MAIL: sean.mancuso@thwes.com

PROJECT NAME
Asturia
PHASE 2

SHEET NAME
LANDSCAPING PLANS

ENGINEER / SURVEYOR

FLORIDA DESIGN CONSULTANTS, INC.
— THINK IT. ACHIEVE IT. —
3030 STARKEY BOULEVARD, NEW PORT RICHEY, FLORIDA 34655
PHONE: (800) 532-1047 FAX: (727) 848-3648 WWW.FLDESIGN.COM C.A. NO. 7421
E-MAIL: pskidmore@fldesign.com

PLAN SET DATE
October 7, 2015

SHEET 49 OF 52

©Copyright 2015 Florida Design Consultants, Inc. Drawings and concepts may not be used or reproduced without written permission.

K:\213\Projects\Construction\Plans\Phase 2\213_ASTURIA-PH2-PLSP-5.dwg – Oct 20, 2015 @ 1:09pm – rhought

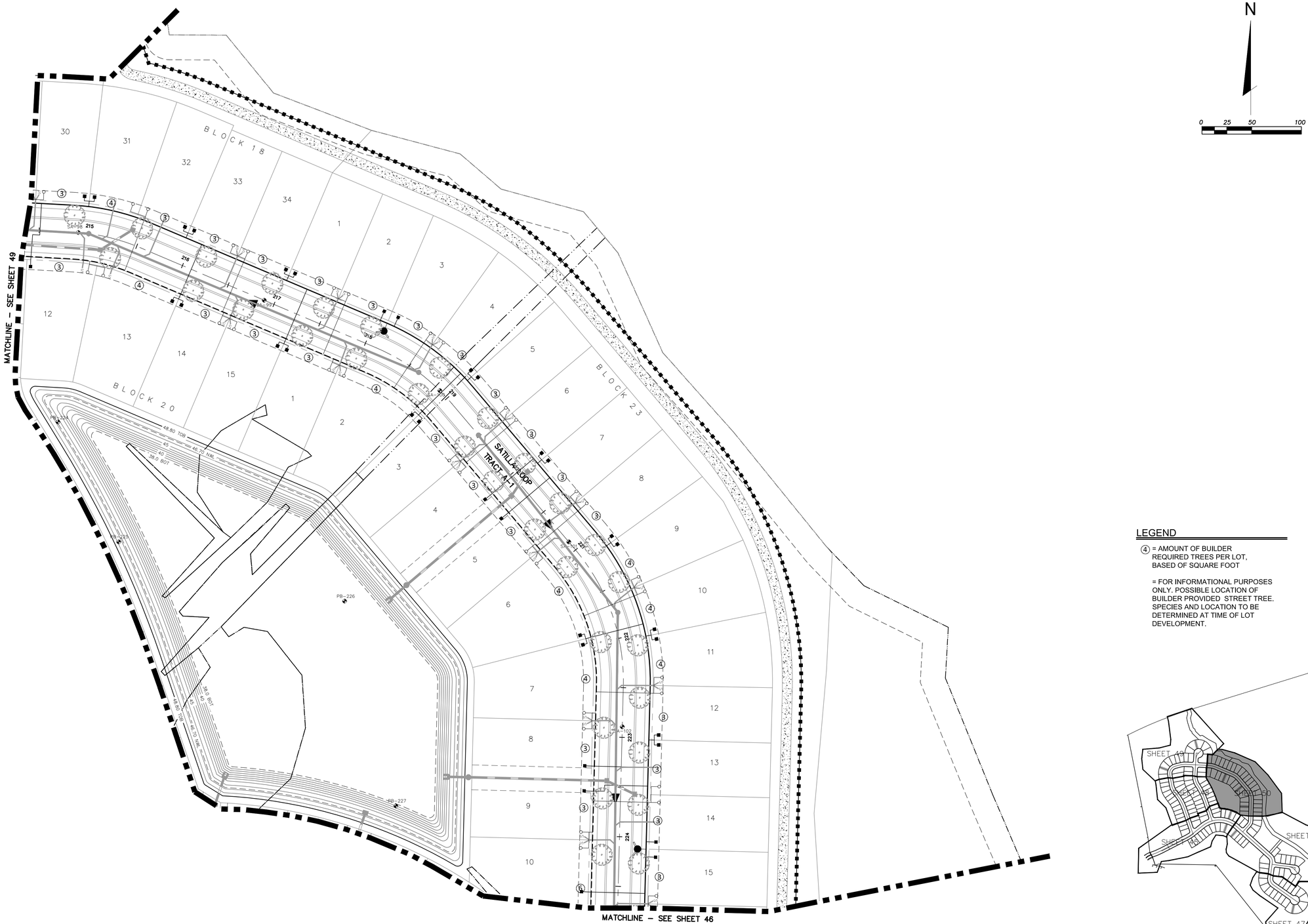

LEGEND

④ = AMOUNT OF BUILDER REQUIRED TREES PER LOT, BASED OF SQUARE FOOT

= FOR INFORMATIONAL PURPOSES ONLY. POSSIBLE LOCATION OF BUILDER PROVIDED STREET TREE. SPECIES AND LOCATION TO BE DETERMINED AT TIME OF LOT DEVELOPMENT.

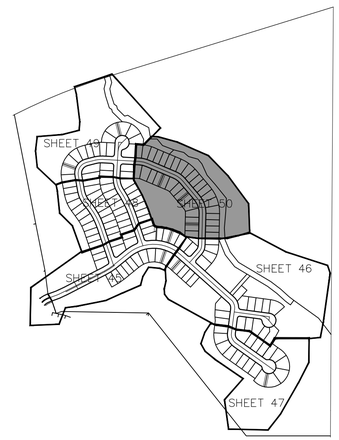

SHEET LOCATION MAP

ROBERT E. HAUGHT
REGISTERED LANDSCAPE ARCHITECT # 6666815

JOB NO.	EPN	DATE	DESIGNED	DRAWN	CHECKED	Q.C.	APP'D BY
506-100F	213	10-1-2015	RAH	RAH	PES		

NO.	DATE	REVISIONS

DESIGNED FOR
ASTURIA COMMUNITY DEVELOPMENT DISTRICT
605 PALENCIA CLUB DRIVE, ST. AUGUSTINE, FLORIDA 32095
PHONE: (904) 810-0500 - FAX: (904) 810-0525 - E-MAIL: sean.manson@hines.com

PROJECT NAME: Asturia | PHASE 2

SHEET NAME: LANDSCAPING PLANS

ENGINEER / SURVEYOR
FLORIDA DESIGN CONSULTANTS, INC.
— THINK IT. ACHIEVE IT. —
3030 STARKEY BOULEVARD, NEW PORT RICHEY, FLORIDA 34655
PHONE: (800) 532 - 1047 FAX: (727) 848 - 3648 WWW.FLDESIGN.COM C.A. NO. 7421
E-MAIL: pskidmore@fldesign.com

PLAN SET DATE
October 7, 2015

SHEET 50 OF 52

©Copyright 2015 Florida Design Consultants, Inc. Drawings and concepts may not be used or reproduced without written permission.

K:\213\ProData\ConstDocs\Plans\Phase 2\213_ASTURIA-PH2-PLSP-6.dwg – Oct 20, 2015 @ 1:09pm – rhaught

PLANT SCHEDULE

CONIFERS	QTY	BOTANICAL NAME / COMMON NAME	CONT	CAL	SIZE	NATIVE	DROUGHT TOL.	
PE	3	PINUS ELLIOTTI / SLASH PINE	30 GAL	2"CAL	10' HT	Y	Y	
PP	17	PINUS PALUSTRIS / LONGLEAF PINE	30 GAL	2"CAL	10'-12' FG	Y	Y	
DECIDUOUS TREES	QTY	BOTANICAL NAME / COMMON NAME	CONT	CAL	SIZE	NATIVE	DROUGHT TOL.	
BN	5	BETULA NIGRA / RIVER BIRCH MULTI-TRUNK	30 GAL	2"CAL	MIN. 6' HT	Y	Y	
UA	14	ULMUS ALATA / WINGED ELM	30 GAL	2"CAL	8' HT	Y	Y	
EVERGREEN TREES	QTY	BOTANICAL NAME / COMMON NAME	CONT	CAL	SIZE	NATIVE	DROUGHT TOL.	
IC	5	ILEX CASSINE / DAHOON HOLLY	25 GAL	2"CAL	MIN. 8' HT	Y	Y	
IA	16	ILEX X ATTENUATA / EAST PALATKA HOLLY	30 GAL	2"CAL	10-12' HT.	Y	Y	
JS	3	JUNIPERUS SILICICOLA / SOUTHERN RED CEDAR	30 GAL	2"CAL	8' HT	Y	Y	
QV	3	QUERCUS VIRGINIANA 'HIGH RISE' / HIGH RISE LIVE OAK	30 GAL	2"CAL	12' HT	Y	Y	
FLOWERING TREES	QTY	BOTANICAL NAME / COMMON NAME	CONT	CAL	SIZE	NATIVE	DROUGHT TOL.	
LI	5	LAGERSTROEMIA INDICA 'DYNAMITE' / DYNAMITE CRAPE MYRTLE STANDARD TRUNK	15 GAL	2"CAL	6' HT	N	Y	
LJ	1	LIGUSTRUM JAPONICUM / JAPANESE PRIVET	30 GAL	2"CAL	7' HT	N	Y	
MG	33	MAGNOLIA GRANDIFLORA / SOUTHERN MAGNOLIA	30 GAL	2"CAL	10' HT	Y	Y	
PM	2	PODOCARPUS MACROPHYLLUS / YEW PINE	25 GAL		7' HT	N	Y	
SHRUBS	QTY	BOTANICAL NAME / COMMON NAME	SIZE	HEIGHT	SPACE	NATIVE	DROUGHT TOL.	
AE	30	ASPIDISTRA ELATIOR / CAST IRON PLANT	3 GAL	18" HT	AS SHOWN	N	N	
GG	13	GALPHIMIA GLAUCA / THRYALIS	3 GAL	18" HT	AS SHOWN	N	Y	
LB	33	LOROPETALUM CHINENSE RUBRUM 'BURGUNDY' / BURGUNDY LOROPETALUM	3 GAL	18" HT	AS SHOWN	Y	Y	
MC	11	MYRICA CERIFERA / WAX MYRTLE	7 GAL	36" HT	AS SHOWN	Y	Y	
PC	15	PITTOSPORUM TOBIRA 'COMPACTUM' / COMPACT PITTOSPORUM	7 GAL	24" HT	AS SHOWN	N	Y	
VO	24	VIBURNUM OBOVATUM / WALTER'S VIBURNUM	7 GAL	36" HT	AS SHOWN	Y	Y	
GRASSES	QTY	BOTANICAL NAME / COMMON NAME	CONT	SIZE	NATIVE	DROUGHT TOL.		SPACING
MR	133	MUHLENBERGIA CAPILLARIS 'REGAL MIST' TM / MUHLY	3 GAL	24" HT	Y	Y		36" o.c.
GROUND COVERS	QTY	BOTANICAL NAME / COMMON NAME	CONT	NATIVE	DROUGHT TOL.			SPACING
AA	53	AGAPANTHUS AFRICANUS / LILY OF THE NILE	FLAT	N	Y			36" o.c.
DT	58	DIANELLA TASMANICA 'BLUEBERRY' / BLUEBERRY FLAX LILY	3 GAL	N	Y			36" o.c.
SB	325	SPARTINA BAKERI / SAND CORD GRASS	1 GAL	Y	Y			36" o.c.
TA2	687	TRACHELOSPERMUM ASIATICUM 'ASIATIC' / ASIATIC JASMINE	1 GAL	N	Y			12" o.c.

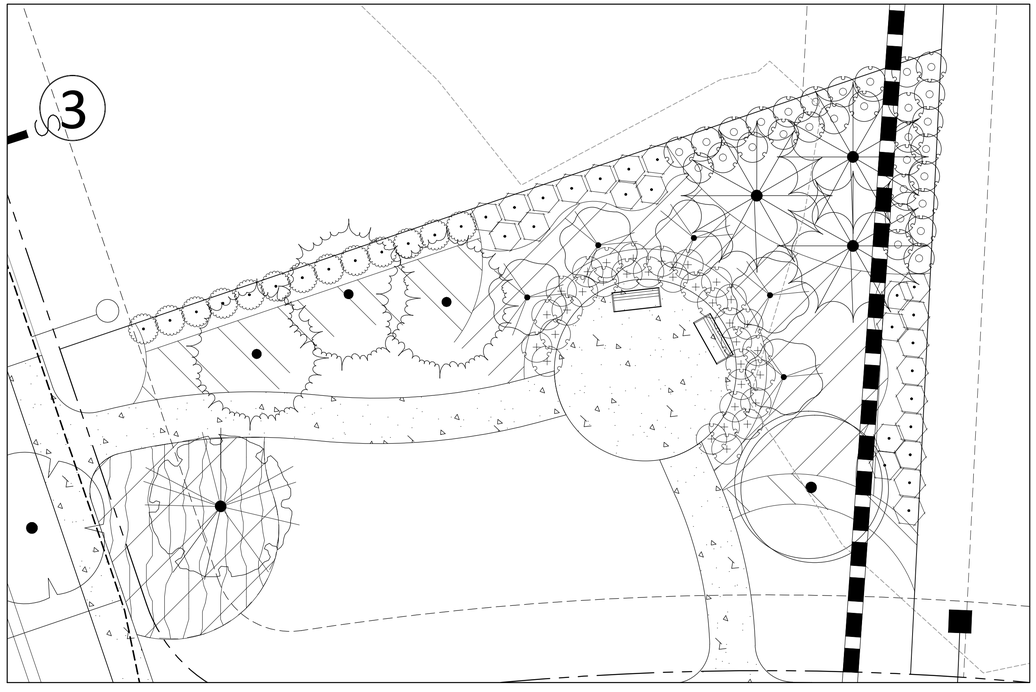

PARK I - ENLARGED VIEW 1"=10'

PARK K- ENLARGED VIEW 1"=20'

ROBERT E. HAUGHT
REGISTERED LANDSCAPE ARCHITECT # 6668915

JOB NO.	506-100F
EPN	213
DATE	10-1-2015
DESIGNED	RAH
DRAWN	RAH
CHECKED	PES
QC.	

NO.	DATE	REVISIONS

DESIGNED FOR
ASTURIA COMMUNITY DEVELOPMENT DISTRICT
250 PALM COAST PARKWAY, SUITE 200
PHONE: (904) 819-0500 - FAX: (904) 819-0525

PROJECT NAME
Asturia

SHEET NAME
LANDSCAPING TREE SCHEDULE

ENGINEER / SURVEYOR

FLORIDA DESIGN CONSULTANTS, INC.
— THINK IT. ACHIEVE IT. —
3030 STARKEY BOULEVARD, NEW PORT RICHEY, FLORIDA 34655
PHONE: (800) 532 - 1047 FAX: (727) 848 - 3648 WWW.FLDESIGN.COM C.A. NO. 7421
E-MAIL: pskilmore@fldesign.com

PHASE 2

PLAN SET DATE
October 7, 2015

SHEET 51 OF 52

©Copyright 2015 Florida Design Consultants, Inc. Drawings and concepts may not be used or reproduced without written permission.

K:\213\Pro Data\CoastDock\Plans\Phase 2\213_AS1IRIA--PH2--RTL5P--1.dwg -- Oct 20, 2015 @ 1:10pm -- rhaught

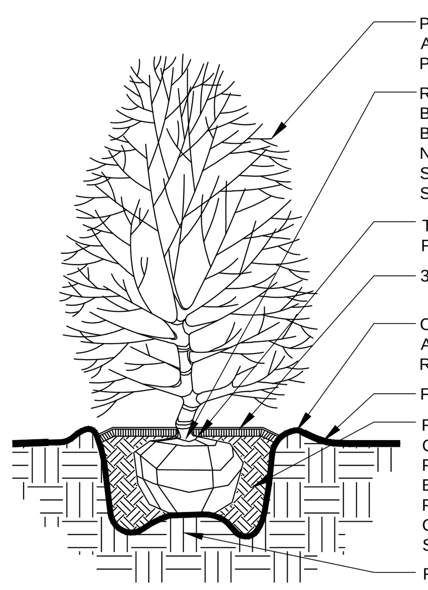

1 TYPICAL SHRUB PIT PLANTING

N.T.S.

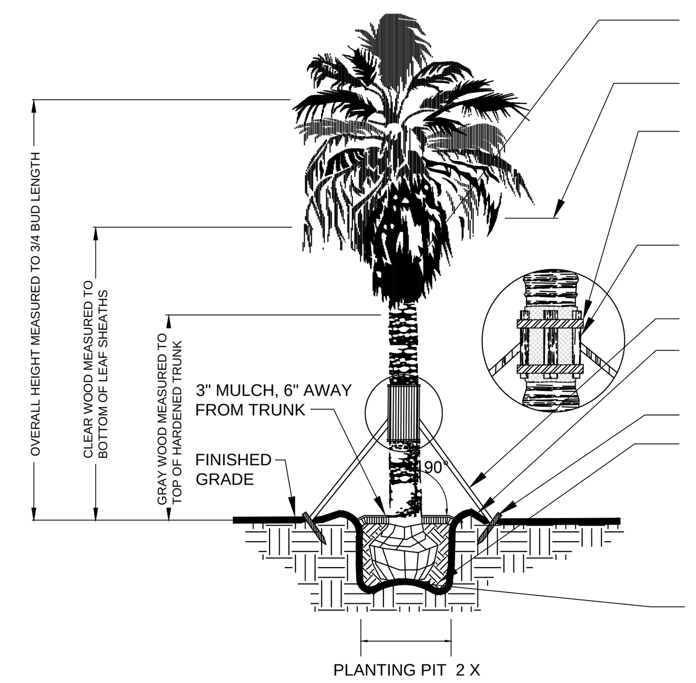

2 TYPICAL PALM TREE PLANTING

N.T.S.

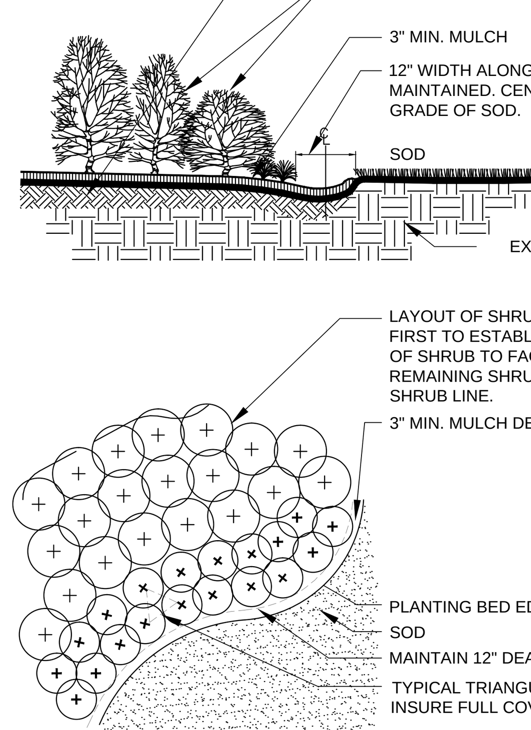

3 TYPICAL SHRUB BED PLANTING

N.T.S.

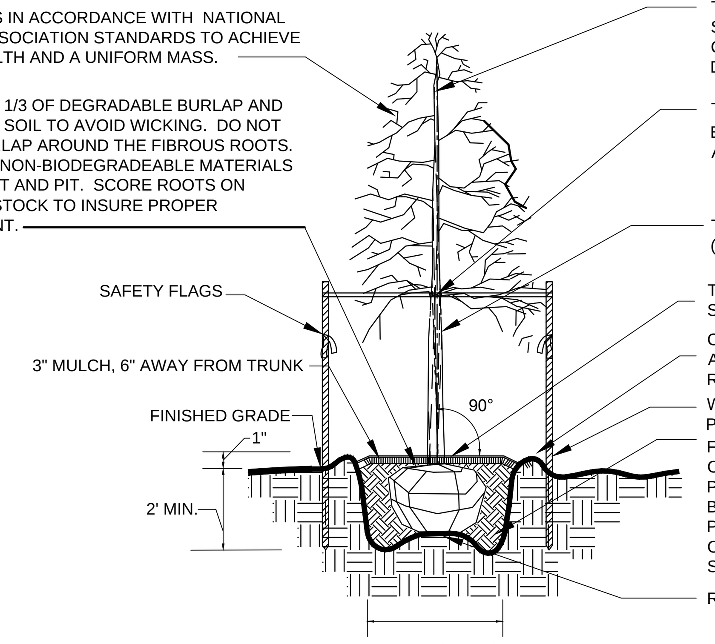

4 TYPICAL SINGLE TRUNK TREE PLANTING FOR TREE WITH A DBH 1" -4 1/2" DBH

N.T.S.

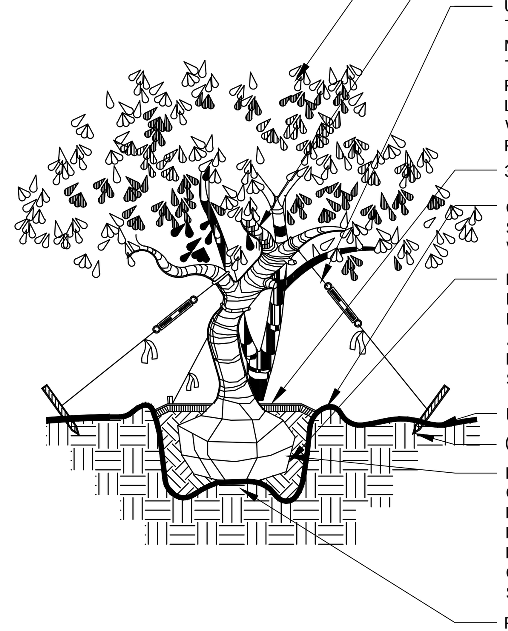

5 TYPICAL MULTI-TRUNK TREE PLANTING

N.T.S.

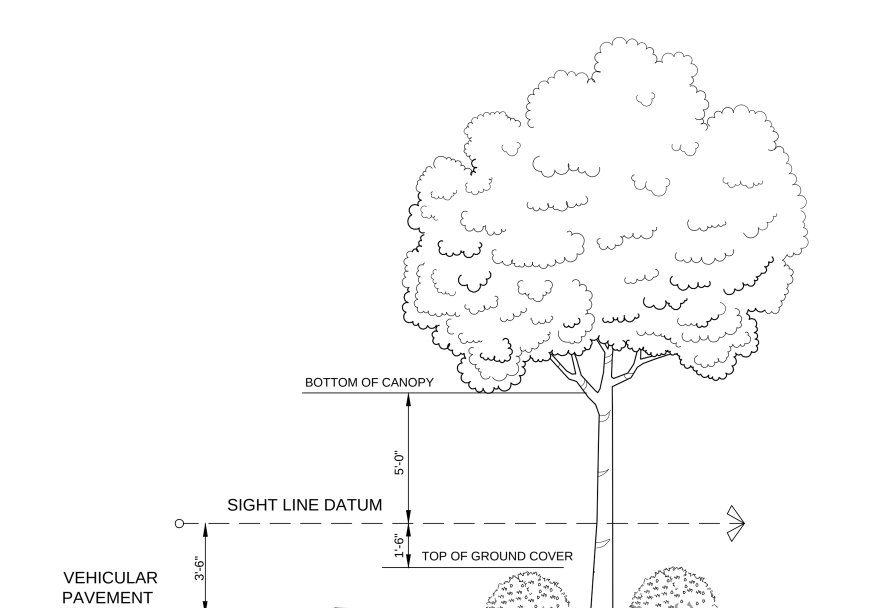

THE INTENT OF THIS STANDARD IS TO PROVIDE A WINDOW WITH VERTICAL LIMITS OF NOT LESS THAN 5'-0" ABOVE AND 1'-6" BELOW THE SIGHT LINE DATUM, AND HORIZONTAL LIMITS DEFINED BY THE LIMITS OF CLEAR SIGHT (FDOT INDEX 546)

6 CLEAR SIGHT WINDOW STANDARD

N.T.S.

SPECIFICATIONS

PLANT MATERIALS: ALL TREES, PALMS, SHRUBS, GROUNDCOVERS, LITTORALS, WATER PLANTS, SOD AND VINES SHALL CONFORM TO THOSE SPECIES AND SIZES INDICATED ON THE DRAWINGS. ALL NURSERY STOCK SHALL BE IN ACCORDANCE WITH GRADES AND STANDARDS FOR NURSERY PLANTS AS DETERMINED BY THE FLORIDA DEPARTMENT OF AGRICULTURE AND CONSUMER SERVICES, UNLESS SPECIFIED OTHERWISE, ALL PLANTS SHALL BE FLORIDA GRADE NUMBER 1 OR BETTER AS DETERMINED BY THE FLORIDA DIVISION OF PLANT INDUSTRY. SPECIMEN MEANS A PLANT THAT IS TRAINED IN ITS DEVELOPMENT TO POSSESS UNQUESTIONABLE AND OUTSTANDINGLY SUPERIOR IN FORM, BRANCHING, COMPACTNESS AND SYMMETRY. TREES FOR PLANTING ROWS SHALL BE UNIFORM IN SIZE AND SHAPE. SINGLE TRUNK TREES SHALL HAVE A STRAIGHT, CENTRAL LEADER. MULTI-TRUNK TREES ARE TO HAVE 3-5 EQUAL SIZED TRUNKS UNLESS OTHERWISE SPECIFIED. PLANTS WITH MARRED OR BURNED TRUNKS WILL NOT BE ACCEPTED. PLANTS SHALL BE PRUNED PRIOR TO DELIVERY ONLY IN ACCORDANCE WITH INTERNATIONAL SOCIETY OF ARBORIST GUIDELINES TO INSURE PROPER HEALTH AND VIGOROUS GROWTH. ALL MATERIALS SHALL BE SUBJECT TO FLORIDA DESIGN CONSULTANTS INC.'S APPROVAL.

BALLED & BURLAPPED: ALL BALLED & BURLAPPED STOCK SHALL BE FRESHLY DUG, SOUND, HEALTHY, VIGOROUS, WELL-BRANCHED, FREE FROM DISEASE AND INSECTS, SECURE IN THE ROOTBALL, AND POSSESS ADEQUATE ROOT SYSTEMS. ALL BURLAP SHALL BE REMOVED FROM THE TOP ONE-THIRD OF THE BALL TO PREVENT WICKING. ANY BURLAP THAT IS NOT BIODEGRADABLE SHALL BE CAREFULLY REMOVED TO PROTECT DAMAGE TO FEEDER ROOTS. GROW BAGS SHALL BE REMOVED IN THEIR ENTIRETY. ALL BALLED & BURLAPPED STOCK THAT IS NOT IMMEDIATELY PLANTED, SHALL BE HEALED IN AND THOROUGHLY WATERED UNTIL PLANTING. LIFTING, MOVING, OR ADJUSTING THE PLANT MATERIAL BY THE TRUNK IS PROHIBITED.

CONTAINER GROWN STOCK: ALL CONTAINER GROWN STOCK SHALL BE HEALTHY, VIGOROUS, WELL-ROOTED (NOT ROOT BOUND), AND ESTABLISHED IN THE CONTAINER IN WHICH THEY ARE SOLD. THE PLANTS SHALL HAVE TOPS OF GOOD QUALITY AND BE IN A HEALTHY GROWING CONDITION. ALL CONTAINER GROWN STOCK THAT IS NOT IMMEDIATELY PLANTED, SHALL BE STORED IN A MANNER TO SHADE THE CONTAINERS FROM DIRECT SUNLIGHT TO MINIMIZE ROOT DAMAGE. ALL CONTAINER STOCK SHALL BE THOROUGHLY WATERED PRIOR TO PLANTING AND DURING STORAGE UNTIL PLANTING. LIFTING AND MOVING OF THE PLANT MATERIAL SHALL BE BY THE CONTAINER ONLY.

MEASUREMENTS: TREES HEIGHTS SHALL BE MEASURED FROM GROUND TO THE AVERAGE BRANCH HEIGHT OF CANOPY. SPREAD SHALL BE MEASURED TO THE END OF BRANCHING EQUALLY AROUND THE CROWN FROM THE CENTER OF THE TRUNK. MEASUREMENTS SHALL NOT INCLUDE ANY TERMINAL GROWTH. SHRUBS HEIGHT SHALL BE MEASURED FROM THE GROUND TO THE AVERAGE POINT WHERE MATURE PLANT GROWTH STOPS. SPREAD SHALL BE MEASURED TO THE END OF BRANCHING EQUALLY AROUND THE SHRUB MASS. MEASUREMENT SHALL NOT INCLUDE ANY TERMINAL GROWTH. PALMS SHALL BE MEASURED BY THREE HEIGHT CLASSIFICATIONS: OVERALL HEIGHT, CLEAR WOOD, AND GRAY WOOD. OVERALL HEIGHT SHALL BE MEASURED FROM THE FROM THE GROUND TO THE AVERAGE FROND HEIGHT AT TIME OF INSTALLATION. CLEAR WOOD SHALL BE MEASURED FROM THE GROUND AT TIME OF INSTALLATION TO THE BOTTOM OF THE FROND SHEATH. GRAY WOOD SHALL BE MEASURED FROM THE GROUND AT TIME OF INSTALLATION TO THE TOP OF HARDENED WOOD.

PLANTING SOIL AND BACKFILL: PLANTING SOIL FOR USE IN PREPARING BACKFILL FOR PLANT PITS SHALL BE A FERTILE, FRIABLE, NATIVE SOIL WITHOUT MIXTURE OF SUBSOIL MATERIALS. IT SHALL BE FREE FROM HEAVY CLAY, STONES, LIME, LUMPS, PLANTS, ROOTS OR OTHER FOREIGN MATERIALS, NOXIOUS GRASSES OR WEEDS. IT SHALL NOT CONTAIN TOXIC SUBSTANCES WHICH MAY BE HARMFUL TO PLANT GROWTH. AMEND BEDS WITH 3" MINIMUM OF ORGANICS TO ACHIEVE OPTIMAL PH LEVELS AND SOIL AERATION. ROTOTILL TO A DEPTH OF 6" AND INCORPORATE A COMPLETE SLOW RELEASE FERTILIZER AT A 3-1-2 RATIO. THE RESULTS OF POST SOIL MODIFICATION TESTING, BASED ON LIKE PLANTING CONDITIONS AND AREA PROXIMITY, SHALL BE SUBMITTED TO FLORIDA DESIGN CONSULTANTS INC.'S FOR APPROVAL PRIOR TO PLANTING.

COMMERCIAL FERTILIZER: FERTILIZERS SHALL BE UNIFORM IN COMPOSITION, DRY, AND FREE FLOWING AND DELIVERED TO THE SITE IN ORIGINAL UNOPENED BAGS BEARING ALL THE MANUFACTURER'S LABELS. ALL FERTILIZER IS TO BE SLOW RELEASE AND COMPLETE WITH NECESSARY MICRONUTRIENTS. AFTER INSTALLATION, FERTILIZER SHALL BE CLEANED FROM ALL HARDSCAPE SURFACES AND WATERED IN THOROUGHLY PER MANUFACTURER'S SPECIFICATIONS. TREES AND SHRUBS MIXTURE SHALL CONSIST OF A SLOW RELEASE THE FORMULATION OF 3 PARTS NITROGEN TO 1 PART PHOSPHOROUS TO 2 PARTS POTASSIUM (3-1-2 RATIO). ALL TREES AND SHRUBS SHALL BE FERTILIZED BI MONTHLY DURING THE GROWING SEASON AT A RATE OF 4-6 LBS. OF A PER 100 SQ. FT. OF BEDS / TREE CANOPY (3' FORM BASE TO DRIPLINE) OR PER MANUFACTURE'S RECOMMENDATION. SOD FERTILIZER SHALL BE TURF SPECIFIC FOR ESTABLISHING NEW LAWNS AND APPLIED PER MANUFACTURE'S RECOMMENDATION. UPON ESTABLISHMENT, THE TURF SHALL BE FERTILIZED AT A RATE OF 1 LB OF ACTUAL NITROGEN PER 1000 FT. SQ. OR PER MANUFACTURE'S RECOMMENDATION. (NOTE: BAHIA TURF SHALL RECEIVE FERTILIZATION AT A HALF RATE OF THE ABOVE TURF RECOMMENDATIONS.) APPLY A 1/2 LBS. OF A PALM SPECIFIC (1 PART NITROGEN TO 1 PART POTASSIUM WITH 0.3 PARTS MAGNESIUM) FERTILIZER QUARTERLY FOR ALL ESTABLISHED PALMS PER 2' OF HEIGHT OR PER MANUFACTURE'S RECOMMENDATION.

MULCH: MATERIAL SHALL BE DARK BROWN CYPRESS MULCH, FREE FROM WEED SEEDS, AND APPLIED TO A MINIMUM 3" DEPTH.

SEED: ALL SEED SHALL MEET FLORIDA STATE PLANT BOARD. SEED SHALL BE INSTALLED AND WATERED WITHIN 24 HOURS AFTER HARVESTING.

SUBSTITUTIONS: NO SUBSTITUTION OF ANY MATERIALS' VARIETIES, GRADES, OR SIZES SHALL BE ALLOWED WITHOUT WRITTEN AUTHORIZATION FROM THE LANDSCAPE ARCHITECT. ANY / ALL UNAUTHORIZED SUBSTITUTIONS MAY REQUIRE REPAIRING / REPLACING AT THE CONTRACTOR'S EXPENSE AND AT FLORIDA DESIGN CONSULTANTS, INC.'S DISCRETION.

WARRANTY: THE CONTRACTOR SHALL WARRANTY ALL WORKMANSHIP FOR THE PERIOD OF ONE YEAR AFTER FINAL ACCEPTANCE FROM THE OWNER AND FLORIDA DESIGN CONSULTANTS, INC. ANY DEAD, UNHEALTHY, NON-CONFORMING PLANT MATERIAL SHALL BE REPLACED AT THE CONTRACTOR'S EXPENSE WITHIN 7 DAYS OF NOTICE FROM THE OWNER OR FLORIDA DESIGN CONSULTANTS, INC. THE CONTRACTOR SHALL NOT BE LIABLE FOR "ACTS OF GOD" AND VANDALISM, NEGLIGENCE AND THEFT BY OTHERS.

QUALITY ASSURANCE: THE CONTRACTOR SHALL PROVIDE SUBSTANTIAL PROOF TO FLORIDA DESIGN CONSULTANTS, INC. THAT HE / SHE HAS A MINIMUM OF 5 YEARS EXPERIENCE IN THE FIELD OF LANDSCAPE CONTRACTING WITH PROJECTS OF SIMILAR SCOPE. THE CONTRACTOR MUST SUPPLY AT ALL TIMES ON SITE WHEN WORK IS BEING PERFORMED A QUALIFIED SUPERVISOR WITH A MINIMUM OF 18 MONTHS FIELD EXPERIENCE. ALCA LANDSCAPE CERTIFICATIONS CAN SUBSTITUTE IN LIEU OF THE EXPERIENCE REQUIREMENT AT FLORIDA DESIGN CONSULTANTS, INC.'S DISCRETION.

UTILITY SCREENING

THE CONSTRUCTION OF ALL ABOVE GROUND UTILITY APPURTENANCES VISIBLE FROM THE PUBLIC RIGHT-OF-WAY SUCH AS PEDESTALS, UTILITY METERS, TRANSFORMERS, BACK-FLOW PREVENTION DEVICES, ETC FOR NEW DEVELOPMENT OR REDEVELOPMENT ACTIVITIES SHALL CONFORM TO SCREENING REQUIREMENTS AS OUTLINED IN SECTION 6.06.06.C.10 OF THE LAND DEVELOPMENT CODE. PLANT LOCATION MUST BE CONSIDERATE OF REQUIRED SPATIAL SEPARATIONS FROM A FIRE FLOW PROTECTION APPLIANCE IN ACCORDANCE TO THE UNIFORM FIRE CODE.

LANDSCAPE CONSTRUCTION NOTES:

1. THE CONTRACTOR SHALL BE RESPONSIBLE FOR THE LOCATION OF ALL UTILITIES AND SERVICES BOTH UNDERGROUND AND OVERHEAD PRIOR TO THE COMMENCEMENT OF WORK. PROTECTION OF ALL UTILITIES AND SERVICES THROUGHOUT THE COURSE OF WORK IS EXPECTED. IF CONFLICT EXISTS, CONTRACTOR IS TO CONTACT THE LANDSCAPE ARCHITECT.
2. ALL DISTURBED LANDSCAPE AREAS (EXCEPT FOR PLANTING BEDS) SHALL BE SEEDED UNLESS OTHERWISE INDICATED ON THE DRAWINGS. CONTRACTOR SHALL GET APPROVAL OF FINE GRADING FROM LANDSCAPE ARCHITECT PRIOR TO THE INSTALLATION OF TURF. GRADING FOR LANDSCAPE BERMING SHOWN ON PLANS AND DETAILS IS APPROXIMATE ONLY, CONTRACTOR SHALL CONFER WITH LANDSCAPE ARCHITECT PRIOR TO COMMENCING THIS WORK TO CONFIRM ACTUAL SHAPES AND ELEVATIONS OF THE LANDSCAPE BERMING. IT SHALL BE THE RESPONSIBILITY OF THE CONTRACTOR TO FINISH GRADE ALL LANDSCAPE AREAS ELIMINATING ALL BUMPS, DEPRESSIONS, ROCKS, STICK, OR OTHER DEBRIS PRIOR TO THE INSTALLATION OF PLANT MATERIAL. THE CONTRACTOR SHALL ALSO BE RESPONSIBLE FOR MAINTAINING POSITIVE SHEET FLOW DRAINAGE AWAY FROM ALL STRUCTURES AND TO ALL DRAINAGE WAYS SHOWN OR IMPLIES ON THE DRAWINGS.
3. IT IS THE CONTRACTORS RESPONSIBILITY TO INSURE GRADING DOES NOT CONFLICT WITH CIVIL GRADING PLAN.
4. THE LANDSCAPE ARCHITECT RESERVES THE RIGHT TO RELOCATE/ REPOSITION ANY PLANTS, AS SITE CONDITIONS MAY DEVIATE DURING CONSTRUCTION.
5. THE CONTRACTOR SHALL COORDINATE ALL WORK WITH ALL TRADES SO AS TO AVOID ANY CONFLICT WITH THE EXECUTION OF WORK BY OTHERS. OWNER SHALL NOT BE RESPONSIBLE FOR THE DAMAGE TO PLANT MATERIALS CAUSED BY OTHER TRADES OR SUBCONTRACTORS. THE CONDITION OF PLANT MATERIAL SHALL BE IN ACCORDANCE TO THE LANDSCAPE ARCHITECT.
6. THE CONTRACTOR SHALL VERIFY ALL QUANTITIES ON THE DRAWINGS PRIOR TO BIDDING. QUANTITIES ON THE MATERIALS SCHEDULE ARE PROVIDED FOR CONVENIENCE ONLY.

THE CONTRACTOR IS RESPONSIBLE FOR OBTAINING ALL APPLICABLE PERMITS.

STATUTORY LANDSCAPE NOTES:

1. SEE ENGINEER PLANS FOR ALL OTHER REQUIRED CALCULATIONS. THIS VEGETATION PLAN MEETS AND/OR EXCEEDS THE MINIMUM REQUIREMENTS OF THE LANDSCAPING SECTION OF THE COUNTY LANDSCAPING CODE.
2. ALL TREES NOT HAVING A MATURE CANOPY OF A TWENTY FEET (20') MINIMUM, SHALL BE MASSED TO CREATE AN EQUIVALENT TWENTY FEET (20') OF CANOPY.
3. ALL TREES ADJACENT TO WALKS, BIKE PATHS, AND RIGHTS-OF-WAY MUST BE MAINTAINED WITH EIGHT FEET OF CLEAR TRUNK.
4. PLANTINGS IN EASEMENTS: UTILITY, POWER, OR DRAINAGE EASEMENTS MAY OVERLAP REQUIRED BUFFERS; HOWEVER NO REQUIRED TREES OR SHRUBS MAY BE LOCATED IN ANY UTILITY, POWER, OR STREET EASEMENT OR RIGHT-OF-WAY.
5. THE CONTRACTOR SHALL PROVIDE AND MAINTAIN THROUGH FINAL ACCEPTANCE (CERTIFICATE OF COMPLIANCE) A TREE PROTECTION BARRIER FOR ALL INDIVIDUAL OR MASSES OF INDIGENOUS PLANT MATERIALS BEING CREDITED AND/OR PRESERVED.
6. A LAYER OF MULCH TO A MINIMUM DEPTH OF (3) INCHES SHALL BE SPECIFIED ON THE LANDSCAPE PLAN IN PLANT BEDS AND AROUND INDIVIDUAL TREES IN TURF GRASS AREAS
7. THE CONTRACTOR SHALL BE REQUIRED TO MAINTAIN SAFE SIGHT DISTANCE TRIANGLES AT ALL INTERSECTIONS AND VEHICULAR CONNECTIONS SIGHT TRIANGLES MUST BE IN ACCORDANCE WITH LOCAL MUNICIPALITY STANDARDS. CONTRACTOR TO VERIFY PRIOR TO FINAL ACCEPTANCE.
8. THE FOLLOWING EXOTIC SPECIES OF PLANTS AS LISTED IN THE FLORIDA EXOTIC PEST PLANT COUNCIL'S 2007 INVASIVE PLANT LIST SHALL BE REMOVED AND MAINTAINED FROM OPEN SPACES IN PERPETUITY.
MELALEUCA SPP. (PUNK, CAJEPUT, PAPERBACK TREE) 2. CASUARINA SPP. (AUSTRALIAN PINE) 3. SCHINUS SPP. (BRAZILIAN PEPPER, FLORIDA HOLLY) 4. ACACIA AURICULIFORMIS (EARLEAF ACACIA) 5. RHODMYRTUS TOMENTOSUS (DOWNY ROSE MYRTLE) 6. SOLANUM VIARUM (TROPICAL SODA APPLE)
ALBIZIA LEBBECK (WOMAN'S TOGUE) 8. BISCHOFIA JAVANICA (BISHOPWOOD) 9. CUPIANOPSIS ANACARDIOIDES (CARROTWOOD) 10. DALBERGIA SISSOCO (ROSEWOOD) 11. DIOSCOREA ALATA (AIR POTATO) 12. EUCALYPTUS CAMALDULENSIS (MURRAY RED GUM) 13. FICUS SPP. (WEEPING FIG, CUBAN LAUREL FIG) 14. LYGODIUM (JAPANESE CLIMBING FERN, OLD WORLD CLIMBING FERN) 15. SAPIUM SEBIFERUM (CHINESE TALLOW) 16. SYZYGIUM (JAVA PLUM, ROSE APLLE) 17. THESPESIA OPULNEA (CORK TREE) 18. WEDELIA TRILOBATA (WEDELIA) 19. ABRUS PRECATORIUS (ROSARY PEA) 20. ARDISIA SPP. (CORAL ARDISIA, SHOEBUTTON ARDISIA) 21. ASPARAGUS AETHIOPICUS (ASPARAGUS FERN) 22. BAUHINIA VARIEGATA (ORCHID TREE) 23. CALOPHYLLUM ANTILLANUM (SANTA MARIA) 24. CINNAMONMUM CAMPHORA CAMPHOR TREE) 25. COLOCASIA ESCULENTA (WILD TARO) 26. COLUBRINA ASIATICA (LEATHER LEAF) 27. DIOSCOREA ALATA (WINGED YAM) 28. EICHHORNIA CRASSIPES (WATER-HYACINTH) 29. EUGENIA UNIFLORA (SURINAM CHERRY) 30. HYDRILLA VERTICILLATA (HYDRILLA) 31. HYGROPHILA POLYSPERMA (GREEN HYGRO) 32. HYMENACHNE AMPLEXICAULIS (WEST INDIAN MARSH GRASS) 33. IMPERATA CYLINDRICA (COGON GRASS) 34. JASMINUM DICHOTOMUM (GOLD COAST JASMINE) 35. JASMINUM FLUMINENSE (BRAZILIAN JASMINE) 36. LANTANA CAMARA (LANTANA) 37. LIGUSTRUM SINENSE (CHINESE PRIVET) 38. LUDWIGIA PERUVIANA (PERUVIAN PRIMROSEWILLOW) 39. MACFADYENA UNGUIS-CATI (CAT'S CLAW VINE) 40.MANILKARA ZAPOTA (SAPODILLA) 41. MIMOSA PIGRA (CATCLAW MIMOSA) 42. NEPHROLEPIS CORDIFOLIA (SWORD FERN) 43. NEPHROLEPIS MULTIFOLIA (ASIAN SWORD FERN) 44. NEYRAUDIA REYNAUDIANA (CANE GRASS) 45. PAEDERIA CRUDDASIANA (ONION VINE) 46. PAEDERIA FOETIDA (SKUNK VINE) 47. PANICUM REPENS (TORPEDO GRASS) 48. PENNISETUM PUPUREM (NAPIER GRASS) 49. PISTIA STRATIOTES (WATER LETTUCE) 50. PSIDIUM CATTLEIANUM (STRAWBERRY GUAVA) 51. PSIDIUM GUAJAVA (GUAVA) 52. PUERARIA MONTANA VAR. LOBATA (KUDZU) 53. RHYNCHELTRUM REPENS (NATAL GRASS) 54. RUELLIA TWEEDIANA (MEXICAN PETUNIA) 55. SCAEVOLA TACCADA (BEACH NAUPAKA) 56. SCHEFFLERA ACTINOPHYLLA (QUEENSLAND UMBRELLA TREE) 57. SENNA PENDULA VAR. GLABRATA (CLIMBING CASSIA, CHRISTMAS CASSIA) 58. SOLANUM TAMPICENSE (WETLAND NIGHTSHADE) 59. SYNGONIUM PODOPHYLLUM (ARROWHEAD VINE) 60. TECTARIA INCISA (INCISED HALBERD FERN) 61. UROCHLOA MUTICA (PARA GRASS)

PASCO COUNTY LANDSCAPING STANDARD NOTES (PASCO LDC 905.2)

1. MAINTENANCE RESPONSIBILITY. THE COUNTY IS NOT RESPONSIBLE FOR MAINTENANCE OF ANY LANDSCAPING UNLESS APPROVED THROUGH A COUNTY MAINTENANCE AGREEMENT. (LDC 905.2-C.1.A)
2. CLEAR-SIGHT TRIANGLE. WHERE A DRIVEWAY/ACCESSWAY INTERSECTS A ROAD RIGHT-OF-WAY OR WHERE TWO (2) ROAD RIGHTS-OF-WAY INTERSECT, VEGETATION, STRUCTURES, AND NON-VEGETATIVE VISUAL SCREENS SHALL NOT BE LOCATED SO AS TO INTERFERE WITH THE CLEARSIGHT TRIANGLE AS DEFINED IN THIS CODE OR THE FLORIDA DEPARTMENT OF TRANSPORTATION, MANUAL OF UNIFORM MINIMUM STANDARDS, MOST RECENT EDITION (GREEN BOOK), WHICHEVER IS MORE RESTRICTIVE. (LDC 905.2-C.1.B)
3. SUSTAINABLE PRACTICES. LANDSCAPING SHALL BE INSTALLED SO THAT LANDSCAPING MATERIALS MEET THE CONCEPT OF RIGHT MATERIAL/RIGHT PLACE. INSTALLED TREES AND PLANTS SHALL BE GROUPED INTO ZONES ACCORDING TO WATER, SOIL, CLIMATE, AND LIGHT REQUIREMENTS. PLANT GROUPINGS BASED ON WATER REQUIREMENTS ARE DROUGHT TOLERANT, NATURAL, AND OASIS. (LDC 905.2-C.1.C)
4. DIVERSITY. A MAXIMUM OF 50 PERCENT OF THE PLANT MATERIALS USED, OTHER THAN TREES, MAY BE NON-DROUGHT TOLERANT. A MINIMUM OF 30 PERCENT OF THE PLANT MATERIALS, OTHER THAN TREES AND TURFGRASS, USED TO FULFILL THE REQUIREMENTS OF THIS SUBSECTION SHALL BE NATIVE FLORIDIAN SPECIES, SUITABLE FOR GROWTH IN THE COUNTY.
(LDC 905.2-C.1.D)
5. DIVERSITY. NO ONE PLANT SPECIES OF SHRUBS OR GROUND COVER PLANTS, EXCLUDING TURFGRASS, SHALL CONSTITUTE MORE THAN 25 PERCENT COVERAGE OF THE OVERALL LANDSCAPE AREA. (LDC 905.2-C.1.D.5)
6. QUALITY. ALL PLANT MATERIALS SHALL BE FLORIDA NO. 1 GRADE PER "GRADES AND STANDARDS FOR NURSERY PLANTS," FLORIDA DEPARTMENT OF AGRICULTURE AND CONSUMER SERVICES (FDACS), WHICH IS INCORPORATED HEREIN BY REFERENCE. (LDC 905.2-C.2.A)
7. AVOID EASEMENTS. TREES SHALL NOT BE PLANTED WITHIN ANY EASEMENT SO AS TO INTERFERE WITH THE USE OF THAT EASEMENT, NOR UNDER ANY PRESENT OR PLANNED OVERHEAD UTILITY, NOR IN ANY RIGHTS-OF-WAY WITHOUT COUNTY APPROVAL THROUGH THE ASSOCIATED REVIEW PROCESS. (LDC 905.2-C.3.C)
8. MULCH SHALL BE USED IN CONJUNCTION WITH LIVING PLANT MATERIALS SO AS TO COVER EXPOSED SOIL. MULCH SHALL BE INSTALLED TO A MINIMUM DEPTH OF THREE (3) INCHES. THE MULCH SHOULD NOT BE PLACED DIRECTLY AGAINST THE PLANT STEM OR TREE TRUNK. MULCH SHALL NOT BE REQUIRED FOR ANNUAL BEDS. STONE OR GRAVEL MAY BE USED TO COVER A MAXIMUM OF 20 PERCENT OF THE LANDSCAPED AREA. (LDC 905.2-C.3.D)
9. QUALITY PRACTICES. ALL LANDSCAPING SHALL BE INSTALLED IN ACCORDANCE WITH STANDARDS AND PRACTICES OF THE FLORIDA NURSERY, GROWERS, AND LANDSCAPE ASSOCIATION AND THE FLORIDA CHAPTER OF THE INTERNATIONAL SOCIETY OF ARBORICULTURE. (LDC 905.2-C.3.E)
10. ALL PORTIONS OF A LOT UPON WHICH DEVELOPMENT HAS COMMENCED, BUT NOT CONTINUED FOR A PERIOD OF 30 DAYS, SHALL BE PLANTED WITH A GRASS SPECIES OR GROUND COVER TO PREVENT EROSION AND ENCOURAGE SOIL STABILIZATION. ADEQUATE COVERAGE, SO AS TO SUPPRESS FUGITIVE DUST, SHALL BE ACHIEVED WITHIN 45 DAYS. (LDC 905.2-C.3.G)
11. ALL REQUIRED LANDSCAPING SHALL BE MAINTAINED IN A HEALTHY CONDITION IN PERPETUITY IN ACCORDANCE WITH THIS CODE. (LDC 905.2-E.2)
12. ONGOING MAINTENANCE TO PREVENT THE ESTABLISHMENT OF PROHIBITED EXOTIC SPECIES IS REQUIRED.
(LDC 905.2-E.4)

ROBERT E. HAUGHT
REGISTERED LANDSCAPE ARCHITECT # 6666815

JOB NO.	EPN	DATE	DESIGNED	DRAWN	CHECKED	Q.C.
506-100F	213	10-1-2015	RAH	RAH	PES	

NO.	DATE	REVISIONS	APP'D BY

DESIGNED FOR
ASTURIA COMMUNITY DEVELOPMENT DISTRICT
605 PALENCIA CLUB DRIVE, ST. AUGUSTINE, FLORIDA 32095
PHONE: (904) 810-0500 - FAX: (904) 810-0525 - E-MAIL: sean.manson@hines.com

PROJECT NAME
Asturia
PHASE 2

SHEET NAME
LANDSCAPING DETAILS

ENGINEER / SURVEYOR
FLORIDA DESIGN CONSULTANTS, INC.
— THINK IT. ACHIEVE IT. —
3030 STARKEY BOULEVARD, NEW PORT RICHEY, FLORIDA 34655
PHONE: (800) 532 - 1047 FAX: (727) 848 - 3648 WWW.FLDESIGN.COM C.A. NO. 7421
E-MAIL: pskidmore@fldesign.com

PLAN SET DATE
October 7, 2015

©Copyright 2015 Florida Design Consultants, Inc. Drawings and concepts may not be used or reproduced without written permission.

K:\213\ProjData\ConstDocs\Plans\Phase 2\213_ASTURIA-PH2-PDTLSP-2.dwg - Oct 20, 2015 @ 1:10pm - rhaught