PASCO COUNTY, FLORIDA

"Bringing Opportunities Home"

WEST PASCO GOVERNMENT CENTER
PLANNING AND DEVELOPMENT DEPARTMENT
8731 CITIZENS DRIVE, SUITE 230
NEW PORT RICHEY, FL 34654
TELEPHONE: (727) 847-8132
FAX: (727) 847-8901
dmasumian@pascocountyfl.net

October 7, 2015

Lara G. Bartholomew, PE
Heidt Design, LLC
5806-B Breckenridge Parkway
Tampa, FL 33610

RE: Connerton Village 2, Phase 1C – Parcel 213
Nonsubstantial Modification

Dear Ms. Bartholomew:

Please be advised that the above referenced submittal has been reviewed and approved by this office for compliance with the codes and requirements of Pasco County. The amendment allows for the following revisions:

1. Redevelop the previously proposed neighborhood park site into six lots (Block 20 Lots 15-20).
2. In Block 17, lots 32-38 and 44-47 have been removed and two parks created.
3. In Block 17, lots 31, 39, 43, and 48 have been made larger.

Please be advised, approval is subject to the following conditions:

1. All requirements and conditions of approval within Memorandum DR05-1992, as approved by the former Development Review Department on July 28, 2005, and each subsequently approved amendment, remain in full force and effect.

2. The owner/developer is hereby notified that any additional revisions shall be submitted to the Planning and Development Department for review and approval.

Please have the attached Developer's Acknowledgement signed, notarized and returned to our office.

Should you have any questions, please do not hesitate to contact our office at the above address or telephone number.

DEVELOPER'S ACKNOWLEDGMENT:

The developer acknowledges that it has read, understood, and accepted the above-listed conditions of approval.

_____ _____
Date Signature

_____
Print Name

_____
Title

STATE OF FLORIDA
COUNTY OF _____

The foregoing instrument was acknowledged before me this _____ (date), by _____ (name of corporation acknowledging) a _____ (State or place of incorporation) corporation, on behalf of the corporation. He/she is personally known to me or who has produced _____ (type of identification) as identification.

Seal:

_____
NOTARY

Sincerely,

Dorothy E. Masumian *Dawn Sutton*

Dorothy E. Masumian
Senior Development Review Technician

Dawn Sutton
Planner I

cc: an@woodscapital.com

CONNERTON VILLAGE 2 PHASE 1C3 (PARCEL 213)
PRELIMINARY DEVELOPMENT/CONSTRUCTION PLAN
NON-SUBSTANTIAL MODIFICATION

NARRATIVE

The applicant, Hayman Woods LLC, is requesting a non-substantial modification to the above-referenced plans, which were approved by Pasco County on January 6, 2015.

The primary purpose of the non-substantial modification request is to redevelop the previously proposed neighborhood park site into 6 lots. In addition, Lots 32-38 and 44-47, Block 17 have been removed and are now two neighborhood parks. Lots 31, 39, 43, and 48 have been made larger. The infrastructure improvements for this parcel are currently under construction. The redevelopment requires relocation of utility services and removal/replacement of some curb and some permit landscape plan changes.

As required, the areas revised on the plans have been clouded to better show the proposed changes.

We hope that this narrative meets the intended goal of providing a thorough description of the changes proposed. Please do not hesitate to contact Ed Rogers or Lara Bartholomew at (813) 253-5311 with any questions regarding this modification.

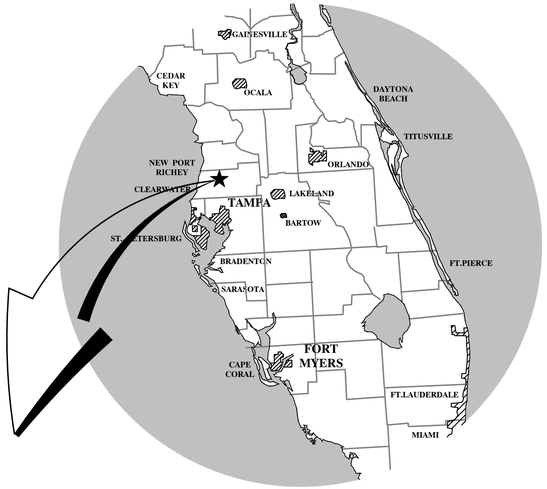

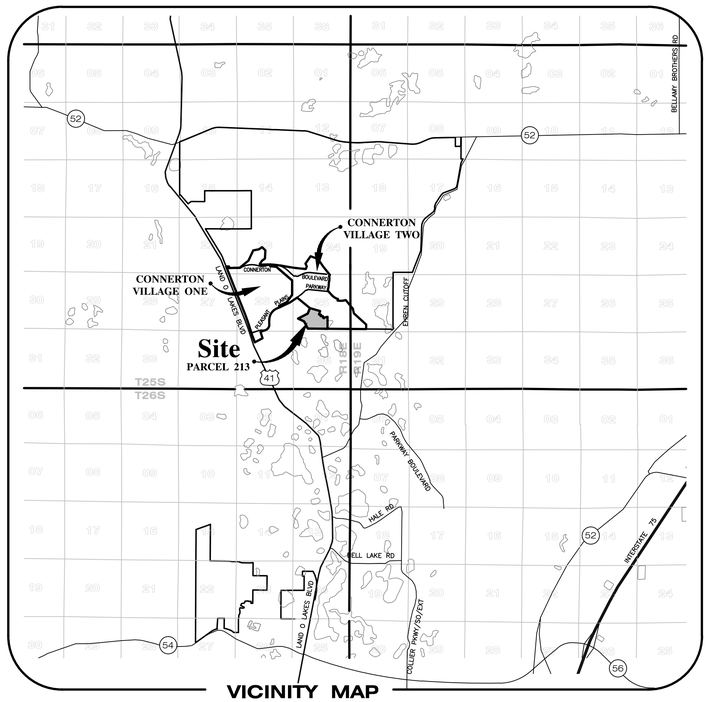

VICINITY MAP

SECTION 25, TOWNSHIP 25 SOUTH, RANGE 18 EAST
PASCO COUNTY, FLORIDA

MODIFICATION OF PRELIMINARY PLAN/CONSTRUCTION PLANS FOR

CONNERTON

VILLAGE TWO - PARCEL 213

A Portion of Phase 1C

SHEET NO.	DESCRIPTION
1	COVER SHEET
2	GENERAL CONSTRUCTION NOTES
3	AERIAL SITE PLAN
4-6	PRELIMINARY PLAN
7	TYPICAL ROADWAY SECTIONS
8	MASTER DRAINAGE PLAN
9	DRAINAGE STRUCTURE DATA / CROSS SECTIONS
10-11	NEIGHBORHOOD GRADING PLAN
12-18	ROADWAY PLAN AND PROFILES
19-20	SIGNING & PAVEMENT MARKING / SIDEWALK PLAN
21-22	SIDEWALK DETAILS
23-25	DRAINAGE DETAILS
26	WATER, REUSE AND SANITARY SEWER KEY MAP
27-28A	WATER, REUSE AND SANITARY SEWER PLANS
29-30	SANITARY SEWER PROFILES
31-33	WATER AND REUSE SYSTEM DETAILS
34-35	SANITARY SEWER SYSTEM DETAILS
1 of 1	PRE-DEVELPOMENT DRAINAGE AREA MAP
1 of 1	DRAINAGE AREA MAP
1,2 of 2	CONSTRUCTION SURFACE WATER MANAGEMENT PLAN
1,2 of 2	PERMIT LANDSCAPE PLAN

Prepared For:
OWNER/DEVELOPER
HAYMAN WOODS, L.L.C.
2100 McKINNEY AVENUE
DALLAS, TEXAS 75201
PHONE: (214) 302-0056

Prepared By:
HEIDT DESIGN
Civil Engineering • Planning & GIS
Transportation Engineering
Ecological Services • Landscape Architecture

5806-B Breckenridge Parkway
Tampa, Florida 33610
Office: 813-253-5311
Fax: 813-464-7629
www.HeidtDesign.com

PERMIT / FILE NOS.	
ADDRESS / CONTROL NO.	
WATER COMMITMENT	
SEWER COMMITMENT	
SWFWMD	
WATER DEP	
SEWER DEP	
PARCEL ID #	25-25-18-0000-00100-0090

NOTE:
The plan has been certified by the design engineer to be in substantial conformance with the Uniform Minimum Standards for Design, Construction and Maintenance of Streets and Highways as required by Section 336.045, Florida Statutes.

DATE	SHEET NO.	BY
07-15-15	PH 1C-3 LAYOUT	BAB
05/28/2015	SHEET 7	LGB
05/22/2015	SHEET 7	LGB
02-10-15	LOTS 17,18,19, BLK 18; SHTS 11, 28	MED
12-24-14	FDEP REVIEW COMMENTS-27,28,32	NYB
11-03-14	LOTS REQUIRING 79-G TESTING	SDM
11-03-14	REVISED TYPICAL SECTIONS	DWS
10-01-07	5,8,10,11,19,20,27,28,CSWMP1	RRR
08-16-07	1,5,6,11,15,28	JMH
07-26-07	10,12,19,20,27,CSWMP,PLP1&2	RRR
07-13-07	5,8,9,10,11,CSWMP1	RRR

REVISIONS

CONNERTON
VILLAGE TWO - PARCEL 213
A Portion of Phase 1C

DATE:
EDWIN J. ROGERS FLORIDA PROFESSIONAL ENGINEER 50082

DATE: MAY 14, 2007
JOB NO. HWL-CT-1070

Elevations based on National Geodetic Vertical Datum 1929 (NGVD 29)
Conversion from NGVD 29 to NAVD 88 = -0.85 Feet

STREET & DRAINAGE	WATER & SANITARY SEWER
DESIGNED BY: WERTZ	DESIGNED BY: MIDDLETON
DRAWN BY: MIDDLETON	DRAWN BY: MIDDLETON

FILE: CV

SHEET 1 OF 35

R:\CONNERTON\HWL - CONNERTON\PARCEL 213\ENGINEERING\CV.DWG-1 OF 35 2015/07/28 4:56 PM BRYANT BOYLES

STORM WATER POLLUTION PREVENTION PLAN

Contained on these plans and within the following notes is a Storm Water Pollution Prevention Plan (The Plan) which has been developed by Heidt Design L.L.C. in accordance with the Environmental Protection Agency's "National Pollutant Discharge Elimination System" (NPDES) General Permit.

The following entities are identified as team members of "The Plan": Heidt Design L.L.C., the Developer as identified in the title box of these plans, and the site contractor and his sub-contractors. Each team member has specific responsibilities and obligations. In general, all team members, with regard to their involvement and responsibilities on the project, are to implement all necessary storm water management controls to assure compliance with the NPDES General Permit for Storm Water Discharges from Construction Activities, the Southwest Florida Water Management District Permit, the applicable local governing agency (i.e. Hillsborough County, City of Tampa, etc) and the guidelines listed in the SWPPP. The duties and responsibilities of the team members as they pertain to the SWPPP are as follows:

Heidt Design L.L.C.

A. Develop Storm Water Pollution Prevention Plan (SWPPP) including, but not limited to, retention/detention ponds, control structures, erosion control methods and locations and stabilization criteria. This design is included within these construction plans and the following notes and instructions.

B. Submit and obtain the necessary design related storm water permits from the Florida Department of Environmental Protection, the Southwest Florida Water Management District and other applicable governmental bodies.

C. Upon notification by the developer of his intent to commence construction, submit a Notice of Intent to the Environmental Protection Agency on behalf of the developer and the contractor. Also, submit a copy of the SWFWMD permit or completeness letter if the permit is not yet available. This submittal will be made no later than 48 hours prior to beginning of construction.

D. Submit to SWFWMD and the operator of the municipal separate storm water system, if applicable, a letter of construction commencement.

E. Complete and submit a Notice of Termination and certification for developer and contractor. The NOT's shall be submitted no more than 30 days after (a) completion of the project and final stabilization of the site or (b) when responsibility for the site has ended. Final stabilization as defined by EPA is when all soil disturbing activities at the site have been completed and a uniform (e.g. evenly distributed, without large bare areas) perennial vegetative cover with a density of 70% of the native background vegetative cover for the area has been established on all unpaved areas and areas not covered by permanent structures. As an alternative, equivalent permanent stabilization measures (such as riprap, gabions, or geotextiles) may be employed. Both the client and contractor shall notify Heidt Design L.L.C. when one of these criteria has been met.

Contractor

A. Sign and return to Heidt a Notice of Intent and a Certification of Storm Water Pollution Prevention Plan no later than 48 hours prior to commencement of construction. Copy Heidt Design L.L.C. and the developer on the NOI permit when received. Also, each subcontractor affected by the SWPPP must certify to the contractor that they understand and shall comply with the NPDES permit and SWPPP. A record of these certifications shall be maintained by the contractor on site.

B. During construction, assure compliance with the designed Storm Water Pollution Prevention Plans prepared by Heidt Design L.L.C. and the NPDES General Permit for Storm Water Discharges from Construction Activities.

C. Maintain a copy of the construction plans, which include the Storm Water Pollution Prevention Plan both NOI's and all inspection reports and certifications on site.

D. Undertake all reasonable Best Management Practices (BMP's) to assure that silted or otherwise polluted storm water is not allowed to discharge from the site during all phases of construction. Stabilization BMP's that may be used include: temporary or permanent seeding, mulching, geotextiles, sodding, vegetative buffer strips, protection of trees and preservation of mature vegetation. Structural erosion and sediment control BMP's that may be used include: straw bale dikes, silt fences, earth dikes, brush barriers, drainage swales, check dams, subsurface drain, pipe slope drain, level spreaders, storm drain inlet protection, outlet protection, sediment traps, and temporary sediment basins. Detention ponds may also be used as temporary sediment basins. Additional BMP's that may need to be implemented include: providing protected storage areas for chemicals, paints, solvents, fertilizers, and other potentially toxic materials. Providing waste receptacles at convenient locations and providing regular collection of wastes, including building material wastes. Minimizing off-site tracking of sediments. Making adequate preparations, including training and equipment to contain spills of oil and hazardous materials. Complying with applicable state or local waste disposal, sanitary sewer or septic system regulations and the use of appropriate pollution prevention measures for allowable non-storm water components of discharge.

E. Notify Heidt Design L.L.C. and the developer in writing of any non-storm water pollution sources which are being stored, or otherwise used during the construction of the project, i.e., fertilizers, fuels, pesticides, other chemicals. This notification should be accompanied with the contractor's design and methods to prevent pollution run-off from these sources.

F. Develop a maintenance and inspection plan which includes, but is not limited to the following:

A. The specific areas to be inspected and maintained that includes all the disturbed areas and material storage areas of the site.

B. The erosion and sediment controls identified in the SWPPP to be maintained and inspected and those additional controls that the contractor deems necessary.

C. Maintenance procedures.

D. The procedure to follow if additional work is required or whom to call.

E. Inspections and maintenance forms.

F. The personnel assigned to each task.

The following shall be inspected a minimum of once a week or within 24 hours after 0.25 inches of rainfall:

Stabilization measures (once a month if fully stabilized).

Structural controls.

Discharge points.

Construction entrances and exits.

Areas used for storage of exposed materials.

An inspection form shall be completed for each inspection. Any permit violations should be noted and corrective measures to be taken shall be noted. If revisions to the SWPPP are needed, a report form for changes in the SWPPP shall be completed and a copy sent to Heidt Design L.L.C.. The original shall be kept on-site as documentation of the change. If the inspection passes, a certification that the facility is in compliance with the SWPPP and the NPDES permit must be signed by one of the following:

The principal executive officer or ranking elected official of the operator of the SWPPP.

A duly authorized representative of the principal executive official of the operator of the SWPPP.

If required, storm water discharge samples are to be taken at the locations specified by the engineer of record. The sampling should be performed according to the following criteria:

A grab bag sample will be taken during regular workings hours, once per month, within the first 30 minutes of a qualifying event (a rain event at 0.5 inches or greater in a 24 hour period) or within the first 30 minutes of the beginning of the discharge of a previously collected qualifying event for settable solids, total suspended solids, turbidity flow. This data is to be recorded and submitted to EPA once per month.

Retain inspection reports and certifications for at least three years.

G. Initiate site stabilization measures no more than 14 days after construction activities have temporarily or permanently ceased on any major portion of the site except when construction will resume within 21 days.

H. Notify Heidt when it is time to submit a Notice of Termination as defined under Part E of the Heidt Design L.L.C. section of the SWPPP. Sign and return to Heidt the Notice of Termination form and certification.

Developer

A. Notify Heidt of your intent to commence construction. Sign the Notice of Intent form as operator of the storm water discharge facility and permittee and return to Heidt Design L.L.C.. Copy Heidt Design L.L.C. on the NOI Permit when it is received.

B. Sign a Certification of Storm Water Pollution Prevention Plan and return to Heidt Design L.L.C..

C. Notify Heidt when it is time to submit a Notice of Termination as defined under Part E of the Heidt Design L.L.C. section of the SWPPP. Sign and return to Heidt Design L.L.C. for submittal to EPA a Notice of Termination form and certification.

PRE-DEVELOPED SITE INFORMATION:

1. Total site acreage: 75.15
2. Land use: Improved Pasture and Forrested Wetlands
3. Vegetation: Pasture & Wetlands
4. Receiving waters or municipal separate storm water system: Five Mile Creek
5. 2 Year/24 Hour rainfall depth: 4.5 in./hr.
6. Soil types: Myakka, Sellers, Basinger, Smyrra, Samsula, Zolfo, Tavares.
7. Endangered species: N/A

PROJECT INFORMATION:

1. Project type: Residential
2. Anticipated construction sequence is as follows:
   1. Complete erosion control installation
   2. Clearing and grubbing
   3. Earthwork activities
   4. Storm water system construction
   5. Utility construction
   6. Base and pavement construction
   7. Final stabilization

   The BMP's listed in Part D of the Contractor section of the SWPPP shall be considered during all phases of construction.
3. Anticipated start date: January 2008
4. Anticipated completion date: January 2009
5. Total acres disturbed: 63.0
6. Pre-developed "C" factor: 0.2
7. Post-developed "C" factor: 0.45
8. The storm water management system, upon completion of construction and appropriate certification and as-built submittals will be operated and maintained by Connertion West C.D.D.
9. The potential source of pollution from this project is on-site development and construction activity.
10. Does the project discharge into a water body listed on the 1998 EPA approved 303 (d) list for water segments which are impaired due to total suspended solids? ____ Yes _X__ No If so, sampling is required as follows:____.

GENERAL EROSION AND TURBIDITY CONTROL NOTES

1. The Site Subcontractor shall be responsible for installation and maintenance of all erosion and turbidity controls and the quality and quantity of offsite or wetland discharges.
2. Prior to construction, the Site Subcontractor is responsible for having his dewatering plan and turbidity control plan approved by the applicable reviewing agencies. Refer to the project's permit approvals and permit conditions for agencies requiring such review and approval. Questions concerning appropriate techniques should be addressed to those agencies and/or discussed with the project engineer and owner.
3. The appropriate turbidity and erosion control methodologies selected by the Site Subcontractor for this project should be made following assessment of the plans and project site specific factors and after consultations as needed with the project engineer and appropriate agencies. The Site Subcontractor will be responsible for obtaining any and all necessary permits for such activity; several factors to consider are listed below:
   A. Clay content in excavated materials and/or permeabilities rates
   B. Depth of cut in ponds, trenches, or utility lines
   C. Ambient ground water levels
   D. Actual rainfall amounts and time of year relative to normal rainy season
   E. Proximity to wetlands, water bodies or offsite properties
   F. 'Class' designation of receiving water bodies (i.e., Outstanding Florida Waters, shellfish harvesting areas, etc.)
   G. Density, type, and proximity of upland vegetation to be retained during construction (for use as possible filtration areas)
   H. Fill height relative to natural grade and length and steepness of the proposed slopes
   I. Existing topography and directions of surface flow
   J. Type of equipment used
   K. Project type
   L. Duration of construction activities
   M. Separation distance of onsite ponds
   N. Ambient quality of surface and groundwater
   O. Temporary stockpile locations and heights
4. At the onset of construction, the Site Subcontractor, as the party responsible for implementation of the erosion and sediment control plan, shall assess the above described conditions and factors with respect to relative cost effectiveness and select the appropriate methods of protection. A fairly extensive list of techniques are presented below but it must be stressed that any or all of the following may be necessary to maintain water quality and quantity standards. The construction sequencing should be thought out in advance of initiation to provide adequate protection of water quality.
5. Discharges which exceed 29 N.T.U.'s over the background levels are in violation of state water quality standards. Discharges of water quantities which affect offsite properties or may damage wetlands are also prohibited by regulating agencies.
6. The erosion and turbidity control measures shown hereon are the minimum required for agency approval. Additional control and measures may be required due to the Site Subcontractor's construction sequence & unforeseen weather conditions. Any additional measures deemed necessary by the Site Subcontractor shall be included in the lump sum bid with no extras for materials and labor allowed.
7. Hay bales or silt screens shall be installed prior to land clearing to protect water quality and to identify areas to be protected from clearing activities and maintained for the duration of the project until all soil is stabilized.
8. Floating turbidity barriers shall be in place in flowing systems or in open water lake edges prior to initiation of earthwork and maintained for the duration of the project until all soil is stabilized.
9. No clay material shall be left exposed in any stormwater storage facility. If clay or sandy-clays are encountered during stormwater storage excavation, the Site Subcontractor shall notify the Engineer immediately before proceeding with further excavation. If the Engineer of Record has determined that such soils are non-confining and must be excavated to meet permit and design conditions, excavation may proceed after obtaining written authorization from the appropriate governing agency (e.g. the Environmental Protection Commission of Hillsborough County (EPCHC) in Hillsborough County).
   If said soils are left exposed at the permitted and designed depth, the Site Subcontractor shall over-excavate the pond's bottom and side slopes by a minimum of twelve (12") inches and backfill with clean sands to help prevent suspension of fine particles in the water column.
10. The installation of temporary erosion control barriers shall be coordinated with the construction of the permanent erosion control features to the extent necessary to assure effective and continuous control of erosion and water pollution throughout the life of the construction phase.
11. The type of erosion control barriers used shall be governed by the nature of the construction operation and soil type that will be exposed. Silty and clayey material may require solid sediment barriers to prevent turbid water discharge, while sandy material may need only silt screens or hay bales to prevent erosion. Floating turbidity curtains should generally be used in open water situations. Diversion ditches or swales may be required to prevent turbid stormwater runoff from being discharged to wetlands or other water bodies. It may be necessary to employ a combination of barriers, ditches, and other erosion/turbidity control measures if conditions warrant.
12. Where pumps are to be used to remove turbid waters from construction areas, the water shall be treated prior to discharge to the wetlands. Treatment methods include, for example, turbid water being pumped into grassed swales or appropriate upland vegetated areas (other than upland preservation areas and wetland buffers), sediment basins, or confined by an appropriate enclosure such as turbidity barriers or low berms, and kept confined until turbidity levels meet State Water Quality Standards.
13. The Permittee shall schedule his operations such that the area of unprotected erodible earth exposed at any one time is not larger than the minimum area necessary for efficient construction operation, and the duration of exposed, uncompleted construction to the elements shall be as short as practicable. Clearing and grubbing shall be so scheduled and performed such that grading operations can follow immediately thereafter. Grading operations shall be so scheduled and performed that permanent erosion control features can follow immediately thereafter if conditions on the project permit.
14. Water derived from various dewatering methods should be passed through sufficiently wide areas of existing upland vegetation to filter out excess turbidity. If this is not sufficient, the water shall be retained in previously constructed permanent stormwater ponds or else retained in temporary sedimentation basins until the clarity is suitable to allow for its discharge. Plugging the outfalls from completed stormwater ponds may be needed to avoid discharge. However, such situations should be monitored closely to preclude berm failure if water levels rise too high.
15. Water can be transported around the site by the use of internal swales or by pumps and pipes.
16. Sheet flow of newly filled or scraped areas may be controlled or contained by the use of brush barriers, diversion swales, interceptor ditches or low berms. Flow should be directed toward areas where sediments can sufficiently settle out.
17. Exposed soils shall be stabilized as soon as possible, especially slopes leading to wetlands. Stabilization methods include solid sod, seeding and mulching or hydromulching to provide a temporary or permanent grass cover mulch blankets, filter fabrics, etc., can be employed to provide vegetative cover.
18. Energy dissipaters (such as rip rap, a gravel bed, hay bales, etc.) shall be installed at the discharge point of pipes or swales if scouring is observed.
19. Attempt to install roadway curb and gutters as soon as possible to reduce the surface area for erosion to occur.
20. Implement storm drain inlet protection (hay bales or gravel) to limit sedimentation within the stormwater system. Perform inspections and periodic cleaning of sediments which wash out into the streets until all soil is stabilized.
21. Water discharge velocities from impounded areas and temporary sedimentation basins shall be restricted to avoid scouring in receiving areas.
22. If water clarity does not reduce to state standards rapidly enough in holding ponds, it may be possible to use chemical agents such as alum to flocculate or coagulate the sediment particles.
23. Hay bales, silt screens, or gravel beds can be added around the pipe or swale discharge points to help clarify discharges. Spreader swales may help dissipate cloudy water prior to contact with wetlands.
24. All fuel storage areas or other hazardous storage areas shall conform to accepted state or federal criteria for such containment areas.
25. Vehicle or equipment washdown areas will be sufficiently removed from wetlands or offsite areas.
26. Fugitive dust controls (primarily by using water spray trucks) shall be employed as needed to control windborn emissions.
27. If the above controls remain ineffective in precluding release of turbid water, especially during pond or utility line dewatering, then the contractor may be compelled to use a vertical dewatering system such as well points or sock drains to withdraw groundwater which may already be clear enough to allow for direct discharge to wetlands.
28. Ongoing inspections and periodic maintenance by the Site Subcontractor shall occur throughout construction as necessary to insure the above methods are working suitably. This may be needed daily, if conditions so warrant. Site Subcontractors are encouraged to obtain and thoroughly review The Florida Development Manual: A Guide to Sound Land and Water Management, which was developed by the State of Florida Department of Environmental Protection in 1988. This provides fairly in-depth discussions of recommended techniques and also provides specific design and technical standards. A copy of this document is available for review at Heidt Design L.L.C..
29. The contractor will perform daily inspections of all on-site wetlands within the construction area to ensure that water levels within those wetlands are not excessively impounded prior to the time when the permitted control structure or outfall is built. Water levels significantly above normal should be corrected at a frequency that prevents a change in the vegetative character or health of any wetlands.

NOTES:

1. Owner/Developer: Hayman Woods, L.L.C.
   2100 McKinney Avenue
   Dallas, Texas 75201
   (214) 302-0056
2. Engineer: Heidt Design L.L.C.
   5806-B Breckenridge Parkway
   Tampa, Florida 33610
   (813) 253-5311

   Surveyor: GeoPoint Surveying, Inc.
   1403 E. 5th Avenue
   Tampa, Florida 33605
   (813) 248-8888
3. Existing zoning: MPUD #6313 (Approved 04-12-06)
4. Existing Land Use Classification: New Town
5. Water service to be provided by Pasco County Utilities.
6. Sewage disposal service to be provided by Pasco County Utilities.
7. Reclaimed water to be provided by Pasco County Utilities.
8. Electrical power to be provided by Withlacoochie River Electric Cooperative.
9. Telephone service to be provided by Verizon.
10. Street lighting to be provided by a street lighting taxing district.
11. Fire protection to be provided by the existing Pasco County Fire Station #22 and on site Fire Hydrants.
12. The site is currently pasture land; existing upland vegetation consists of Bahia grass, palmetto, and scattered pines.
13. Predominant soil types on-site consist of Eaugallie fine sands within upland areas; Palmetto-Zephyr-Sellers complex in the transitional areas; Chobee soils and Sellers Mucky Loamy fine sands within wetland areas.
14. Recreation areas, conservation areas, and detention ponds will be owned and maintained by the Community Development District. Landscape easements along collector and arterial roadways will be dedicated to the Community Development District for maintenance. Retention/detention ponds shall maintained by the C.D.D.
15. Detention ponds to be within drainage easements dedicated to the C.D.D..
16. Contours shown are based on National Geodetic Vertical Datum of 1929.
17. Proposed rights-of-way for local streets shall be a minimum of fifty (50) feet.
18. All roadway standards to comply with the Manual of Uniform Minimum Standards, State of Florida.
19. All water and wastewater facilities to be installed in compliance with Pasco County Standards for design and construction of water and wastewater facilities.
20. All utility lines shall be installed underground.
21. Project lies within Flood Zone '"A" & "X" as shown on FIRM Panel No. 120230 0250 E, revised September 30, 1992.
    Lines shown have been digitally translated from Q3 FLOOD DATA supplied by FEMA NATIONAL FLOOD INSURANCE PROGRAM, dated 1996.
22. Sidewalks will be provided in accordance with the Sidewalk Plan.
    Unless otherwise shown, all sidewalks shall be five (5) feet wide, 4½" thick concrete, and 3000 p.s.i.
23. All easements to be a minimum of five (5) feet in width.
24. Medians and roadside clear zones shall be sodded or seeded & mulched.
25. All landscape and sodded areas along collector roads will be irrigated, if applicable.
26. A minimum of 16" of sod strip will be provided along all roadways per Pasco County requrements.
27. There shall be a minimun of 25' of pavement frontage for all lots.

OWNER'S INSTRUCTIONS FOR MAINTENANCE AND INSPECTION OF STORMWATER FACILITIES

The entire stormwater system should be inspected on at least a semi-annual basis. This should include a visual inspection of the pond, pond banks, bleed-down orifices, other control structures, and discharge pipes. These should be kept free of debris and cleaned on a frequency as required to keep them functional, as designed. Mowing/clearing around the structures may be required to prevent vegetation from clogging them.

Wetland plants, if intentionally installed, should be monitored and maintained as required on the approved construction plans. Areas of littoral shelving, which are required to be vegetated but not intentionally planted, should not be cleared of the wetland plants. These areas should have as high a plant coverage as possible, for maximum water filtration.

Sediment sumps, if designed and installed, should have sediment removed as necessary to allow them to efficiently remove suspended particles. They should be re-dug to the original design specifications, if silted in.

For percolation treatment ponds/swales, the owner of the facility shall inspect the pond bottom periodically after heavy rainfall events to check for persistent ponding or pooling of water. All large debris shall be removed and disposed of elsewhere. If prolonged ponding persists, i.e., in excess of 72 hours, the owner shall rake or scarify the surface. If required, the soil in the area of ponding shall be removed and replaced with clean sandy, non-cohesive soils.

Please check the construction plans to see if written reports on monitoring or plant survival rates are required to be sent to any reviewing agencies. Written notes should always be kept which describe maintenance activities undertaken during each inspection.

Specific conditions of all permits may require additional maintenance activities above and beyond those outlined above. Please be aware of all permit conditions as issued by regulatory agencies to ensure permit compliance.

Pond/Lake Excavation Note

No excavation shall extend below the permitted design depths/elevations shown on the drawings, unless additional testing supports otherwise; and no lower semi-confining unit clayey soil material and/or no limestone materials shall be excavated, regardless if these materials are encountered within the permitted excavation depths/elevations. If any lower semi-confining unit clayey soil materials or limestone materials are encountered above the permitted depths/elevations, then excavation operations shall cease in the general area and the Engineer of Record shall be notified immediately.

CONNERTON VILLAGE TWO PARCEL 213

DESCRIPTION: A parcel of land lying in Section 25, Township 25 South, Range 18 East, Pasco County, Florida and being more particularly described as follows:

Commence at the Southeast corner of the Southwest 1/4 of said Section 25, said point also being on the North boundary of WILDERNESS LAKE PRESERVE – PHASE III, according to the plat thereof as recorded in Plat Book 53, Pages 102 through 112, inclusive, of the Public Records of Pasco County, Florida, and said point also being the POINT OF BEGINNING, run thence along the South boundary of said Southwest 1/4 of Section 25 and said North boundary of WILDERNESS LAKE PRESERVE – PHASE III, N.89°27'57"W., 1320.57 feet to the Southeast corner of GROVES – PHASE II, according to the plat thereof as recorded in Plat Book 48, Pages 23 through 35, inclusive, of the Public Records of Pasco County, Florida; thence along the Easterly boundary of said GROVES – PHASE II, the following two (2) courses: 1) N.26°39'38"W., 740.55 feet;
2) N.64°26'20"W., 629.71 feet; thence continue along said Easterly boundary of GROVES – PHASE II and the Easterly boundary of GROVES – PHASE IV, according to the plat thereof as recorded in Plat Book 55, Pages 49 through 61, inclusive, of the Public Records of Pasco County, Florida, N.62°51'49"E., 1014.97 feet; thence continue along said Easterly boundary of GROVES – PHASE IV, N.20°32'44"E., 550.68 feet to a point on the Southerly boundary of CONNERTON VILLAGE TWO PARCEL 210, according to the plat thereof as recorded in Plat Book 59, Pages 56 through 72, inclusive, of the Public Records of Pasco County, Florida; thence along said Southerly boundary of CONNERTON VILLAGE TWO PARCEL 210, S.74°00'00"E., 1005.21 feet to a point on the Westerly boundary of CONNERTON VILLAGE TWO PARCEL 211, according to the plat thereof as recorded in Plat Book 58, Pages 56 through 80, inclusive, of the Public Records of Pasco County, Florida; thence along said Westerly boundary of CONNERTON VILLAGE TWO PARCEL 211, the following twenty-two (22) courses: 1) S.20°00'00"W., 317.30 feet;
2) S.70°00'00"E., 1.09 feet to a point of curvature;
3) Southeasterly, 29.67 feet along the arc of a curve to the right having a radius of 20.00 feet and a central angle of 85°00'00" (chord bearing S.27°30'00"E., 27.02 feet) to a point of tangency; 4) S.15°00'00"W., 7.68 feet;
5) S.75°00'00"E., 50.00 feet to a point on a curve; 6) Northeasterly, 32.63 feet along the arc of a curve to the right having a radius of 20.00 feet and a central angle of 93°29'03" (chord bearing N.61°44'31"E., 29.13 feet) to a point of reverse curvature; 7) Easterly, 92.40 feet along the arc of a curve to the left having a radius of 525.00 feet and a central angle of 10°05'03" (chord bearing S.76°33'29"E., 92.28 feet); 8) S.08°24'00"W., 56.88 feet; 9) S.15°00'00"W., 67.98 feet; 10) S.78°15'30"E., 56.16 feet;
11) S.87°00'00"E., 53.08 feet;
12) N.84°24'00"E., 53.08 feet; 13) N.76°58'10"E., 53.55 feet;
14) S.14°00'00"E., 121.00 feet; 15) S.76°00'00"W., 6.99 feet;
16) S.14°00'00"E., 50.00 feet to a point on a curve;
17) Southeasterly, 35.55 feet along the arc of a curve to the right having a radius of 20.00 feet and a central angle of 101°49'59" (chord bearing S.53°05'01"E., 31.05 feet);
18) N.87°49'59"E., 50.00 feet to a point on a curve;
19) Northerly, 18.22 feet along the arc of a curve to the left having a radius of 625.00 feet and a central angle of 01°40'12" (chord bearing N.03°00'08"W., 18.22 feet) to a point of reverse curvature; 20) Northeasterly, 27.87 feet along the arc of a curve to the right having a radius of 20.00 feet and a central angle of 79°50'14" (chord bearing N.36°04'53"E., 25.67 feet) to a point of tangency;
21) N.76°00'00"E., 319.66 feet; 22) SOUTH, 1114.67 feet to a point on the aforesaid North boundary of WILDERNESS LAKE PRESERVE PHASE III, said point also being on the South boundary of the Southwest 1/4 of the Southeast 1/4 of said Section 25; thence along said North boundary of WILDERNESS LAKE PRESERVE PHASE III and said South boundary of the Southwest 1/4 of the Southeast 1/4 of Section 25, N.89°28'35"W., 529.43 feet to the POINT OF BEGINNING.

Containing 75.151 acres, more or less.

CONSTRUCTION NOTES:

1. Prior to construction, the Contractor shall obtain from the Engineer or Owner a copy of all pertinent permits related to this project. It is the Contractor's responsibility to assure that all construction activities are in compliance with the conditions of all permits and approvals. Contractor is also responsible for having his dewatering plan approved by SWFWMD.
2. All construction, materials and workmanship are to be in accordance with Pasco County Land Development Code and DOT Specifications, latest editions.
3. Grass and mulch, or solid sod, all areas in existing rights-of-way disturbed by construction. In the proposed rights-of-way a 16" wide area behind the back of curb shall be solid sodded. The remainder of the proposed rights-of-way to be seeded and mulched if the slope is greater than 6:1.
4. Contractor is to coordinate all work within, but not limited to Pasco County rights-of-way with utility companies in order to prevent damage to utility lines and making of adjustments to same, if required.
5. (For Miami, Valley, Type "V", etc. Gutter Type Sections Only) Prior to curb inlet construction, the Engineer shall lay out the back of the curb in the vicinity of the respective inlet for alignment and grade, and the Contractor shall construct the inlet allowing for an 18" concrete throat between the back of the curb and the face of the inlet. The top of the inlet shall be constructed to an elevation of 3/8" above the top of curb. Any inlets constructed incorrectly by deviating from this sequence of inlet construction shall be the sole responsibility of the Contractor and no additional payment shall be made or allowed for removing and/or correcting the inlet.
6. Suitable fill obtained through excavation of streets and detention ponds shall be placed on lots and adjacent land in accordance with the Master Drainage and Grading Plan as directed by the Engineer.
7. Sod/Seed & Mulch shall be placed in accordance with applicable City/County standards as well as in accordance with standard and specific conditions in the SWFWMD permit, if applicable. At a minimum this shall include sodding of all pond embankments of a slope 4:1 or greater to the NW line, as well as seeding and mulching of the balance of the pond tracts (including pond berms, excluding the area below NW), sodding at a minimum of 16" from the back of curb, and seeding and mulching of any project area with a slope of 4:1 or steeper.
8. Roadway underdrain has been located on these plans to ensure adequate base protection. Prior to curb construction, the Geotechnical Engineer shall review the predesign borings and, along with their field inspection, make a recommendation regarding additional underdrain requirements.
9. Site clearing shall be performed per the approved construction plans and in accordance with Pasco County Land Development Code. Installation and maintenance of the required barricading and erosion control shall be the responsibility of the site development contractor unless otherwise designated.
10. Prior to beginning construction, Contractor shall expose all existing utility inverts to which a tie-in is proposed and have Engineer verify the elevation and adequacy of these inverts.
11. All subsurface construction shall comply with the "Trench Safety Act." The Contractor shall ensure that the method of trench protection and construction is in compliance with the Occupational Safety and Health Administration (OSHA) regulations.
12. Siltation accumulations greater than the lesser of 12 inches or one-half the depth of the siltation barrier shall be immediately removed and placed in upland areas.
13. During land alteration and construction activities, it shall be unlawful to remove vegetation by grubbing or to place soil deposits, debris, solvents, construction material, machinery or other equipment of any kind within the dripline of a tree to remain on the site unless otherwise approved by the County.
14. All erosion control installation and installation coordination shall be the responsibility of the Contractor. Heidt Design L.L.C., if contracted by the Owner, will stake the alignment of the proposed erosion control and shall limit its responsibility and coordination at that point. Be advised that the construction approval and maintenance of the erosion control shall be the sole responsibility of the Site Contractor.

NOTE:
THE DISTRICT IS NOT, BY THIS AUTHORIZATION, APPROVING ANY PROPOSED FUTURE WETLAND OR SURFACE WATER IMPACT, ROADWAY ALIGNMENTS, OR LOT CONFIGURATIONS IN OTHER PARCELS OR PHASES. WHEN APPLICATIONS FOR FUTURE PHASES ARE SUBMITTED, THE DISTRICT WILL EVALUATE THE QUALITY OF THE WETLAND OR SURFACE WATER BEING IMPACTED AND THE PROPOSED MITIGATION.

TREE BARRICADE DETAIL

SPECIFICATIONS FOR DESIGN AND INSTALLATION OF TRAFFIC CONTROL DEVICES ON COUNTY ROADS

1) Purpose:

These specifications have been developed to provide developers with a uniform system for installation of traffic control devices on the County road system. A uniform system provides for reduced maintenance costs and a high standard of visibility for drivers. All required traffic control devices shall be installed by the developer of the project.

2) Florida State Statute 316.0745:

2.1) Any and all traffic control devices installed on the County road system shall conform to Florida State Statute 316.0745, Uniform Signals and Devices.

2.2) This statute requires that all devices conform to Florida Department of Transportation (FDOT) Specifications. The FDOT has adopted the Federal Manual on Uniform Traffic Control Devices as the standards to be used in the State of Florida.

3) Pavement Markings:

3.1) All pavement markings shall be thermoplastic or preformed tapes; raised pavement markers shall be class "B".

3.2) Pavement markings and raised pavement markers shall be installed on all roads classified other than residential with an ADT greater than 500 vehicles or if other conditions exist that require pavement markings (see M.U.T.C.D. Section 3B-1).

4) Traffic Control Signs:

4.1) All sign blanks shall be of a type currently certified by the FDOT for use in the State of Florida.

4.2) All sign faces shall be High Intensity grade and of a type currently certified by the FDOT for use in the State of Florida.

4.3) All signs shall be no less than the standard size as specified by the Federal Manual on Uniform Traffic Control Devices. No minimum size signing shall be accepted. Larger signs shall be used when required by design, speed, etc.

4.4) Street name signs shall be 6" on local roads, and 9" on collector and arterial roads. Six inch signs shall have 4" series C letters and 9" signs shall have 6" series B letters.

4.5) On roads to be maintained by Pasco County, all signs other than street names shall be date coded with a yellow reflective label affixed to the back of the sign. It will be punched to show month, day and year of installation (See Sample Label). Alternate label designs providing the date code information may be used if a sample is submitted and approved by Pasco County prior to installation.

Sample Label: size 2" x 4"

PASCO COUNTY
WARNING
REMOVAL OF, OR DEFACING ANY TRAFFIC CONTROL DEVICE
IS PUNISHABLE BY FINE AND/OR IMPRISONMENT
REPORT DAMAGE BY CALLING (813) 847-2411
INSTALLED
J F M A M J J A S O N D
10's 20's 30's – 1 2 3 4 5 6 7 8 9
11 12 13 14 15

4.6) All post systems, mounting brackets and hardware shall be of a type currently in use by the Pasco County Public Works Department and currently certified by the Florida Department of Transportation for use in the State of Florida. Alternative systems, etc., shall only be used if approved by the County Engineer.

5) Certification of materials:

5.1) All traffic control devices and materials shall be on the current FDOT approved products list. Proof of certification is required for all traffic control devices.

5.2) A Traffic Control Devices Submittal Data Form shall be submitted for approval prior to installation of any traffic control device. No traffic control device shall be installed until the certification submittal has been approved by the Traffic Operations Division. These forms are available from the Traffic Operations Division. Copies of the approved Traffic Control Devices Submittal Data Form shall be sent to the contractor and the Permitting and Inspections Division.

6) Traffic Control Devices Plan:

6.1) A detailed set of plans for required traffic control devices shall be submitted for all road construction, site development, subdivision, and Right-of-Way Use Permits. These plans shall be in conformance with FDOT design standards. All plans shall be signed and sealed by a registered professional engineer in the State of Florida.

6.2) With the submittal of final plans to the Development Review Division, two additional sets of the traffic control plan portion of the entire plan shall be submitted. These two sets will be forwarded to the Traffic Operations Division.

7. Cost Estimate:

An engineer's cost estimate shall be required for all proposed traffic control devices. The estimate shall be provided in conjunction with the Traffic Control Devices Submittal Data Form (See Section 5.2).

8. Inspection and Acceptance:

8.1) Upon completion of the installation of the traffic control devices, the contractor shall call the Engineering Permitting and Inspections Division for an inspection at (813) 847-8154.

8.2) The inspection shall be made by the Engineering Permitting and Inspection Division within 48 hours (two working days) of the request.

8.3) An inspection report shall be made by the Engineering Permitting and Inspections Division. Copies of the report shall be sent to the contractor.

8.4) No roadway shall be open to the public until all traffic control devices have been inspected and accepted by Pasco County.

DATE	DESCRIPTION	BY
06-19-14	REVISE TITLE BLOCK & OWNER INFO	SDM

REVISIONS

Engineering Business Certificate of Authorization No. 28782
Landscape Architecture Certificate of Authorization No. LC26000405

HEIDT DESIGN
5806-B Breckenridge Parkway
Tampa, Florida 33610
Office: 813-253-5311
Fax: 813-464-7629
www.HeidtDesign.com

DATE:
EDWIN J. ROGERS P.E. NO. 50082
FLORIDA PROFESSIONAL ENGINEER

GENERAL CONSTRUCTION NOTES

JOB NO. CNT-CT-025
DESIGN WERTZ
DRAWN MIDDLETON
DATE 5-14-2007
FILE GN

CONNERTON
VILLAGE TWO
PARCEL 213

PREPARED FOR: HAYMAN WOODS, L.L.C.

Elevations based on National Geodetic Vertical Datum 1929 (NGVD 29)
Conversion from NGVD 29 to NAVD 88 = –0.85 Feet

SHEET 2 OF 35 SHEETS

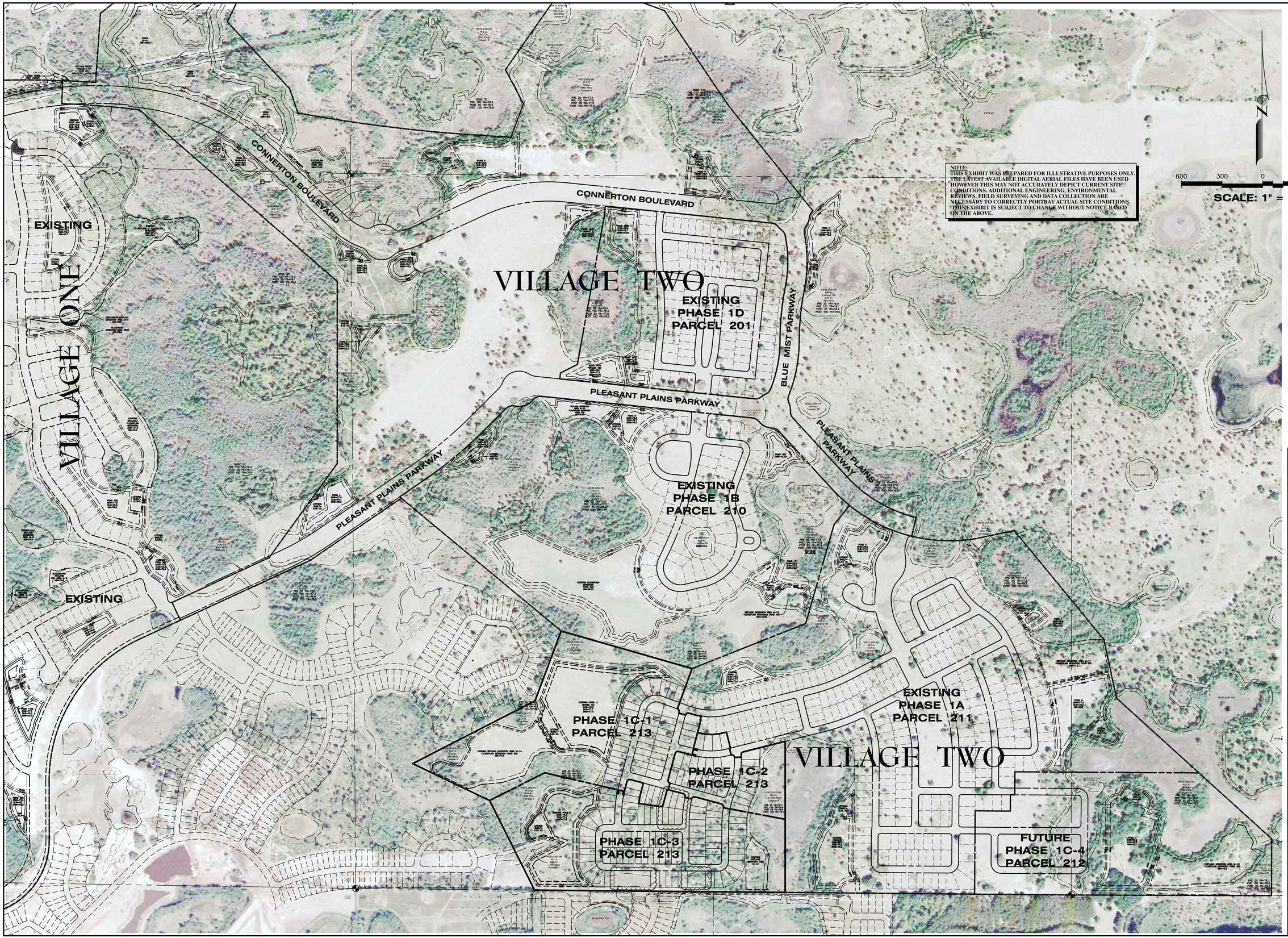

R:\CONNERTON\HWL - CONNERTON\PARCEL 213\ENGINEERING\ASP.DWG-3 OF 35 2015/07/28 4:56 PM BRYANT BOYLES

AERIAL SITE PLAN

CONNERTON
VILLAGE TWO
PARCEL 213

PREPARED FOR: HAYMAN WOODS, L.L.C.

Elevations based on National Geodetic Vertical Datum 1929 (NGVD 29)
Conversion from NGVD 29 to NAVD 88 = -0.85 Feet

SHEET 3 OF 35 SHEETS

JOB NO. HWL-CT-1070
DESIGN WERTZ
DRAWN MIDDLETON
DATE 5-14-2007
FILE *Asp

Engineering Business Certificate of Authorization No. 28782
Landscape Architecture Certificate of Authorization No. LC26000405

HEIDT DESIGN
5806-B Breckenridge Parkway
Tampa, Florida 33610
Office: 813-253-5511
Fax: 813-466-7629
www.HeidtDesign.com

DATE: EDWIN J. ROGERS P.E. NO. 50082
FLORIDA PROFESSIONAL ENGINEER

DATE	DESCRIPTION	BY
07-28-15	REVISE PH 1C-3 LAYOUT	BAB
06-19-14	REVISE TITLE BLOCK & OWNER INFO	SDM

REVISIONS

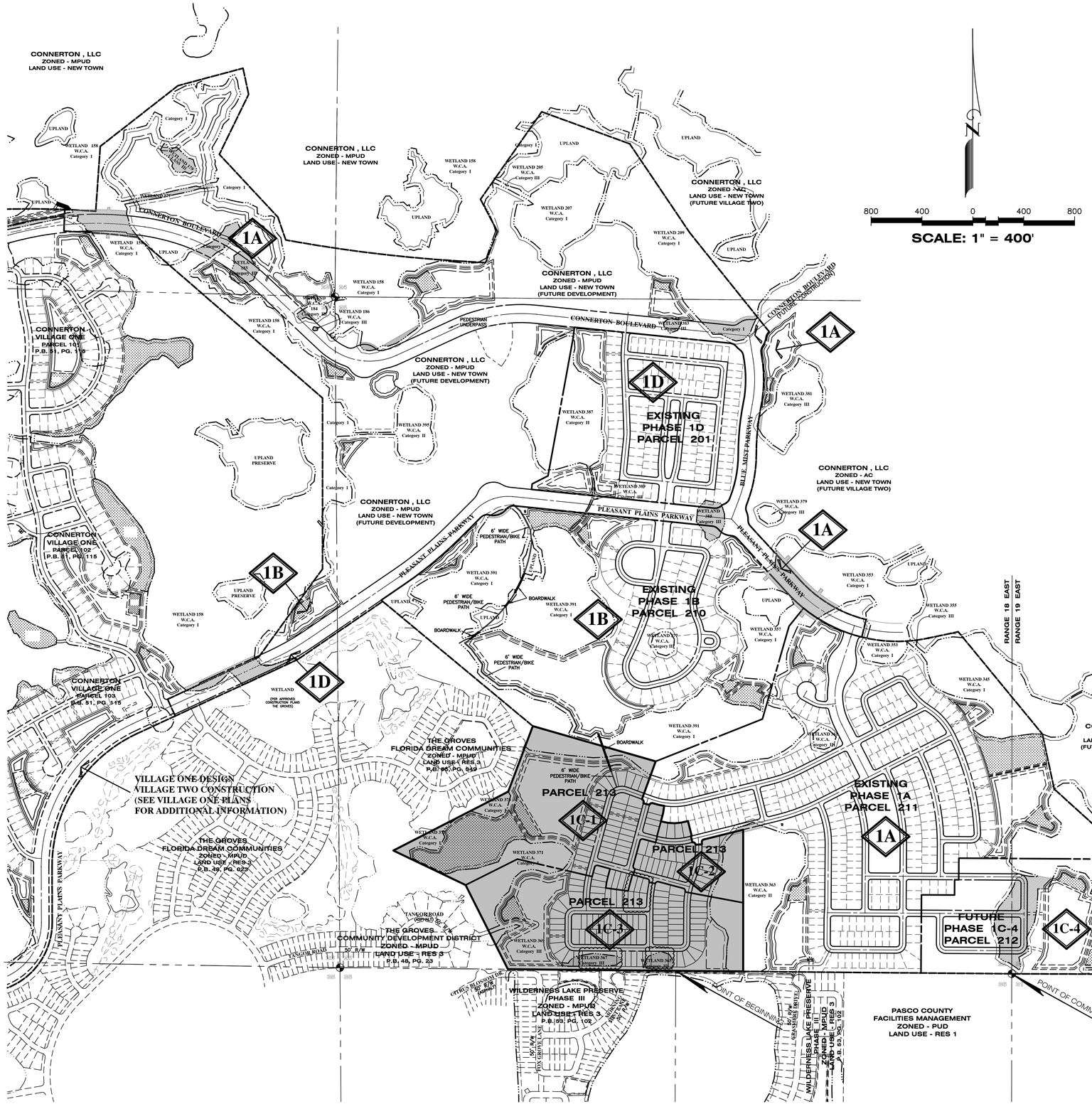

NOTES:

1. Owner/Developer: Hayman Woods, L.L.C.
   2100 McKinney Avenue
   Dallas, Texas 75201
   (214) 302-0056
   Contact Person: Adam Krug
2. Engineer: Heidt Design L.L.C.
   5806-B Breckenridge Parkway
   Tampa, Florida 33610
   (813) 253-5311
   Contact Person: Ed Rogers
   Surveyor: GeoPoint Surveying, Inc.
   1403 E. 5th Avenue
   Tampa, Florida 33605
   (813) 248-8888
   Contact Person: David Williams
3. Existing zoning: MPUD #6313 (Approved 04-12-06)
4. Existing Land Use Classification: New Town
5. The ammended & restated Development Order was approved on March 22, 2005 (DRI No. 233)
   The ammended MPUD zoning petition #6313 was approved on April 12, 2006.
6. Water service to be provided by Pasco County Utilities.
7. Sewage disposal service to be provided by Pasco County Utilities.
8. Electrical power to be provided by Withlacoochee River Electric CO-OP.
9. Telephone service to be provided by Verizon Communications.
10. Gas service to be provided by Clearwater Gas Systems.
11. Street lighting to be provided by a street lighting taxing district throughout the development.
12. Fire protection to be provided by the existing Pasco County Fire Station #22, located near US 41 and SR 52.
    Fire hydrants to be provided on site.
13. The uplands are actively grazed bahia pasture. The wetlands are cypress swamps and grassy marshes.
14. Minimum square footage of dwelling units is 1,000 s.f.
15. Predominant soil types on-site consist of EauGallie fine sands within upland areas; Palmetto-Zephyr-Sellers complex in the transitional areas; Chobee soils and Sellers Mucky Loamy fine sands within wetland areas.
16. The Association or CDD shall provide for the maintenance of all open space, drainage areas, common areas, buffer areas, preservation/conservation areas, recreation areas, wildlife corridor and crossing (unless otherwise approved by Pasco County), and other special purpose areas by the said Association or CDD.
17. Detention ponds to be within drainage easements dedicated to the CDD for maintenance.
18. Contours shown are based on National Geodetic Vertical Datum of 1929.
19. Proposed rights-of-way for local streets shall be a minimum of fifty (50) feet.
20. All roadway standards to comply with the Manual of Uniform Minimum Standards, State of Florida.
21. All water and wastewater facilities to be installed in compliance with Pasco County Standards for design and construction of water and wastewater facilities.
22. All utility lines shall be installed underground.
23. Project lies within Flood Zone "A" & "X" as shown on FIRM Panel No. 12023O 0250 E, revised September 30, 1992. Lines shown have been digitally translated from Q3 FLOOD DATA supplied by FEMA NATIONAL FLOOD INSURANCE PROGRAM, dated 1996.
24. A minimum 16" strip of sod will be provided along all roadways per Pasco County requirements.
25. Corner lots will be a minimum of ten (10) feet greater in width than standard lots.
26. Wetland setbacks from SWFWMD wetlands shall be a minimum of 15' with an average of 25' as per ERP regulations.
27. All roadways to be publicly owned.
28. The 100 year base flood elevation for this project has been modeled in the stormwater master plan and varies between EL. 76.2 and EL. 78.9. See 100 year floodplain encroachment maps in these construction plans (Sheet 1 of 1).
29. All landscape and sodded areas along collector road will be irrigated.
30. This project will comply with the new Pasco County Tree Protection ordinance No. 01-017 and Pasco County Landscape and Irrigation ordinance No. 02-04 and any subsequent amendments.
31. This project shall be subject to the Pasco County New Development Fair Share Contrabution for Road Improvements Ordianace and Shool Impact Fee Ordinance.
32. All construction work, including road, drainage and utilities, shall be constructed in accordance with Pasco County design standards and tested in compliance with the Pasco County Engineering Service Department Testing Specifications for construction of roads, storm drainage and utilities
33. All residential lots shall have a minimum access width of 25 feet along street.
34. If during construction activities; any evidence of historic resources including, but not limited to aboriginal or historic pottery, prehistoric stone tools, bone or shell tools, historic trash pits or historic building foundations are discovered, work shall come to an immediate stop, and the Florida Dept. of Historic Resources (State Historical Preservation Office) and Pasco County shall be notified within two working days of the resources found on site.
35. Prior to any clearing or grubbing associated with site plan an Incidental Take Permit from the Florida Fish and Wildlife Conservation Commission shall be submitted to the Pasco County DRD.
36. If during the construction activities any evidence of the presence of State and Federally protected plant and/or animal species are discovered, work shall come to an immediate stop and Pasco County shall be notified within two working days of the plant and/or animal species found on site.
37. The development planned within Connerton Village Two Phase One will be located in the upper reaches of the Five Mile Creek Drainage Basin. The proposed drainage system will collect, attenuate and provide treatment for the projected runoff generated by the development. The system of interconnected facilities (stormwater drainage pipes, attenuation ponds with littoral zones for water quality treatment, existing and created wetlands) has been designed to meet the minimum technical standards of Pasco County and the Southwest Florida Water Management District. Historical drainage basin patterns will be generally adhered to where practical to accommodate off-site stormwater discharges and stages from adjacent properties. The proposed stormwater drainage system will be owned and maintained by the Connerton West Community Development District.
38. All Post-Development wetlands shall be incorporated in tracts as "Wetland Conservation Areas", designated on this plan as "W.C.A.".

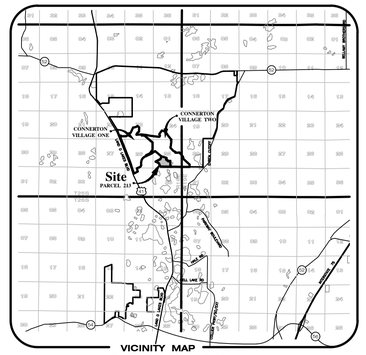

VICINITY MAP
SECTION 25, TOWNSHIP 25 SOUTH, RANGE 18 EAST
PASCO COUNTY, FLORIDA

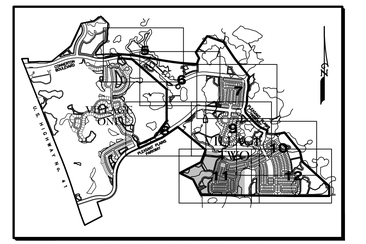

SHEET INDEX KEY MAP

LEGEND

1C-2 = PHASE

NOTE:
PRELIMINARY PLAN/CONSTRUCTION PLAN MODIFICATION CONTAINED HEREIN IS INTENDED TO REVISE THE CURRENT APPROVALS FOR PARCEL 213 ONLY.
THE EARTHWORK AND WETLAND IMPACTS (365A AND 367A) HAVE BEEN COMPLETED AS OF THE DATE OF THIS SUBMITTAL.

DATE	DESCRIPTION	BY
07-28-15	REVISE PH 1C-3 LAYOUT	BAB
06-19-14	REVISE TITLE BLOCK & OWNER INFO	SUM

REVISIONS

OVERALL PRELIMINARY PLAN

CONNERTON VILLAGE TWO PARCEL 213

JOB NO. HWL-CT-1070
DESIGN WERTZ
DRAWN MIDDLETON
DATE 5-14-2007
FILE *PPkey

PREPARED FOR: HAYMAN WOODS, L.L.C.

Elevations based on National Geodetic Vertical Datum 1929 (NGVD 29) Conversion from NGVD 29 to NAVD 88 = -0.55 Feet

SHEET 4 OF 35 SHEETS

HEIDT DESIGN

Engineering Business Certificate of Authorization No. 31052
Landscape Architecture Certificate of Authorization No. LC26000465

5806-B Breckenridge Parkway
Tampa, Florida 33610
Office: 813.253.5311
Fax: 813.253.5711
www.HeidtDesign.com

DATE:
EDWIN J. ROGERS P.E. NO. 50082
FLORIDA PROFESSIONAL ENGINEER

R:\CONNERTON\HWL - CONNERTON\PARCEL 213\ENGINEERING\PPACT.DWG-4 OF 35 2015/07/28 4:56 PM BRYANT BOYLES

CURVE DATA TABLE

NO.	RADIUS	DELTA	ARC	TANGENT	CHORD	BEARING
23	20.00	79°50'14"	27.87	16.73	25.67	N.36°04'53"E.
24	625.00	01°40'12"	18.22	9.11	18.22	N.03°00'08"W.
25	20.00	101°49'59"	35.55	24.62	31.05	S.53°05'01"E.
26	525.00	10°05'03"	92.40	46.32	92.28	S.76°33'29"E.
27	20.00	93°29'03"	32.63	21.25	29.13	N.61°44'31"E.
28	20.00	85°00'00"	29.67	18.33	27.02	S.27°30'00"E.

SCALE: 1" = 100'

DIAMONTE DRIVE
50' R/W

THE GROVES
FLORIDA DREAM COMMUNITIES
ZONED - MPUD
LAND USE - RES 3
P.B. 55, PG. 049

WETLAND 373
W.C.A.
0.73 Ac.
(This Plan)
Category I

WETLAND 375
W.C.A.
0.94 Ac.
(This Plan)
Category I

EXISTING WETLAND MITIGATION AREA M-14
"FLOODPLAIN" MITIGATION POND 200
NW=77.3

LITTORAL SHELF = 0.59 AC.

WETLAND 391
W.C.A.
2.62 Ac.
(This Plan)
Category I

WETLAND 391
W.C.A.
Category I
PRE 25 YR=77.6
PRE 100 YR=77.7
POST 25 YR=76.9
POST 100 YR=76.7

EXISTING VILLAGE TWO PHASE 1B PARCEL 210 P.B. 59, PG. 056

EXISTING VILLAGE TWO PHASE 1A PARCEL 211 P.B. 56, PG. 056

VILLAGE TWO PHASE 1C-1 PARCEL 213

EXISTING POND L1
(PHASE 1A)
DHW=79.3
DLW=77.7
DNW=77.4

EXISTING POND L2
DHW=79.3
DLW=77.7
DNW=77.4

PHASE 1C-1
PARCEL 213

PHASE 1C-2
PARCEL 213

PHASE 1C-3
PARCEL 213

EXISTING VILLAGE TWO PHASE 1A PARCEL 211

TRACT "B-4"

TRACT "B-5"

TRACT "L-11"

TRACT "L-12"

TRACT "L-13"

TRACT "L-14"

TRACT "P-1"

TRACT "P-7" POCKET PARK (0.75 Ac.)

TRACT "P-7A" POCKET PARK (0.38 Ac.)

TRACT "B-4" (LANDSCAPE EASEMENT)

SOUTHERN CHARM DRIVE

FAIRE FROST LANE

STARRY EYES WAY

WISTFUL YEARN DRIVE

SEAGARDEN LANE

TUNDRA HORIZON LANE

DILLOWY HUNT DRIVE

TYPE "3" STREET

TYPE "4" STREET

SANITARY SEWER PUMP STATION

PREVIOUSLY APPROVED WETLAND IMPACT AREA 363A (0.24 AC.)

WETLAND 363
W.C.A.
(4.41 This Plan)
Category II
PRE 25 YR=78.7
PRE 100 YR=78.9
POST 25 YR=78.6
POST 100 YR=79.1

EXISTING WETLAND MITIGATION AREA M-16

LITTORAL SHELF = 0.42 AC.

TRACT "B-5" EXISTING POND K
DHW=80.2
DLW=78.6
DNW=78.2

20' WIDE STABILIZED ACCESS

ACCESS TO WILDERNESS LAKES

WETLAND 371
W.C.A.
5.64 Ac.
(This Plan)
Category I

TRACT "B-4"
EXISTING POND M
DHW=79.3
DLW=77.7
DNW=77.3

WETLAND 369
W.C.A.
0.26 Ac.
(This Plan)
Category I

THE GROVES
COMMUNITY DEVELOPMENT DISTRICT
ZONED - MPUD
LAND USE - RES 3
P.B. 48, PG. 23

TANGOR ROAD (ASPHALT)
50' R/W

CITRUS BLOSSOM DRIVE (ASPHALT)
50' R/W

WILDERNESS LAKE PRESERVE
PHASE III
ZONED - MPUD
LAND USE - RES 3
P.B. 53, PG. 102

FOX GROVE LANE
50' R/W

MORNING MIST LANE
50' R/W

WETLAND 433

PREVIOUSLY COMPLETED WETLAND IMPACT AREA 367A - (0.79 AC.) CATEGORY III

PREVIOUSLY COMPLETED WETLAND IMPACT AREA 365A - (0.60 AC.) CATEGORY III

POINT OF BEGINNING

FLOOD ZONE A
PRE 25 YR=78.0
PRE 100 YR=79.0
POST 25 YR=78.0
POST 100 YR=79.0

FLOOD ZONE X

LEGEND

EXISTING	PROPOSED	
----□----	——■——	STORM DRAINAGE STRUCTURE
+75.00	75.00	ELEVATION
---75---	——75——	CONTOUR
M		MODEL HOME
Wetland "100" I, II or III		WETLAND CLASSIFICATION
		FLOODPLAIN LINE
SWFWL		SWFWMD WETLAND LINE
25'OS		25' OFFSET FROM WETLAND LINE
POND 200 MITIGATION AREA M-8		ALL PONDS & FLOODPLAIN MITIGATION AREAS ARE ALSO DRAINAGE EASEMENTS
		PARCEL BOUNDARY

DATE	DESCRIPTION	BY
07-28-15	REVISE PHASE 1C-3 LAYOUT	BAB
06-19-14	REVISE TITLE BLOCK & OWNER INFO	SDM
10-01-07	CHG LOTS 13/14, BLK.17 PER PASCO DRC	RRR
08-16-07	CHG TRACT LABEL FROM L-29 TO B-4	JMH
07-13-07	PONDS L1/L2 DHW	RRR

REVISIONS

Engineering Business Certificate of Authorization No. 28782
Landscape Architecture Certificate of Authorization No. LC26000405

HEIDT DESIGN
5806-B Breckenridge Parkway
Tampa, Florida 33610
Office: 813-253-5311
Fax: 813-864-7629
www.HeidtDesign.com

DATE:
EDWIN J. ROGERS P.E. NO. 50082
FLORIDA PROFESSIONAL ENGINEER

PRELIMINARY PLAN

JOB NO.	HWL-CT-1070
DESIGN	WERTZ
DRAWN	MIDDLETON
DATE	5-14-2007
FILE	*PP

CONNERTON
VILLAGE TWO
PARCEL 213

PREPARED FOR: HAYMAN WOODS, L.L.C.

Elevations based on National Geodetic Vertical Datum 1929 (NGVD 29)
Conversion from NGVD 29 to NAVD 88 = -0.85 Feet

SHEET 5 OF 35 SHEETS

R:\CONNERTON\WL - CONNERTON\PARCEL 213\ENGINEERING\PP\DWG-5 OF 35 2015/07/28 4:56 PM BRYANT BOYLES

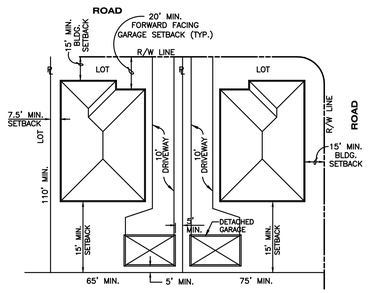

SINGLE FAMILY BUILDING ARRANGEMENT FOR ALL NEIGHBORHOODS (SHOWING REAR DETACHED GARAGE AND DRIVEWAY LOCATION)

N.T.S.

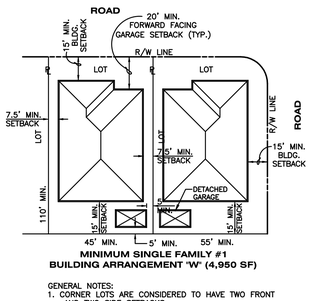

MINIMUM SINGLE FAMILY #1
BUILDING ARRANGEMENT 'W' (4,950 SF)

GENERAL NOTES:
1. CORNER LOTS ARE CONSIDERED TO HAVE TWO FRONT AND TWO SIDE SETBACKS.
2. LOT WIDTH IS MEASURED HORIZONTALLY AT THE FRONT BUILDING LINE.
3. FORWARD FACING GARAGES WILL BE SETBACK A MINIMUM OF 20 FEET.
4. MINIMUM SIDE AND REAR SETBACKS TO DETACHED GARAGES ARE FIVE FEET.
5. MAXIMUM BUILDING HEIGHT = 40 FEET
6. MAXIMUM LOT COVERAGE – 45%

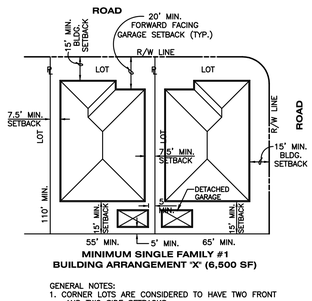

MINIMUM SINGLE FAMILY #1
BUILDING ARRANGEMENT 'X' (6,600 SF)

GENERAL NOTES:
1. CORNER LOTS ARE CONSIDERED TO HAVE TWO FRONT AND TWO SIDE SETBACKS.
2. LOT WIDTH IS MEASURED HORIZONTALLY AT THE FRONT BUILDING LINE.
3. FORWARD FACING GARAGES WILL BE SETBACK A MINIMUM OF 20 FEET.
4. MINIMUM SIDE AND REAR SETBACKS TO DETACHED GARAGES ARE FIVE FEET.
5. MAXIMUM BUILDING HEIGHT = 40 FEET
6. MAXIMUM LOT COVERAGE – 45%

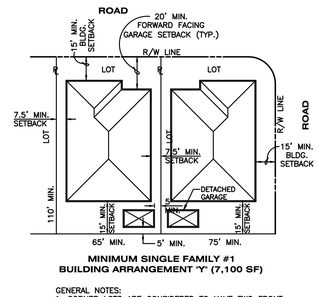

MINIMUM SINGLE FAMILY #1
BUILDING ARRANGEMENT 'Y' (7,100 SF)

GENERAL NOTES:
1. CORNER LOTS ARE CONSIDERED TO HAVE TWO FRONT AND TWO SIDE SETBACKS.
2. LOT WIDTH IS MEASURED HORIZONTALLY AT THE FRONT BUILDING LINE.
3. FORWARD FACING GARAGES WILL BE SETBACK A MINIMUM OF 20 FEET.
4. MINIMUM SIDE AND REAR SETBACKS TO DETACHED GARAGES ARE FIVE FEET.
5. MAXIMUM BUILDING HEIGHT = 40 FEET
6. MAX. LOT COVERAGE = 45% FOR PRINCIPAL STRUCTURES
7. MAX. LOT COVERAGE = ADDITIONAL 20% FOR ACCESSORY STRUCTURES

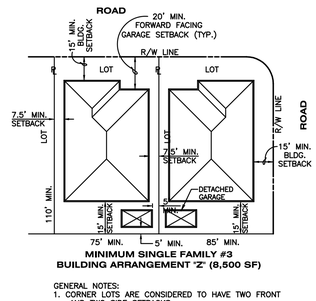

MINIMUM SINGLE FAMILY #3
BUILDING ARRANGEMENT 'Z' (8,500 SF)

GENERAL NOTES:
1. CORNER LOTS ARE CONSIDERED TO HAVE TWO FRONT AND TWO SIDE SETBACKS.
2. LOT WIDTH IS MEASURED HORIZONTALLY AT THE FRONT BUILDING LINE.
3. FORWARD FACING GARAGES WILL BE SETBACK A MINIMUM OF 20 FEET.
4. MINIMUM SIDE AND REAR SETBACKS TO DETACHED GARAGES ARE FIVE FEET.
5. MAXIMUM BUILDING HEIGHT = 40 FEET
6. MAX. LOT COVERAGE = 45% FOR PRINCIPAL STRUCTURES
7. MAX. LOT COVERAGE = ADDITIONAL 20% FOR ACCESSORY STRUCTURES

CONNERTON VILLAGE TWO WETLAND SUMMARY TABLE

WETLAND IDENTIFICATION	ACRES ON SITE	IMPACT ID / ACRES (1)
158	26.11	158A / 1.68 158B / 0.03 158C / 0.01 158D / 0.14 158E / 0.20 158F / 1.80 158G / 0.84
177	0.49	177A / 0.43
179	0.75	179A / 0.75
183	0.92	183A / 0.92
184	0.54	184A / 0.15
186	0.02	186A / 0.02
205	0.23	0
207	7.64	0
209	13.92	209A / 1.14
321	1.68	0
341	17.91	341A / 4.01
345	7.15	0
353	1.29	0
355	0.12	0
357	8.61	357A / 2.51
359	0.09	359A / 0.02
361	0.52	0
363	12.55	363A / 0.24
365	0.60	365A / 0.60
367	0.79	367A / 0.79
369	0.26	0
371	5.64	0
373	0.73	0
375	0.94	0
377	0.59	0
381	0.01	381A / 0.01
383	0.27*	383 / 0.27*
385	1.20*	385A / 1.20*
387	11.58	0
389	0.19	389A / 0.19
391	43.45	391A / 0.14
395	3.37	0
TOTAL ACRES	170.16	18.09

* = ISOLATED WETLAND LESS THAN 0.5 ACRES IN SIZE
(1) = ALL WETLAND IMPACTS HAVE BEEN COMPLETED AS OF THIS SUBMITTAL

CONNERTON VILLAGE 2, PHASE 1 TRACT ACREAGES (AREAS IN ACRES)

TRACT I.D.	TRACT ACREAGE	TRACT USES
B–4	122.76	OPEN SPACE, DRAINAGE & CONSERVATION AREA
B–5	20.76	OPEN SPACE, DRAINAGE & CONSERVATION AREA
B–6	50.03	OPEN SPACE, DRAINAGE & CONSERVATION AREA
B–7	1.45	OPEN SPACE, DRAINAGE & CONSERVATION AREA
B–8	11.55	OPEN SPACE, DRAINAGE & CONSERVATION AREA
P–5	4.26	COMMON AREA, PARK
P–6	1.31	COMMON AREA, PARK
P–7	0.75	COMMON AREA, PARK
P–7A	0.38	COMMON AREA, PARK
P–8	1.02	COMMON AREA, PARK
L–6	0.26	LANDSCAPE & IRRIGATION
L–7	0.34	LANDSCAPE & IRRIGATION
L–8	0.06	LANDSCAPE & IRRIGATION
L–9	0.19	LANDSCAPE & IRRIGATION
L–10	0.18	LANDSCAPE & IRRIGATION
L–11	0.10	LANDSCAPE & IRRIGATION
L–12	0.10	LANDSCAPE & IRRIGATION
L–13	0.10	LANDSCAPE & IRRIGATION
L–14	0.10	LANDSCAPE & IRRIGATION
L–15	0.16	LANDSCAPE & IRRIGATION
L–16	0.14	LANDSCAPE & IRRIGATION
L–17	0.12	LANDSCAPE & IRRIGATION
L–18	1.26	LANDSCAPE & IRRIGATION
L–19	0.62	LANDSCAPE & IRRIGATION
L–20	0.27	LANDSCAPE & IRRIGATION
L–21	0.50	LANDSCAPE & IRRIGATION
L–22	0.07	LANDSCAPE & IRRIGATION
L–30	0.09	LANDSCAPE & IRRIGATION
L–31	0.28	LANDSCAPE & IRRIGATION
L–32	0.12	LANDSCAPE & IRRIGATION
L–33	0.13	LANDSCAPE & IRRIGATION
L–34	2.34	LANDSCAPE & IRRIGATION
L–35	0.33	LANDSCAPE & IRRIGATION
L–36	0.11	LANDSCAPE & IRRIGATION
L–37	0.14	LANDSCAPE & IRRIGATION
L–38	0.11	LANDSCAPE & IRRIGATION
L–39	0.12	LANDSCAPE & IRRIGATION
Z–1	0.03	PUMP STATION
Z–2	0.03	PUMP STATION

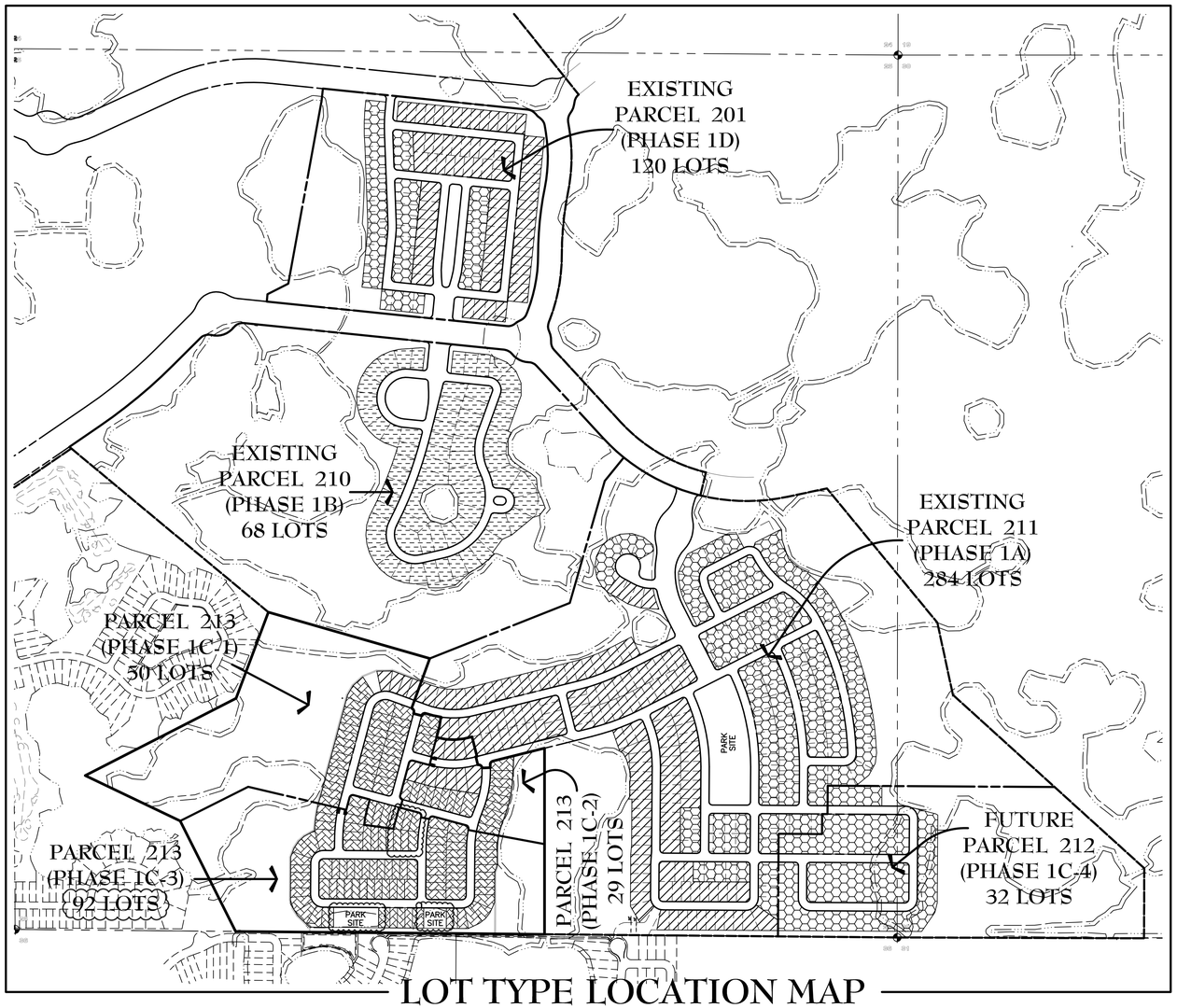

LOT TYPE LOCATION MAP

PASCO COUNTY WETLAND CATEGORY TABLE

CATEGORY	ACREAGE
I	129.22
II	34.73
III	6.21
TOTAL	170.16

CONNERTON VILLAGE 2 PHASES 1A-1D LOT TYPES

PHASE IDENTIFICATION	PARCEL IDENTIFICATION	LOT TYPE (WIDTH) 45'x110' LOTS ("X")	55'x110' LOTS ("X")	65'x110' LOTS ("Y")	75'x110' LOTS ("Z")	TOTAL LOTS
1D	201	0	74	46	0	120
1B	210	0	0	0	68	68
1A	211	0	144	140	0	284
1C–4	212	0	0	32	0	32
1C–1	213	46	4	0	0	50
1C–2	213	18	11	0	0	29
1C–3	213	92	0	0	0	92
	TOTAL	156	233	218	68	675

LEGEND

- BUILDING ARRANGEMENT "W" (45'x 110' LOTS)
- BUILDING ARRANGEMENT "X" (55'x 110' LOTS)
- BUILDING ARRANGEMENT "Y" (65'x 110' LOTS)
- BUILDING ARRANGEMENT "Z" (75'x 110' LOTS)

SITE DATA TABLE

PHASE	PARCEL NO.	UPLAND	WETLAND	TOTAL AC.	UNITS	GROSS DENSITY	NET DENSITY
1A	211	104.37	28.85	133.22	284	2.13	2.72
1B	210	59.93	40.96	100.89	68	0.67	1.13
1C	212	30.53	10.14	40.67	32	0.78	1.05
	213	60.59	15.99	75.15	171	2.28	2.82
1D	201	36.70	5.80	42.50	120	2.82	3.27
TOTAL	TOTAL	292.12	100.31	392.43	675	1.72	2.31

OTHER AREAS	UPLAND	WETLAND	TOTAL AC.	NOTES
COLLECTOR ROADS	45.47	–	45.47	COLLECTOR RDS. TO BE CONST. DURING DEVELOPMENT OF PHASES 1A–1D
FUTURE DEVELOPMENT	109.06	69.85	178.91	MASS GRADING ONLY. DETAILED SITE PLAN TO BE SUBMITTED W/ ANOTHER APPLICATION
TOTAL	154.53	69.85	224.38	

GRAND TOTAL (OVERALL SITE)	446.65	170.16	616.81	INCLUDES ALL PARCELS, COLLECTOR ROADS & FUTURE DEVELOPMENT

DATE	DESCRIPTION	BY
07–28–15	REVISE PH 1C–3 LAYOUT	BAB
06–19–14	REVISE TITLE BLOCK & OWNER INFO	SDM
08–16–07	WETLAND CATEGORY TABLE, TRACT AREAS	JMH

REVISIONS

Engineering Business Certificate of Authorization No. 28782
Landscape Architecture Certificate of Authorization No. LC26000405
HEIDT DESIGN
5806-B Breckenridge Parkway
Tampa, Florida 33610
Office: 813-253-5311
Fax: 813-464-7629
www.HeidtDesign.com

DATE:

EDWIN J. ROGERS P.E. NO. 50082
FLORIDA PROFESSIONAL ENGINEER

PRELIMINARY PLAN NOTES & DETAILS

JOB NO.	HWL–CT–1070
DESIGN	WERTZ
DRAWN	MIDDLETON
DATE	5–14–2007
FILE	PPDETAILS

CONNERTON VILLAGE TWO PARCEL 213

PREPARED FOR: **HAYMAN WOODS, L.L.C.**

Elevations based on National Geodetic Vertical Datum 1929 (NGVD 29)
Conversion from NGVD 29 to NAVD 88 = –0.85 Feet

SHEET 6 OF 35 SHEETS

R:\CONNERTON\YHL – CONNERTON\PARCEL 213\ENGINEERING\PPDETAILS.DWG–6 OF 35 2015/07/28 4:56 PM BRYANT BOYLES

PAVEMENT CONSTRUCTION NOTES:

1. Pavement wearing surface shall be asphaltic concrete of type and thickness shown in detail and shall meet current Department of Transportation Specifications.
2. Pavement base shall be crushed concrete, as designated in plans, and shall be compacted to a minimum thickness as shown.
3. Crushed concrete road base material shall be of uniform quality, free of all organics, steel rebar, asphalt debris, and any other deleterious material.
4. Crushed concrete road base material shall generally conform to the gradation chart for graded aggregate base, FDOT Section 204 and 901, tested at a frequency required by the Governing Agency having jurisdiction. In addition, crushed concrete shall conform to the applicable specifications contained within Pasco County Standards.
5. Crushed concrete base shall have a minimum compacted dry density of 114.0 pcf (per AASHTO T-180), and a minimum Limerock Bearing Ratio (LBR) of 150 (under-tolerance ±5%), tested at a frequency required the Governing Agency having jurisdiction, or in the absence thereof, by minimum FDOT standards.
6. Base single course lifts should not exceed 6-inches (compacted with 8" loose).
7. Crushed concrete road base shall be compacted to a minimum of 100% of Modified Proctor per AASHTO T-180, tested at a frequency required by Governing Agency having jurisdiction., or in the absence thereof, by minimum FDOT standards.
8. Stabilized Subgrade shall be placed and constructed for Type "B" stabilization in accordance with FDOT Section 160 and shall have a minimum LBR 40 or greater. Subgrade shall be compacted to the minimum thickness as shown. Subgrade shall be compacted to a minimum of 98% Modified Proctor per AASHTO T-180.
9. Compacted subgrade (beneath stabilized subgrade if required, or beneath base materials) shall be prepared in accordance with FDOT Index No. 505, latest edition and the project geotechnical report requirements. Embankment fills or natural sands to 24-inches below the bottom of the pavement base (if no stabilized subgrade), or to 24-inches below the bottom of stabilized subgrade, shall be sandy soils (A-3 or SP/SP-SM) with typically 15% fines or less passing the No. 200 sieve, compacted in 12-inch lifts (±) to a minimum of 98% Modified Proctor per AASHTO T-180.
10. All curbs and gutters shall be placed on a foundation of Type "B" stabilized subgrade with a minimum LBR 40 (±5%) which has been compacted to a minimum of 98% Modified Proctor per AASHTO T-180 for a minimum depth of six (6) inches (or twelve (12) inches depending on the Governing Agency having jurisdiction).
11. All Portland Cement Concrete shall have a minimum compressive strength of 3000 p.s.i.
12. Roadway underdrain has been located on these plans to meet the minimum standards of the Governing Agency having jurisdiction
13. Should no underdrain be specified on the plans the Contractor is to include 1,000 linear feet of underdrain at unit prices for bid purposes.
14. All testing referenced above shall, at a minimum, be at the frequency required by the Governing Agency having jurisdiction, or in the absence thereof, by minimum FDOT standards.
15. 10' clear zone shall be provided for type 1 streets and 6' for all other street types with A, E and Miami curb; and 4' clear zone for street types 1, 2, and 3 with FDOT Type F and D curb (LDC 901.6.C.6)

Contractor may propose alternate pavement designs. Structural numbers shall satisfy the minimum required by Pasco County which are 2.34 for local roads and 3.24 for the collector roads. Contractor shall submit any pavement alternatives to Engineer and Pasco County for approval prior to final subgrade preparations.

PASCO COUNTY MINUMUM ROADWAY STRUCTURAL NUMBERS:

1. Local Subdivision Roads SN = 2.34
2. Subdivision Collector Roads SN = 3.50
3. PCCPFRN Collector Roads SN = 3.70
4. PCCPFRN Arterial Roads SN = 4.00

ALTERNATE PAVEMENT DESIGN

Proposed Local Roadway Design: (RESIDENTIAL STREETS)

Layer Coefficients	Thickness
0.44 – Type S–1 Asphalt Surface	1.5"
0.15 – Soil Cement Base (300 psi)	8"
0.04 – Compacted Subgrade (LBR 20 Min.)	12"

SN = (0.44) (1.5") + (0.15) (8") + (0.04) (12")

SN = 2.34

SN $\overline{SN}_o$

2.34 >/= 2.34

Use: 8" Soil–Cement Base with 1.5" Type S–1 Asphalt Surface and 12" Compacted Subgrade (LBR 20 Min.)

PAVEMENT DESIGN

Proposed Local Roadway Design: (RESIDENTIAL STREETS)

Layer Coefficients	Thickness
0.44 – Type S–1 Asphalt Surface	1.5"
0.15 – Crushed Concrete Base (300 psi)	6"
0.08 – Stabilized Subgrade (LBR 40 Min.)	12"

SN = (0.44) (1.5") + (0.15) (6") + (0.08) (12")

SN = 2.52

SN $\overline{SN}_o$

2.52 >/= 2.34

Use: 6" Crushed Conrete Base with 1.5" Type S–1 Asphalt Surface and 12" Stabilized Subgrade (LBR 40 Min.)

ALTERNATE FOR SOIL-CEMENT BASE MATERIAL:

1. Soil-cement mix design shall be provided a minimum 30 days in advance of placement of base material for approval by the Engineer. The soil-cement product shall be in accordance with PCA standards.
2. Soil-cement surface shall be inspected and approved by the Engineer prior to any paving operation.
3. Subgrade for soil-cement shall be prepared in accordance with FDOT Index No. 505, latest edition. Embankment fills or natural sands to 24-inches below the bottom of the pavement base (if no stabilized subgrade), or to 24-inches below the bottom of stabilized subgrade, shall be sandy soils (A-3 or SP/SP-SM) with typically 15% fines or less passing the No. 200 sieve.
4. Subgrade under a soil-cement base shall be proof-rolled to grade, as directed by the Engineer and approved by the Engineer with suitable compaction equipment to achieve a density of ninety-eight (98%) percent Modified Proctor for a depth of twelve (12) inches prior to placing soil-cement base.
5. Subgrade under soil-cement base shall NOT be stabilized unless otherwise directed by Engineer of Record.

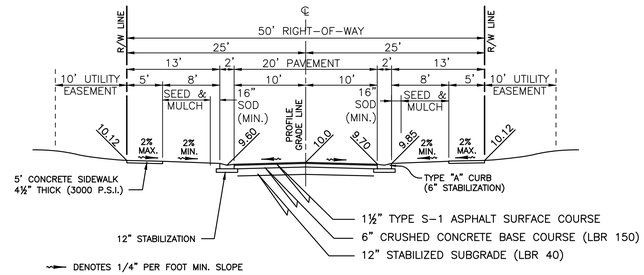

TYPICAL ROADWAY SECTION

50' RIGHT–OF–WAY
(DESIGN SPEED = 15 MPH)
TYPE 4 STREET

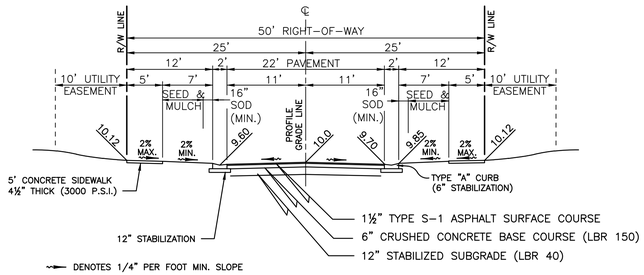

TYPICAL ROADWAY SECTION

50' RIGHT–OF–WAY
(DESIGN SPEED = 15 MPH)
TYPE 3 STREET

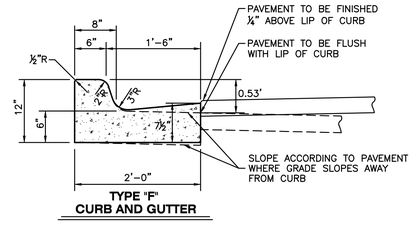

TYPE "F" CURB AND GUTTER

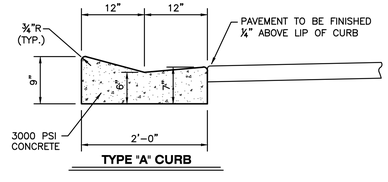

TYPE "A" CURB

DATE	DESCRIPTION	BY
05/28/2015	REVISED TYP SECTION CALCS TEXT	LGB
05/22/2015	REVISED TYP SECTION CALCS TEXT	LGB
11–03–14	REVISED TYPICAL SECTIONS & NOTES	DWS
06–19–14	REVISE TITLE BLOCK & OWNER INFO	SDM

REVISIONS

Engineering Business Certificate of Authorization No. 28782
Landscape Architecture Certificate of Authorization No. LC26000405

HEIDT DESIGN

5806-B Breckenridge Parkway
Tampa, Florida 33610
Office: 813-253-5311
Fax: 813-464-7629
www.HeidtDesign.com

DATE:
EDWIN J. ROGERS P.E. NO. 50082
FLORIDA PROFESSIONAL ENGINEER

TYPICAL ROADWAY SECTIONS

JOB NO. HWL–CT–1070	**CONNERTON VILLAGE TWO PARCEL 213**
DESIGN WERTZ	
DRAWN MIDDLETON	PREPARED FOR: **HAYMAN WOODS, L.L.C.**
DATE 5–14–2007	**Elevations based on National Geodetic Vertical Datum 1929 (NGVD 29)** Conversion from NGVD 29 to NAVD 88 = –0.85 Feet
FILE RS	**SHEET 7 OF 35 SHEETS**

R:\CONNERTON\HWL – CONNERTON\PARCEL 213\ENGINEERING\VS.DWG–7 OF 35 2015/07/28 4:57 PM BRYANT BOYLES

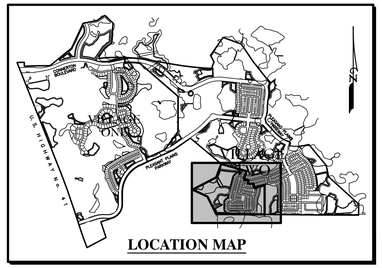

N

SCALE: 1" = 100'

CONNERTON VILLAGE TWO PARCEL 1C WETLAND SUMMARY TABLE		
WETLAND IDENTIFICATION	ACRES ON SITE	NEW IMPACT ID / ACRES
363	4.41	0
365	0.60	365A / 0.60*
367	0.79	367A / 0.79*
369	0.26	0
371	5.64	0
373	0.73	0
375	0.94	0
391	2.62	0.07**
TOTAL ACRES	15.99	1.39

* PREVIOUSLY APPROVED WETLAND IMPACTS
** TEMPORARY IMPACT

WETLAND 391
W.C.A.
2.62 Ac.
(This Plan)
Category I

WETLAND 391
W.C.A.
Category I
PRE 25 YR=77.6
PRE 100 YR=77.7
POST 25 YR=76.9
POST 100 YR=76.7

WETLAND IMPACT (TEMPORARY=0.07± AC.)

DBL. STAKED EROSION CONTROL

BOARDWALK (SEE DETAIL)

FLOATING SILT BARRIER

EXISTING VILLAGE TWO PHASE 1B PARCEL 210 P.B. 59, PG. 056

EXISTING VILLAGE TWO PHASE 1A PARCEL 211 P.B. 58, PG. 056

VILLAGE TWO PHASE 1C-1 PARCEL 213

EXISTING POND L2
DHW=79.3
DLW=77.7
DNW=77.4

EXISTING POND L1 (PHASE 1A)
DHW=79.3
DLW=77.7
DNW=77.4

THE GROVES
FLORIDA DREAM COMMUNITIES
ZONED - MPUD
LAND USE - RES 3
P.B. 55, PG. 049

WETLAND 373
W.C.A.
0.73 Ac.
(This Plan)
Category I
SH=77.40
NP=

PRE 25 YR=78.0
PRE 100 YR=79.0
POST 25 YR=78.0
POST 100 YR=79.0

EXISTING CONTROL STRUCTURE

LITTORAL SHELF = 0.59 AC.

WETLAND 375
W.C.A.
0.94 Ac.
(This Plan)
Category I

EXISTING WETLAND MITIGATION AREA M-14
FLOODPLAIN MITIGATION POND, 200
NW=77.3

PRE 25 YR=78.0
PRE 100 YR=79.0
POST 25 YR=78.0
POST 100 YR=79.0
SH=77.28
NP=76.77

WETLAND 371
W.C.A.
5.64 Ac.
(This Plan)
Category I

THE GROVES
COMMUNITY DEVELOPMENT DISTRICT
ZONED - MPUD
LAND USE - RES 3
P.B. 48, PG. 23

EXISTING POND M
DHW=79.3
DLW=77.7
DNW=77.3

EXISTING CONTROL STRUCTURE

LITTORAL SHELF = 0.52 AC.

WETLAND 369
W.C.A.
0.26 Ac.
(This Plan)
Category I

FLOATING SILT BARRIER

SOUTHERN CHARM DRIVE

FAIRE FROST LANE

STARRY EYES WAY

WISTFUL YEARN DRIVE

SEAGARDEN LANE

SUNLIT HORIZON LANE

BILLOWY JAUNT DRIVE

SWFWL POCKET PARK (0.75 Ac.)

POCKET PARK (0.38 Ac.)

EXISTING VILLAGE TWO PHASE 1A PARCEL 211

SANITARY SEWER PUMP STATION

PREVIOUSLY APPROVED WETLAND IMPACT AREA 363A (0.24 AC.)

VILLAGE TWO PHASE 1C-2 PARCEL 213

WETLAND 363
W.C.A.
(4.41 This Plan)
Category II
PRE 25 YR=78.7
PRE 100 YR=78.9
POST 25 YR=78.6
POST 100 YR=79.1
SH=78.13
NP=76.36

EXISTING VILLAGE TWO PHASE 1A PARCEL 211 P.B. 58, PG. 056

VILLAGE TWO PHASE 1C-3 PARCEL 213

EXISTING WETLAND MITIGATION AREA M-16

CONSTRUCT SWALE W/ 6:1 SIDE SLOPES INV. EL. 77.0

EXISTING POND K
DHW=80.2
DLW=78.6
DNW=78.2

20' WIDE STABILIZED ACCESS

PREVIOUSLY COMPLETED WETLAND IMPACT AREA 367A - (0.79 AC.) CATEGORY III

PREVIOUSLY COMPLETED WETLAND IMPACT AREA 365A - (0.60 AC.) CATEGORY III

WILDERNESS LAKE PRESERVE
PHASE III
ZONED - MPUD
LAND USE - RES 3
P.B. 53, PG. 102

WETLAND 433
SH=77.20
NP=76.11

LEGEND

EXISTING	PROPOSED	
----□----	——■——	STORM DRAINAGE STRUCTURE
	(10)	STRUCTURE NO.
+75.00	75.00	ELEVATION
75	75	CONTOUR
		DIRECTION OF SLOPE
	UD UDCO	UNDERDRAIN WITH CLEANOUT
	▲PZUP-2	EXISTING PIEZOMETER LOCATION
	LB-1 (20') (56.6)	POND BORING LOCATION / EXCAVATION DEPTH / EXCAVATION BOTTOM ELEVATION
		STAKED EROSION CONTROL
SWFWL	SWFWL	SWFWMD WETLAND LINE
25' OS	25' OS	25' OFFSET FROM WETLAND LINE (SHOWN FOR INFORMATIONAL PURPOSES)
		SWFWMD PROJECT LIMITS (34.6 AC.)

NOTE:
SEE MITIGATION DETAIL SHEET FOR MORE INFORMATION.

DATE	DESCRIPTION	BY
07-28-15	REVISE PHASE 1C-3 LAYOUT	BAB
06-19-14	REVISE TITLE BLOCK & OWNER INFO	SDM
10-01-07	CHG LOTS 13/14, BLK.17 PER PASCO DRC	RRR
07-13-07	SWFWMD LIMITS, DHW PONDS L1/L2	RRR

REVISIONS

Engineering Business Certificate of Authorization No. 28782
Landscape Architecture Certificate of Authorization No. LC26000405

HEIDT DESIGN
5806-B Breckenridge Parkway
Tampa, Florida 33610
Office: 813-253-5311
Fax: 813-464-7629
www.HeidtDesign.com

DATE:
EDWIN J. ROGERS P.E. NO. 50082
FLORIDA PROFESSIONAL ENGINEER

MASTER DRAINAGE PLAN

JOB NO.	HWL-CT-1070
DESIGN	WERTZ
DRAWN	MIDDLETON
DATE	5-14-2007
FILE	*MD

CONNERTON
VILLAGE TWO
PARCEL 213

PREPARED FOR: HAYMAN WOODS, L.L.C.

Elevations based on National Geodetic Vertical Datum 1929 (NGVD 29)
Conversion from NGVD 29 to NAVD 88 = -0.85 Feet

R:\CONNERTON\HWL - CONNERTON\PARCEL 213\ENGINEERING\MD\DWG-8 OF 35 2015/07/28 4:57 PM BRYANT BOYLES

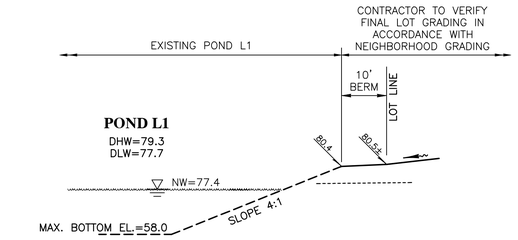

SECTION L1-L1

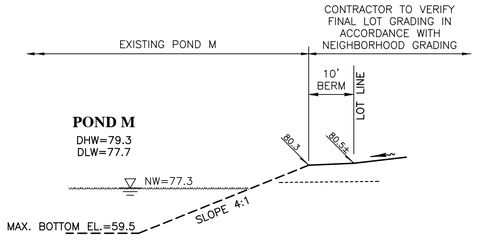

SECTION M-M

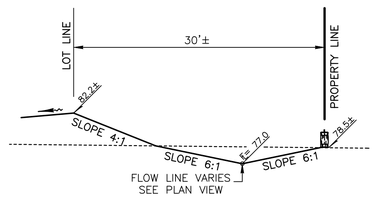

SECTION 364-364

NOTES:
1. ALL SECTIONS ARE NOT TO SCALE.
2. POND BOTTOM ELEVATIONS VARY (SEE MASTER DRAINAGE PLAN FOR MAXIMUM POND BOTTOM ELEVATION. REFER TO SOILS REPORT FOR MORE INFORMATION.)
3. ALL SLOPES ABOVE THE NW ELEVATION STEEPER THAN 5:1 SHALL BE SODDED

	STRUCTURE			LINE						STRUCTURE LOCATION & REMARKS
	NO.	TYPE & SIZE	TOP ELEV.	TYPE	DIAM. INCHES	LENGTH FEET	SLOPE %	INVERT ELEV. UPPER END	INVERT ELEV. LOWER END	FALL IN FEET	NOTE: ALL PVC STORM PIPE SHALL BE A2000 OR APPROVED EQUAL
PHASE 1C-2	333	2'-6" x 4'-0" "2" CURB INLET	80.15	RCP	24	34	0.29	75.40	75.30	0.10	
	334	4'-0" x 4'-0" "2" CURB INLET	80.15	RCP	30	105	0.17	74.80	74.62	0.18	
	335	MANHOLE "P"	80.55	RCP	30	162	0.17	74.62	74.35	0.27	4' DIA.
PHASE 1C-1	335A	4'-0" x 4'-0" "1" CURB INLET	81.00	RCP	30	33	0.11	74.35	74.31	0.04	4' DIA.
	335B	4'-0" x 4'-0" "1" CURB INLET	81.00	RCP	30	55	0.11	74.31	74.25	0.06	
	336	4'-0" x 4'-0" "2" CURB INLET	81.15	RCP	30	92	0.29	74.25	73.98	0.27	
	337	MANHOLE "J"	81.47	RCP	29 X 45	258	0.07	73.98	73.80	0.18	5' DIA.
	338	2'-6" x 4'-0" "1" CURB INLET	80.25	RCP	29 X 45	42	0.24	73.80	73.70	0.10	2'-6"x4'-0" TOP W/ 5' "J" MANHOLE BOTTOM
	339	2'-6" x 4'-0" "1" CURB INLET	80.20	RCP	48	125	0.08	71.10	71.00	0.10	2'-6"x4'-0" TOP W/ 5' "J" MANHOLE BOTTOM
	339A	MANHOLE "J"	88.50	RCP	48	19	0.53	66.50	66.40	0.10	5' DIA.
	339B	MITERED END SECTION									
PHASE 1C-2	340	2'-6" x 4'-0" "1" CURB INLET	80.18	RCP	18	33	0.30	75.97	75.87	0.10	
	341	4'-0" x 4'-0" "1" CURB INLET	80.18	RCP	24	137	0.10	73.70	73.56	0.14	
	342	MANHOLE "P"	81.04	RCP	30	255	0.08	73.06	72.85	0.21	4' DIA.
	345										
	343	2'-6" x 4'-0" "1" CURB INLET	80.35	RCP	18	44	0.23	75.91	75.81	0.10	~~TYPE "F" CURB~~
	344	2'-6" x 4'-0" "1" CURB INLET	80.12	RCP	24	40	0.25	75.31	75.21	0.10	2'-6"x4'-0" TOP W/ 5' "J" MANHOLE BOTTOM
PHASE 1C-1	345	2'-6" x 4'-0" "1" CURB INLET	80.08	RCP	36	241	0.10	72.35	72.10	0.25	2'-6"x4'-0" TOP W/ 5' "J" MANHOLE BOTTOM
	346	MANHOLE "J"	82.03	RCP	36	244	0.12	72.10	71.80	0.30	5' DIA.
	347	2'-6" x 4'-0" "1" CURB INLET	80.47	RCP	36	111	0.09	71.80	71.70	0.10	2'-6"x4'-0" TOP W/ 5' "J" MANHOLE BOTTOM
	352										
PHASE 1C-3	348	2'-6" x 4'-0" "1" CURB INLET	80.08	RCP	24	32	0.31	75.33	75.23	0.10	
	349	4'-0" x 4'-0" "1" CURB INLET	80.14	RCP	24	214	0.08	73.23	73.05	0.18	
	350	MANHOLE "P"	80.24	RCP	24	120	0.08	73.05	72.95	0.10	4' DIA.
	351	MANHOLE "P"	80.73	RCP	30	163	0.06	72.45	72.35	0.10	4' DIA.
	352	2'-6" x 4'-0" "1" CURB INLET	80.15	RCP	29 x 45	36	0.28	70.70	70.60	0.10	2'-6"x4'-0" TOP W/ 5' "J" MANHOLE BOTTOM
	353	2'-6" x 4'-0" "1" CURB INLET	80.10	RCP	42	140	0.07	70.10	70.00	0.10	2'-6"x4'-0" TOP W/ 5' "J" MANHOLE BOTTOM
PHASE 1C-1	354	MANHOLE "J"	80.50	RCP	42	134	0.07	66.90	66.80	0.10	5' DIA.
	354A	MITERED END SECTION									
	355	2'-6" x 4'-0" "1" CURB INLET	80.12	RCP	18	32	0.41	75.91	75.78	0.13	
	356	4'-0" x 4'-0" "1" CURB INLET	80.12	RCP	30	208	0.09	74.78	74.59	0.19	
	357	MANHOLE "P"	80.87	RCP	30	244	0.08	74.59	74.39	0.20	4' DIA.
	358	2'-6" x 4'-0" "1" CURB INLET	80.18	RCP	30	43	0.23	74.39	74.29	0.10	2'-6"x4'-0" TOP W/ 5' "J" MANHOLE BOTTOM
	360										
PHASE 1C-3	359	2'-6" x 4'-0" "1" CURB INLET	80.15	RCP	18	39	0.51	75.94	75.74	0.20	
	360	2'-6" x 4'-0" "1" CURB INLET	80.18	RCP	42	305	0.07	73.29	73.07	0.22	2'-6"x4'-0" TOP W/ 5' "J" MANHOLE BOTTOM
	361	MANHOLE "J"	81.20	RCP	42	285	0.07	73.07	72.88	0.19	5' DIA.
	362	MANHOLE "J"	80.47	RCP	42	57	0.18	72.88	72.78	0.10	5' DIA.
	363	2'-6" x 4'-0" "1" CURB INLET	80.18	RCP	42	35	0.29	72.78	72.68	0.10	2'-6"x4'-0" TOP W/ 5' "J" MANHOLE BOTTOM
	364	2'-6" x 4'-0" "1" CURB INLET	80.14	RCP	48	174	0.06	66.40	66.30	0.10	2'-6"x4'-0" TOP W/ 6' "J" MANHOLE BOTTOM
	364A	MITERED END SECTION									

DATE	DESCRIPTION	BY
07-28-15	REVISE STR 343	SDM
06-19-14	REVISE TITLE BLOCK & OWNER INFO	SDM
07-13-07	SEC. L1 (DHW)	RRR

REVISIONS

Engineering Business Certificate of Authorization No. 28782
Landscape Architecture Certificate of Authorization No. LC26000405

HEIDT DESIGN

5806-B Breckenridge Parkway
Tampa, Florida 33610
Office: 813-253-5311
Fax: 813-464-7629
www.HeidtDesign.com

DATE:

EDWIN J. ROGERS P.E. NO. 50082
FLORIDA PROFESSIONAL ENGINEER

DRAINAGE STRUCTURE DATA / CROSS SECTIONS

JOB NO. HWL-CT-1070	**CONNERTON VILLAGE TWO PARCEL 213**
DESIGN WERTZ	
DRAWN MIDDLETON	PREPARED FOR: **HAYMAN WOODS, L.L.C.**
DATE 5-14-2007	**Elevations based on National Geodetic Vertical Datum 1929 (NGVD 29)** Conversion from NGVD 29 to NAVD 88 = -0.85 Feet
FILE St	**SHEET 9 OF 35 SHEETS**

R:\CONNERTON\HWL - CONNERTON\PARCEL 213\ENGINEERING\ST.DWG-9 OF 35 2015/07/28 4:57 PM BRYANT BOTLES

WETLAND IMPACT
(TEMPORARY=0.07± AC.)

EXISTING VILLAGE TWO PHASE 1B PARCEL 210

VILLAGE TWO PHASE 1C-1 PARCEL 213

EXISTING VILLAGE TWO PHASE 1B PARCEL 210

EXISTING VILLAGE TWO PHASE 1A PARCEL 211

WETLAND 391
W.C.A.
2.62 Ac.
(This Plan)
CLASS I
PRE 25 YR=77.6
PRE 100 YR=77.7
POST 25 YR=76.9
POST 100 YR=76.7

BOARDWALK
(SEE DETAIL)

FLOOD ZONE A

FLOOD ZONE X

EXISTING
POND L2
DHW=79.3
DLW=77.7
DNW=77.4

POND L1
(PHASE 1A)
DHW=79.3
DLW=77.7
DNW=77.4

SOUTHERN CHARM DRIVE

FARE FROST LANE

STARRY EYES WAY

BILLOWAY JAUNT DRIVE

WESTFIELD HEARTH DRIVE

EXISTING VILLAGE TWO PHASE 1A PARCEL 211

EXISTING VILLAGE TWO PHASE 1A PARCEL 213

VILLAGE TWO PHASE 1C-2 PARCEL 213

WETLAND 363
W.C.A.
4.41 Ac.
CLASS II
PRE 25 YR=78.7
PRE 100 YR=78.9
POST 25 YR=78.6
POST 100 YR=79.1

SEE SHEET 11

LEGEND

EXISTING	PROPOSED	
		STORM DRAINAGE STRUCTURE
+75.0	75.00	ELEVATION
75	75	CONTOUR
		DIRECTION OF SLOPE
	50.0	PAD ELEVATION
	75	LOT NUMBER
	A	LOT GRADING TYPE
		STAKED EROSION CONTROL/ WETLAND SETBACK
SWFWL	SWFWL	SWFWMD WETLAND LINE
		FLOOD LINE (F.E.M.A.)
		SWFWMD PROJECT LIMIT (34.6 AC.)
	*	LOTS REQUIRING 79-G TESTING (SEE NOTE 3)

N

100 50 0 50 100

SCALE: 1" = 50'

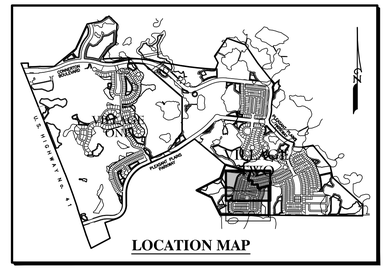

LOCATION MAP

NEIGHBORHOOD GRADING PLAN NOTES:

1. Pad grades shown are minimum grades. Elevations of adjoining lots, existing trees, and other field conditions may warrant leaving lots which are higher in their natural state. The Contractor should consult with the Developer/Builder and the Engineer prior to grading activities when these condition exist.
2. The minimum FFE shall be 0.67 feet above the pad grade shown on this plan.
3. Lots marked by an asterisk (*) require processing per FHA Data Sheet No. 79-G if FHA financing is to be provided. Similar testing is recommended as a quality control program in the absence of FHA required testing.
4. For all lots abutting wetlands no grading shall take place beyond the erosion control line unless specifically shown on the approved construction plans.
5. Side swales shall be constructed simultaneously with house construction. During the site grading activities, the contractor shall grade the side yards to an elevation no lower than 0.2 ft. below the adjoining house pad grades.
6. For Type "A" lot grading receiving runoff from abutting Type "B" lots, all runoff shall be directed to side yard swales.
7. For Type "B" lot grading abutting Type "A" lot grading, all rear lots, all runoff shall be directed to side yard swales.
8. For Type "B" lot grading not abutting detention facilities, the builder shall make every practical effort to direct roof runoff to the fronting right-of-way unless otherwise directed by the Engineer of Record.
9. Minimum side yard swale slopes shall be 1.0%.
10. Project lies within Flood Zone "A" & "X" as shown on FIRM Panel No. 1202J0 0250 E, revised September 30, 1992. Lines shown have been digitally translated from Q3 FLOOD DATA supplied by FEMA NATIONAL FLOOD INSURANCE PROGRAM, dated 1996.
11. 100 year base flood elevation as determined by detailed study by Heidt & Associates, Inc. varies within the project limits from 76.2 to 78.9

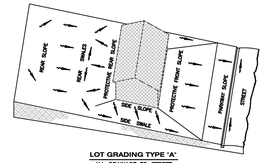

LOT GRADING TYPE 'A'
ALL DRAINAGE TO STREET

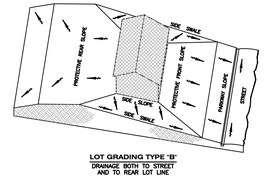

LOT GRADING TYPE 'B'
DRAINAGE BOTH TO STREET AND TO REAR LOT LINE

DATE	DESCRIPTION	BY
07-28-15	REVISE PH 1C-3 LAYOUT - BLK 20	BAB
11-03-14	ADD LOTS REQUIRING 79-G TESTING	SDM
06-19-14	REVISE TITLE BLOCK & OWNER INFO	SDM
10-01-07	CHG LOTS 13/14, BLK.17 PER PASCO DRC	RRR
07-26-07	REMOVE CROSSING ON SOUTHERN CHARM DR.	RRR
07-13-07	SWFWMD LIMITS, PONDS L1/L2 DHW	RRR

REVISIONS

Engineering Business Certificate of Authorization No. 28782
Landscape Architecture Certificate of Authorization No. LC26000405

HEIDT DESIGN
5806-B Breckenridge Parkway
Tampa, Florida 33610
Office: 813-253-5311
Fax: 813-864-7629
www.HeidtDesign.com

DATE:
EDWIN J. ROGERS P.E. NO. 50082
FLORIDA PROFESSIONAL ENGINEER

NEIGHBORHOOD GRADING PLAN

JOB NO. HWL-CT-1070	CONNERTON VILLAGE TWO PARCEL 213
DESIGN WERTZ	
DRAWN MIDDLETON	PREPARED FOR: HAYMAN WOODS, L.L.C.
DATE 5-14-2007	Elevations based on National Geodetic Vertical Datum 1929 (NGVD 29) Conversion from NGVD 29 to NAVD 88 = -0.85 Feet
FILE *NG1	SHEET 10 OF 35 SHEETS

R:\CONNERTON\HWL - CONNERTON\PARCEL 213\ENGINEERING\NG1.DWG-10 OF 35 2015/07/28 4:57 PM BRYANT BOYLES

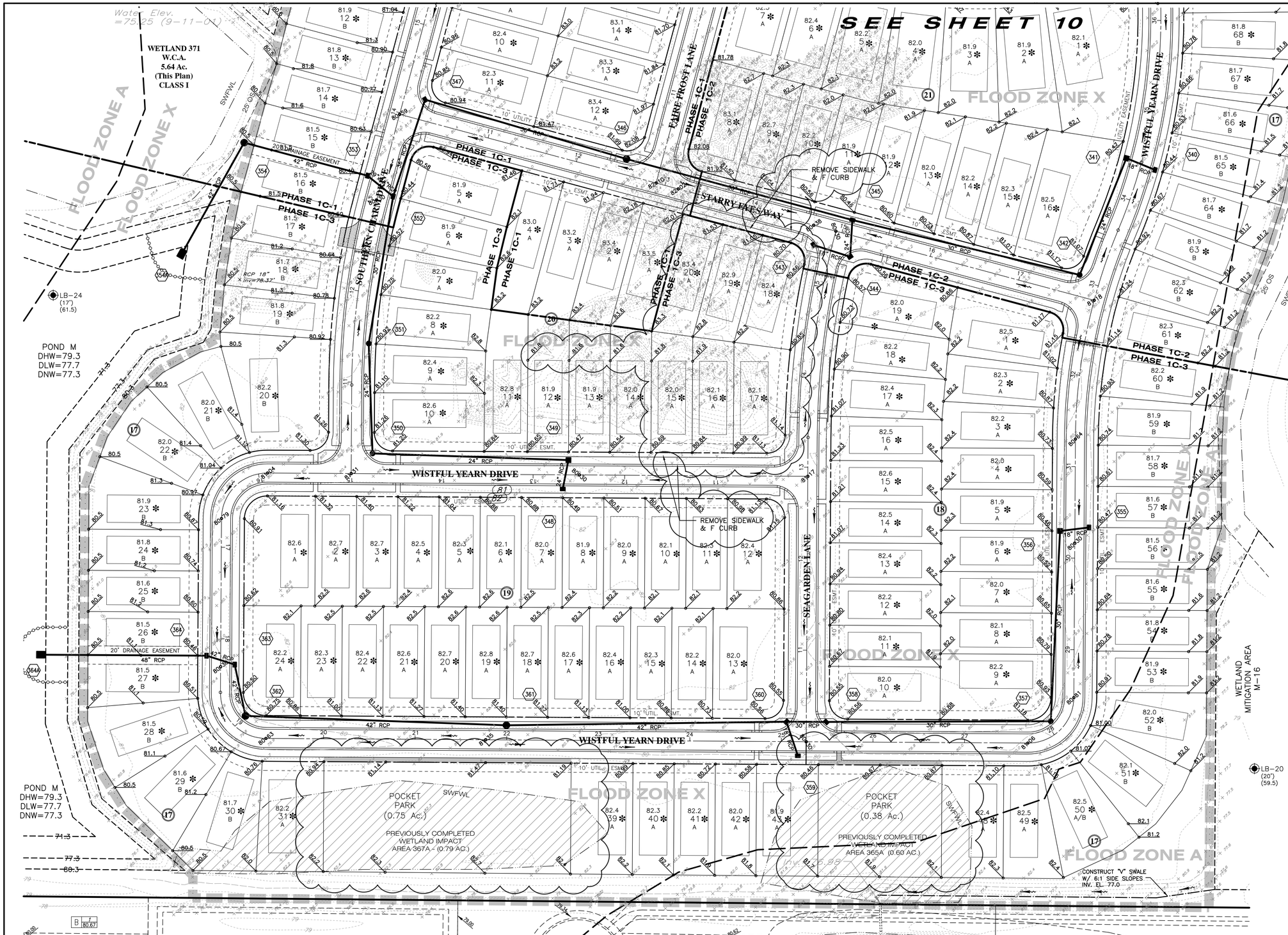

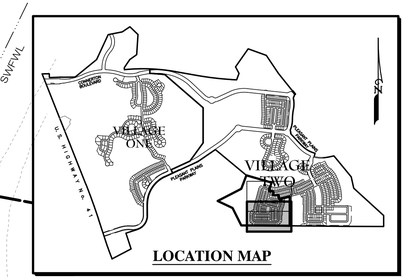

LOCATION MAP

NEIGHBORHOOD GRADING PLAN NOTES:

1. Pad grades shown are minimum grades. Elevations of adjoining lots, existing trees, and other field conditions may warrant leaving lots which are higher in their natural state. The Contractor should consult with the Developer/Builder and the Engineer prior to grading activities when these condition exist.
2. The minimum FFE shall be 0.67 feet above the pad grade shown on this plan.
3. Lots marked by an asterisk (*) require processing per FHA Data Sheet No. 79-G if FHA financing is to be provided. Similar testing is recommended as a quality control program in the absence of FHA required testing.
4. For all lots abutting wetlands no grading shall take place beyond the erosion control line unless specifically shown on the approved construction plans.
5. Side swales shall be constructed simultaneously with house construction. During the site grading activities, the contractor shall grade the side yards to an elevation no lower than 0.2 ft. below the adjoining house pad grades.
6. For Type "A" lot grading receiving runoff from abutting Type "B" lots, all runoff shall be directed to side yard swales.
7. For Type "B" lot grading abutting Type "A" lot grading, all rear lots, all runoff shall be directed to side yard swales.
8. For Type "B" lot grading not abutting detention facilities, the builder shall make every practical effort to direct roof runoff to the fronting right-of-way unless otherwise directed by the Engineer of Record.
9. Minimum side yard swale slopes shall be 1.0%.
10. Project lies within Flood Zone "A" & "X" as shown on FIRM Panel No. 120230 0250 E, revised September 30, 1992. Lines shown have been digitally translated from Q3 FLOOD DATA supplied by FEMA NATIONAL FLOOD INSURANCE PROGRAM, dated 1996.
11. 100 year base flood elevation as determined by detailed study by Heidt & Associates, Inc. varies within the project limits from 76.2 to 78.9

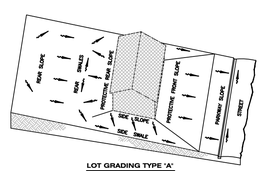

LOT GRADING TYPE 'A'
ALL DRAINAGE TO STREET

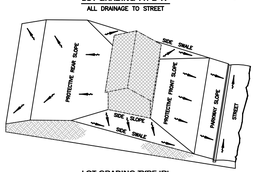

LOT GRADING TYPE 'B'
DRAINAGE BOTH TO STREET AND TO REAR LOT LINE

DATE	DESCRIPTION	BY
07-28-15	REV. PH 1C-3 LAYOUT - BLK 17,18,20	BAB
02-10-15	GRADES LOTS 17, 18 & 19, BLK 18	MED
11-03-14	ADD LOTS REQUIRING 79-G TESTING	SDM
06-19-14	REVISE TITLE BLOCK & OWNER INFO	SDM
10-01-07	CHG LOTS 13/14, BLK.17 PER PASCO DRC	RRR
08-16-07	RELOCATE STR. NO. 357	JMH
07-13-07	SWFWMD LIMITS	RRR

REVISIONS

Engineering Business Certificate of Authorization No. 28782
Landscape Architecture Certificate of Authorization No. LC26000405
HEIDT DESIGN
5806-B Breckenridge Parkway
Tampa, Florida 33610
Office: 813-253-5311
Fax: 813-464-7629
www.HeidtDesign.com

DATE:
EDWIN J. ROGERS P.E. NO. 50082
FLORIDA PROFESSIONAL ENGINEER

NEIGHBORHOOD GRADING PLAN

JOB NO. HWL-CT-1070	CONNERTON VILLAGE TWO PARCEL 213
DESIGN WERTZ	
DRAWN MIDDLETON	PREPARED FOR: HAYMAN WOODS, L.L.C.
DATE 5-14-2007	Elevations based on National Geodetic Vertical Datum 1929 (NGVD 29) Conversion from NGVD 29 to NAVD 88 = -0.85 Feet
FILE *NG2	SHEET 11 OF 35 SHEETS

R:\CONNERTON\HWL - CONNERTON\PARCEL 213\ENGINEERING\NG2.DWG-11 OF 35 2015/07/28 4:57 PM BRYANT BOYLES

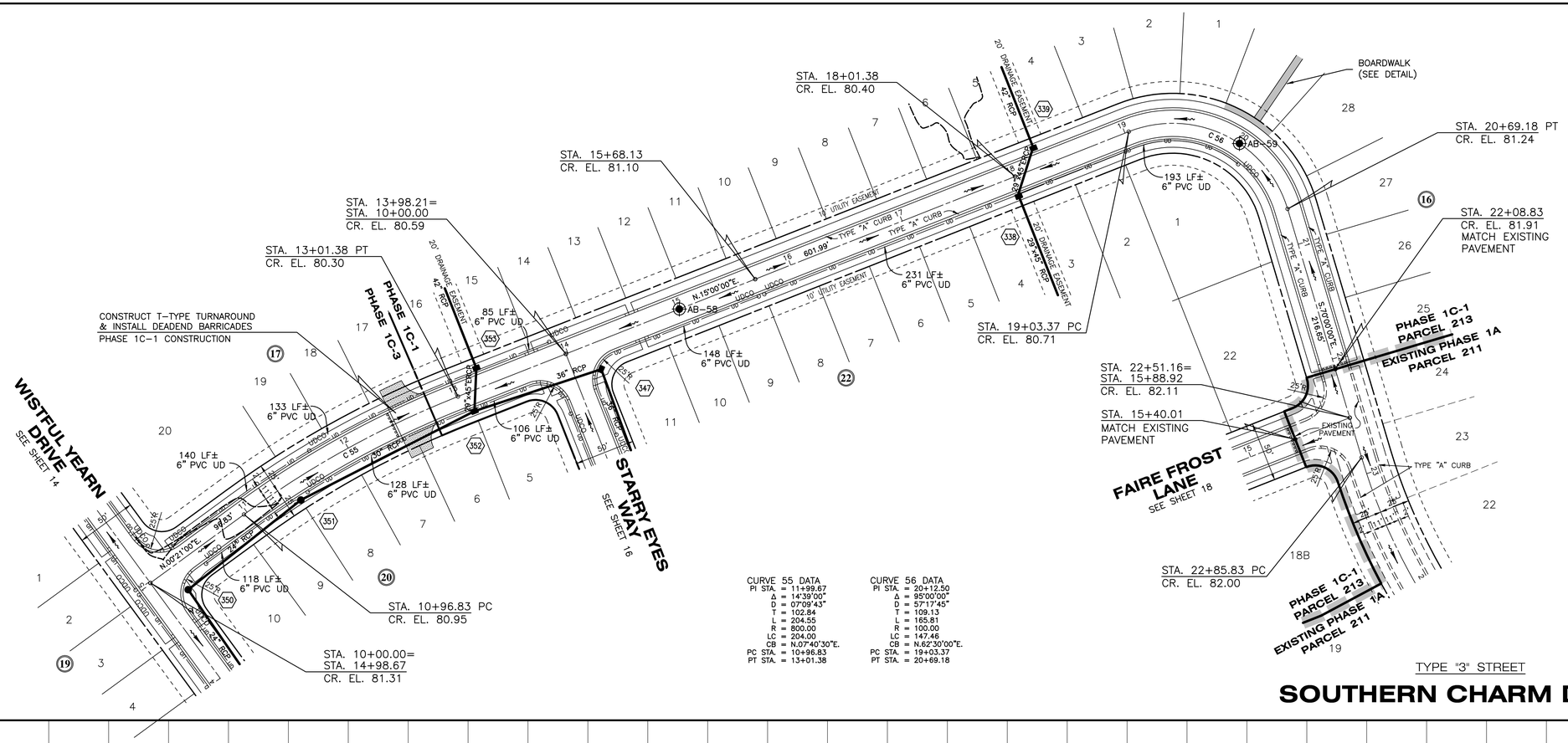

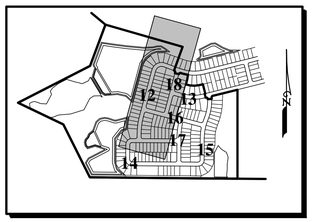

PROFILE KEY MAP

NOTE:
SHADED SIDEWALKS TO BE CONSTRUCTED BY SITE CONTRACTOR.

CURVE 55 DATA	
PI STA.	= 11+99.67
Δ	= 14°39'00"
D	= 07°09'43"
T	= 102.84
L	= 204.55
R	= 800.00
LC	= 204.00
CB	= N.07°40'30"E.
PC STA.	= 10+98.83
PT STA.	= 13+01.38

CURVE 56 DATA	
PI STA.	= 20+12.50
Δ	= 95°00'00"
D	= 57°17'45"
T	= 109.13
L	= 165.81
R	= 100.00
LC	= 147.46
CB	= N.62°30'00"E.
PC STA.	= 19+03.37
PT STA.	= 20+69.18

TYPE "3" STREET

SOUTHERN CHARM DRIVE

SCALE: 1" = 2' VERTICAL
1" = 50' HORIZONTAL

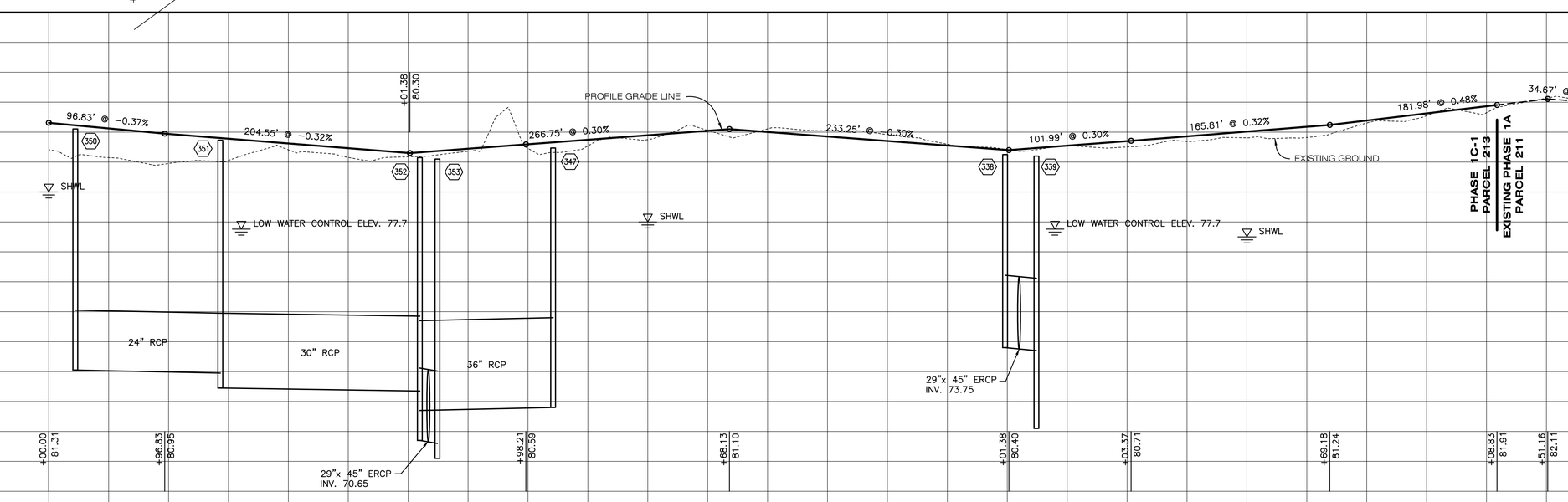

NOTE:
EXISTING GRADE REPRESENTS PRIOR TO MASS GRADING OPERATIONS.

REVISIONS		
DATE	DESCRIPTION	BY
06-19-14	REVISE TITLE BLOCK & OWNER INFO	SDM
07-26-07	REMOVE CROSSING ON SOUTHERN CHARM DR.	RRR

Engineering Business Certificate of Authorization No. 28782
Landscape Architecture Certificate of Authorization No. LC26000405
HEIDT DESIGN
5806-B Breckenridge Parkway
Tampa, Florida 33610
Office: 813-253-5311
Fax: 813-464-7629
www.HeidtDesign.com

DATE:
EDWIN J. ROGERS P.E. NO. 50082
FLORIDA PROFESSIONAL ENGINEER

ROADWAY PLAN & PROFILE

JOB NO.	CNT-CT-025
DESIGN	WERTZ
DRAWN	MIDDLETON
DATE	5-14-2007
FILE	*Dp01

CONNERTON VILLAGE TWO PARCEL 213

PREPARED FOR: **HAYMAN WOODS, L.L.C.**

Elevations based on National Geodetic Vertical Datum 1929 (NGVD 29)
Conversion from NGVD 29 to NAVD 88 = -0.85 Feet

SHEET 12 OF 35 SHEETS

R:\CONNERTON\HWL - CONNERTON\PARCEL 213\ENGINEERING\DP01.DWG-12 OF 35 2015/07/28 4:57 PM BRYANT BOYLES

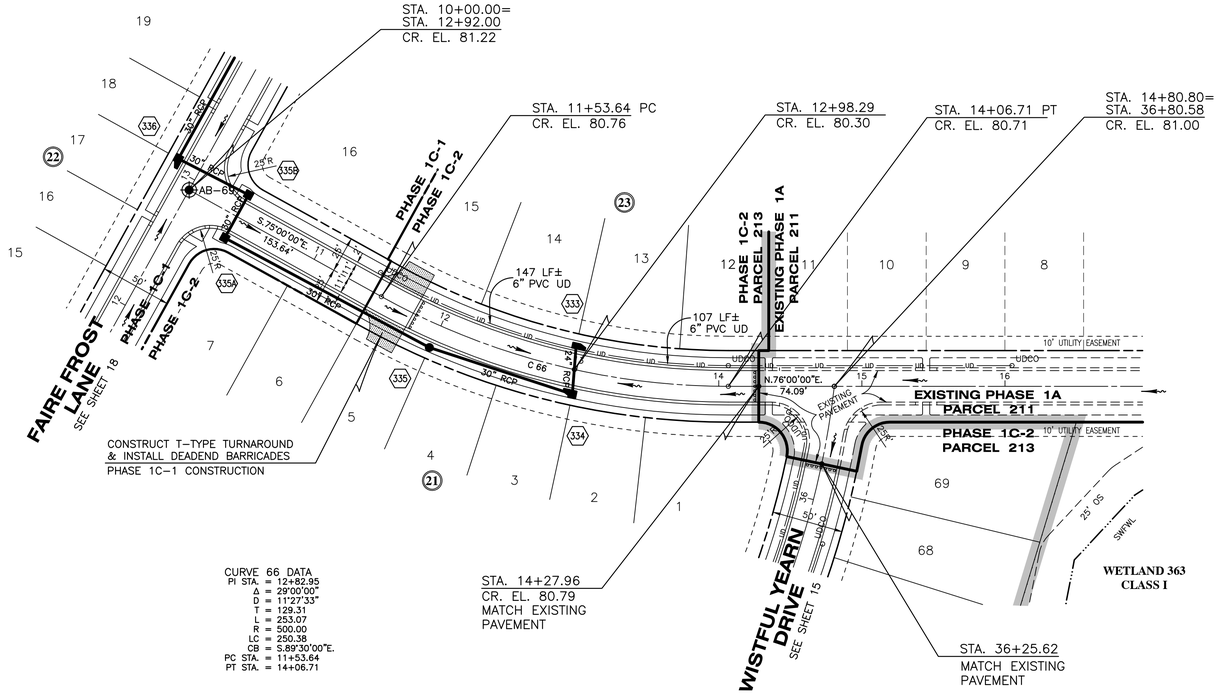

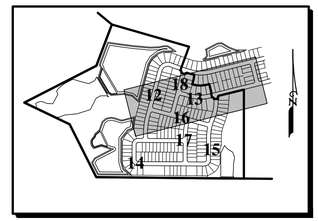

PROFILE KEY MAP

NOTE:
SHADED SIDEWALKS TO BE CONSTRUCTED BY SITE CONTRACTOR.

TYPE "3" STREET

BILLOWY JAUNT DRIVE

SCALE: 1" = 2' VERTICAL
1" = 50' HORIZONTAL

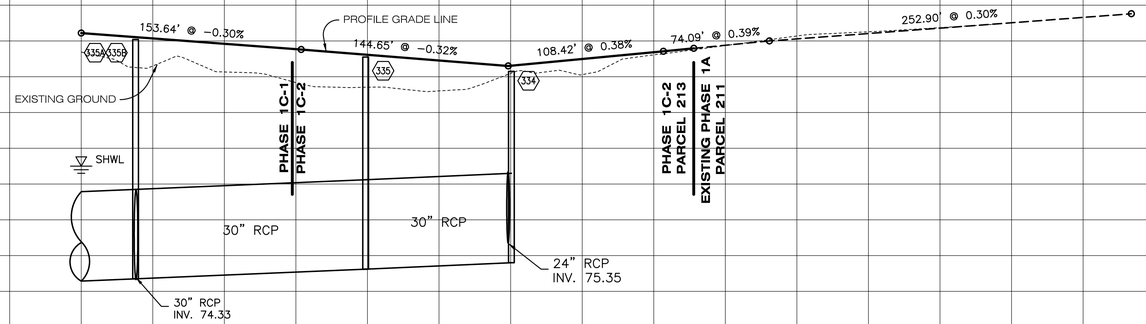

NOTE:
EXISTING GRADE REPRESENTS PRIOR TO MASS GRADING OPERATIONS.

DATE	DESCRIPTION	BY
06-19-14	REVISE TITLE BLOCK & OWNER INFO	SDM

REVISIONS

Engineering Business Certificate of Authorization No. 28782
Landscape Architecture Certificate of Authorization No. LC26000405
HEIDT DESIGN
5806-B Breckenridge Parkway
Tampa, Florida 33610
Office: 813-253-5311
Fax: 813-664-7629
www.HeidtDesign.com

DATE:
EDWIN J. ROGERS P.E. NO. 50082
FLORIDA PROFESSIONAL ENGINEER

ROADWAY PLAN & PROFILE

JOB NO. CNT-CT-025	CONNERTON VILLAGE TWO PARCEL 213
DESIGN WERTZ	
DRAWN MIDDLETON	PREPARED FOR: HAYMAN WOODS, L.L.C.
DATE 5-14-2007	Elevations based on National Geodetic Vertical Datum 1929 (NGVD 29) Conversion from NGVD 29 to NAVD 88 = -0.85 Feet
FILE *Dp02	SHEET 13 OF 35 SHEETS

R:\CONNERTON\PHL - CONNERTON PARCEL 213\ENGINEERING\DP02.DWG-13 OF 35 2015/07/28 4:57 PM BRYANT BOYLES

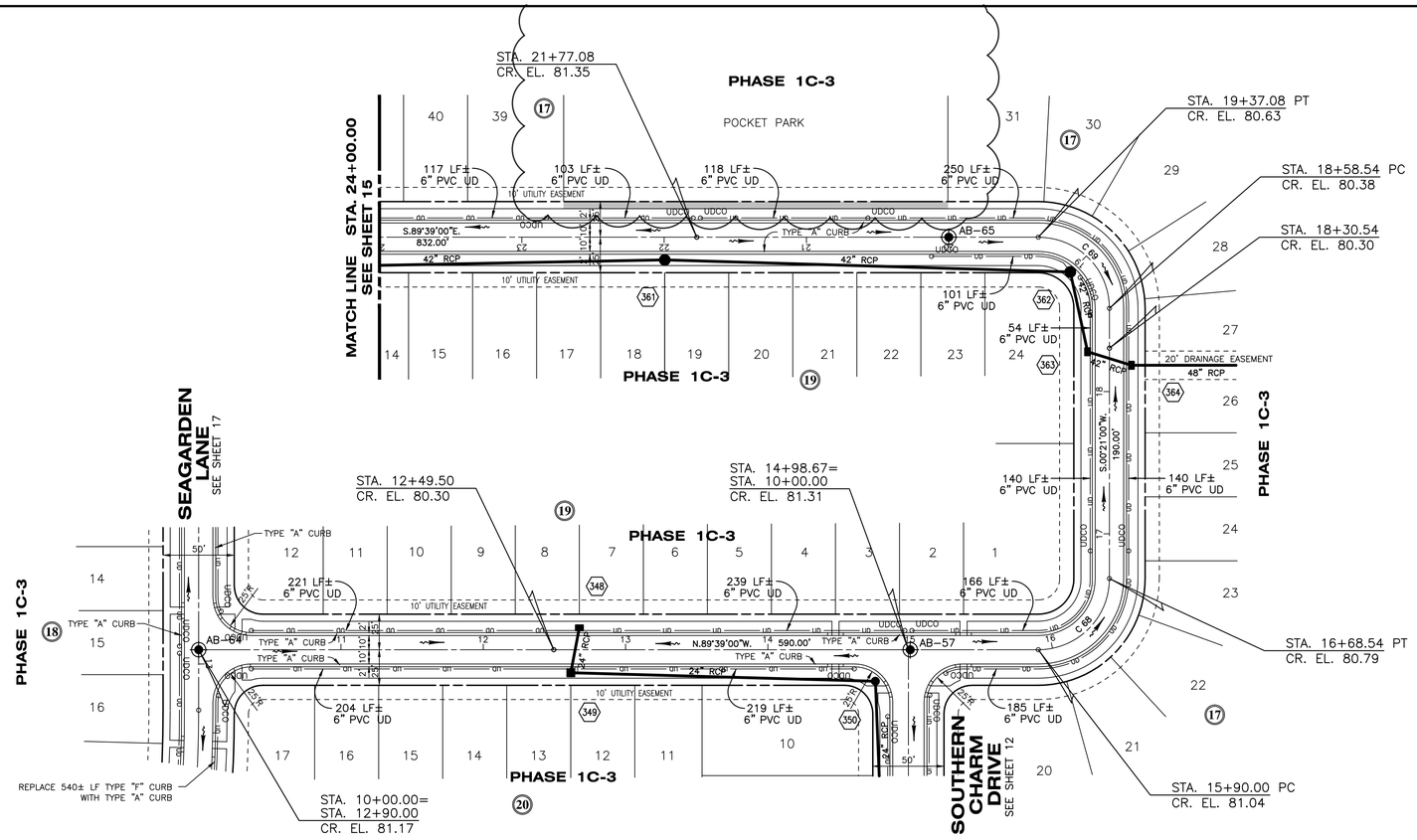

CURVE 68 DATA
PI STA. = 16+40.00
Δ = 90°00'00"
D = 114°35'30"
T = 50.00
L = 78.54
R = 50.00
LC = 70.71
CB = S.45°21'00"W.
PC STA. = 15+90.00
PT STA. = 16+68.54

CURVE 69 DATA
PI STA. = 19+08.54
Δ = 90°00'00"
D = 114°35'30"
T = 50.00
L = 78.54
R = 50.00
LC = 70.71
CB = S.44°39'00"E.
PC STA. = 18+58.54
PT STA. = 19+37.08

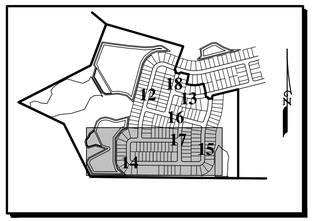

PROFILE KEY MAP

NOTE:
SHADED SIDEWALKS TO BE CONSTRUCTED BY SITE CONTRACTOR.

TYPE "4" STREET

WISTFUL YEARN DRIVE

SCALE: 1" = 2' VERTICAL
1" = 50' HORIZONTAL

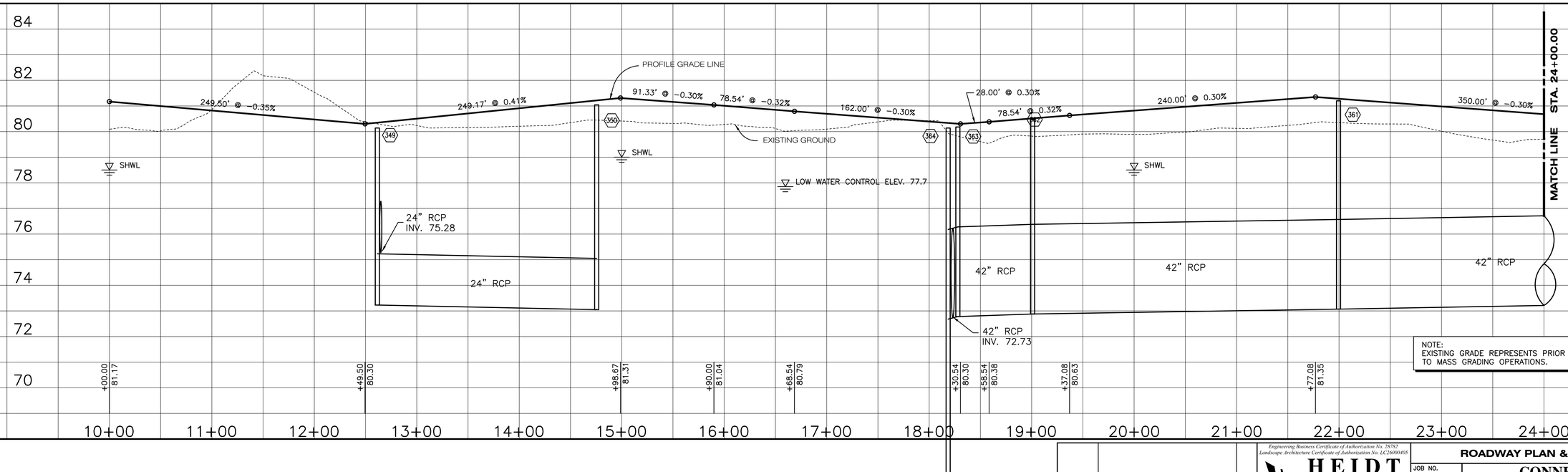

NOTE:
EXISTING GRADE REPRESENTS PRIOR TO MASS GRADING OPERATIONS.

DATE	DESCRIPTION	BY
07-28-15	REVISE PH 1C-3 LAYOUT - BLK 17,20	BAB
06-19-14	REVISE TITLE BLOCK & OWNER INFO	SDM

REVISIONS

Engineering Business Certificate of Authorization No. 28782
Landscape Architecture Certificate of Authorization No. LC26000405
HEIDT DESIGN
5806-B Breckenridge Parkway
Tampa, Florida 33610
Office: 813-253-5311
Fax: 813-464-7629
www.HeidtDesign.com

DATE:

EDWIN J. ROGERS P.E. NO. 50082
FLORIDA PROFESSIONAL ENGINEER

ROADWAY PLAN & PROFILE

JOB NO.	HWL-CT-1070
DESIGN	WERTZ
DRAWN	MIDDLETON
DATE	5-14-2007
FILE	*Dp03

CONNERTON VILLAGE TWO PARCEL 213

PREPARED FOR: **HAYMAN WOODS, L.L.C.**

Elevations based on National Geodetic Vertical Datum 1929 (NGVD 29)
Conversion from NGVD 29 to NAVD 88 = -0.85 Feet

SHEET 14 OF 35 SHEETS

R:\CONNERTON\HWL - CONNERTON PARCEL 213\ENGINEERING\DP03.DWG-14 OF 35 2015/07/28 4:58 PM BRYANT BOYLES

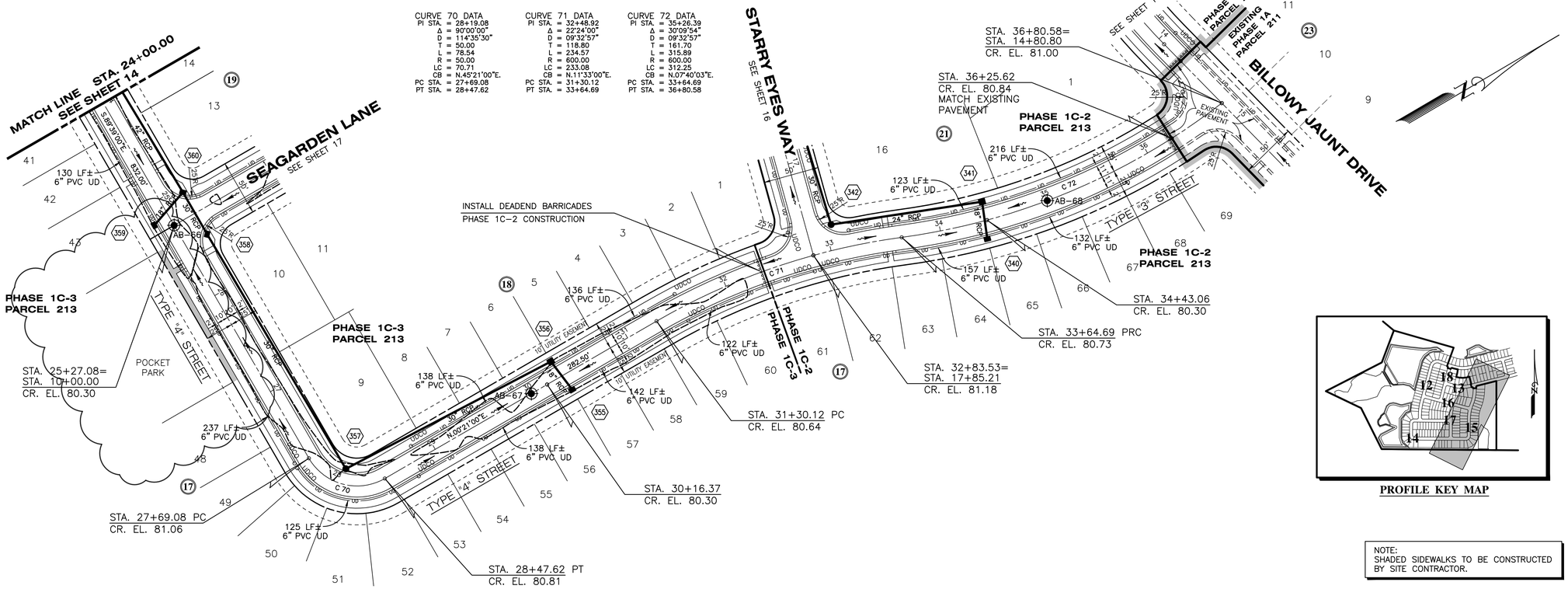

WISTFUL YEARN DRIVE

SCALE: 1" = 2' VERTICAL
1" = 50' HORIZONTAL

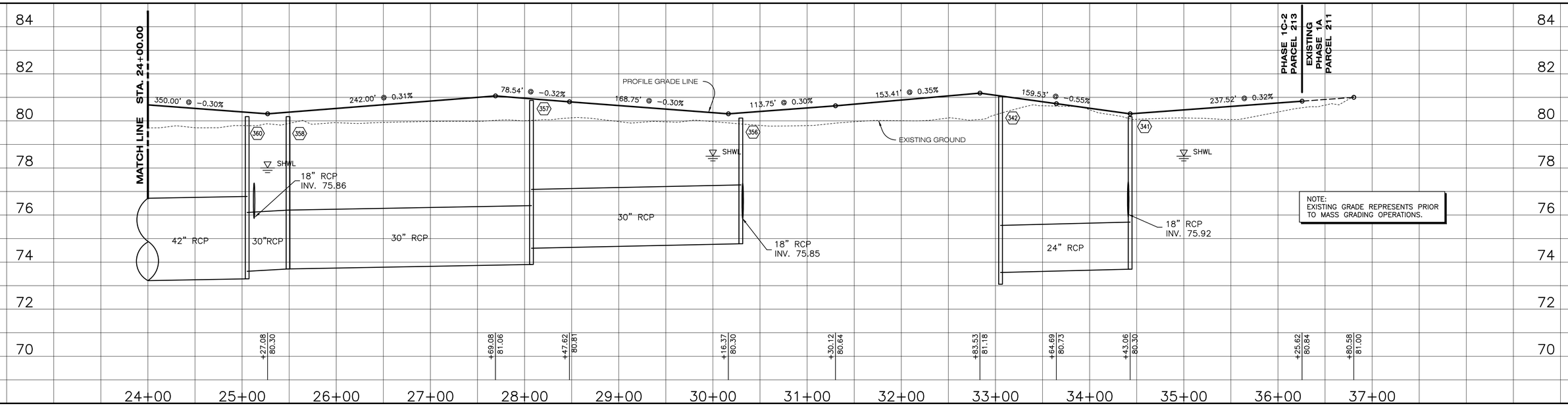

DATE	DESCRIPTION	BY
07-28-15	REVISE PH 1C-3 LAYOUT - BLK 17	BAB
06-19-14	REVISE TITLE BLOCK & OWNER INFO	SDM
08-16-07	RELOCATE STR. NO. 357	JMH

REVISIONS

Engineering Business Certificate of Authorization No. 28782
Landscape Architecture Certificate of Authorization No. LC26000405
HEIDT DESIGN
5806-B Breckenridge Parkway
Tampa, Florida 33610
Office: 813-253-5311
Fax: 813-464-7629
www.HeidtDesign.com
DATE:
EDWIN J. ROGERS P.E. NO. 50082
FLORIDA PROFESSIONAL ENGINEER

ROADWAY PLAN & PROFILE

JOB NO.	HWL-CT-1070
DESIGN	WERTZ
DRAWN	MIDDLETON
DATE	5-14-2007
FILE	*Dp04

CONNERTON VILLAGE TWO PARCEL 213

PREPARED FOR: HAYMAN WOODS, L.L.C.

Elevations based on National Geodetic Vertical Datum 1929 (NGVD 29)
Conversion from NGVD 29 to NAVD 88 = -0.85 Feet

R:\CONNERTON\HWL - CONNERTON PARCEL 213\ENGINEERING\DP04.DWG-15 OF 35 2015/07/28 4:58 PM BRYANT BOYLES

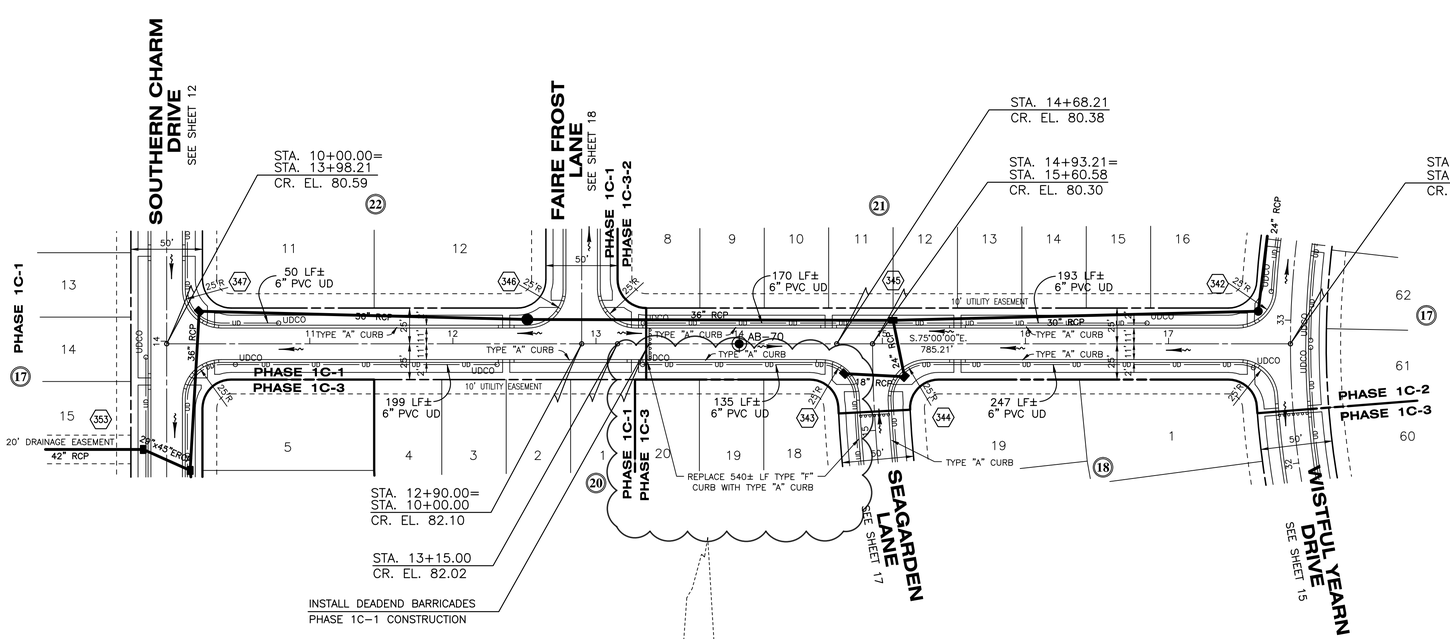

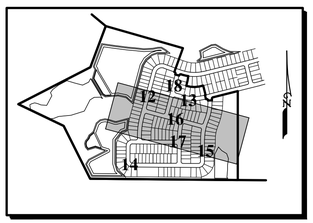

NOTE:
SHADED SIDEWALKS TO BE CONSTRUCTED BY SITE CONTRACTOR.

TYPE "3" STREET

STARRY EYES WAY

SCALE: 1" = 2' VERTICAL
1" = 50' HORIZONTAL

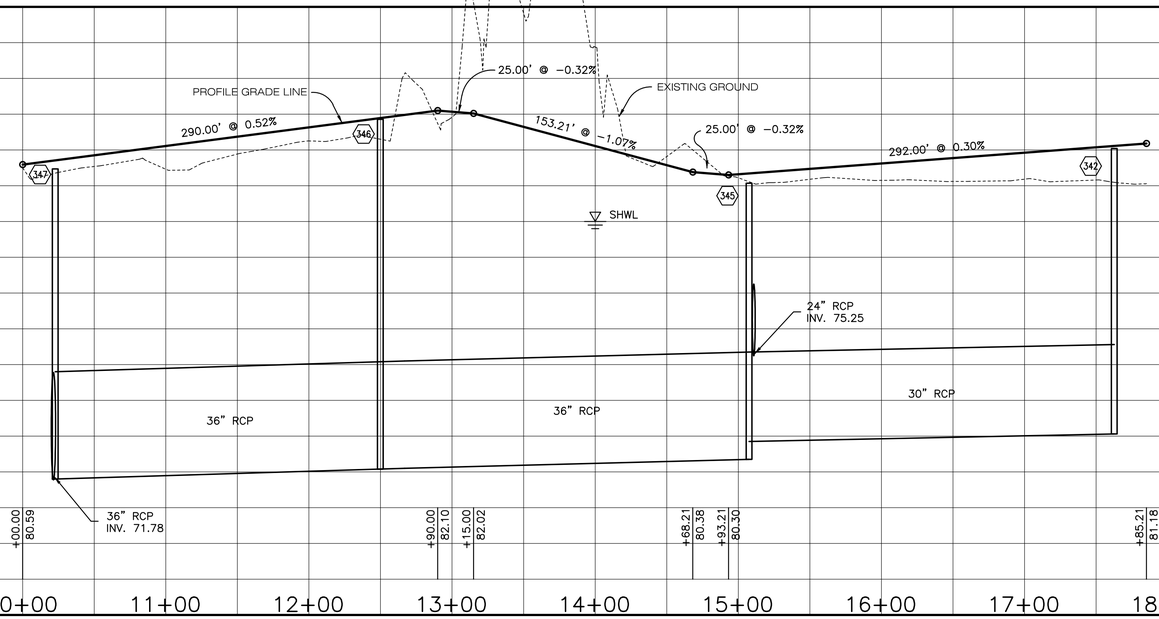

NOTE:
EXISTING GRADE REPRESENTS PRIOR TO MASS GRADING OPERATIONS.

DATE	DESCRIPTION	BY
07-28-15	REVISE PH 1C-3 LAYOUT - BLK20	BAB
06-19-14	REVISE TITLE BLOCK & OWNER INFO	SDM

REVISIONS

Engineering Business Certificate of Authorization No. 28782
Landscape Architecture Certificate of Authorization No. LC26000405

HEIDT DESIGN
5806-B Breckenridge Parkway
Tampa, Florida 33610
Office: 813-253-5311
Fax: 813-664-7629
www.HeidtDesign.com

DATE:
EDWIN J. ROGERS P.E. NO. 50082
FLORIDA PROFESSIONAL ENGINEER

ROADWAY PLAN & PROFILE

JOB NO.	HWL-CT-1070
DESIGN	WERTZ
DRAWN	MIDDLETON
DATE	5-14-2007
FILE	*Dp05

CONNERTON VILLAGE TWO PARCEL 213

PREPARED FOR: **HAYMAN WOODS, L.L.C.**

Elevations based on National Geodetic Vertical Datum 1929 (NGVD 29)
Conversion from NGVD 29 to NAVD 88 = -0.85 Feet

R:\CONNERTON\HWL - CONNERTON PARCEL 213\ENGINEERING\DP05.DWG-16 OF 35 2015/07/28 4:58 PM BRYANT BOYLES

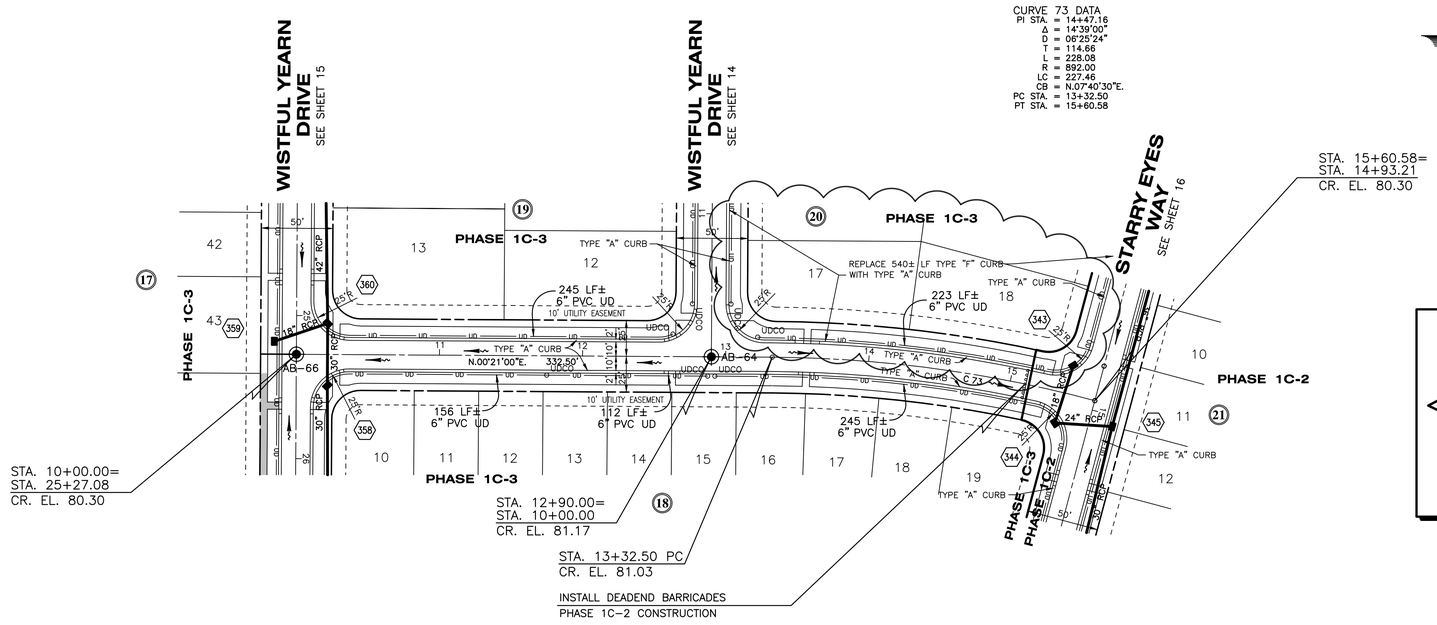

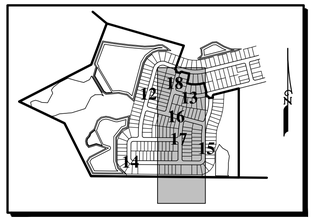

PROFILE KEY MAP

NOTE:
SHADED SIDEWALKS TO BE CONSTRUCTED BY SITE CONTRACTOR.

TYPE "3" STREET

SEAGARDEN LANE

SCALE: 1" = 2' VERTICAL
1" = 50' HORIZONTAL

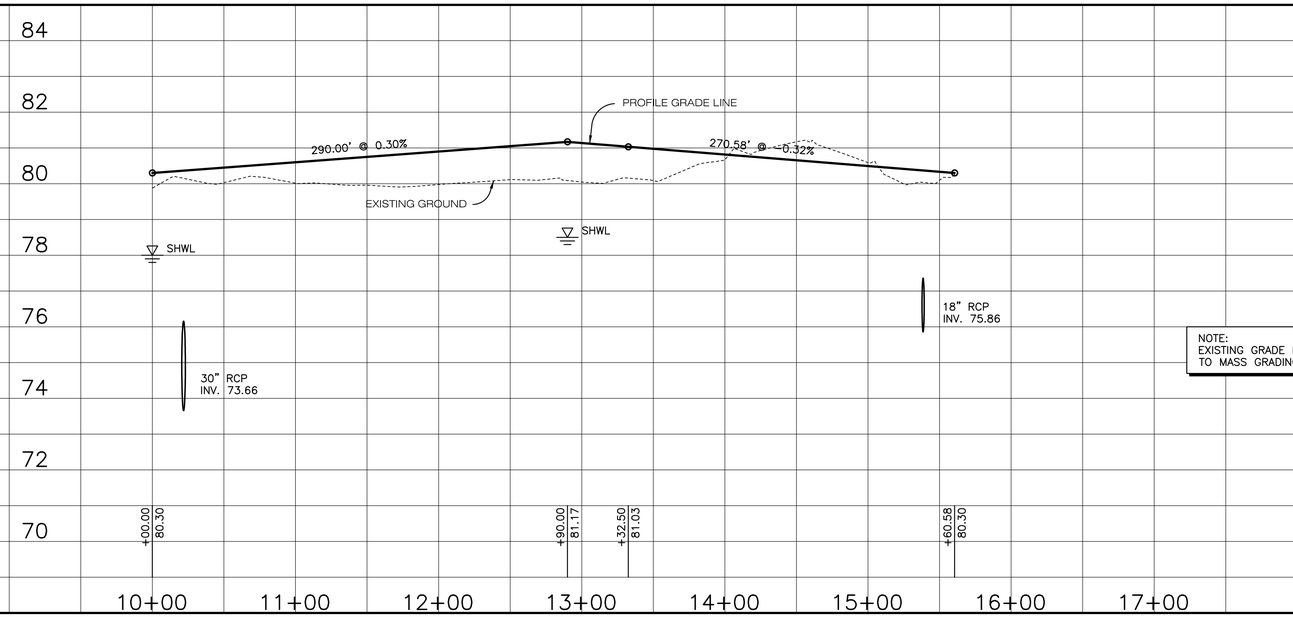

NOTE:
EXISTING GRADE REPRESENTS PRIOR TO MASS GRADING OPERATIONS.

DATE	DESCRIPTION	BY
07-28-15	REVISE PH 1C-3 LAYOUT - BLK 17,20	BAB
06-19-14	REVISE TITLE BLOCK & OWNER INFO	SDM

REVISIONS

Engineering Business Certificate of Authorization No. 28782
Landscape Architecture Certificate of Authorization No. LC26000405
HEIDT DESIGN
5806-B Breckenridge Parkway
Tampa, Florida 33610
Office: 813-253-5311
Fax: 813-664-7629
www.HeidtDesign.com

DATE:
EDWIN J. ROGERS P.E. NO. 50082
FLORIDA PROFESSIONAL ENGINEER

ROADWAY PLAN & PROFILE

JOB NO.	HWL-CT-1070
DESIGN	WERTZ
DRAWN	MIDDLETON
DATE	5-14-2007
FILE	*Dp06

CONNERTON VILLAGE TWO PARCEL 213

PREPARED FOR: **HAYMAN WOODS, L.L.C.**

Elevations based on National Geodetic Vertical Datum 1929 (NGVD 29)
Conversion from NGVD 29 to NAVD 88 = -0.85 Feet

SHEET 17 OF 35 SHEETS

R:\CONNERTON\HWL - CONNERTON PARCEL 213\ENGINEERING\DP06.DWG-17 OF 35 2015/07/28 4:58 PM BRYANT BOYLES

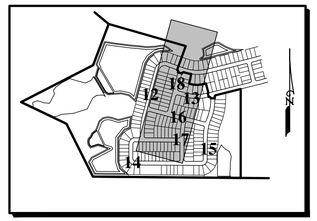

PROFILE KEY MAP

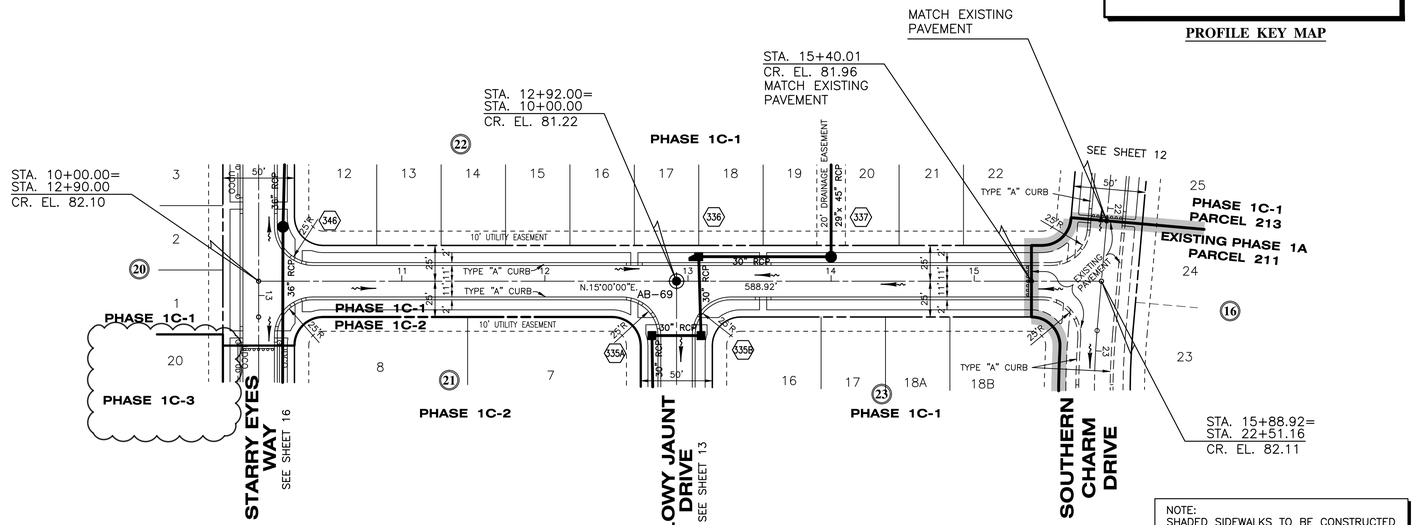

NOTE:
SHADED SIDEWALKS TO BE CONSTRUCTED BY SITE CONTRACTOR.

TYPE "3" STREET

FAIRE FROST LANE

SCALE: 1" = 2' VERTICAL
1" = 50' HORIZONTAL

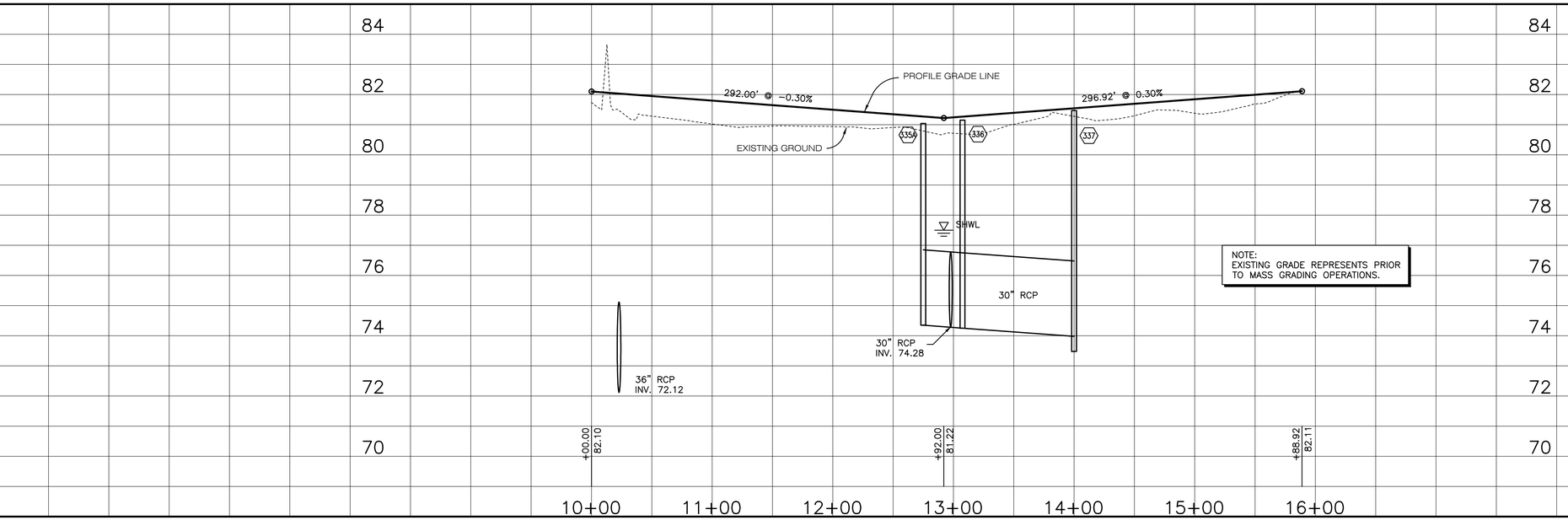

NOTE:
EXISTING GRADE REPRESENTS PRIOR TO MASS GRADING OPERATIONS.

DATE	DESCRIPTION	BY
07-28-15	REVISE PH 1C-3 LAYOUT - BLK 20	BAB
06-19-14	REVISE TITLE BLOCK & OWNER INFO	SDM

REVISIONS

Engineering Business Certificate of Authorization No. 28782
Landscape Architecture Certificate of Authorization No. LC26000405

HEIDT DESIGN

5806-B Breckenridge Parkway
Tampa, Florida 33610
Office: 813-253-5311
Fax: 813-664-7629
www.HeidtDesign.com

DATE:

EDWIN J. ROGERS P.E. NO. 50082
FLORIDA PROFESSIONAL ENGINEER

ROADWAY PLAN & PROFILE

JOB NO. HWL-CT-1070	CONNERTON VILLAGE TWO PARCEL 213
DESIGN WERTZ	
DRAWN MIDDLETON	PREPARED FOR: HAYMAN WOODS, L.L.C.
DATE 5-14-2007	Elevations based on National Geodetic Vertical Datum 1929 (NGVD 29) Conversion from NGVD 29 to NAVD 88 = -0.85 Feet
FILE *Dp07	SHEET 18 OF 35 SHEETS

R:\CONNERTON\HWL - CONNERTON PARCEL 213\ENGINEERING\DP07.DWG--18 OF 35 2015/07/28 4:58 PM BRYANT BOYLES

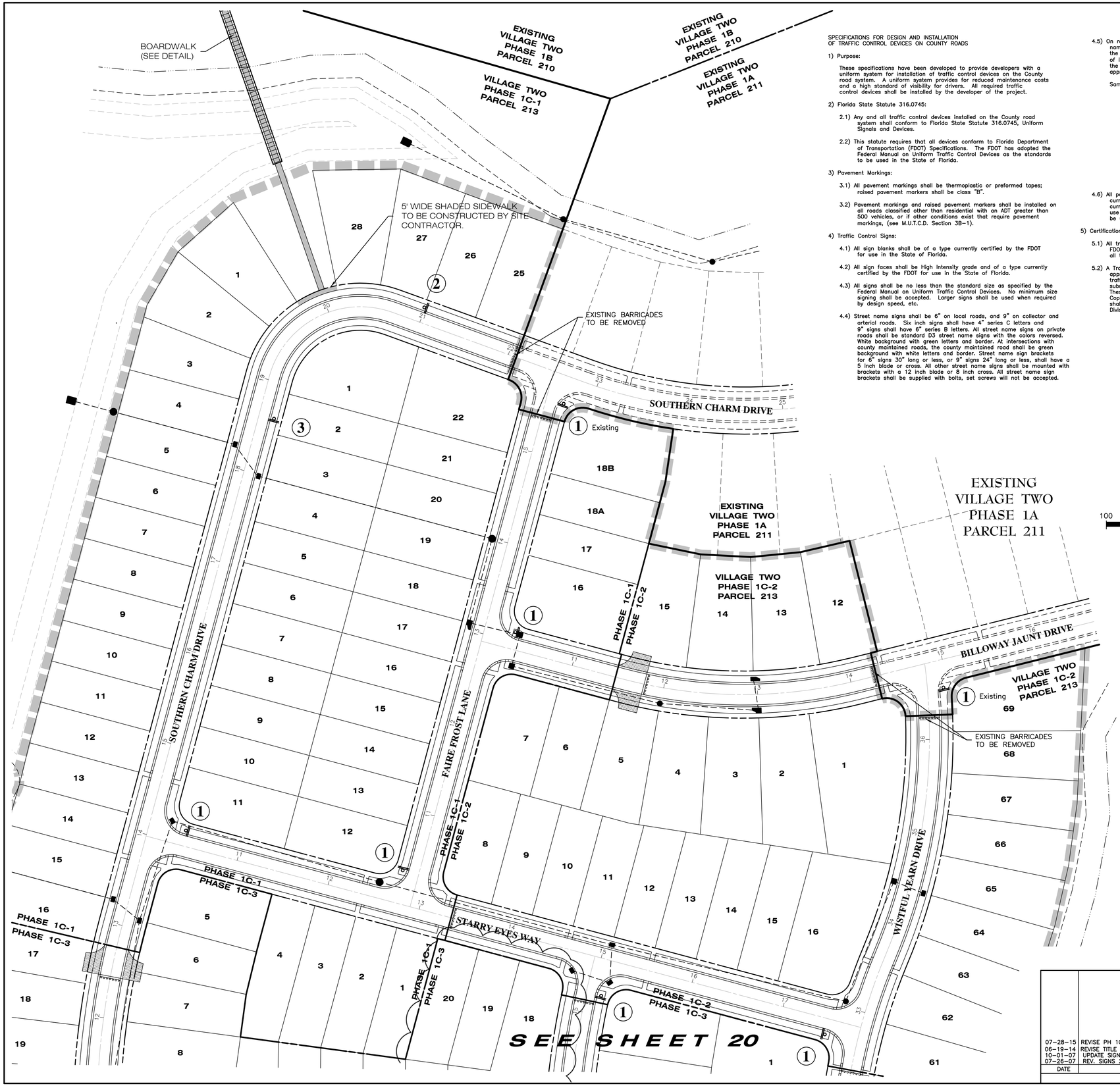

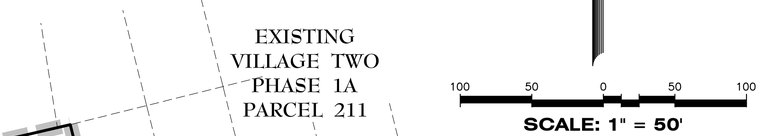

SPECIFICATIONS FOR DESIGN AND INSTALLATION
OF TRAFFIC CONTROL DEVICES ON COUNTY ROADS

1) Purpose:

These specifications have been developed to provide developers with a uniform system for installation of traffic control devices on the County road system. A uniform system provides for reduced maintenance costs and a high standard of visibility for drivers. All required traffic control devices shall be installed by the developer of the project.

2) Florida State Statute 316.0745:

2.1) Any and all traffic control devices installed on the County road system shall conform to Florida State Statute 316.0745, Uniform Signals and Devices.

2.2) This statute requires that all devices conform to Florida Department of Transportation (FDOT) Specifications. The FDOT has adopted the Federal Manual on Uniform Traffic Control Devices as the standards to be used in the State of Florida.

3) Pavement Markings:

3.1) All pavement markings shall be thermoplastic or preformed tapes; raised pavement markers shall be class "B".

3.2) Pavement markings and raised pavement markers shall be installed on all roads classified other than residential with an ADT greater than 500 vehicles, or if other conditions exist that require pavement markings, (see M.U.T.C.D. Section 3B-1).

4) Traffic Control Signs:

4.1) All sign blanks shall be of a type currently certified by the FDOT for use in the State of Florida.

4.2) All sign faces shall be High Intensity grade and of a type currently certified by the FDOT for use in the State of Florida.

4.3) All signs shall be no less than the standard size as specified by the Federal Manual on Uniform Traffic Control Devices. No minimum size signing shall be accepted. Larger signs shall be used when required by design speed, etc.

4.4) Street name signs shall be 6" on local roads, and 9" on collector and arterial roads. Six inch signs shall have 4" series C letters and 9" signs shall have 6" series B letters. All street name signs on private roads shall be standard D3 street name signs with the colors reversed. White background with green letters and border. At intersections with county maintained roads, the county maintained road shall be green background with white letters and border. Street name sign brackets for 6" signs 30" long or less, or 9" signs 24" long or less, shall have a 5 inch blade or cross. All other street name signs shall be mounted with brackets with a 12 inch blade or 8 inch cross. All street name sign brackets shall be supplied with bolts, set screws will not be accepted.

4.5) On roads to be maintained by Pasco County, all signs other than street names shall be date coded with a yellow reflective label affixed to the back of the sign. It will be punched to show month, day and year of installation (See Sample Label). Alternate label designs providing the date code information may be used if a sample is submitted and approved by Pasco County prior to installation.

Sample Label: size 2" x 4"

WARNING

REMOVAL OF, OR DEFACING ANY TRAFFIC CONTROL
DEVICE IS PUNISHABLE BY FINE AND/OR IMPRISONMENT
REPORT DAMAGE BY CALLING (727) 847-2411

INSTALLED

J	F	M	A	M	J	J	A	S	O	N	D
10's	20's	30's	–	1	2	3	4	5	6	7	8	9
07	08	09	10	11	12	13	14	15				

4.6) All post systems, mounting brackets and hardware shall be of a type currently in use by the Pasco County Public Works Department and currently certified by the Florida Department of Transportation for use in the State of Florida. Alternative systems, etc., shall only be used if approved by the County Engineer.

5) Certification of materials:

5.1) All traffic control devices and materials shall be on the current FDOT APPROVED PRODUCTS LIST. Proof of certification is required for all traffic control devices.

5.2) A Traffic Control Devices Submittal Data Form shall be submitted for approval prior to installation of any traffic control device. No traffic control device shall be installed until the certification submittal has been approved by the Traffic Operations Division. These forms are available from the Traffic Operations Division. Copies of the approved Traffic Control Devices Submittal Data Form shall be sent to the contractor and the Engineering Inspections Division.

6) Traffic Control Devices Plan:

6.1) A detailed set of plans for required traffic control devices shall be submitted for all road construction, site development, subdivision, and Right-of-Way Use Permits. These plans shall be in conformance with FDOT design standards. All plans shall be signed and sealed by a registered professional engineer in the State of Florida.

6.2) With the submittal of final plans to the Development Review Division, two additional sets of the traffic control plan portion of the entire plan shall be submitted. These two sets will be forwarded to the Traffic Operations Division.

7) Cost Estimate:

An engineer's cost estimate shall be required for all proposed traffic control devices. The estimate shall be provided in conjunction with the Traffic Control Devices Submittal Data Form (See Section 5.2).

8) Inspection and Acceptance:

8.1) Upon completion of the installation of the traffic control devices, the contractor shall call the Engineering Inspections Division for an inspection at (727) 847-8154.

8.2) The inspection shall be made by the Engineering Inspection Division within 48 hours (two working days) of the request.

8.3) An inspection report shall be made by the Engineering Inspections Division. Copies of the report shall be sent to the Engineer and the developer.

8.4) No roadway shall be open to the public until all traffic control devices have been inspected and accepted by Pasco County.

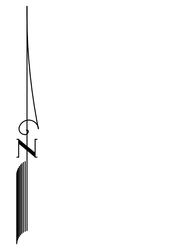

100 50 0 50 100

SCALE: 1" = 50'

SIDEWALK LEGEND

- EXISTING CONCRETE SIDEWALK
- PROPOSED 4½" THICK CONCRETE SIDEWALK TO BE CONSTRUCTED BY INDIVIDUAL HOUSE CONTRACTOR
- PROPOSED 4½" THICK CONCRETE SIDEWALK TO BE CONSTRUCTED BY SITE CONTRACTOR

SIGN LEGEND

① = STOP
R1-1
30"x30"
W/ D3 STREET
NAME SIGNS

② = W1-1L
15 M.P.H.
W13-1
18"x18"

③ = W1-1R
15 M.P.H.
W13-1
18"x18"

CONNERTON
Phases 1C-1, 1C-2 & 1C-3
Parcel 213 - Signs Table

SIGN IDENTIFICATION	SIGN SIZE	SIGN QUANTITY		
		PHASE 1C-1	PHASE 1C-2	PHASE 1C-3
R1-1	30"x 30"	3	1	4
W1-1R	30"x 30"	1	0	1
W1-1L	30"x 30"	1	0	1
W1-11	30"x 30"	0	0	2
W13-1	18"x 18"	2	0	4
D3	PRIVATE=6"	6	2	8

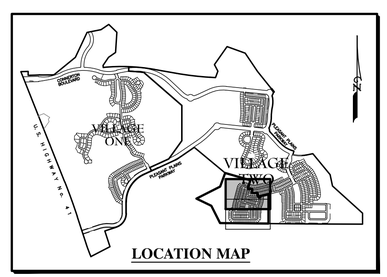

LOCATION MAP

DATE	DESCRIPTION	BY
07-28-15	REVISE PH 1C-3 LAYOUT	BAB
06-19-14	REVISE TITLE BLOCK & OWNER INFO	SDM
10-01-07	UPDATE SIGN TABLE	RRR
07-26-07	REV. SIGNS 2 & 3, REMOVE RAMPS	RRR

REVISIONS

Engineering Business Certificate of Authorization No. 28782
Landscape Architecture Certificate of Authorization No. LC26000405
HEIDT DESIGN
5806-B Breckenridge Parkway
Tampa, Florida 33610
Office: 813-253-5311
Fax: 813-464-7629
www.HeidtDesign.com

DATE:

EDWIN J. ROGERS P.E. NO. 50082
FLORIDA PROFESSIONAL ENGINEER

SIGNING & PAVEMENT MARKING/SIDEWALK PLAN

JOB NO. HWL-CT-1070	**CONNERTON VILLAGE TWO PARCEL 213**
DESIGN WERTZ	
DRAWN MIDDLETON	PREPARED FOR: **HAYMAN WOODS, L.L.C.**
DATE 5-14-2007	**Elevations based on National Geodetic Vertical Datum 1929 (NGVD 29)** Conversion from NGVD 29 to NAVD 88 = -0.85 Feet
FILE *SpmSw1	**SHEET 19 OF 35 SHEETS**

R:\CONNERTON\HWL - CONNERTON\PARCEL 213\ENGINEERING\SPMSW1.DWG-19 OF 35 2015/07/28 4:58 PM BRYANT BOYLES

SEE SHEET 19

WISTFUL YEARN DRIVE

FAIRE FROST LANE

PHASE 1C-1
PHASE 1C-2

STARRY EYES WAY

PHASE 1C-1
PHASE 1C-3

SOUTHERN CHARM DRIVE

PHASE 1C-2
PHASE 1C-3

SEAGARDEN LANE

5' WIDE SHADED SIDEWALK TO BE CONSTRUCTED BY SITE CONTRACTOR.

5' WIDE SHADED SIDEWALK TO BE CONSTRUCTED BY SITE CONTRACTOR.

POCKET PARK

POCKET PARK

N

100 50 0 50 100

SCALE: 1" = 50'

SIDEWALK LEGEND

PROPOSED 4" THICK CONCRETE SIDEWALK TO BE CONSTRUCTED BY INDIVIDUAL HOUSE CONTRACTOR

PROPOSED 4" THICK CONCRETE SIDEWALK TO BE CONSTRUCTED BY SITE CONTRACTOR

SIGN LEGEND

1 = STOP
R1-1
30"x30"
W/ D3 STREET NAME SIGNS

2 = W1-1L
15 M.P.H.
W13-1
18"x18"

3 = W1-1R
15 M.P.H.
W13-1
18"x18"

4 = W1-11
15 M.P.H.
W13-1
18"x18"

5 = W1-11
15 M.P.H.
W13-1
18"x18"

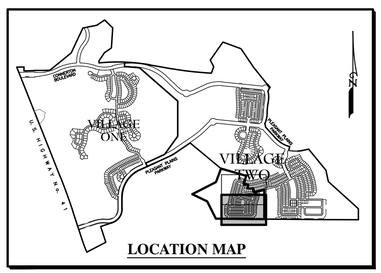

LOCATION MAP

R:\CONNERTON\HWL - CONNERTON\PARCEL 213\ENGINEERING\SPMSW2.DWG-20 OF 35 2015/07/28 4:58 PM BRYANT BOYLES

DATE	DESCRIPTION	BY
07-28-15	REVISE PH 1C-3 LAYOUT - BLK 17, 20	BAB
06-19-14	REVISE TITLE BLOCK & OWNER INFO	SDM
10-01-07	ADD SIGNS 4 & 5, LOTS 13/14, BLK.17	RRR
07-26-07	REV. SIGNS 2 & 3	RRR

REVISIONS

Engineering Business Certificate of Authorization No. 28782
Landscape Architecture Certificate of Authorization No. LC26000405

HEIDT DESIGN
5806-B Breckenridge Parkway
Tampa, Florida 33610
Office: 813-253-5311
Fax: 813-864-7629
www.HeidtDesign.com

DATE:

EDWIN J. ROGERS P.E. NO. 50082
FLORIDA PROFESSIONAL ENGINEER

SIGNING & PAVEMENT MARKING/SIDEWALK PLAN

JOB NO.	HWL-CT-1070
DESIGN	WERTZ
DRAWN	MIDDLETON
DATE	5-14-2007
FILE	*SpmSw2

CONNERTON VILLAGE TWO PARCEL 213

PREPARED FOR: **HAYMAN WOODS, L.L.C.**

Elevations based on National Geodetic Vertical Datum 1929 (NGVD 29)
Conversion from NGVD 29 to NAVD 88 = -0.85 Feet

SHEET 20 OF 35 SHEETS

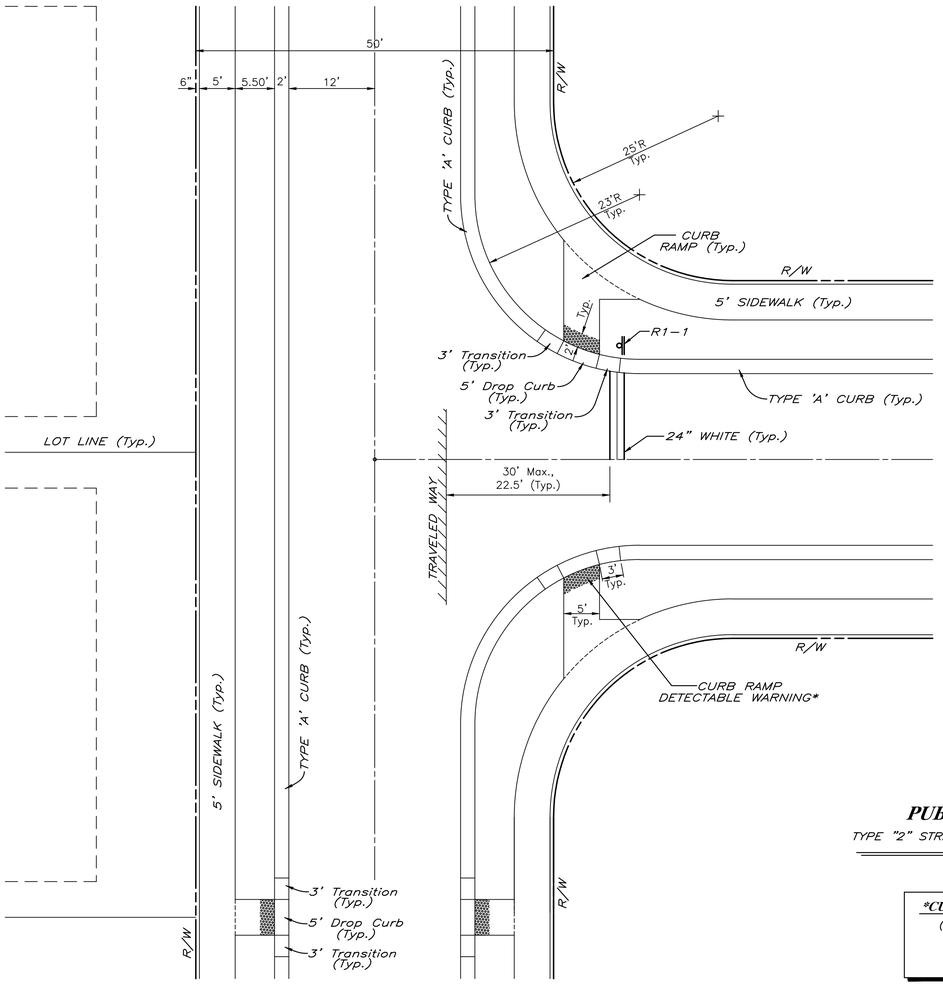

"T" INTERSECTION

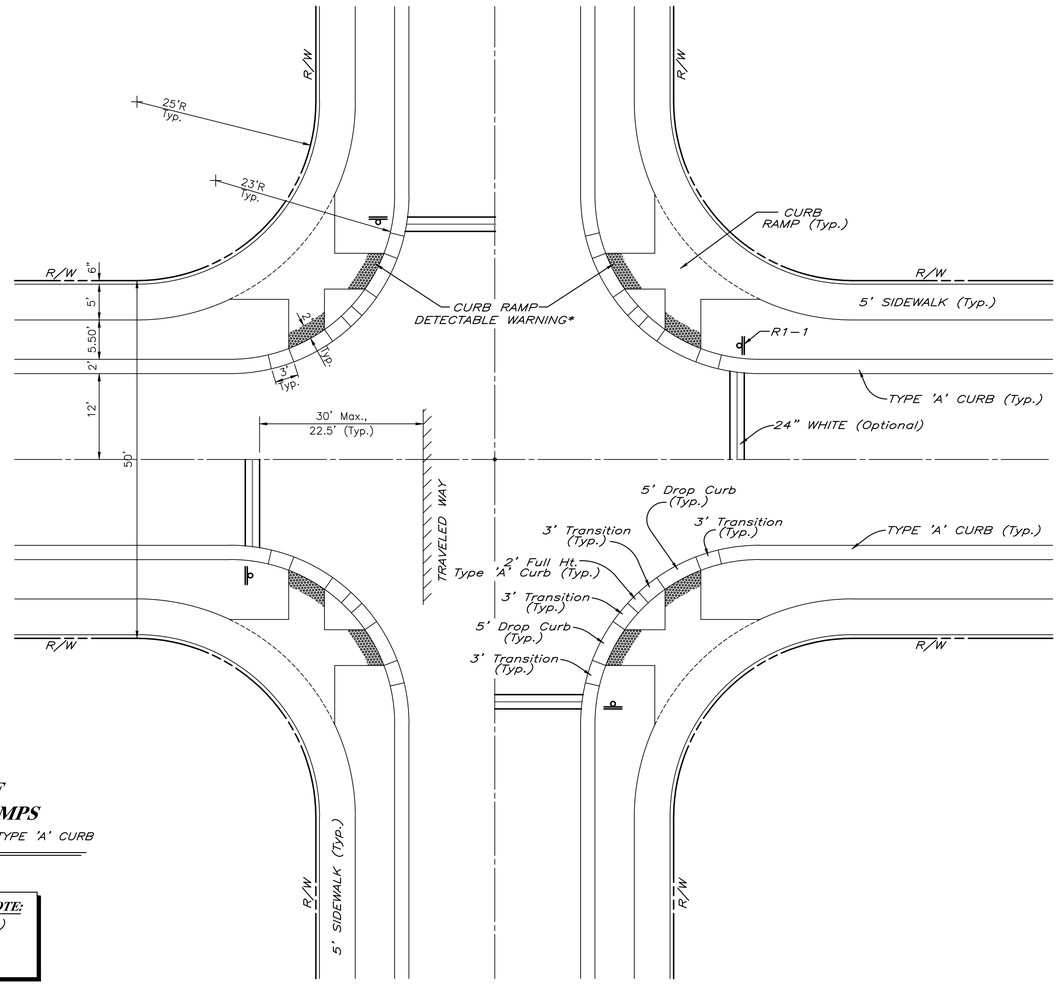

"CROSS" INTERSECTION

TYPICAL PLACEMENT OF PUBLIC SIDEWALK CURB RAMPS

TYPE "2" STREET – 24' ASPHALT PAVEMENT – TYPE 'A' CURB

SCALE: 1"=10'

CURB RAMP DETECTABLE WARNING NOTE:

(REFER TO LOCAL COLOR STANDARD)
BLACK – FDOT
YELLOW – CITY OF TAMPA
RED – HILLSBOROUGH COUNTY

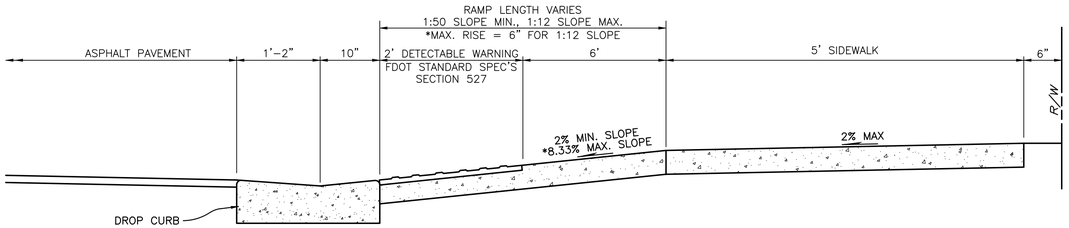

SIDEWALK RAMP PROFILE

NOT TO SCALE

R:\CONNERTON\YHL - CONNERTON\PARCEL 213\ENGINEERING\SWD1.DWG-21 OF 35 2015/07/28 4:59 PM BRYANT BOYLES

DATE	DESCRIPTION	BY
06-19-14	REVISE TITLE BLOCK & OWNER INFO	SDM

REVISIONS

Engineering Business Certificate of Authorization No. 28782
Landscape Architecture Certificate of Authorization No. LC26000405

HEIDT DESIGN

5806-B Breckenridge Parkway
Tampa, Florida 33610
Office: 813-253-5311
Fax: 813-464-7629
www.HeidtDesign.com

DATE:
EDWIN J. ROGERS P.E. NO. 50082
FLORIDA PROFESSIONAL ENGINEER

SIDEWALK DETAILS

JOB NO. CNT-CT-025	**CONNERTON VILLAGE TWO PARCEL 213**
DESIGN WERTZ	
DRAWN MIDDLETON	PREPARED FOR: **HAYMAN WOODS, L.L.C.**
DATE 5-14-2007	**Elevations based on National Geodetic Vertical Datum 1929 (NGVD 29)** Conversion from NGVD 29 to NAVD 88 = -0.85 Feet
FILE Swd1	**SHEET 21 OF 35 SHEETS**

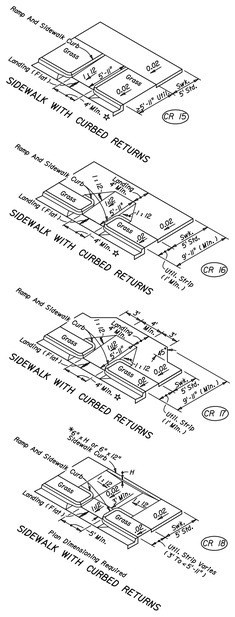

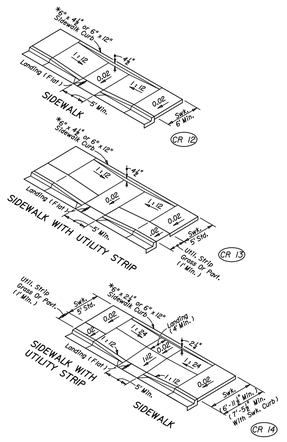

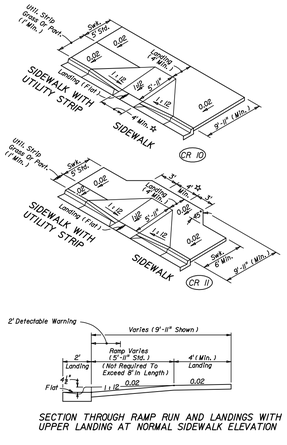

SECTION THROUGH RAMP RUN AND LANDINGS WITH UPPER LANDING AT NORMAL SIDEWALK ELEVATION

☆ Ramp Widths For Curb Ramps CR 10, CR 11, CR 15, CR 16, And CR 17 May Be Reduced To 3'-Min. In Restricted Conditions When Approved By The Engineer.

* For BACK OF SIDEWALK CURB OR BUFFER TRANSITION And For RAMP AND SIDEWALK CURB OPTIONS See Sheet 4.

DIMENSIONAL FEATURES FOR PUBLIC SIDEWALK CURB RAMPS WHERE RAMP AND LANDING DEPTH ARE RESTRICTED BY RIGHT OF WAY

PUBLIC SIDEWALK CURB RAMPS — Sheet No. 3 of 6 — Index No. 304

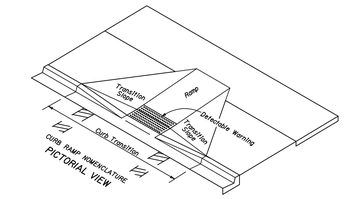

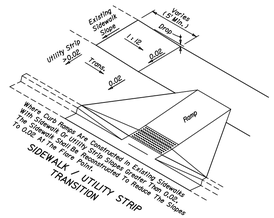

GENERAL NOTES

1. Public sidewalk curb ramps shall be constructed in the public right of way at locations that will provide continuous unobstructed pedestrian circulation paths to pedestrian areas, elements and facilities in the public right of way and to accessible pedestrian routes on adjacent sites. Curbed facilities with sidewalks and those without sidewalks are to have curb ramps constructed at all street intersections and at turnouts that have curbed returns. Partial curb returns shall extend to the limit prescribed by Index No. 515 to accommodate curb ramps. Ramps constructed at locations without sidewalks shall have a landing constructed at the top of each ramp, see Sheet 5.
2. The location and orientation of curb ramps shall be as shown in the plans.
3. Curb ramp running slopes of unrestrained sites shall not be steeper than 1 : 12 and cross slope shall be 0.02" or flatter. Transition slopes shall not be steeper than 1 : 12.

   When altering existing pedestrian facilities where existing site development precludes the accommodation of a ramp slope of 1 : 12, a running slope between 1 : 12 and 1 : 10 is permitted for a rise of 6" maximum and a running slope of between 1 : 10 and 1 : 8 is permitted for a rise of 3" maximum. Where compliance with the requirements for cross slope cannot be fully met, the minimum feasible cross slope shall be provided.

   Ramp running slope is not required to exceed 8' in length, except at sites where the plans specify a greater length.
4. If a curb ramp is located where pedestrians must walk across the ramp, then the walk shall have transition slopes to the ramp. The maximum slope of the transitions shall be 1 : 12. Ramps shall be designed so that lateral slopes of adjoining gutters, other improvements provide guidance ramp from that portion of curb perpendicular to the sidewalk. Improvements for guidance are not required at curb ramps for linear pedestrian traffic.
5. Curb ramp detectable warning surfaces shall extend the full width of the ramp and in the direction of travel 24" from the back of curb. Detectable warning surfaces shall be constructed in accordance with Specification 527. See Sheet 6 of 6 for detectable warning layouts. Transition slopes are not to have detectable warnings.
6. Where a curb ramp is constructed within existing curb, curb and gutter and/or sidewalk, the existing curb or curb and gutter shall be removed to the nearest joint beyond the curb transitions or to the extent that no remaining section of curb or curb and gutter is less than 5' long. The existing sidewalk shall be removed to the nearest joint beyond the transition slope or walk around or to the extent that no remaining section of sidewalk is less than 5' long. For details of Concrete Sidewalk see Index 300.
7. Alpha-numeric identifications are for reference (plans, permits, etc.).
8. Public sidewalk curb ramps are to be paid for as follows:
   Ramps, reconstructed sidewalks, walk around sidewalks, sidewalk landings and sidewalk curbs are to be paid for under the contract unit price for Sidewalk Concrete, (__" Thick), SY. Curb transitions and reconstructed curbs are to be paid for under the contract unit price for the parent curb, i.e., Curb Conc., (Type __), LF or Curb and Gutter Conc., (Type __), LF.

   When a separate pay item for the removal and disposal of existing curb, curb and gutter, and/or sidewalk is not provided in the plans, the cost of removal and disposal of these features shall be included in the contract unit price for new curb, curb and gutter and/or sidewalk respectively.
9. Acceptance Criteria for Detectable Warnings:
   (a) The ramp detectable warning surface shall be complete and uniform in color and texture
   (b) 90% of the individual truncated domes must comply with the design criteria
   (c) There may be no more than 4 non-complying domes in any one square foot of surface
   (d) No two adjacent domes may be non-compliant
   (e) Surface may not deviate more than 0.40" from a true plane
10. All sidewalk surfaces, ramp surfaces, and landings with a cross slope shown in this Index to be 0.02" shall be 0.02" maximum. All ramp surfaces and ramp transition slopes with a slope shown in this Index to be 1:12 shall be 1:12" maximum.

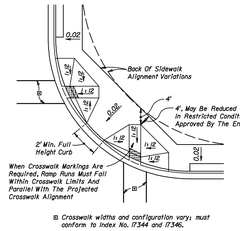

B Crosswalk widths and configuration vary; must conform to Index No. 17344 and 17346.

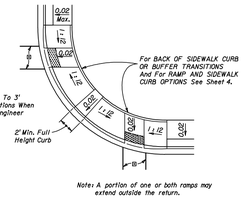

Note: A portion of one or both ramps may extend outside the return.

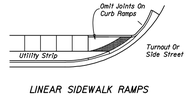

LINEAR SIDEWALK RAMPS

TYPICAL PLACEMENT OF PUBLIC SIDEWALK CURB RAMPS AT CURBED RETURNS

PUBLIC SIDEWALK CURB RAMPS — Sheet No. 1 of 6 — Index No. 304

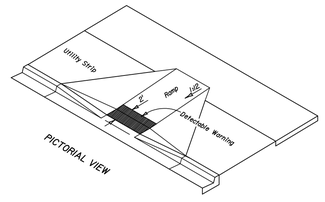

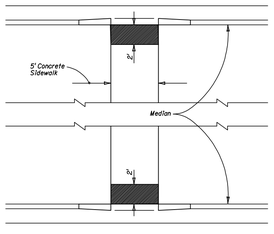

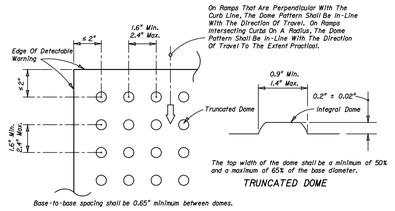

All Sidewalk Curb Ramps Shall Have Detectable Warning Surfaces That Extend The Full Width Of The Ramp And In The Direction Of Travel 24 Inches (600 mm) From The Back Of Curb.

CURB RAMP DETECTABLE WARNING DETAIL

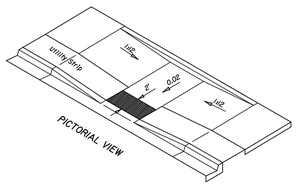

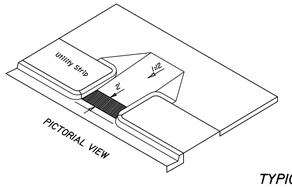

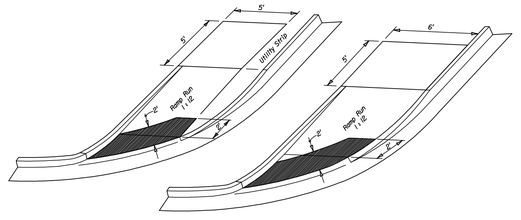

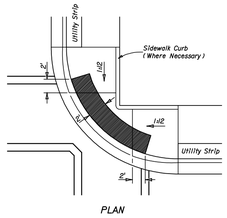

TYPICAL PLACEMENT OF DETECTABLE WARNING ON CURB RAMPS

PUBLIC SIDEWALK CURB RAMPS — Sheet No. 6 of 6 — Index No. 304

REVISIONS		
DATE	DESCRIPTION	BY
06-19-14	REVISE TITLE BLOCK & OWNER INFO	SDM

Engineering Business Certificate of Authorization No. 28782
Landscape Architecture Certificate of Authorization No. LC26000405

HEIDT DESIGN
5806-B Breckenridge Parkway
Tampa, Florida 33610
Office: 813-253-5311
Fax: 813-464-7629
www.HeidtDesign.com

DATE:
EDWIN J. ROGERS P.E. NO. 50082
FLORIDA PROFESSIONAL ENGINEER

SIDEWALK DETAILS

JOB NO. CNT-CT-025	CONNERTON VILLAGE TWO PARCEL 213
DESIGN WERTZ	
DRAWN MIDDLETON	PREPARED FOR: HAYMAN WOODS, L.L.C.
DATE 5-14-2007	Elevations based on National Geodetic Vertical Datum 1929 (NGVD 29) Conversion from NGVD 29 to NAVD 88 = -0.85 Feet
FILE Swd2	SHEET 22 OF 35 SHEETS

R:\CONNERTON\HWL - CONNERTON PARCEL 213\ENGINEERING\SWD2.DWG-22 OF 35 2015/07/28 4:59 PM BRYANT BOTLES

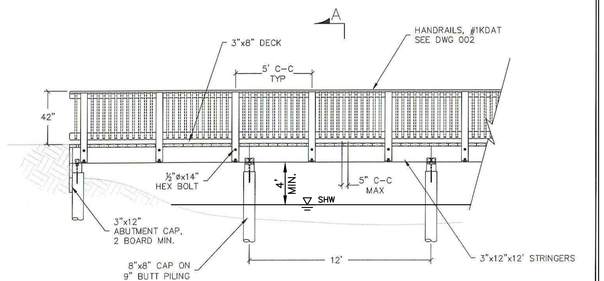

Elevation View
Typical

A
See Dwg 002

Note: Unless noted within, all lumber SYP, #2 Grade S4S, all hardware HDG.
All piling to be driven minimum 8' to 10'.

DRAWN BY: MP	V.FILE(S)	REVISIONS	DATE
CHKD BY: PE			
SCALE: 1/4"=1'-0"	DESIGN LOADING: Pedestrian		
	DESIGNATION: B-100-12	PROJECT NO: 03-002	
DESIGN PLANS FOR: Pile Supported Bridge Terra Verde Orlando, Florida			DWG NO. 001
PRELIMINARY	WORKING	CONSTRUCTION	

NABCO
North American Bridge Company

THESE DRAWINGS AND SITE CONTENTS ARE THE SOLE PROPERTY OF THE NORTH AMERICAN BRIDGE COMPANY AND ARE NOT TO BE COPIED, REPRODUCED OR USED IN ANY WAY WITHOUT PRIOR WRITTEN AGREEMENT OR COPYRIGHTS LAWS AND BE PURCHASED BY LAW

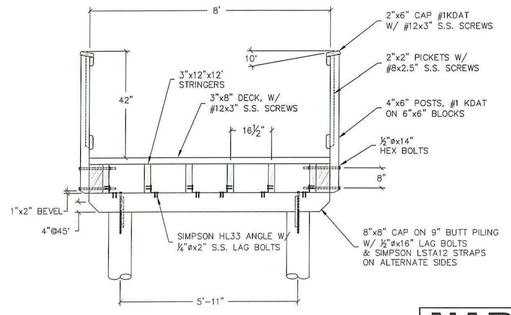

Section A–A
From Dwg 001

Note: Unless noted within, all lumber SYP, #2 Grade S4S, all hardware HDG.
All piling to be driven minimum 8' to 10'.

DRAWN BY: MP	V.FILE(S)	REVISIONS	DATE
CHKD BY: PE			
SCALE: 1/2"=1'-0"	DESIGN LOADING: Pedestrian		
	DESIGNATION: B-100-12	PROJECT NO: 03-002	
DESIGN PLANS FOR: Pile Supported Bridge Terra Verde Orlando, Florida			DWG NO. 002
PRELIMINARY	WORKING	CONSTRUCTION	

NABCO
North American Bridge Company

THESE DRAWINGS AND SITE CONTENTS ARE THE SOLE PROPERTY OF THE NORTH AMERICAN BRIDGE COMPANY AND ARE NOT TO BE COPIED, REPRODUCED OR USED IN ANY WAY WITHOUT PRIOR WRITTEN AGREEMENT OR COPYRIGHTS LAWS AND BE PURCHASED BY LAW

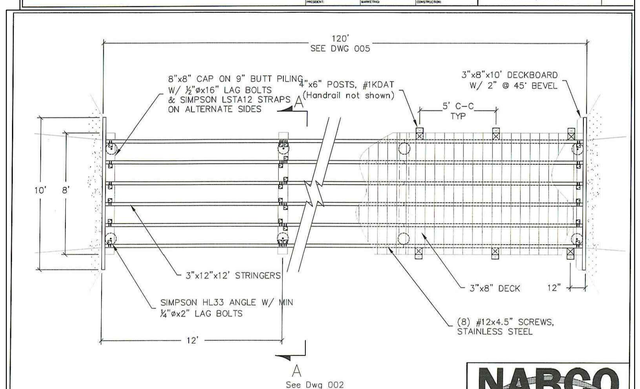

A
See Dwg 002

Plan View
Typical Details

Note: Unless noted within, all lumber SYP, #2 Grade S4S, all hardware HDG.
All piling to be driven minimum 8' to 10'.

DRAWN BY: MP	V.FILE(S)	REVISIONS	DATE
CHKD BY: PE			
SCALE: 1/4"=1'-0"	DESIGN LOADING: Pedestrian		
	DESIGNATION: B-100-12	PROJECT NO: 03-002	
DESIGN PLANS FOR: Pile Supported Bridge Terra Verde Orlando, Florida			DWG NO. 003
PRELIMINARY	WORKING	CONSTRUCTION	

NABCO
North American Bridge Company

THESE DRAWINGS AND SITE CONTENTS ARE THE SOLE PROPERTY OF THE NORTH AMERICAN BRIDGE COMPANY AND ARE NOT TO BE COPIED, REPRODUCED OR USED IN ANY WAY WITHOUT PRIOR WRITTEN AGREEMENT OR COPYRIGHTS LAWS AND BE PURCHASED BY LAW

NOTE:
TRAIL TO BE LOCATED TO MINIMIZE TREE AND SHRUB DISTURBANCE. EXISTING GROUND COVER SHOULD BE SAVED WHEREVER POSSIBLE

NOTE:
FINAL BOARDWALK LIMITS TO BE FLAGGED AND REVIEWED IN THE FIELD WITH DEVELOPER PRIOR TO INSTALLATION.

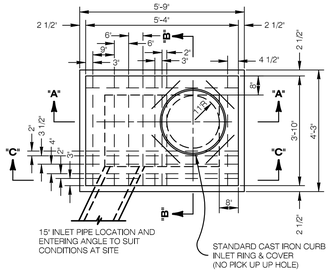

PLAN

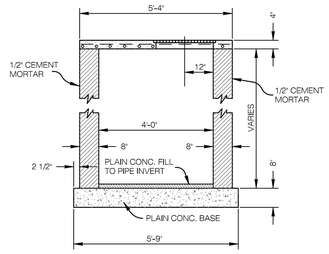

SECTION "A-A"

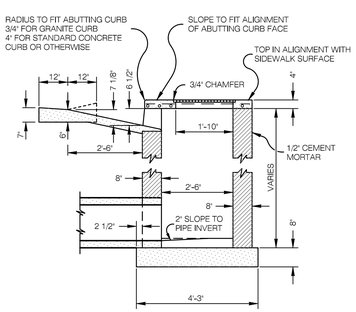

SECTION "B-B"

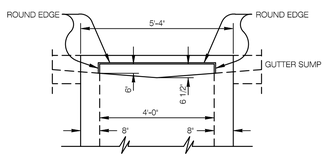

SECTION "C-C"

STANDARD STORM WATER CURB INLET TYPE 1

NOTES:
1) STRUCTURES LARGER THAN 4'x6' (INSIDE) SHALL BE PRECAST OR CAST-IN-PLACE.
2) ALL INSIDE BRICK WALLS TO BE PLASTERED WITH 1/2" MIN. OF 1:2 CEMENT MORTAR.

BAR SCHEDULE FOR TOP SLAB			
NO.	SIZE	LOCATION	LENGTH
8	1/2" ⏍	TRANSVERSE BARS	3'-6"
6	1/2" ⏍	LONGITUDINAL BARS	5'-1"
1	1/2" ⏍	LONGITUDINAL BARS	2'-8"
5	5/8" ⏍	TRAFFIC BEARING ONLY	2'-4"

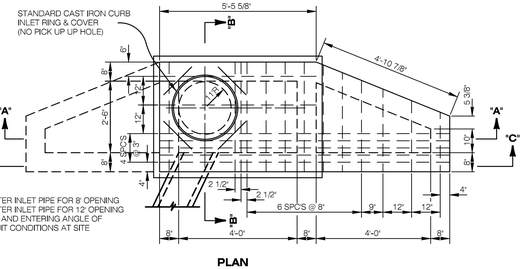

PLAN

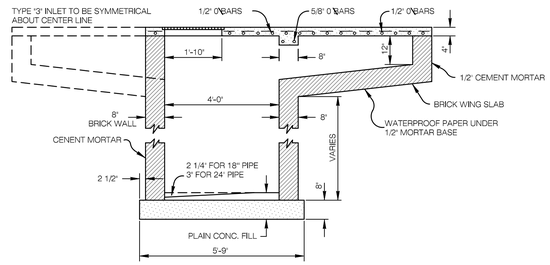

SECTION "A-A"

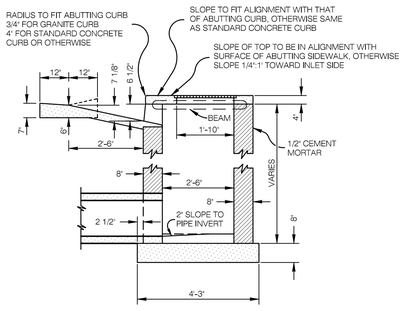

SECTION "B-B"

TYPE '2' - SINGLE WING WITH 8' LENGTH OF THROAT OPENING

TYPE '3' - DOUBLE WING WITH 12' LENGTH OF THROAT OPENING

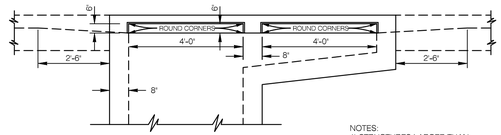

SECTION "C-C"

STANDARD STORM WATER CURB INLET TYPE 2 & 3

BAR SCHEDULE FOR TOP SLAB			
NO.	SIZE	LOCATION	LENGTH
8	1/2" ⏍	TRANSVERSE BARS - STRAIGHT	3'-6"
1	1/2" ⏍	TRANSVERSE BARS - STRAIGHT	3'-4"
1	1/2" ⏍	TRANSVERSE BARS - STRAIGHT	3'-0"
1	1/2" ⏍	TRANSVERSE BARS - STRAIGHT	2'-9"
1	1/2" ⏍	TRANSVERSE BARS - STRAIGHT	2'-5"
1	1/2" ⏍	TRANSVERSE BARS - STRAIGHT	2'-0"
2	5/8" ⏍	TRANSVERSE BARS - W/ HOOKED ENDS	3'-6"
5	1/2" ⏍	LONGITUDINAL BARS - STRAIGHT	9'-9"
1	1/2" ⏍	LONGITUDINAL BARS - STRAIGHT	6'-3"
1	1/2" ⏍	LONGITUDINAL BARS - STRAIGHT	5'-9"

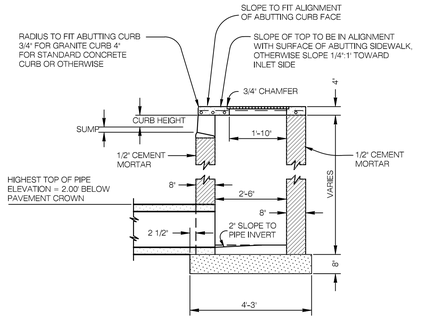

SECTION "B-B"
TYPE "F" CURB ONLY

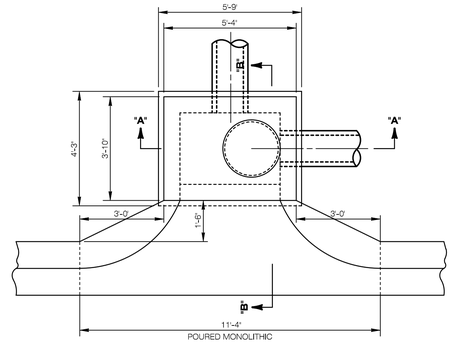

PLAN

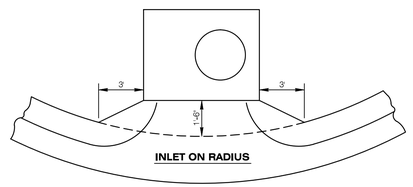

INLET ON RADIUS

STANDARD INLET FOR MIAMI GUTTER

NOTES:
1) STRUCTURES LARGER THAN 4'x6' (INSIDE) SHALL BE PRECAST OR CAST-IN-PLACE.
2) PAVE WITH BRICK AND MORTAR UP TO SPRING LINE WHEREVER TWO OR MORE PIPES ENTER ONE INLET TO PROVIDE A CHANNEL FOR FLOW OF WATER THROUGH INLET.

06-19-14	REVISE TITLE BLOCK & OWNER INFO	SDM
DATE	DESCRIPTION	BY
REVISIONS		

Engineering Business Certificate of Authorization No. 28782
Landscape Architecture Certificate of Authorization No. LC26000405
HEIDT DESIGN
5806-B Breckenridge Parkway
Tampa, Florida 33610
Office: 813-253-5311
Fax: 813-464-7629
www.HeidtDesign.com

DATE:
EDWIN J. ROGERS P.E. NO. 50082
FLORIDA PROFESSIONAL ENGINEER

DRAINAGE DETAILS

JOB NO. CNT-CT-025	**CONNERTON VILLAGE TWO PARCEL 213**
DESIGN WERTZ	
DRAWN MIDDLETON	PREPARED FOR: **HAYMAN WOODS, L.L.C.**
DATE 5-14-2007	Elevations based on National Geodetic Vertical Datum 1929 (NGVD 29) Conversion from NGVD 29 to NAVD 88 = -0.85 Feet
FILE DD1	**SHEET 23 OF 35 SHEETS**

R:\CONNERTON\WHL - CONNERTON\PARCEL 213\ENGINEERING\DD1.DWG-23 OF 35 2015/07/28 4:59 PM BRYANT BOYLES

SLAB DESIGNS - SQUARE AND RECTANGULAR STRUCTURES (TABLE 6)

(ALL SLABS 8" THICK EXCEPT AS NOTED - REINFORCING PARALLEL TO SHORT WAY AND LONG WAY)

SHORT-WAY SLAB DEPTH	SHORT-WAY SCHEDULE (Bars A)	LONG-WAY SLAB DEPTH	LONG-WAY SCHEDULE (Bars B)
SIZE: 3'-6" x UNLIMITED			
≥0.5'< 8'	B10	≥0.5'< 24'	B10
8' <13'	B5.5	24'-40'	B5.5
13' < 31'	C6.5		
31' - 40'	D7		
SIZE: 4' x UNLIMITED			
≥ 0.5'< 7'	B5.5	≥ 0.5'< 15'	B10
7' < 19'	C6.5	15' < 29'	B5.5
19' < 31'	D7	29'-40'	C6.5
31' - 40'	E5		
SIZE: 5' x 5'			
≥ 0.5'< 3'	C6.5	≥ 0.5'< 3'	C6.5
3'< 7'	B5.5	3' < 13'	C6.5
7' < 22'	C6.5	13' < 22'	D7
22'< 29'	D7	22' < 29'	D4.5
29' - 40'	E5	29' - 40'	E5
SIZE: 5' x 6'			
≥ 0.5' < 12'	C6.5	≥ 0.5'< 3'	C6.5
12' < 26'	D7	3'< 9'	B5.5
26' - 40'	E5	9' < 23'	C3.5
		23' < 35'	D4.5
		35' - 40'	E5
SIZE: 5' x 7'			
≥ 0.5' < 10'	C6.5	≥0.5' <10'	B5.5
10' < 20'	D7	10' < 31'	C3.5
20'< 34'	E5	31' - 40'	D4.5
34' - 40'	F5		
SIZE: 5' x 8'			
≥ 0.5'< 7'	C6.5	≥ 0.5'< 8'	B10
7' < 13'	D7	8' < 17'	B5.5
13' < 24'	E5	17' < 25'	C6.5
24' - 40'	F5	25' - 40'	C3.5
SIZE: 5' x 9'			
≥ 0.5'< 8'	C6.5	≥ 0.5'< 14'	B10
8' < 14'	D7	14' < 24'	B5.5
14' < 25'	E5	24' < 34'	C6.5
25' - 40'	F5	34' - 40'	C3.5
SIZE: 5' x UNLIMITED			
≥ 0.5'< 8'	C6.5	≥ 0.5'< 14'	B10
8' < 14'	D7	14' < 24'	B5.5
14' < 25'	E5	24' < 34'	C6.5
25' - 40'	F5	34' - 40'	C3.5

SHORT-WAY SLAB DEPTH	SHORT-WAY SCHEDULE (Bars A)	LONG-WAY SLAB DEPTH	LONG-WAY SCHEDULE (Bars B)
SIZE: 6' x 6'			
≥ 0.5' < 13'	C6.5	≥ 0.5' < 10'	C3.5
13' < 23'	D7	10' < 18'	D4.5
23' - 40'	E5	18' < 27'	E5
		27' <33'	E3.5
		33' - 40'	F5
SIZE: 6' x 7'			
≥ 0.5'< 8'	C6.5	≥ 0.5'< 8'	C6.5
8' < 16'	D7	8' < 12'	C3.5
16' < 28'	E5	12' < 21'	D4.5
28' - 40'	F5	21' < 28'	E5
		28' < 35'	E3
		35' - 40'	F5
SIZE: 6' x 8'			
≥ 0.5'< 6'	C6.5	≥ 0.5'< 6'	B5.5
6' < 13'	D7	6' < 11'	C6.5
13' < 22'	E5	11' < 17'	C3.5
22' < 35'	F5	17' < 22'	D4.5
35' - 40'	G5	22' < 32'	E5
		32' - 40'	E3.5
SIZE: 6' x 9'			
≥ 0.5'< 8'	D7	≥ 0.5'< 8'	B5.5
8' < 14'	E5	8' < 14'	C6.5
14' < 24'	F5	14' < 21'	C3.5
24' - 34'	G5	21' < 25'	D4.5
		25' - 34'	E5
SIZE: 6' x UNLIMITED			
≥ 0.5'< 8'	D7	≥ 0.5'< 8'	B5.5
8' < 14'	E5	8' < 14'	C6.5
14' < 24'	F5	14' < 21'	C3.5
24' - 34'	G5	21' < 25'	D4.5
		25' - 34'	E5
SIZE: 7' x 7'			
≥ 0.5'< 8'	C6.5	≥ 0.5'< 4'	C6.5
8' < 15'	D7	4'< 7'	C3.5
15' < 26'	E5	7' < 11'	D4.5
26' - 40'	F5	11' <22'	E3
		22' < 32'	F3.5
		32' - 40'	G3.5
SIZE: 7' x 8'			
≥ 0.5'< 5'	C6.5	≥ 0.5'< 5'	C6.5
5' < 11'	D7	5'< 8'	C3.5
11' < 19'	E5	8' < 13'	D4.5
19' < 30'	F5	13' < 22'	E3
30' - 40'	G5	22' < 30'	F3.5
		30' - 40'	G3.5
SIZE: 7' x 9'			
≥ 0.5'< 9'	D7	≥ 0.5'< 7'	C6.5
9' <15'	E5	7' < 10'	C3.5
15' < 25'	F5	10' < 14'	D4.5
25'< 34'	G5	14' < 21'	E5
		21' <29'	F5
		29' - 34'	F3.5

SHORT-WAY SLAB DEPTH	SHORT-WAY SCHEDULE (Bars A)	LONG-WAY SLAB DEPTH	LONG-WAY SCHEDULE (Bars B)
SIZE: 8' x 8'			
≥ 0.5' < 10'	D7	≥ 0.5'< 9'	D4.5
10' < 19'	E5	9' < 13'	E5
19' - 30'	F5	13' < 18'	F5
		18' < 23'	F3.5
		23' - 30'	G3.5
SIZE: 8' x 9'			
≥ 0.5'< 8'	D7	≥ 0.5'< 7'	D7
8' <14'	E5	7'< 9'	D4.5
14' < 23'	F5	9' < 15'	E3.5
23' - 31'	G3.5	15' < 20'	F5
		20' < 23'	F3.5
		23' - 31'	G3.5
SIZE: 9' x 9'			
≥ 0.5'< 8'	D7	≥ 0.5'< 7'	D4
8' <14'	E5	7' < 10'	E5
14' < 22'	F5	10' < 17'	F3.5
		17' < 22'	G3.5
SIZE: 9' x 9' x 10" SLAB THICKNESS			
22' < 36'	F5	22' < 31'	F3.5
36' - 40'	G5	31' - 40'	G3.5
SIZE: 10' x 10' x 10" SLAB THICKNESS			
≥ 0.5'< 7'	C6.5	≥ 0.5'< 6'	C6.5
7' <10'	D7	6'< 9'	D4.5
10' < 18'	E5	9' < 15'	E5
18' < 27'	F5	15' < 22'	F5
27' - 32'	G5	22' - 32'	G3.5
SIZE: 12' x 12' x 12" SLAB THICKNESS			
≥ 0.5' < 10'	D7	≥ 0.5'< 8'	D7
10' < 16'	E5	8' < 14'	E5
16' < 25'	F5	14' < 22'	F5
25' - 35'	G5	22' < 30'	G5
		30' - 35'	H4

REINFORCING SCHEDULE

SCHEDULE	GRADE 60 BARS OR 65 KSI & 70 KSI WELDED WIRE FABRIC: AREA (in²/ft)	MAX. SPACING: BARS	MAX. SPACING: WWF
A12	0.20	12"	8"
A6	0.20	6"	5"
B10	0.24	10"	8"
B5.5	0.24	5½"	5"
C6.5	0.37	6½"	6"
C3.5	0.37	3½"	3"
D7	0.53	7"	6"
D4.5	0.53	4½"	4"
E5	0.73	5"	4"
E3	0.73	3"	3"
F5	1.06	5"	4"
F3.5	1.06	3½"	3"
G5	1.45	5"	4"
G3.5	1.45	3½"	3"
H4	1.75	4"	3"

SLAB DESIGNS - ROUND STRUCTURES (TABLE 7)

SLAB DEPTH	SLAB THICKNESS	REINF. (2 WAYS) SCHEDULE
SIZE: 3'-6" DIAMETER		
≥ 2' - 15'	6" Precast	C6.5
≥0.5' < 30'	8"	A6
30' - 40'	8"	B5.5
SIZE: 4'-0" DIAMETER		
≥ 0.5'< 19'	8"	A6
19' < 30'	8"	B5.5
30' - 40'	8"	C6.5
SIZE: 5'-0" DIAMETER		
≥ 0.5'< 15'	8"	B5.5
15' < 26'	8"	C6.5
26' < 35'	8"	D7
35' - 40'	8"	D4.5
SIZE: 6'-0" DIAMETER		
≥ 0.5'< 9'	8"	B5.5
9' < 15'	8"	C6.5
15' < 22'	8"	C3.5
22' < 30'	8"	D4.5
30' < 40'	8"	E5
SIZE: 7'-0" DIAMETER		
≥ 0.5'< 8'	8"	C3.5
8' < 16'	8"	D4.5
16' < 23'	8"	E5
23' < 27'	8"	E3
27' - 40'	8"	F3.5
SIZE: 8'-0" DIAMETER		
≥ 0.5'< 10'	8"	D4.5
10' < 16'	8"	E5
16' < 19'	8"	E3
19' < 29'	8"	F3.5
29' - 40'	10"	F5
SIZE: 10'-0" DIAMETER		
≥ 0.5'< 12'	10"	D4.5
12' < 20'	10"	E5
20' < 28'	10"	F5
28' - 40'	10"	G3.5
SIZE: 12'-0" DIAMETER		
≥ 0.5'< 8'	10"	D4.5
8' < 13'	10"	E5
13' < 18'	10"	F5
18' < 26'	10"	G3.5
26' - 40'	12"	G3.5

WALL DESIGNS - RECTANGULAR STRUCTURES (TABLE 8)

VERTICAL REINFORCING: WALL DEPTH	VERTICAL: SCHEDULE (Inside)	VERTICAL: SCHEDULE (Outside)	HORIZONTAL REINFORCING: WALL DEPTH	HORIZONTAL: SCHEDULE (Inside)	HORIZONTAL: SCHEDULE (Outside)	WALL THICKNESS
SIZE: 3'-6" & RISERS						
≥1.17' - 40'	A12		≥ 1.17' < 10'	B10		6"/8"
			10' < 18'	B5.5		6"/8"
			18' < 29'	C6.5		6"/8"
			29' - 40'	C3.5		6"/8"
SIZE: 4'-0"						
≥1.17' - 40'	A12		≥ 1.17' < 6'	B10		6"/8"
			6' < 10'	B5.5		6"/8"
			10' < 20'	C6.5		6"/8"
			20' < 28'	C3.5		6"/8"
			28' - 40'	D4.5		6"/8"
SIZE: 5'-0"						
≥1.17' - 40'	A12		≥ 1.17' < 5'	B5.5		6"/8"
			5' < 9'	C6.5		6"/8"
			9' < 15'	C3.5		6"/8"
			15' < 22'	D4.5		6"/8"
			22' - 40'	E3		8"
SIZE: 6'-0"						
≥1.17' < 26'	A12		≥ 1.17' < 9'	C3.5		6"/8"
			9' < 15'	D4.5		6"/8"
			15' < 26'	E3		8"
	Inside	Outside		Inside	Outside	
26' - 40'	A12	A12	26' - 40'	D7	D7	8"
SIZE: 7'-0"						
	Inside	Outside		Inside	Outside	
≥1.17' < 25'	A12	A12	≥ 1.17' < 7'	B10	B10	8"
25' - 40'	B10	B10	7' < 10'	B5.5	B5.5	8"
			10' < 20'	C6.5	C6.5	8"
			20' < 30'	D7	D7	8"
			30' - 40'	E5	E5	8"
SIZE: 8'-0"						
	Inside	Outside		Inside	Outside	
≥1.17' < 20'	A12	A12	≥ 1.17' < 6'	B5.5	B5.5	8"
20' - 40'	C6.5	C6.5	6' < 13'	C6.5	C6.5	8"
			13' < 22'	D7	D7	8"
			22'< 31'	E5	E5	8"
			31' - 40'	F5	F5	8"
SIZE: 9'-0"						
	Inside	Outside		Inside	Outside	
≥1.17' < 12'	A12	A12	≥ 1.17' < 8'	C6.5	C6.5	8"
12' < 28'	C6.5	C6.5	8' < 15'	D7	D7	8"
28' - 40'	D7	D7	15' < 23'	E5	E5	8"
			23' - 40'	F5	F5	8"
SIZE: 10'-0"						
	Inside	Outside		Inside	Outside	
≥1.17' < 10'	B10	B10	≥ 1.17' < 10'	D7	D7	8"
10' < 21'	C6.5	C6.5	10' < 17'	E5	E5	8"
21' < 26'	D7	D7	17' < 26'	F5	F5	8"
26' - 40'	C6.5	C6.5	26' - 40'	F5	F5	10"
SIZE: 12'-0"						
	Inside	Outside		Inside	Outside	
≥1.17' < 10'	B10	B10	≥ 1.17' < 10'	D7	D7	10"
10' < 21'	C6.5	C6.5	10' < 17'	E5	E5	10"
21' - 40'	D7	D7	17' < 26'	F5	F5	10"
			26' - 40'	G5	G5	10"
SIZE: 20'-0"						
	Inside	Outside		Inside	Outside	
≥1.17' < 10'	C6.5	C6.5	≥ 1.17' < 10'	E5	E5	10"
10' < 17'	D7	D7	10' < 17'	F5	F5	10"
17' - 30'	E5	E5	17' - 30'	G5	G5	10"

GENERAL NOTES

1. Size is the inside dimension(s) of a structure.
2. Slab reinforcement is appropriate for top, intermediate, and bottom slabs.
3. Bottom Slabs for precast 3'-6" x 3'-6" rectangular structures at 15' depth or less, may be 6" thick.
4. Slab depth is measured from finished grade to top of slab.
5. Wall depth is measured to the top of the bottom slab for boxes and to the top of the intermediate slab for risers.
6. Wall height is the distance between top of lower slab to bottom of upper slab. Maximum wall height is 12' for wall lengths exceeding 5', or 10' for wall lengths exceeding 12'.
7. Wall lengths exceeding 6'-0" require two layers of reinforcing (See Table 8) with 2" of cover from the horizontal bars to the inside and outside faces for each layer.
8. Wall lengths exceeding the dimensions or depths shown in Table 8, or 12'-0" diameter require a special design.
9. Wall thickness and reinforcing for rectangular structures is the same for both long and short sides.

STRUCTURE BOTTOMS TYPE J AND P

Sheet No. 3 of 3

Index No. 200

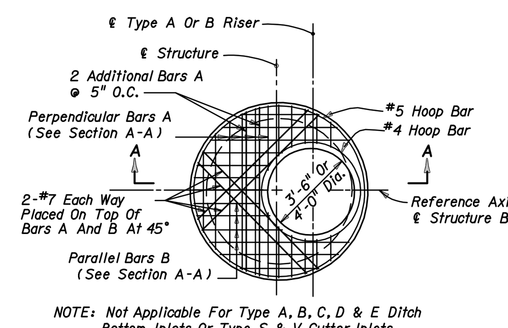

NOTE: Not Applicable For Type A, B, C, D & E Ditch Bottom Inlets Or Type S & V Gutter Inlets. See Index Nos. 220, 221, 230, 231 & 232.

TOP SLAB REINFORCING STEEL DIAGRAM (ALTERNATE A)

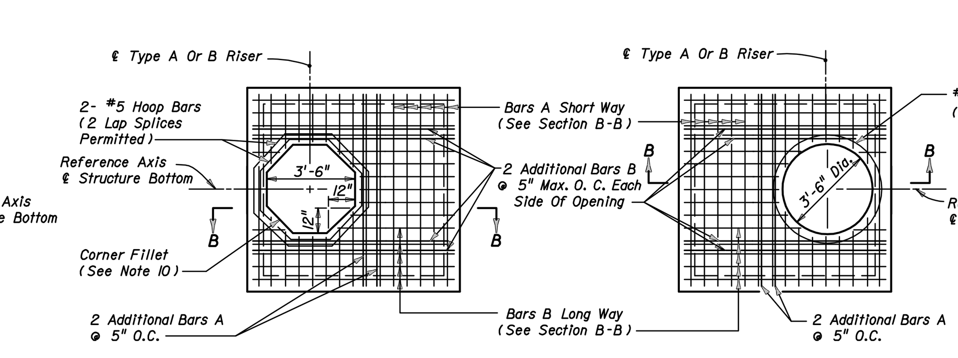

SQUARE OPENING WITH CORNER FILLETS

ROUND RISER OPENING

TOP SLAB REINFORCING STEEL DIAGRAM (ALTERNATE B)

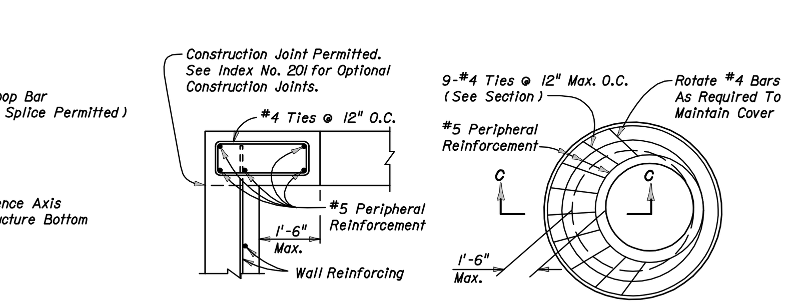

SPECIAL TOP SLAB *

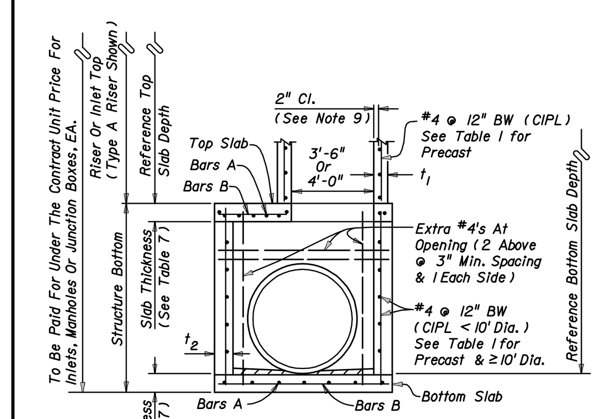

SECTION A-A (ALTERNATE A)

*NOTE: When the inside diameter of a round structure is not more than 1'-6" larger than the opening in the riser or top slab, the top of the structure or riser shall be constructed according to the "Special Top Slab" details on this sheet.

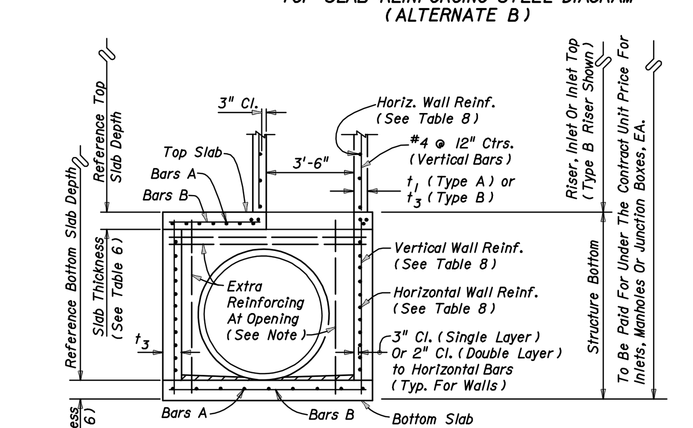

SECTION B-B (ALTERNATE B)

NOTE: Provide one extra #4 bar reinforcement each side of each opening and two extra #4 bars at 3" min. spacing above each opening.

ROUND STRUCTURE BOTTOMS (ALTERNATE A) & ROUND RISERS - TABLE 1

Wall Thickness (t_1 & t_2) and Vertical & Horizontal Areas of Reinforcement (A_s)

Type	Structure / Riser Diameter (feet)	Cast-In-Place Items (Class II Concrete): t_1 Riser (inches)	Cast-In-Place: t_2 Bottom (inches)	Cast-In-Place: A_s (in²/ft)	Precast (Class II Concrete): t_1 Riser (inches)	Precast: t_2 Bottom (inches)	Precast: A_s (in²/ft)	ASTM C478: t_1 or t_2 (inches)	ASTM C478: A_s*** (in²/ft)
P	3'-6"	6	8	0.20	6	8	0.20	4**	0.105
P	4'-0"	6	8	0.20	6	8	0.20	5**	0.120
J	5'-0"	-	8	0.20	-	8	0.20	6**	0.150
J	6'-0"	-	8	0.20	-	8	0.20	6	0.180
J	7'-0"	-	8	0.20	-	8	0.20	7	0.210
J	8'-0"	-	8	0.20	-	8	0.24	8	0.240
J	10'-0"	-	10	0.40##	-	10	0.40##	10	0.300
J	12'-0"	-	10	0.40##	-	12	0.40##	12	0.360

TABLE 1 NOTES:
- ## Provide 0.20 eq. in²/ft at each face, 12" max. bar spacing.
- ** Modified minimum wall thickness
- *** Min. total circumferential reinforcement for continuous steel hoops: A_s = 0.50 sq.in for riser section height equal or less than 2'-0" (2 hoop min.) A_s = 0.75 sq.in for riser section height more than 2'-0" up to 4'-0" (3 hoop min.)

Areas of reinforcing for precast items are based on Grade 60 reinforcing;
No reduction in the area of reinforcement is allowed for welded wire fabric in Table 1;
Area of vertical reinforcing may be reduced in accordance with ASTM C478.

GENERAL NOTES

1. Standard structure bottoms 4'-0" diameter and smaller (Alt. A) and 3'-6" square (Alt. B) are designated Type P. Larger standard structure bottoms are designated Type J. Risers are permitted for all structures. Round risers are designated Type A, square risers are designated Type B.
2. Walls of circular structures (Alt. A) constructed in place may be of brick or reinforced concrete. Precast and rectangular structures (Alt. B) shall be constructed of reinforced concrete only.
3. Wall thickness and reinforcement are for either reinforced cast-in-place or precast concrete units except that precast circular units may be furnished with walls in accordance with ASTM C478 (see modified wall thicknesses in Table 1).
4. Top and bottom slab thickness and reinforcement are for precast and cast-in-place construction. All concrete shall be of Class II concrete, except use Class IV concrete when shown in the Plans, for structures located in extremely aggressive environments. Concrete as specified in ASTM C478 (4000 psi) may be used in lieu of Class II concrete for precast items manufactured in accordance with Specifications Section 449.
5. All reinforcement shown is ASTM A615/A615M Grade 60 steel, deformed bar. Equivalent area Grade 40 steel or equivalent area ASTM A185 (smooth) or ASTM A497 (deformed) welded wire fabric may be substituted according to Index No. 201, unless otherwise noted.
6. Alt. A or Alt. B structure bottoms may be used in conjunction with curb inlet tops Types 1, 2, 3, 4, 5, 6, 9, and 10, and any manhole or junction box unless otherwise shown in the plans or other standard drawings. Alt. B structure bottoms may be used in conjunction with curb inlet Types 7 & 8, or any ditch bottom inlet unless otherwise shown in the plans or other standard drawings.
7. Rectangular structures may be rotated as directed by the Engineer in order to facilitate connections between the structure walls and storm sewer pipes.
8. Except when ACI hooks are specifically required, reinforcement top and slab shall be straight embedment.
9. All reinforcement must have 2" minimum cover except for 3'-6" diameter precast circular units manufactured under ASTM C478, keyed construction joints, and pipe openings must all have 1½" minimum cover, unless otherwise shown. Additional bars used to restrain hole formers for precast structures may be left flush with the hole surface. Cut or bend reinforcement at pipe openings to maintain cover. Exposed ends of reinforcing at precast pipe openings and grouted joints must be removed to 1" below the concrete surface and sealed with a Type F epoxy in accordance with Specification Section 926. Horizontal steel in rectangular structures shall be lapped a minimum of 30 bar diameters or by standard hooks at corners.
10. The corner fillets shown are necessary for rectangular structures used with circular risers and inlet throats and when used on skew with rectangular risers, inlets and inlet throats. Fillets will be required in the top slab of the Alt. A structure bottoms when used with the Alt. B risers. Each fillet shall be reinforced with two #5 bars.
11. Inlet throats, riser or manhole tops shall be secured to structures as shown on Index No. 201.
12. Structures with depths over 14' below the mean high water table are to be checked for floatation by the designer of the drainage project.
13. Units larger than specified standards may be substituted at the contractor's option when these units will not cause or increase the severity of utility conflicts. Such larger units shall be furnished at no additional cost to the Department. Larger Alt. A units cannot replace Alt. B units without approval of the Engineer. This note applies to this Index only.
14. For manhole and junction box tops, for frames and covers, and, for supplementary details see Index No. 201.
15. Type J structure bottoms must have a minimum 6'-0" wall height when possible, for maintenance access.

SQUARE & RECTANGULAR STRUCTURES (ALTERNATE B) - TABLE 2

Type	Wall Length (feet)	Max. Depth (feet)	Wall Thickness (t_3): C-I-P (in)	Wall Thickness (t_3): Precast (in)
P	≤ 3'-6"	40	6 Riser 8 Bottom	6
J	4'-0"	40	8	6
J	5'-0"	22	—	6
J	6'-0"	15	—	6
J	5'-0" to 9'-0"	40	8	8
J	10'-0"	26	8	8
J	≥ 10'-0"	40	10	10

TABLE 2 NOTES:
See Table 8 for Reinforcing Schedule.

STRUCTURE BOTTOMS TYPE J AND P

Sheet No. 1 of 3

Index No. 200

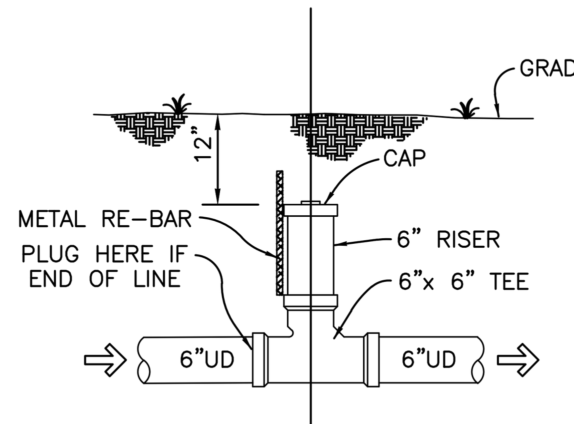

SECTION

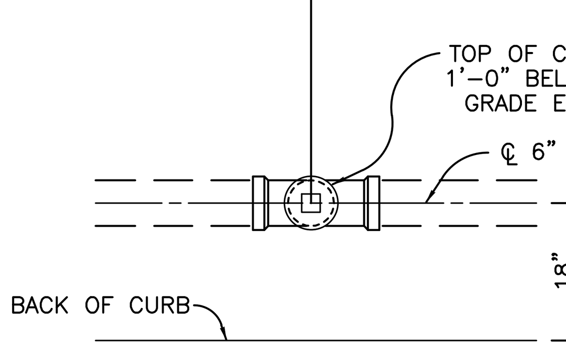

PLAN

*CITY OF TAMPA ONLY

UNDERDRAIN CLEANOUT DETAIL

NOTE:
LOCATION OF CLEANOUT TO BE MARKED ON CURB.

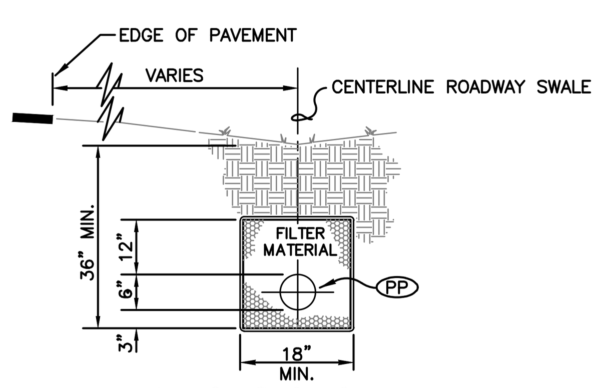

TRENCH SECTION

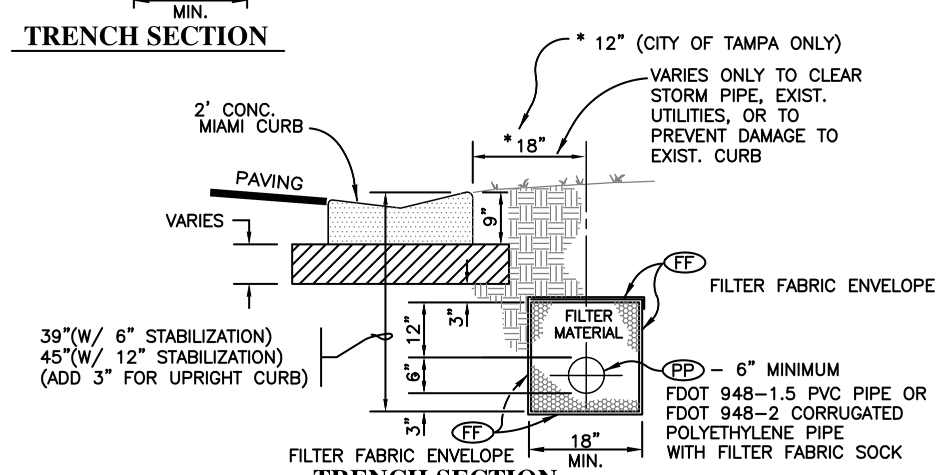

TRENCH SECTION

FINE AGGREGATE — NOTES

1. Minimum grade on underdrain pipe shall be 0.2%
2. Fine aggregate shall be quartz sand meeting the requirements of Sections 902-4 of the Standard Specifications.
3. Non-perforated shall be used for all roadway crossings. Perforated pipe shall not be placed under street pavement.
4. Filter fabric shall be Type D-3; in accordance with FDOT Index 199.
5. All piping shall meet FDOT 948-1.5 Standards for PVC Pipe and FDOT 948-2 for Corrugated Polyethylene Pipe.
6. When Corrugated Polyethylene tubing with slots or 360° perforations is used in conjunction with fine aggregate, a filter fabric sock meeting 948-3 is required.
7. FDOT and local governing agencies may have minimum standards which may exceed those referenced above. Contractor shall install underdrain in accordance with FDOT and local governing districts' minimum standards and regulations.
8. Filter material (fine aggregate) shall be completely wrapped in filter fabric. All filter fabric shall overlap a minimum of 1' (12 inches).

UNDERDRAIN DETAIL

(FOR FINE AGGREGATE)

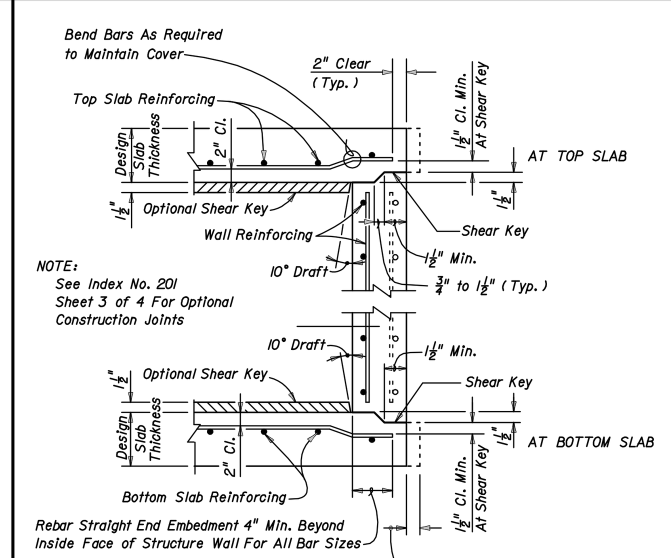

TYPICAL SLAB TO WALL DETAILS FOR PRECAST STRUCTURES

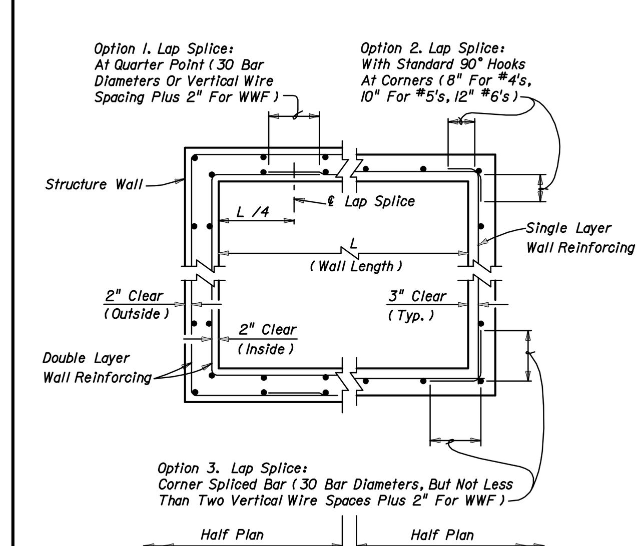

WALL REINFORCING SPLICE DETAILS (ALTERNATE B)

TABLE 3 - MINIMUM STRUCTURE SIZES FOR SINGLE PIPE CONNECTION PER SIDE

PIPE SIZE	RECTANGULAR Side Dimension (L): Single Pipe Per Side	Note Number	ROUND Diameter (D): Single Pipe or θ=180°	ROUND: 2 to 4 Pipes θ=90°
18"	3'-6"		3'-6"	4'-0"
24"	3'-6"		3'-6"	5'-0"
30"	3'-6" / 4'-0"	2	4'-0"	6'-0"
36"	4'-0" / 5'-0"	3	5'-0"	7'-0"
42"	5'-0"		6'-0"	7'-0"
48"	6'-0"		6'-0"	8'-0"
54"	6'-0"		7'-0"	10'-0"
60"	7'-0"		7'-0"	10'-0"
66"	7'-0" / 8'-0"	4	8'-0"	12'-0"
72"	8'-0"		8'-0"	12'-0"
78"	9'-0"		10'-0"	12'-0"
84"	9'-0"		12'-0"	N/A

TABLE 3 NOTES:
1. For Round Structures sizes with variable angles between pipes and variable pipe sizes, refer to the FDOT Storm Drain Handbook.
2. For 3'-6" Precast Square Structure Bottoms, 30" Pipes with similar invert elevations are not permitted in adjacent walls. Use 4'-0" Side Dimensions when 30" pipe openings are required on adjacent walls and the difference in flow lines is less than 3'-0".
3. For 4'-0" Precast Square Structure Bottoms, 36" Pipes with similar invert elevations are not permitted in adjacent walls. Use 5'-0" Side Dimensions when 36" pipe openings are required on adjacent walls and the difference in flow lines is less than 3'-0".
4. For 7'-0" Precast Square Structure Bottoms, 66" Pipes with similar invert elevations are not permitted in adjacent walls. Use 8'-0" Side Dimensions when 66" pipe openings are required on adjacent walls and the difference in flow lines is less than 4'-0".

TABLE 4 - MINIMUM SIZES FOR MULTIPLE PARALLEL PIPE CONNECTIONS FOR RECTANGULAR STRUCTURE BOTTOMS

PIPE SIZE	PIPE SPACING (S)	MINIMUM WALL LENGTH (L) FOR NUMBER OF PARALLEL PIPES: 2	3	4
18"	2'-10"	6'-0"	8'-6"	11'-0"
24"	3'-5"	6'-6"	10'-0"	13'-6"
30"	4'-3"	8'-0"	12'-6"	16'-6"
36"	5'-1"	9'-6"	14'-6"	19'-6"
42"	6'-0"	11'-0"	17'-0"	-
48"	6'-9"	12'-6"	19'-0"	-
54"	7'-8"	14'-0"	-	-
60"	8'-6"	15'-0"	-	-
66"	9'-0"	16'-6"	-	-
72"	10'-0"	18'-0"	-	-
78"	10'-9"	19'-0"	-	-
84"	11'-8"	20'-6"	-	-

TABLE 4 NOTES:
1. Minimum wall lengths based on precast structures, using concrete pipe with maximum skew angles per Table 5.
2. Wall lengths exceeding 16'-0" require special designs.

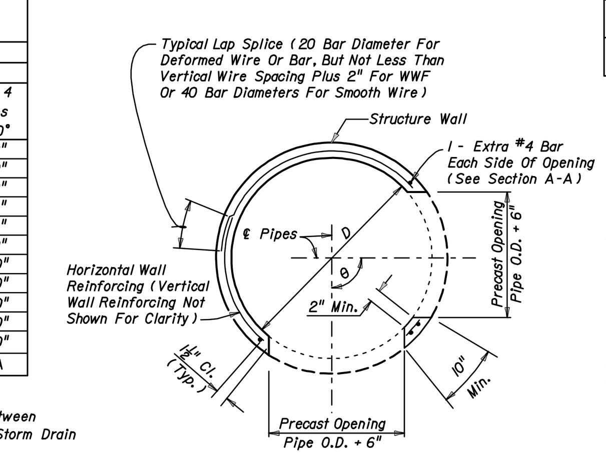

PRECAST ROUND STRUCTURES WITH MULTIPLE PIPE CONNECTIONS

TABLE 5 - MAXIMUM PIPE SKEW FOR PRECAST ROUND OPENINGS

	WALL THICKNESS	PIPE SIZE: 18"	24"	30"	36"	42"	48"	54"	60"	66"	72"	78"	84"
MAXIMUM SKEW ANGLE	8"	19°	17°	16°	16°	15°	14°	14°	13°	13°	13°	12°	12°
	6"	21°	20°	18°	17°	17°	16°	15°	15°	14°	14°	13°	13°

TABLE 5 NOTES:
These values are based on 2" clearance for precast structures. Larger skews are possible for Cast-In-Place Structures or elliptical pipe openings when approved by the Engineer.

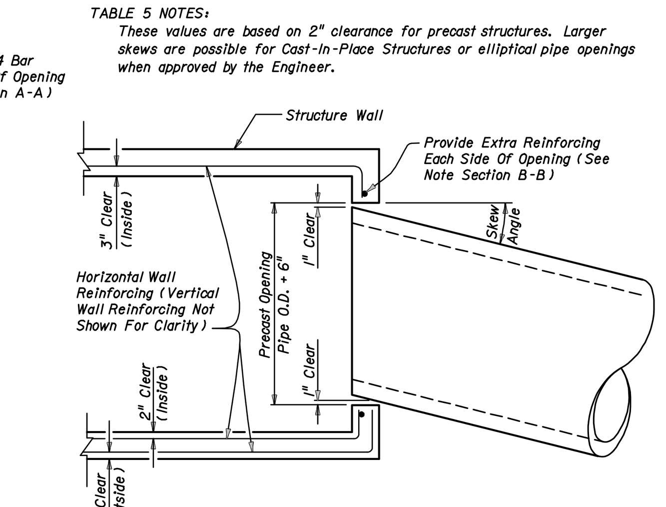

MAXIMUM PIPE SKEW FOR PRECAST ROUND OPENINGS PLAN VIEW

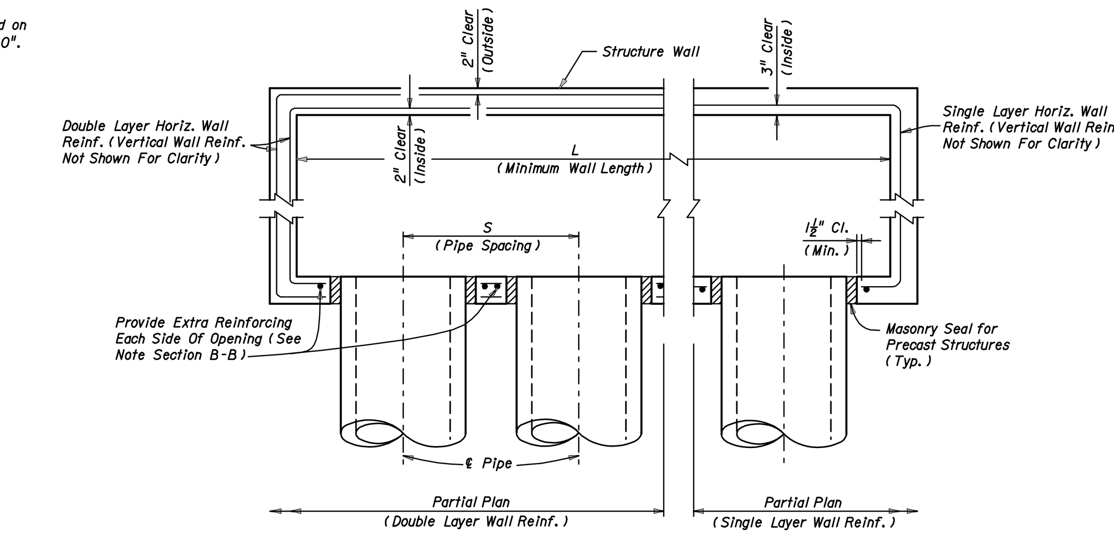

MULTIPLE PARALLEL PIPE CONNECTIONS DETAIL PLAN VIEW

STRUCTURE SIZES FOR PIPE CONNECTIONS

STRUCTURE BOTTOMS TYPE J AND P

Sheet No. 2 of 3

Index No. 200

DATE	DESCRIPTION	BY
06-19-14	REVISE TITLE BLOCK & OWNER INFO	SDM

REVISIONS

Engineering Business Certificate of Authorization No. 28782
Landscape Architecture Certificate of Authorization No. LC26000405

HEIDT DESIGN
5806-B Breckenridge Parkway
Tampa, Florida 33610
Office: 813-253-5311
Fax: 813-464-7629
www.HeidtDesign.com

DATE:

EDWIN J. ROGERS P.E. NO. 50082
FLORIDA PROFESSIONAL ENGINEER

DRAINAGE DETAILS

JOB NO. CNT-CT-025

DESIGN WERTZ

DRAWN MIDDLETON

DATE 5-14-2007

FILE DD2

CONNERTON
VILLAGE TWO
PARCEL 213

PREPARED FOR: HAYMAN WOODS, L.L.C.

Elevations based on National Geodetic Vertical Datum 1929 (NGVD 29)
Conversion from NGVD 29 to NAVD 88 = -0.85 Feet

SHEET 24 OF 35 SHEETS

R:\CONNERTON\HWL - CONNERTON\PARCEL 213\ENGINEERING\DD2.DWG-24 OF 35 2015/07/28 4:59 PM BRYANT BOYLES

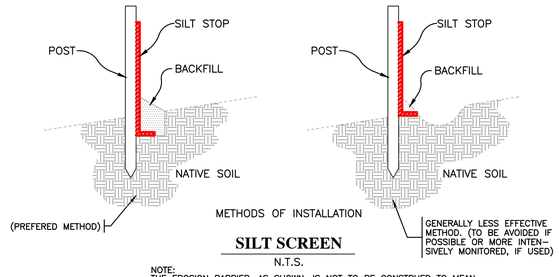

SILT SCREEN

N.T.S.

NOTE:
THE EROSION BARRIER, AS SHOWN, IS NOT TO BE CONSTRUED TO MEAN THAT IT IS ALL THAT MAY BE REQUIRED. THE CONTRACTOR IS TO TAKE WHATEVER MEASURES NECESSARY TO CONTROL EROSION THROUGHOUT THE PROJECT. EROSION CONTROL WILL BE INSTALLED PRIOR TO LAND CLEARING AND SHALL REMAIN IN PLACE UNTIL THE AREA IS STABILIZED. (SEE OTHER EROSION AND TURBIDITY NOTES ON THE GENERAL NOTES SHEET OF THIS PLAN.)

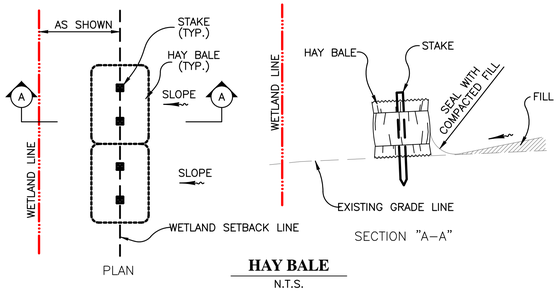

HAY BALE

N.T.S.

EROSION CONTROL DETAILS

EITHER METHOD OR A COMBINATION OF BOTH IS ACCEPTABLE

DIMENSIONS AND QUANTITIES

	D	X	A	B	C	E	F	G	H ☐	M Single Pipe	M Double Pipe	M Triple Pipe	M Quad. Pipe	N	5½" CONCRETE SLAB (CY) ◪ Single Pipe	5½" CONCRETE SLAB (CY) ◪ Double Pipe	5½" CONCRETE SLAB (CY) ◪ Triple Pipe	5½" CONCRETE SLAB (CY) ◪ Quad. Pipe	SODDING (SQ. YDS.) Single Pipe	SODDING (SQ. YDS.) Double Pipe	SODDING (SQ. YDS.) Triple Pipe	SODDING (SQ. YDS.) Quad. Pipe
1:2 Slope	15"	2'-7"	1.92'	2.18'	4.10'	2.00'	5'	1.22'	2.9'	4.63'	7.21'	9.79'	12.37'	1.09'	0.38	0.58	0.77	0.96	21	24	27	30
	18"	2'-10"	1.91'	2.74'	4.71'	2.66'	6'	1.41'	3.4'	4.92'	7.75'	10.58'	13.42'	1.21'	0.44	0.65	0.87	1.09	22	25	28	31
	24"	3'-5"	2.06'	3.85'	5.91'	3.56'	7'	1.71'	3.4'	5.50'	8.92'	12.33'	15.75'	1.25'	0.54	0.83	1.12	1.42	24	28	32	35
	30"	4'-3"	2.15'	4.95'	7.10'	4.56'	8'	2.00'	3.4'	6.08'	10.33'	14.58'	18.83'	1.29'	0.66	1.09	1.50	1.91	26	31	35	40
	36"	5'-1"	2.25'	6.08'	8.33'	5.56'	9'	2.24'	3.4'	6.67'	11.75'	16.83'	21.92'	1.33'	0.81	1.38	1.95	2.51	28	34	39	45
	42"	6'-0"	2.34'	7.21'	9.53'	6.56'	10'	2.45'	3.4'	7.25'	13.25'	19.25'	25.25'	1.38'	0.97	1.70	2.45	3.19	30	37	43	50
	48"	6'-9"	2.41'	8.33'	10.76'	7.56'	11'	2.65'	3.4'	7.83'	14.58'	21.33'	28.08'	1.42'	1.13	2.04	2.93	3.84	32	39	47	54
	54"	7'-6"	2.52'	9.44'	11.96'	8.56'	12'	2.83'	3.4'	8.42'	16.08'	23.75'	31.42'	1.46'	1.31	2.44	3.58	4.72	34	42	51	59
	60"	8'-6"	2.62'	10.56'	13.18'	9.56'	14'	3.00'	4.4'	9.00'	17.50'	26.00'	34.50'	1.50'	1.51	2.89	4.28	5.68	36	45	55	64
	66"	9'-5"	2.71'	11.68'	14.39'	10.56'	15'	3.18'	4.4'	9.58'	18.75'	27.92'	37.08'	1.54'	1.68	3.25	4.84	6.43	38	48	58	68
	72"	10'-0"	2.80'	12.80'	15.60'	11.56'	16'	3.30'	4.4'	10.16'	20.16'	30.16'	40.16'	1.58'	1.89	3.74	5.59	7.45	40	51	62	73
1:4 Slope	15"	2'-7"	2.27'	4.09'	6.36'	4.03'	8'	1.22'	4.0'	4.63'	7.21'	9.79'	12.37'	1.19'	0.57	0.87	1.15	1.44	23	26	29	32
	18"	2'-10"	2.36'	5.12'	7.48'	5.03'	9'	1.41'	4.0'	4.92'	7.75'	10.58'	13.42'	1.21'	0.66	0.99	1.31	1.65	25	28	31	35
	24"	3'-5"	2.53'	7.81' △	9.71'	7.03' △	11'	1.71'	4.0'	5.50'	8.92'	12.33'	15.75'	1.25'	0.85	1.30	1.75	2.20	28	32	36	40
	30"	4'-3"	2.70'	9.95'	11.95'	9.03'	13'	2.00'	4.0'	6.08'	10.33'	14.58'	18.83'	1.29'	1.10	1.74	2.39	3.05	31	36	41	46
	36"	5'-1"	2.87'	11.91' ◇	14.18'	11.03' ◇	15'	2.24'	4.0'	6.67'	11.75'	16.83'	21.92'	1.33'	1.30	2.21	3.08	3.96	34	40	46	52
	42"	6'-0"	3.05'	13.91'	16.49'	13.03'	17'	2.45'	4.0'	7.25'	13.25'	19.25'	25.25'	1.38'	1.58	2.76	3.9	5.09	36	44	51	58
	48"	6'-9"	3.22'	15.43'	18.65'	15.03'	19'	2.65'	4.0'	7.83'	14.58'	21.33'	28.08'	1.42'	1.85	3.30	4.73	6.17	41	48	56	63
	54"	7'-6"	3.39'	17.49'	20.88'	17.03'	20'	2.83'	4.0'	8.42'	16.08'	23.75'	31.42'	1.46'	2.14	3.95	5.77	7.58	44	52	61	69
	60"	8'-6"	3.56'	19.55'	23.11'	19.03'	23'	3.00'	4.0'	9.00'	17.50'	26.00'	34.50'	1.50'	2.45	4.66	6.87	9.07	47	56	66	75
	66"	9'-5"	3.73'	21.62'	25.35'	21.03'	25'	3.18'	4.0'	9.58'	18.75'	27.92'	37.08'	1.54'	2.88	5.54	8.18	10.84	49	59	69	80
	72"	10'-0"	3.9'	23.68'	27.59'	23.03'	27'	3.30'	4.0'	10.16'	20.16'	30.16'	40.16'	1.58'	3.54	6.81	9.87'	13.13	52	63	74	85

◪ See General Note No. 3.
See Sheet 5 Of 6 For 3" Slab Quantities

☐ Values shown for estimating pipe quantities and are for information only.

B E
△ 6.42' △ 6.25' Dimensions permitted to allow use of 8' standard pipe lengths.
◇ 10.40' ◇ 10.10' Dimensions permitted to allow use of 12' standard pipe lengths.
△◇ Concrete slab shall be deepened to form bridge across crown of pipe. See section below.

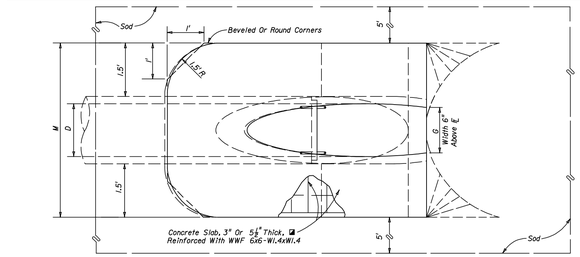

TOP VIEW - SINGLE PIPE

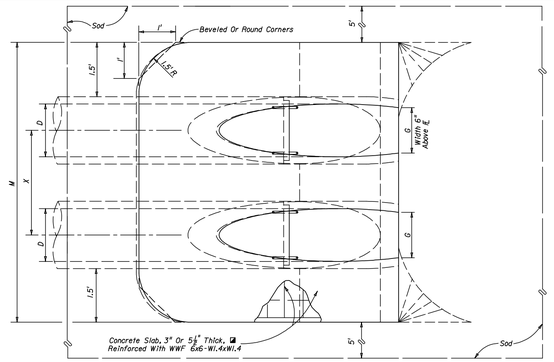

TOP VIEW - MULTIPLE PIPE

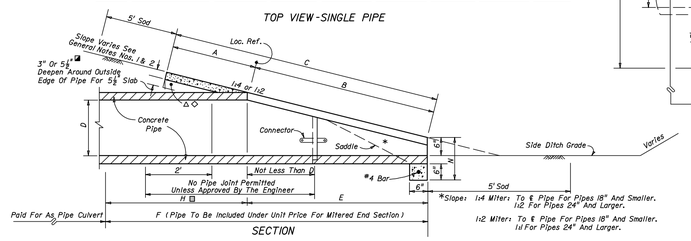

SECTION

NOTE: See sheet 6 for details and notes.

CROSS DRAIN MITERED END SECTION SINGLE AND MULTIPLE ROUND CONCRETE PIPE

Sheet No. 1 of 6
Index No. 272

R:\CONNERTON\WIL - CONNERTON\PARCEL 213\ENGINEERING\D03.DWG-25 OF 35 2015/07/28 4:59 PM BRYANT BOTELES

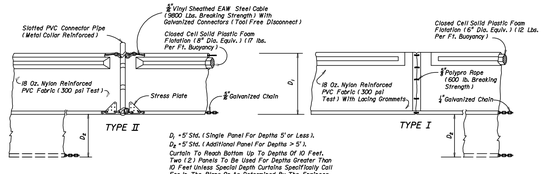

NOTICE: COMPONENTS OF TYPES I AND II MAY BE SIMILAR OR IDENTICAL TO PROPRIETARY DESIGNS. ANY INFRINGEMENT ON THE PROPRIETARY RIGHTS OF THE DESIGNER SHALL BE THE SOLE RESPONSIBILITY OF THE USER. SUBSTITUTIONS FOR TYPES I AND II SHALL BE AS APPROVED BY THE ENGINEER.

FLOATING TURBIDITY BARRIERS

NOTES:
1. Turbidity barriers are to be used in all permanent bodies of water regardless of water depth.
2. Number and spacing of anchors dependent on current velocities.
3. Deployment of barrier around pile locations may vary to accommodate construction operations.
4. Navigation may require segmenting barrier during construction operations.
5. For additional information see Section 104 of the Standard Specifications.

LEGEND
- Pile Locations
- Dredge Or Fill Area
- Mooring Buoy w/Anchor
- Anchor
- Barrier Movement Due To Current Action

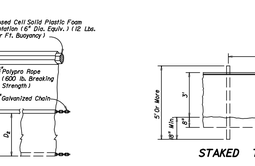

Note:
Turbidity barriers for flowing streams and tidal creeks may be either floating, or staked types or any combinations of types that will suit site conditions and meet erosion control and water quality requirements. The barrier type(s) will be at the Contractors option unless otherwise specified in the plans, however payment will be under the pay item(s) established in the plans for Floating Turbidity Barrier and/or Staked Turbidity Barrier. Posts in staked turbidity barriers to be installed in vertical position unless otherwise directed by the Engineer.

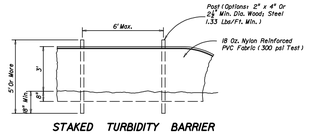

GENERAL NOTES
1. Floating turbidity barriers are to be paid for under the contract unit price for Floating Turbidity Barrier, LF.
2. Staked turbidity barriers are to be paid for under the contract unit price for Staked Turbidity Barrier, LF.

TURBIDITY BARRIER APPLICATIONS

TURBIDITY BARRIERS

Sheet No. 1 of 1
Index No. 103

DATE	DESCRIPTION	BY
06-19-14	REVISE TITLE BLOCK & OWNER INFO	SDM

REVISIONS

Engineering Business Certificate of Authorization No. 28782
Landscape Architecture Certificate of Authorization No. LC26000405

HEIDT DESIGN
5806-B Breckenridge Parkway
Tampa, Florida 33610
Office: 813-253-5311
Fax: 813-464-7629
www.HeidtDesign.com

DATE:
EDWIN J. ROGERS P.E. NO. 50082
FLORIDA PROFESSIONAL ENGINEER

DRAINAGE DETAILS

JOB NO. CNT-CT-025	CONNERTON VILLAGE TWO PARCEL 213
DESIGN WERTZ	
DRAWN MIDDLETON	PREPARED FOR: HAYMAN WOODS, L.L.C.
DATE 5-14-2007	Elevations based on National Geodetic Vertical Datum 1929 (NGVD 29) Conversion from NGVD 29 to NAVD 88 = -0.85 Feet
FILE DD3	SHEET 25 OF 35 SHEETS

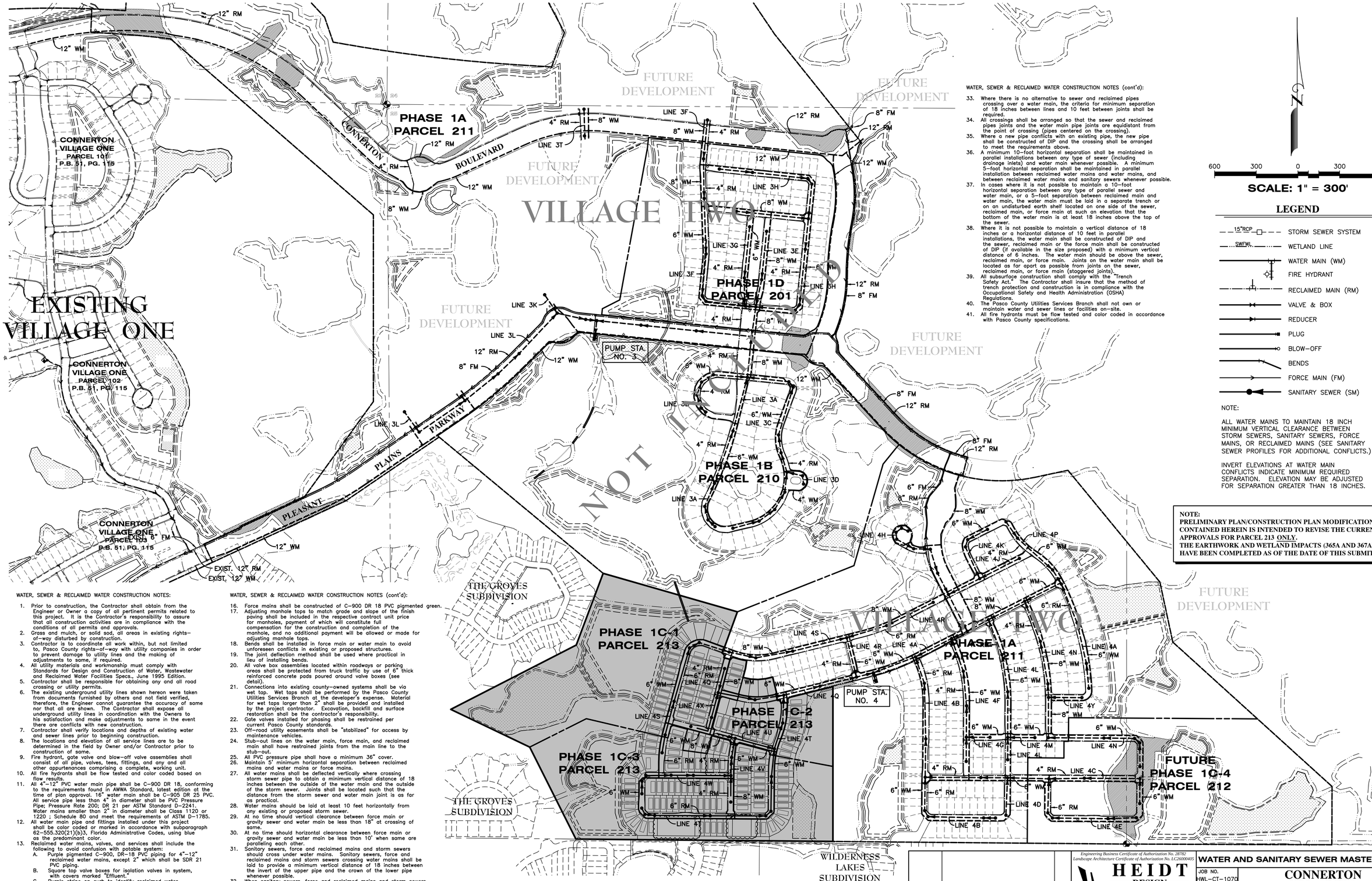

WATER, SEWER & RECLAIMED WATER CONSTRUCTION NOTES:

1. Prior to construction, the Contractor shall obtain from the Engineer or Owner a copy of all pertinent permits related to this project. It is the Contractor's responsibility to assure that all construction activities are in compliance with the conditions of all permits and approvals.
2. Grass and mulch, or solid sod, all areas in existing rights-of-way disturbed by construction.
3. Contractor is to coordinate all work within, but not limited to, Pasco County rights-of-way with utility companies in order to prevent damage to utility lines and the making of adjustments to same, if required.
4. All utility materials and workmanship must comply with Standards for Design and Construction of Water, Wastewater and Reclaimed Water Facilities Specs., June 1995 Edition.
5. Contractor shall be responsible for obtaining any and all road crossing or utility permits.
6. The existing underground utility lines shown hereon were taken from documents furnished by others and not field verified, therefore, the Engineer cannot guarantee the accuracy of same nor that all are shown. The Contractor shall expose all underground utility lines in coordination with the Owners to his satisfaction and make adjustments to same in the event there are conflicts with new construction.
7. Contractor shall verify locations and depths of existing water and sewer lines prior to beginning construction.
8. The locations and elevation of all service lines are to be determined in the field by Owner and/or Contractor prior to construction of same.
9. Fire hydrant, gate valve and blow-off valve assemblies shall consist of all pipe, valves, tees, fittings, and any and all other appurtenances comprising a complete, working unit.
10. All fire hydrants shall be flow tested and color coded based on flow results.
11. All 4"-12" PVC water main pipe shall be C-900 DR 18, conforming to the requirements found in AWWA Standard, latest edition at the time of plan approval. 16" water main shall be C-905 DR 25 PVC. All service pipe less than 4" in diameter shall be PVC Pressure Pipe; Pressure Rate 200; DR 21 per ASTM Standard D-2241. Water mains smaller than 2" in diameter shall be Class 1120 or 1220 ; Schedule 80 and meet the requirements of ASTM D-1785.
12. All water pipe and fittings installed under this project shall be color coded or marked in accordance with subparagraph 62-555.320(21)(b)3, Florida Administrative Codes, using blue as the predominant color.
13. Reclaimed water mains, valves, and services shall include the following to avoid confusion with potable system:
    A. Purple pigmented C-900, DR-18 PVC piping for 4"-12" reclaimed water mains, except 2" which shall be SDR 21 PVC piping.
    B. Square top valve boxes for isolation valves in system, with covers marked "Effluent."
    C. Purple stripe on curb to identify reclaimed water services.
    D. One inch services for reclaimed water services.
    E. Purple magnetic locating tape, stating "REUSE MAIN BURIED BELOW" over all reclaimed water mains (18 inches below grade).
    F. Reclaimed water service on opposite lot line from potable service.
    G. 16" reclaimed main shall be C-905 DR 25 PVC.
14. All aspects of reclaimed water system must comply with Chapter 17-610, F.A.C., latest edition.
15. All 8" sanitary sewer pipe shall be constructed at a 0.40% minimum slope unless otherwise noted.

WATER, SEWER & RECLAIMED WATER CONSTRUCTION NOTES (cont'd):

16. Force mains shall be constructed of C-900 DR 18 PVC pigmented green.
17. Adjusting manhole tops to match grade and slope of the finish paving shall be included in the respective contract unit price for manholes, payment of which will constitute full compensation for the construction and completion of the manhole, and no additional payment will be allowed or made for adjusting manhole tops.
18. Bends shall be installed in force main or water main to avoid unforeseen conflicts in existing or proposed structures.
19. The joint deflection method shall be used where practical in lieu of installing bends.
20. All valve box assemblies located within roadways or parking areas shall be protected from truck traffic by use of 6" thick reinforced concrete pads poured around valve boxes (see detail).
21. Connections into existing county-owned systems shall be via wet tap. Wet taps shall be performed by the Pasco County Utilities Services Branch at the developer's expense. Material for wet taps larger than 2" shall be provided and installed by the project contractor. Excavation, backfill and surface restoration shall be the contractor's responsibility.
22. Gate valves installed for phasing shall be restrained per current Pasco County standards.
23. Off-road utility easements shall be "stabilized" for access by maintenance vehicles.
24. Stub-out lines on the water main, force main, and reclaimed main shall have restrained joints from the main line to the stub-out.
25. All PVC pressure pipe shall have a minimum 36" cover.
26. Maintain 5' minimum horizontal separation between reclaimed mains and water mains or force mains.
27. All water mains shall be deflected vertically where crossing storm sewer pipe to obtain a minimum vertical distance of 18 inches between the outside of the water main and the outside of the storm sewer. Joints shall be located such that the distance from the storm sewer and water main joint is as far as practical.
28. Water mains should be laid at least 10 feet horizontally from any existing or proposed storm sewer.
29. At no time should vertical clearance between force main or gravity sewer and water main be less than 18" at crossing of same.
30. At no time should horizontal clearance between force main or gravity sewer and water main be less than 10' when same are paralleling each other.
31. Sanitary sewers, force and reclaimed mains and storm sewers should cross under water mains. Sanitary sewers, force and reclaimed mains and storm sewers crossing water mains shall be laid to provide a minimum vertical distance of 18 inches between the invert of the upper pipe and the crown of the lower pipe whenever possible.
32. When sanitary sewers, force and reclaimed mains and storm sewers must cross a water main with less than 18 inches vertical distance, both the sewer and the water main shall be constructed of ductile iron pipe (DIP) at the crossing. (DIP is not required for storm sewers if it is not available in the size proposed.) Sufficient lengths of DIP must be used to provide a minimum separation of 10 feet between any two joints. All joints on the water main within 20 feet of the crossing must be leak free and mechanically restrained. A minimum vertical clearance of 6 inches must be maintained at the crossing.

SEE ABOVE RIGHT FOR ADDITIONAL NOTES

WATER, SEWER & RECLAIMED WATER CONSTRUCTION NOTES (cont'd):

33. Where there is no alternative to sewer and reclaimed pipes crossing over a water main, the criteria for minimum separation of 18 inches between lines and 10 feet between joints shall be required.
34. All crossings shall be arranged so that the sewer and reclaimed pipes joints and the water main pipe joints are equidistant from the point of crossing (pipes centered on the crossing).
35. Where a new pipe conflicts with an existing pipe, the new pipe shall be constructed of DIP and the crossing shall be arranged to meet the requirements above.
36. A minimum 10-foot horizontal separation shall be maintained in parallel installations between any type of sewer (including drainage inlets) and water main whenever possible. A minimum 5-foot horizontal separation shall be maintained in parallel installation between reclaimed water mains and water mains, and between reclaimed water mains and sanitary sewers whenever possible.
37. In cases where it is not possible to maintain a 10-foot horizontal separation between any type of parallel sewer and water main, or a 5-foot separation between reclaimed main and water main, the water main must be laid in a separate trench or on an undisturbed earth shelf located on one side of the sewer, reclaimed main, or force main at such an elevation that the bottom of the water main is at least 18 inches above the top of the sewer.
38. Where it is not possible to maintain a vertical distance of 18 inches or a horizontal distance of 10 feet in parallel installations, the water main shall be constructed of DIP and the sewer, reclaimed main or the force main shall be constructed of DIP (if available in the size proposed) with a minimum vertical distance of 6 inches. The water main should be above the sewer, reclaimed main, or force main. Joints on the water main shall be located as far apart as possible from joints on the sewer, reclaimed main, or force main (staggered joints).
39. All subsurface construction shall comply with the "Trench Safety Act." The Contractor shall insure that the method of trench protection and construction is in compliance with the Occupational Safety and Health Administration (OSHA) Regulations.
40. The Pasco County Utilities Services Branch shall not own or maintain water and sewer lines or facilities on-site.
41. All fire hydrants must be flow tested and color coded in accordance with Pasco County specifications.

N

600 300 0 300 600

SCALE: 1" = 300'

LEGEND

- STORM SEWER SYSTEM (15"RCP)
- WETLAND LINE (SWFWL)
- WATER MAIN (WM)
- FIRE HYDRANT
- RECLAIMED MAIN (RM)
- VALVE & BOX
- REDUCER
- PLUG
- BLOW-OFF
- BENDS
- FORCE MAIN (FM)
- SANITARY SEWER (SM)

NOTE:

ALL WATER MAINS TO MAINTAIN 18 INCH MINIMUM VERTICAL CLEARANCE BETWEEN STORM SEWERS, SANITARY SEWERS, FORCE MAINS, OR RECLAIMED MAINS (SEE SANITARY SEWER PROFILES FOR ADDITIONAL CONFLICTS.)

INVERT ELEVATIONS AT WATER MAIN CONFLICTS INDICATE MINIMUM REQUIRED SEPARATION. ELEVATION MAY BE ADJUSTED FOR SEPARATION GREATER THAN 18 INCHES.

NOTE:
PRELIMINARY PLAN/CONSTRUCTION PLAN MODIFICATION CONTAINED HEREIN IS INTENDED TO REVISE THE CURRENT APPROVALS FOR PARCEL 213 ONLY. THE EARTHWORK AND WETLAND IMPACTS (365A AND 367A) HAVE BEEN COMPLETED AS OF THE DATE OF THIS SUBMITTAL.

SHT, NO.	DESCRIPTION
26	WATER, REUSE AND SAN. SEWER KEY MAP
27-28	WATER, REUSE AND SAN. SEWER PLANS
29-30	SANITARY SEWER PROFILES
31-33	WATER AND REUSE SYSTEM DETAILS
34-35	SANITARY SEWER SYSTEM DETAILS

DATE	DESCRIPTION	BY
07-28-15	REVISE PH 1C-3 LAYOUT, BLK 17,18,20	BAB
06-19-14	REVISE TITLE BLOCK & OWNER INFO	SDM

REVISIONS

Engineering Business Certificate of Authorization No. 28782
Landscape Architecture Certificate of Authorization No. LC26000405
HEIDT DESIGN
5806-B Breckenridge Parkway
Tampa, Florida 33610
Office: 813-253-5311
Fax: 813-464-7629
www.HeidtDesign.com

DATE: 5-14-2007

EDWIN J. ROGERS P.E. NO. 50082
FLORIDA PROFESSIONAL ENGINEER

WATER AND SANITARY SEWER MASTER PLAN

CONNERTON VILLAGE TWO PARCEL 213

PREPARED FOR: **HAYMAN WOODS, L.L.C.**

JOB NO. HWL-CT-1070
DESIGN MIDDLETON
DRAWN MIDDLETON
DATE 5-14-2007
FILE WSKEY

Elevations based on National Geodetic Vertical Datum 1929 (NGVD 29)
Conversion from NGVD 29 to NAVD 88 = -0.85 Feet

SHEET 26 OF 35 SHEETS

R:\CONNERTON\WRL - CONNERTON\PARCEL 213\ENGINEERING\WSKEY\DWG-26 OF 35 2015/07/28 4:59 PM BRYANT BOYLES

LEGEND

- STORM SEWER SYSTEM
- WETLAND LINE
- WATER MAIN (WM)
- FIRE HYDRANT
- DOUBLE SERVICE (WM)
- SINGLE SERVICE (WM)
- SERVICE SLEEVE (WM)
- RECLAIMED MAIN (RM)
- DOUBLE SERVICE (RM)
- SINGLE SERVICE (RM)
- SERVICE SLEEVE (RM)
- VALVE & BOX
- REDUCER
- PLUG
- BLOW-OFF
- BENDS
- FORCE MAIN (FM)
- SANITARY SEWER (SM)
- SINGLE SERVICE (SM)
- DOUBLE SERVICE (SM)

WDSP WATER DISTRIBUTION SAMPLING POINT

NOTE:

ALL WATER MAINS TO MAINTAIN 18 INCH MINIMUM VERTICAL CLEARANCE BETWEEN STORM SEWERS, SANITARY SEWERS, FORCE MAINS, OR RECLAIMED MAINS (SEE SANITARY SEWER PROFILES FOR ADDITIONAL CONFLICTS.)

INVERT ELEVATIONS AT WATER MAIN CONFLICTS INDICATE MINIMUM REQUIRED SEPARATION. ELEVATION MAY BE ADJUSTED FOR SEPARATION GREATER THAN 18 INCHES.

SANITARY SEWER MANHOLES CONSTRUCTED IN UNPAVED AREAS SHALL BE STABILIZED WITH 6" THICK COMPACTED LIMEROCK (LBR 100) FOR A TEN FOOT RADIUS.

N

100 50 0 50 100

SCALE: 1" = 50'

EXISTING VILLAGE TWO PHASE 1B PARCEL 210

VILLAGE TWO PHASE 1C-1 PARCEL 213

EXISTING VILLAGE TWO PHASE 1A PARCEL 211

VILLAGE TWO PHASE 1C-2 PARCEL 213

EXISTING PUMP STATION NO. 4

MH 4S4 WAS CONSTRUCTED AS PART OF PHASE 1A

MH 4Q4 WAS CONSTRUCTED AS PART OF PHASE 1A

MH 4T1 WAS CONSTRUCTED AS PART OF PHASE 1A

INSTALL: (WM) 4-6" 22½° BENDS

762 LF± 6" PVC WM

INSTALL: (RM) 4-6" 22½° BENDS

REMOVE 6" PLUG CONNECT TO EXISTING 6" RECLAIM MAIN

REMOVE 4" PLUG CONNECT TO EXISTING 4" RECLAIM MAIN

TEMPORARY SERVICE JUMPER (SEE DETAIL SHEET 32)

REMOVE 6" PLUG CONNECT TO EXISTING 6" WATER MAIN (CHLORINE INJECTION POINT)

EXISTING FIRE HYDRANT

#37 WDSP

REMOVE 8" PLUG CONNECT TO EXISTING 8" WATER MAIN

188 LF± 8" PVC WM

228 LF± 8" PVC WM

CONST. 6" WM (INV. 77.1) OVER 48" RCP (INV. 71.0)

CONST. 6" RM (INV. 77.0) OVER 29"x45" RCP (INV. 73.8)

768 LF± 6" PVC RM

CONST. 4" RM (INV. 77.7) OVER 29"x45" RCP (INV. 74.2)

272 LF± 4" PVC RM

INSTALL: (WM) 1-8"x 6" TEE 1-6" GATE VALVE

INSTALL: (WM) 1-2" BLOWOFF (PHASE 1C-1)

CONST. 8" WM (INV. 78.0) OVER 30" RCP (INV. 74.3)

INSTALL: (RM) 1-4"x 4" TEE 2-4" GATE VALVES

252 LF± 4" PVC RM

375 LF± 6" PVC WM

#32 WDSP

58 LF± 8" PVC WM

INSTALL: (WM) 1-FH ASSEMBLY

274 LF± 8" PVC WM

INSTALL: (RM) 1-2" BLOWOFF (PHASE 1C-1)

459 LF± 4" PVC RM

REMOVE 4" PLUG CONNECT TO EXISTING 4" RECLAIM MAIN

REMOVE 6" PLUG CONNECT TO EXISTING 6" RECLAIM MAIN

TEMPORARY SERVICE JUMPER (SEE DETAIL SHEET 32)

EXISTING 6" WATER MAIN

EXISTING 8" SANITARY

EXISTING 6" RECLAIM MAIN

REMOVE 6" PLUG CONNECT TO EXISTING 6" WATER MAIN (CHLORINE INJECTION POINT)

EXISTING FIRE HYDRANT

EXISTING 8" WATER MAIN

EXISTING 8" SANITARY

EXISTING 6" RECLAIM MAIN

CUT-IN SANITARY SERVICE

ABANDON EXISTING SANITARY SERVICE

366 LF± 6" PVC WM

CUT-IN SANITARY SERVICE

320 LF± 6" PVC RM

CONST. 6" RM (INV. 76.6) OVER 24" RCP (INV. 73.7)

305 LF± 4" PVC RM

INSTALL: (RM) 1-6"x 4" TEE 1-6" GATE VALVE 1-4" GATE VALVE

INSTALL: (WM) 1-6" PLUG 1-2" BLOWOFF (PHASE 1C-1)

INSTALL: (RM) 1-2" BLOWOFF (PHASE 1C-1)

CONST. 6" WM (INV. 76.9) OVER 30" RCP (INV. 71.7)

CONST. 4" RM (INV. 77.0) OVER 36 RCP (INV. 72.2

84 LF± 6" PVC WM

INSTALL: (WM) 1-FH ASSEMBLY 1-6"x 6" TEE 2-6" GATE VALVES

INSTALL: (RM) 1-6"x 4" TEE 1-6" GATE VALVE 1-4" GATE VALVE 4-6" 45° BENDS

CONST. 6" RM (INV. 77.5) OVER 30" RCP (INV. 71.8)

#35 WDSP

INSTALL: (RM) 1-4"x 4" TEE 2-4" GATE VALVES

242 LF± 4" PVC RM

CONST. 8" WM (INV. 78.5) OVER 36" RCP (INV. 72.2) & OVER 4" RM (INV. 77.0)

INSTALL: (RM) 1-2" BLOWOFF (PHASE 1C-1)

INSTALL: (RM) 1-4"x 4" TEE 2-4" GATE VALVES

TEMPORARY SERVICE JUMPER (SEE DETAIL SHEET 32)

MH 4T1 WAS CONSTRUCTED AS PART OF PHASE 1A

NOTE:
SANITARY SERVICES WERE CONSTRUCTED FOR LOTS 66 THRU 68 DURING PHASE 1A, PARCEL 211 CONSTRUCTION. THESE SERVICES SHALL BE REMOVED OR PLUGGED AS REQUIRED AND REPLACED WITH NEW SERVICES AS SHOWN. EXISTING RECLAIM AND SANITARY SERVICES TO LOT 69 TO REMAIN.

LOCATION MAP

SEE SHEET 28A FOR ADDITIONAL INFORMATION

SEE SHEET 28 FOR CONTINUATION

DATE	DESCRIPTION	BY
07-28-15	REVISE PH 1C-3 LAYOUT	BAB
12-24-14	FDEP REVIEW COMMENTS-27,28,32	NYB
06-19-14	REVISE TITLE BLOCK & OWNER INFO	SDM
06-19-14	REVISE TITLE BLOCK & OWNER INFO	SDM
10-01-07	LOTS 13/14, BLK.17 PER PASCO DRC	RRR
07-26-07	REMOVE CROSSING ON SOUTHERN CHARM DR.	RRR

REVISIONS

Engineering Business Certificate of Authorization No. 28782
Landscape Architecture Certificate of Authorization No. LC26000405

HEIDT DESIGN

5806-B Breckenridge Parkway
Tampa, Florida 33610
Office: 813-253-5311
Fax: 813-464-7629
www.HeidtDesign.com

DATE:

EDWIN J. ROGERS P.E. NO. 50082
FLORIDA PROFESSIONAL ENGINEER

WATER, REUSE & SANITARY SEWER PLAN

JOB NO. HWL-CT-1070
DESIGN MIDDLETON
DRAWN MIDDLETON
DATE 5-14-2007
FILE WS1

CONNERTON VILLAGE TWO PARCEL 213

PREPARED FOR: HAYMAN WOODS, L.L.C.

Elevations based on National Geodetic Vertical Datum 1929 (NGVD 29)
Conversion from NGVD 29 to NAVD 88 = -0.85 Feet

SHEET 27 OF 35 SHEETS

R:\CONNERTON\HWL - CONNERTON\PARCEL 213\ENGINEERING\WS1.DWG-27 OF 35 2015/07/28 4:59 PM BRYANT BOYLES

SEE SHEET 27 FOR CONTINUATION

SEE SHEET 28A FOR ADDITIONAL INFORMATION

SEE SHEET 28A FOR ADDITIONAL INFORMATION

SEE SHEET 28A FOR ADDITIONAL INFORMATION

SOUTHERN CHARM DR

FAIRE FROST LANE

STARRY EYES WAY

WISTFUL YEARN DRIVE

SEAGARDEN LANE

BILLOWAVE VILLAGE TWO PHASE 1C-2 PARCEL 213

LINE 4S

LINE 4X

LINE 4U

LINE 4V

LINE 4T

LINE 4W

LINE 4T

PHASE 1C-1

PHASE 1C-2

PHASE 1C-3

4S6 4S7 4S8

4X1 4X2

4U1 4U2

4V1 4V2 4V3

4T1 4T2 4T3 4T4 4T5 4T6 4T7 4T8 4T9

4W1 4W2 4W3 4W4 4W5

CONST. 6" WM (INV. 77.0) OVER 42" RCP (INV. 70.1)

CONST. 6" WM (INV. 75.8) OVER 36" RCP (INV. 72.3) & OVER 6" RM (INV. 74.3)

INSTALL: (WM) 1-6" PLUG 1-2" BLOWOFF (PHASE 1C-1)

INSTALL: (RM) 1-6" PLUG 1-2" BLOWOFF (PHASE 1C-1)

330 LF± 6" PVC WM

INSTALL: (WM) 1-8"x 8" TEE 1-8" GATE VALVE 1-8"x 6" REDUCER 1-2" BLOWOFF (PHASE 1C-1)

396 LF± 6" PVC RM

207 LF± 8" PVC WM

INSTALL: (WM) 2-8" 45° BENDS

INSTALL: (RM) 1-2" BLOWOFF (PHASE 1C-2)

MH 4T1 WAS CONSTRUCTED AS PART OF PHASE 1A

INSTALL: (WM) 1-FH ASSEMBLY

INSTALL: (RM) 1-4" PLUG 1-2" BLOWOFF (PHASE 1C-1)

133 LF± 6" PVC WM

168 LF± 6" PVC WM

INSTALL: (WM) 1-6"x 6" TEE 2-6" GATE VALVES

#33 WDSP

INSTALL: (WM) 1-8" x 8" TEE 1-8" GATE VALVE 1-8"x 6" REDUCER 1-8" 45° BEND 1-6" 45° BEND 1-6" GATE VALVE 1-8" PLUG 1-2" BLOWOFF (PHASE 1C-2)

INSTALL: (RM) 1-2" BLOWOFF (PHASE 1C-2)

CONST. 6" WM (INV. 77.5) OVER 6" RM (INV. 76.0)

403 LF± 6" PVC WM

INSTALL: (RM) 1-6"x 6" TEE 1-6" GATE VALVE 1-6"x 4" REDUCER 1-4" GATE VALVE

CONST. 4" RM (INV. 77.5) OVER 24" RCP (INV. 73.1)

463 LF± 4" PVC RM

INSTALL: (RM) 1-4"x 4" TEE 2-4" GATE VALVES

282 LF± 4" PVC RM

251 LF± 8" PVC WM

778 LF± 6" PVC RM

317 LF± 6" PVC WM

INSTALL: (WM) 1-2" BLOWOFF (PHASE 1C-2)

INSTALL: (RM) 2-6" 45° BENDS

INSTALL: (WM) 2-6" 45° BENDS

INSTALL: (WM) 1-8"x 6" TEE 1-8" GATE VALVE 1-6" GATE VALVE 1-FH ASSEMBLY

CONST. 6" WM (INV. 77.4) OVER 4" RM (INV. 76.1)

539 LF± 6" PVC WM

71 LF± 6" PVC WM

742 LF± 6" PVC WM

INSTALL: (WM) 1-6"x 6" TEE 2-6" GATE VALVES 1-FH ASSEMBLY

299 LF± 4" PVC RM

INSTALL: (WM) 1-FH ASSEMBLY

CONST. 6" RM (INV. 77.5) OVER 24" RCP (INV. 74.6)

294 LF± 8" PVC WM

CONST. 6" WM (INV. 76.8) OVER 48" RCP (INV. 66.4)

INSTALL: (RM) 2-6" 45° BENDS

CONST. 6" RM (INV. 77.0) OVER 42" RCP (INV. 72.8)

1001 LF± 6" PVC RM

CONST. 6" RM (INV. 77.9) OVER 42" RCP (INV. 73.0)

INSTALL: (RM) 1-6"x 4" TEE 1-4" GATE VALVE 1-6" GATE VALVES 2-4" 45° BENDS

CONST. 6" RM (INV. 77.4) OVER 24" RCP (INV. 73.9)

420 LF± 6" PVC WM

INSTALL: (WM) 2-8" 45° BENDS

CONST. 8" WM (INV. 77.1) OVER 30" RCP (INV. 73.7)

INSTALL: (WM) 2-6" 45° BENDS

INSTALL: (WM) 1-8"x 6" TEE 1-8" GATE VALVE 1-6" GATE VALVES 1-FH ASSEMBLY

INSTALL: (WM) 1-6" 45° BEND 2-6" 22½° BENDS

INSTALL: (WM) 1-FH ASSEMBLY

263 LF± 6" PVC WM

CONST. 6" RM (INV. 77.0) OVER 18" RCP (INV. 75.6)

INSTALL: (WM) 1-8"x 8" TEE 2-8"x 6" REDUCERS 2-6" GATE VALVES

INSTALL: (WM) 1-2" BLOWOFF (PHASE 1C-2)

INSTALL: (WM) 2-6" 45° BENDS

POCKET PARK

POCKET PARK

20' DRAINAGE EASEMENT 42" RCP

20' DRAINAGE EASEMENT 48" RCP

SWFWL

25' OS

10' UTIL. ESMT.

30" RCP

36" RCP

24" RCP

42" RCP

48" RCP

M '9.3 '7.7 '7.3

100 50 0 50 100

SCALE: 1" = 50'

LEGEND

- STORM SEWER SYSTEM
- WETLAND LINE
- WATER MAIN (WM)
- FIRE HYDRANT
- DOUBLE SERVICE (WM)
- SINGLE SERVICE (WM)
- SERVICE SLEEVE (WM)
- RECLAIMED MAIN (RM)
- DOUBLE SERVICE (RM)
- SINGLE SERVICE (RM)
- SERVICE SLEEVE (RM)
- VALVE & BOX
- REDUCER
- PLUG
- BLOW-OFF
- BENDS
- FORCE MAIN (FM)
- SANITARY SEWER (SM)
- SINGLE SERVICE (SM)
- DOUBLE SERVICE (SM)
- WDSP WATER DISTRIBUTION SAMPLING POINT

NOTE:

ALL WATER MAINS TO MAINTAIN 18 INCH MINIMUM VERTICAL CLEARANCE BETWEEN STORM SEWERS, SANITARY SEWERS, FORCE MAINS, OR RECLAIMED MAINS (SEE SANITARY SEWER PROFILES FOR ADDITIONAL CONFLICTS.)

INVERT ELEVATIONS AT WATER MAIN CONFLICTS INDICATE MINIMUM REQUIRED SEPARATION. ELEVATION MAY BE ADJUSTED FOR SEPARATION GREATER THAN 18 INCHES.

SANITARY SEWER MANHOLES CONSTRUCTED IN UNPAVED AREAS SHALL BE STABILIZED WITH 6" THICK COMPACTED LIMEROCK (LBR 100) FOR A TEN FOOT RADIUS.

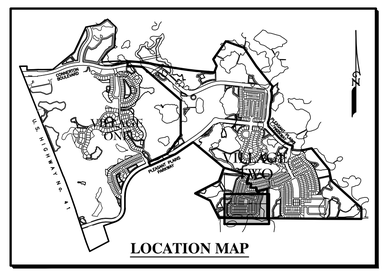

LOCATION MAP

DATE	DESCRIPTION	BY
02-10-15	REV. PH 1C-3 LAYOUT-BLK 17, 18, 20	BAB
02-10-15	SERV TO LOTS 17, 18 & 19, BLK 18	MED
12-24-14	FDEP REVIEW COMMENTS-27,28,32	NYB
06-19-14	REVISE TITLE BLOCK & OWNER INFO	SDM
10-01-07	LOTS 13/14, BLK.17 PER PASCO DRC	RRR
08-16-07	RELOCATE STR. NO. 357	JMH

REVISIONS

Engineering Business Certificate of Authorization No. 28782
Landscape Architecture Certificate of Authorization No. LC26000405

HEIDT DESIGN
5806-B Breckenridge Parkway
Tampa, Florida 33610
Office: 813-253-5311
Fax: 813-464-7629
www.HeidtDesign.com

DATE:

EDWIN J. ROGERS P.E. NO. 50082
FLORIDA PROFESSIONAL ENGINEER

WATER, REUSE & SANITARY SEWER PLAN

JOB NO.	HWL-CT-1070
DESIGN	MIDDLETON
DRAWN	MIDDLETON
DATE	5-14-2007
FILE	WS2

CONNERTON VILLAGE TWO PARCEL 213

PREPARED FOR: HAYMAN WOODS, L.L.C.

Elevations based on National Geodetic Vertical Datum 1929 (NGVD 29)
Conversion from NGVD 29 to NAVD 88 = -0.85 Feet

SHEET 28 OF 35 SHEETS

R:\CONNERTON\WHL - CONNERTON\PARCEL 213\ENGINEERING\WS2.DWG-28 OF 35 2015/07/28 4:59 PM BRYANT BOYLES

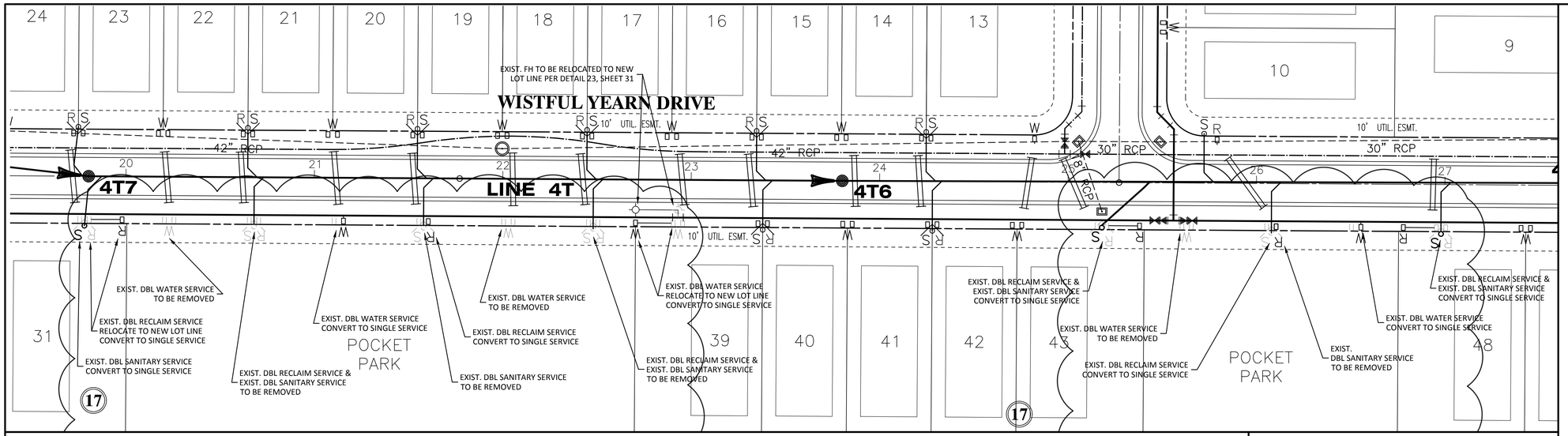

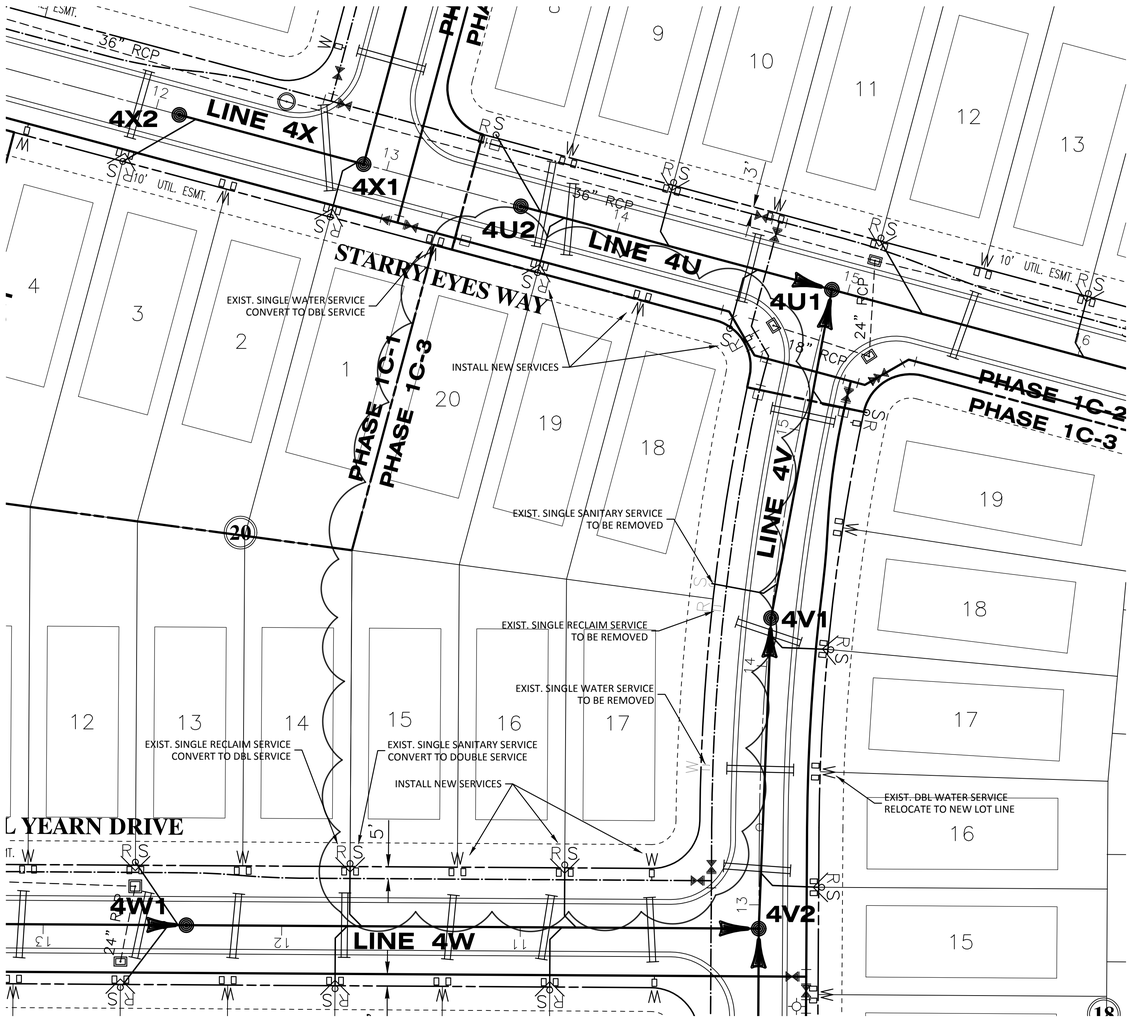

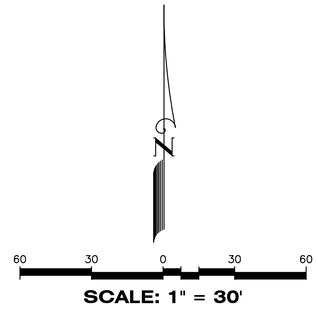

LEGEND

- STORM SEWER SYSTEM (15"RCP)
- WETLAND LINE (SWFWL)
- WATER MAIN (WM)
- FIRE HYDRANT
- DOUBLE SERVICE (WM)
- SINGLE SERVICE (WM)
- SERVICE SLEEVE (WM)
- RECLAIMED MAIN (RM)
- DOUBLE SERVICE (RM)
- SINGLE SERVICE (RM)
- SERVICE SLEEVE (RM)
- VALVE & BOX
- REDUCER
- PLUG
- BLOW-OFF
- BENDS
- FORCE MAIN (FM)
- SANITARY SEWER (SM) (2A2)
- SINGLE SERVICE (SM)
- DOUBLE SERVICE (SM)
- WATER DISTRIBUTION SAMPLING POINT (WDSP)

NOTE:

ALL WATER MAINS TO MAINTAIN 18 INCH MINIMUM VERTICAL CLEARANCE BETWEEN STORM SEWERS, SANITARY SEWERS, FORCE MAINS, OR RECLAIMED MAINS (SEE SANITARY SEWER PROFILES FOR ADDITIONAL CONFLICTS.)

INVERT ELEVATIONS AT WATER MAIN CONFLICTS INDICATE MINIMUM REQUIRED SEPARATION. ELEVATION MAY BE ADJUSTED FOR SEPARATION GREATER THAN 18 INCHES.

SANITARY SEWER MANHOLES CONSTRUCTED IN UNPAVED AREAS SHALL BE STABILIZED WITH 6" THICK COMPACTED LIMEROCK (LBR 100) FOR A TEN FOOT RADIUS.

WATER & SEWER SERVICE RECONSTRUCTION NOTES

1. CONTRACTOR TO COMPLETE ALL SERVICES AND APPURTENANCES AS SHOWN ON PLAN.
2. ALL WATER, RECLAIMED WATER, AND SANITARY SEWER SERVICE LOCATIONS ARE SHOWN GRAPHICALLY FOR PLANNING PURPOSES ONLY. FOR ACTUAL SERVICE CONSTRUCTION LOCATIONS FOR WATER AND RECLAIMED WATER, SEE DETAILS 16, 17, 18, 19, & 20, SHEET 32. FOR SANITARY SEWER LATERALS SEE SERVICE DETAILS 41, 42, & 43, SHEET 34.
3. CONTRACTOR SHALL REMOVE EXISTING SERVICE MARKINGS ON CURB AND RE-PAINT PER NEW SERVICE LOCATIONS.

SEE SHEET 33
FOR WATER SERVICE
RECONSTRUCTION DETAILS

SEE SHEET 35
FOR SEWER SERVICE
RECONSTRUCTION DETAILS

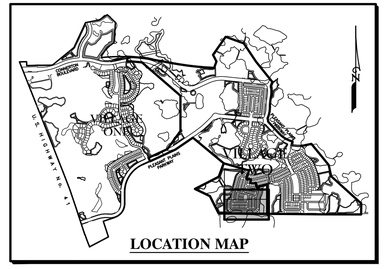

DATE	DESCRIPTION	BY
07-28-15	ADD SHEET-ABANDON/RELOCATE SERVICES	BAB

REVISIONS

Engineering Business Certificate of Authorization No. 28782
Landscape Architecture Certificate of Authorization No. LC26000405
HEIDT DESIGN
5806-B Breckenridge Parkway
Tampa, Florida 33610
Office: 813-253-5311
Fax: 813-464-7629
www.HeidtDesign.com

DATE:

EDWIN J. ROGERS P.E. NO. 50082
FLORIDA PROFESSIONAL ENGINEER

WATER, REUSE & SANITARY SEWER PLAN

JOB NO.	HWL-CT-1070
DESIGN	MIDDLETON
DRAWN	MIDDLETON
DATE	5-14-2007
FILE	WS2

CONNERTON VILLAGE TWO PARCEL 213

PREPARED FOR: HAYMAN WOODS, L.L.C.

Elevations based on National Geodetic Vertical Datum 1929 (NGVD 29)
Conversion from NGVD 29 to NAVD 88 = -0.85 Feet

R:\CONNERTON\HWL - CONNERTON\PARCEL 213\ENGINEERING\WS2.DWG-28A OF 35 2015/07/28 4:59 PM BRYANT BOYLES

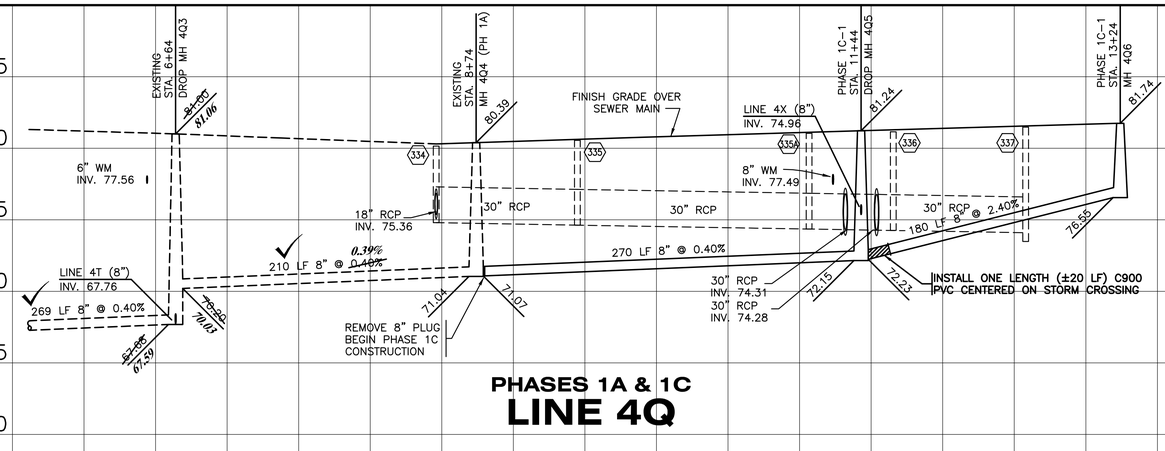

PHASES 1A & 1C
LINE 4Q

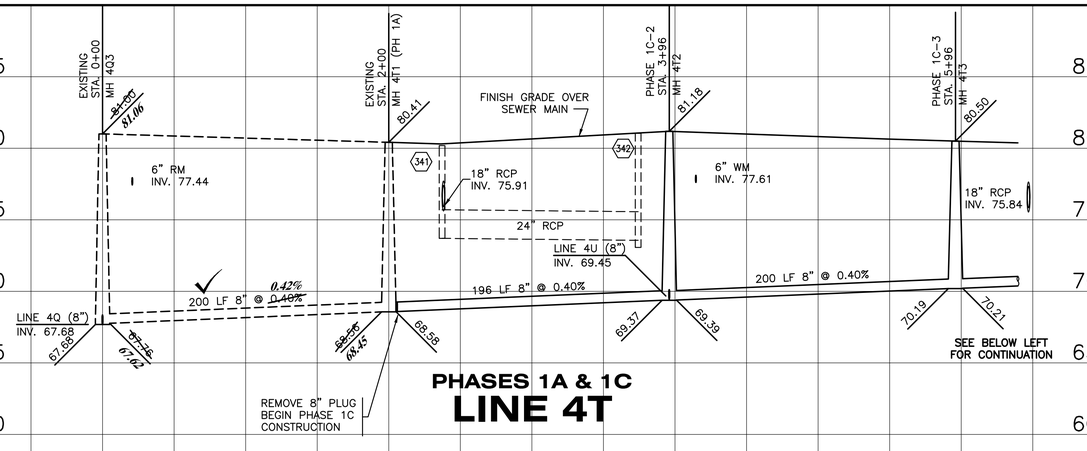

PHASES 1A & 1C
LINE 4T

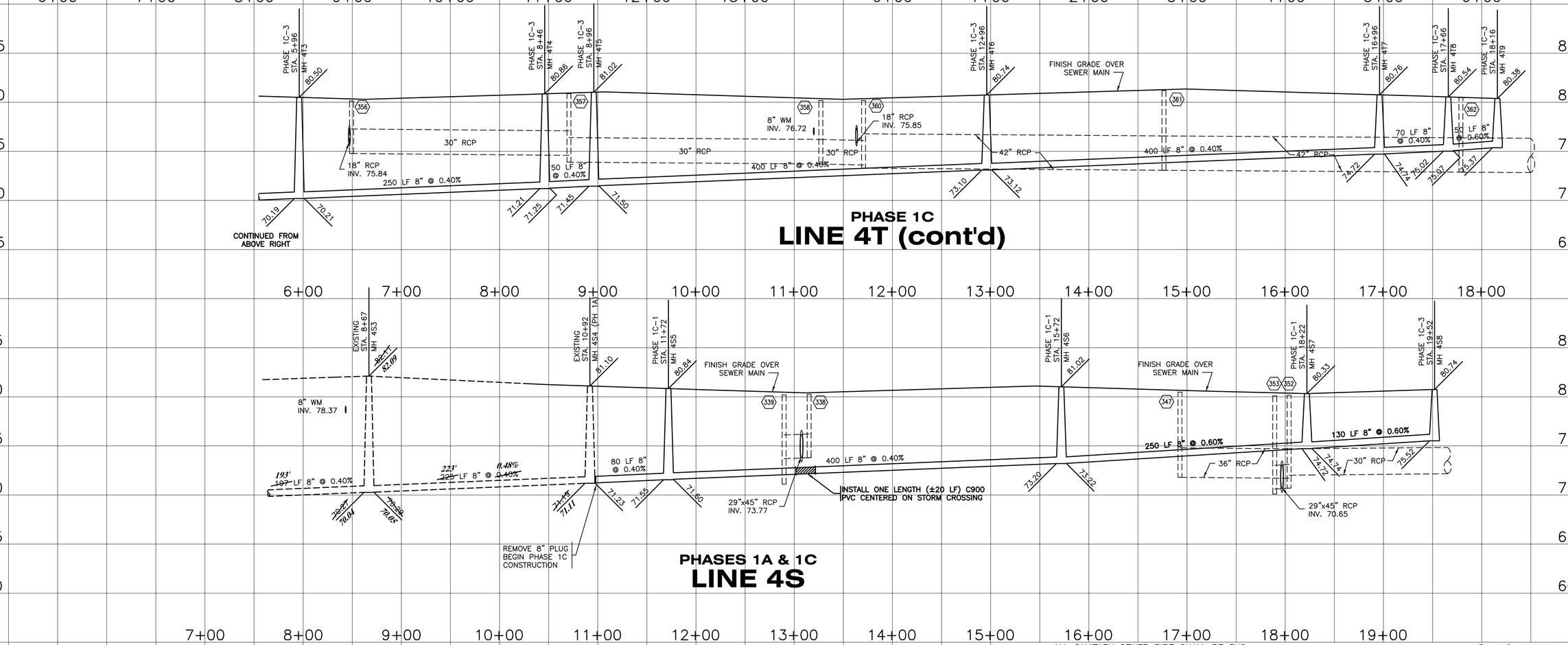

PHASE 1C
LINE 4T (cont'd)

PHASES 1A & 1C
LINE 4S

NOTE: ALL SANITARY SEWER PIPE SHALL BE PVC UNLESS OTHERWISE NOTED.

SCALE: 1"= 5' VERTICAL
1"= 50' HORIZONTAL

DATE	DESCRIPTION	BY
06-19-14	REVISE TITLE BLOCK & OWNER INFO	SDM

REVISIONS

Engineering Business Certificate of Authorization No. 28782
Landscape Architecture Certificate of Authorization No. LC26000405
HEIDT DESIGN
5806-B Breckenridge Parkway
Tampa, Florida 33610
Office: 813-253-5311
Fax: 813-864-7629
www.HeidtDesign.com
DATE:
EDWIN J. ROGERS P.E. NO. 50082
FLORIDA PROFESSIONAL ENGINEER

SANITARY SEWER PROFILES

JOB NO. CNT-CT-025	CONNERTON VILLAGE TWO PARCEL 213
DESIGN MIDDLETON	
DRAWN MIDDLETON	PREPARED FOR: HAYMAN WOODS, L.L.C.
DATE 5-14-2007	Elevations based on National Geodetic Vertical Datum 1929 (NGVD 29) Conversion from NGVD 29 to NAVD 88 = -0.85 Feet
FILE SP1	SHEET 29 OF 35 SHEETS

R:\CONNERTON\WWL - CONNERTON\PARCEL 213\ENGINEERING\SP1.DWG-29 OF 35 2015/07/28 4:59 PM BRYANT BOYLES

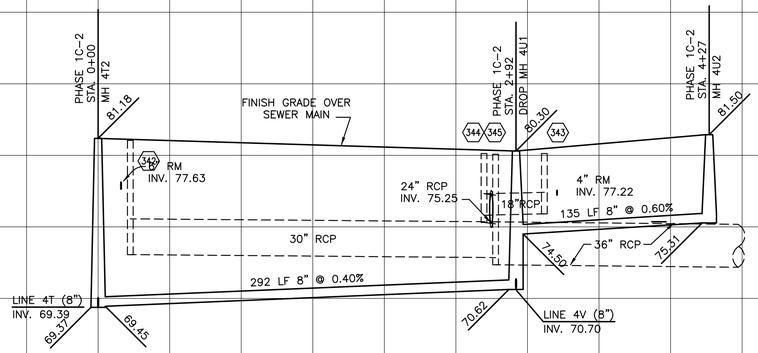

PHASE 1C
LINE 4U

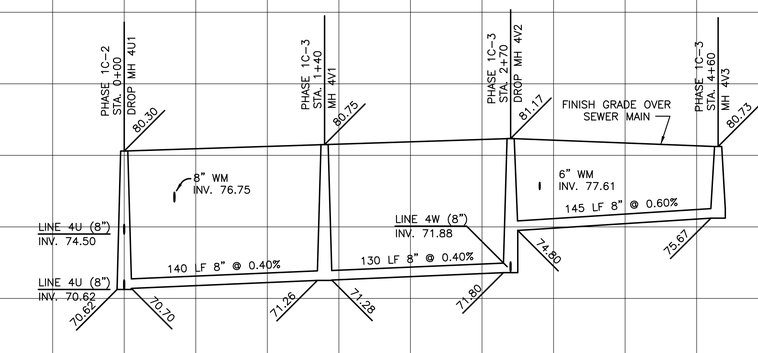

PHASE 1C
LINE 4V

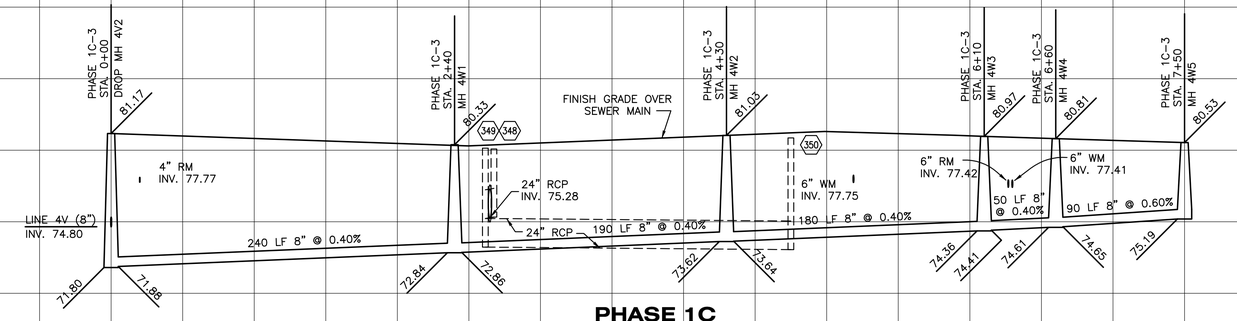

PHASE 1C
LINE 4W

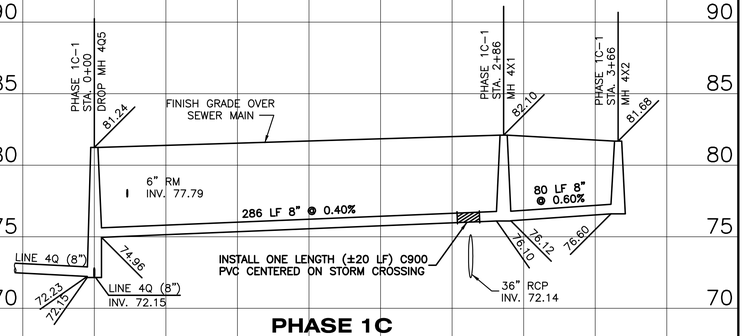

PHASE 1C
LINE 4X

NOTE: ALL SANITARY SEWER PIPE SHALL BE PVC UNLESS OTHERWISE NOTED.

SCALE: 1"= 5' VERTICAL
1"= 50' HORIZONTAL

DATE	DESCRIPTION	BY
06-19-14	REVISE TITLE BLOCK & OWNER INFO	SDM

REVISIONS

Engineering Business Certificate of Authorization No. 28782
Landscape Architecture Certificate of Authorization No. LC26000405

HEIDT DESIGN
5806-B Breckenridge Parkway
Tampa, Florida 33610
Office: 813-253-5311
Fax: 813-464-7629
www.HeidtDesign.com

DATE:
EDWIN J. ROGERS P.E. NO. 50082
FLORIDA PROFESSIONAL ENGINEER

SANITARY SEWER PROFILES

JOB NO. CNT-CT-025	CONNERTON VILLAGE TWO PARCEL 213
DESIGN MIDDLETON	
DRAWN MIDDLETON	PREPARED FOR: HAYMAN WOODS, L.L.C.
DATE 5-14-2007	Elevations based on National Geodetic Vertical Datum 1929 (NGVD 29) Conversion from NGVD 29 to NAVD 88 = -0.85 Feet
FILE SP2	SHEET 30 OF 35 SHEETS

R:\CONNERTON\WWL - CONNERTON\PARCEL 213\ENGINEERING\SP2.DWG-30 OF 35 2015/07/28 5:00 PM BRYANT BOYLES

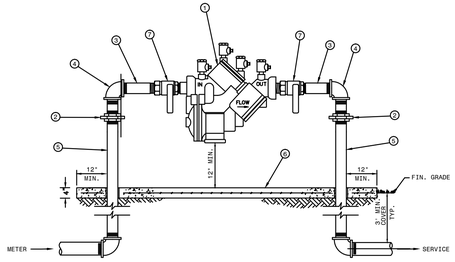

MATERIALS		
ITEM	QUANT.	DESCRIPTION
1	1	BACKFLOW PREVENTER ASSEMBLY, REDUCED PRESSURE ZONE
2	2	UNIONS - GALV.
3	2	NIPPLES - BRASS
4	2	ELBOWS - GALV. 90°
5	2	RISER - GALV.
6	*	CONCRETE SLAB
7	2	BALL VALVES - BRASS OR S.S. (PROVIDED WITH BFP ASS'Y)

NOTE:
- FIELD ADJUST AND CUT ITEM 5 TO THE PROPER LENGTH.
- MINIMUM CLEARANCE OF 24" TO BE MAINTAINED AROUND DEVICE FOR TESTING.
- ENTIRE ASSEMBLY TO BE PAINTED SAFETY BLUE.
- CONCRETE SLAB TO EXTEND 12" MIN. AROUND ENTIRE DEVICE.
- DEVICE MUST BE LISTED WITH THE UNIVERSITY OF SOUTHERN CALIFORNIA FOUNDATION FOR CROSS CONNECTION CONTROL AND HYDRAULIC RESEARCH.

CREATED 02/24/03	REDUCED PRESSURE BACKFLOW PREVENTER (SINGLE SERVICE: 3/4", 1", 1-1/2", 2")	PROVIDED FOR INFORMATIONAL PURPOSES ONLY. NO MODIFICATIONS WITHOUT WRITTEN PCU APPROVAL
REVISED	PASCO COUNTY UTILITIES	DETAIL 11

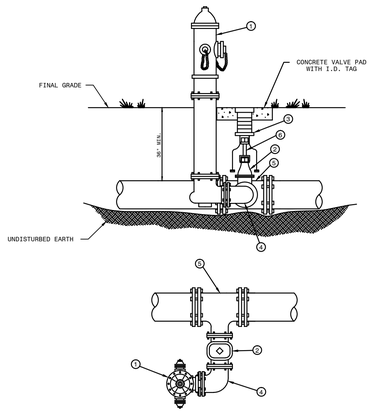

MATERIALS		
ITEM	QUANT.	DESCRIPTION
1	1	HYDRANT, FIRE (5 1/4" VALVE MIN.), PAINTED YELLOW
2	1	6" VALVE, GATE, MJ RESILIENT WEDGE
3	1	BOX, VALVE SLIP TYPE
4	1	6" BEND, ANCHORING, D.I.
5	1	TEE, ANCHORING, MJ
6	•	VALVE EXTENSION ROD, AS NECESSARY (3' MAX. BELOW GRADE)

CREATED 02/24/03	FIRE HYDRANT PARALLEL TO THE MAIN	PROVIDED FOR INFORMATIONAL PURPOSES ONLY. NO MODIFICATIONS WITHOUT WRITTEN PCU APPROVAL
REVISED	PASCO COUNTY UTILITIES	DETAIL 22

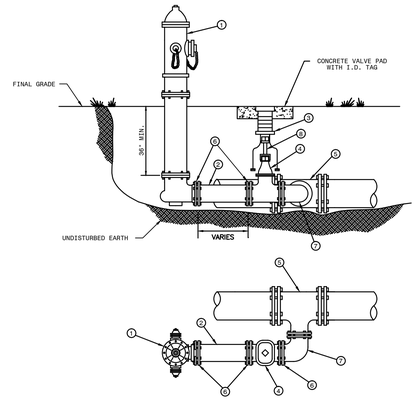

MATERIALS		
ITEM	QUANT.	DESCRIPTION
1	1	HYDRANT, FIRE (5 1/4" VALVE MIN.), PAINTED YELLOW
2	•	6" PIPE, P.V.C. (DR-18)
3	1	BOX, VALVE SLIP TYPE
4	1	6" VALVE, GATE, M.J. RESILIENT WEDGE
5	1	TEE, ANCHORING, M.J.
6	•	6" RESTRAINER GLAND (MEGALUG)
7	1	BEND, ANCHORING, D.I.
8	•	VALVE EXTENSION ROD, AS NECESSARY (3' MAX. BELOW GRADE)

CREATED 02/24/03	FIRE HYDRANT PARALLEL TO THE MAIN	PROVIDED FOR INFORMATIONAL PURPOSES ONLY. NO MODIFICATIONS WITHOUT WRITTEN PCU APPROVAL
REVISED	PASCO COUNTY UTILITIES	DETAIL 23

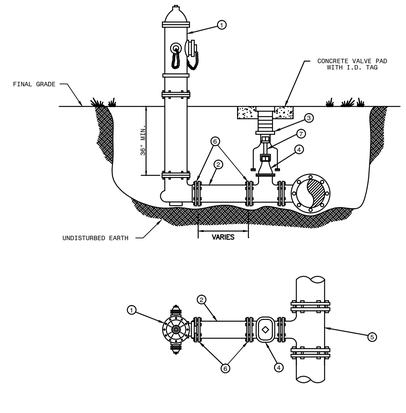

MATERIALS		
ITEM	QUANT.	DESCRIPTION
1	1	HYDRANT, FIRE (5 1/4" VALVE MIN.), PAINTED YELLOW
2	•	6" PIPE, P.V.C. (DR-18)
3	1	BOX, VALVE SLIP TYPE
4	1	6" VALVE, GATE, M.J. RESILIENT WEDGE
5	1	TEE, ANCHORING, M.J.
6	•	6" RESTRAINER GLAND (MEGALUG)
7	•	VALVE EXTENSION ROD, AS NECESSARY (3' MAX. BELOW GRADE)

CREATED 02/24/03	FIRE HYDRANT PERPENDICULAR TO THE MAIN	PROVIDED FOR INFORMATIONAL PURPOSES ONLY. NO MODIFICATIONS WITHOUT WRITTEN PCU APPROVAL
REVISED	PASCO COUNTY UTILITIES	DETAIL 24

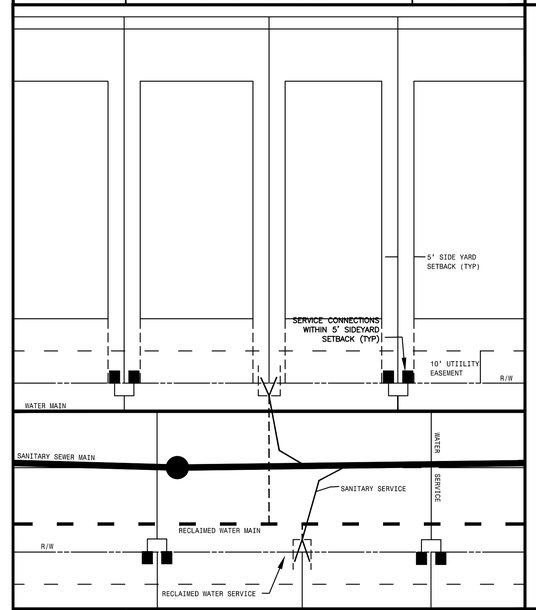

CREATED 02/24/03	STANDARD 40' (DETACHED) SINGLE FAMILY TYPICAL UTILITY CONNECTION DETAIL	PROVIDED FOR INFORMATIONAL PURPOSES ONLY. NO MODIFICATIONS WITHOUT WRITTEN PCU APPROVAL
REVISED	PASCO COUNTY UTILITIES	DETAIL 21

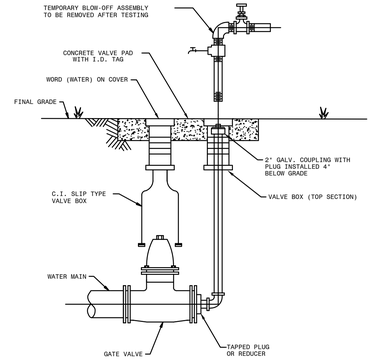

NOTES:
- MECHANICAL JOINTS/UNDERGROUND PIPING SHALL BE RESTRAINED AS SPECIFIED IN JOINT RESTRAINT TABLE (DETAIL 46)
- VALVE EXTENSION ROD SHALL BE UTILIZED, AS NECESSARY, SO THAT VALVE OPERATING NUT IS A MAXIMUM OF 3' BELOW GRADE.

CREATED 02/24/03	PERMANENT BLOW-OFF DETAIL	PROVIDED FOR INFORMATIONAL PURPOSES ONLY. NO MODIFICATIONS WITHOUT WRITTEN PCU APPROVAL
REVISED	PASCO COUNTY UTILITIES	DETAIL 25

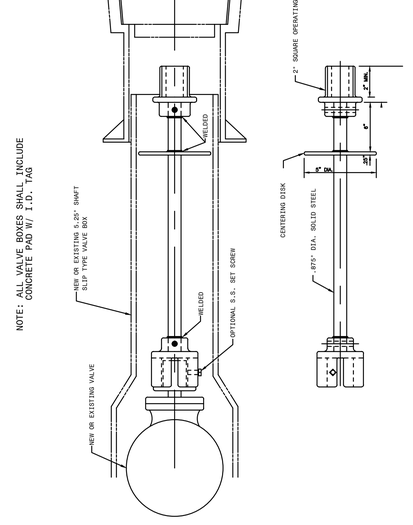

CREATED 02/24/03	VALVE EXTENSION RODS	PROVIDED FOR INFORMATIONAL PURPOSES ONLY. NO MODIFICATIONS WITHOUT WRITTEN PCU APPROVAL
REVISED	PASCO COUNTY UTILITIES	DETAIL 26

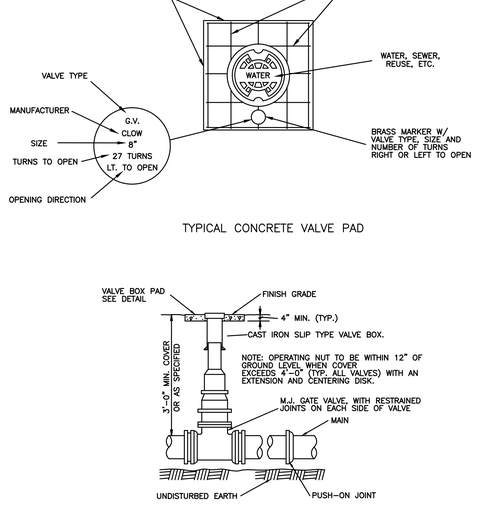

TYPICAL CONCRETE VALVE PAD

CREATED 02/24/03	VALVE BOX DETAIL SLIP TYPE	PROVIDED FOR INFORMATIONAL PURPOSES ONLY. NO MODIFICATIONS WITHOUT WRITTEN PCU APPROVAL
REVISED	PASCO COUNTY UTILITIES	DETAIL 27

DATE	DESCRIPTION	BY
06-19-14	REVISE TITLE BLOCK & OWNER INFO	SDM

REVISIONS

Engineering Business Certificate of Authorization No. 28782
Landscape Architecture Certificate of Authorization No. LC26000405

HEIDT DESIGN

5806-B Breckenridge Parkway
Tampa, Florida 33610
Office: 813-253-5311
Fax: 813-464-7629
www.HeidtDesign.com

DATE:

EDWIN J. ROGERS P.E. NO. 50082
FLORIDA PROFESSIONAL ENGINEER

WATER AND REUSE SYSTEM DETAILS

JOB NO. CNT-CT-025	**CONNERTON VILLAGE TWO PARCEL 213**
DESIGN MIDDLETON	
DRAWN MIDDLETON	PREPARED FOR: **HAYMAN WOODS, L.L.C.**
DATE 5-14-2007	**Elevations based on National Geodetic Vertical Datum 1929 (NGVD 29)** Conversion from NGVD 29 to NAVD 88 = -0.85 Feet
FILE WD1	**SHEET 31 OF 35 SHEETS**

R:\CONNERTON\WWL - CONNERTON\PARCEL 213\ENGINEERING\WD1.DWG-31 OF 35 2015/07/28 5:00 PM BRYANT BOYLES

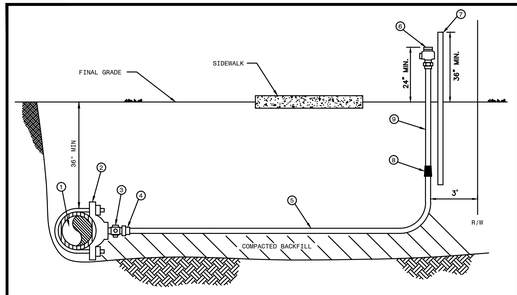

MATERIALS		
ITEM	QUANT.	DESCRIPTION
1	*	PIPE, PVC (DR-18) OR D.I.P.
2	1	SADDLE, SERVICE W/ 1" F.I.P. THREAD
3	1	1" CORPORATION (M.I.P. x COMP.)
4	1	1" INSERT (STAINLESS STEEL)
5	*	1" TUBING, POLYETHYLENE
6	1	3/4" WATER OR 1" REUSE CURB STOP BALL VALVE W/ LOCK WINGS (F.I.P. x COMP.)
7	1	2" x 4" P.T. MARKER STAKE
8	1	1" x 3/4" COUPLING (COMP. x COMP.) WATER ONLY
9	1	3/4" WATER OR 1" REUSE TUBING, POLYETHYLENE 4'

NOTES: - ALL FITTINGS FOR POLYETHYLENE TUBING ARE BRASS COMPRESSION TYPE.
- A VALVE BOX MAY BE REQUIRED AS SPECIFIED BY THE ENGINEER.
- CURB STOP TO TERMINATE 24" ABOVE GROUND AT R/W LINE.
- REUSE CURB STOPS = 1" / WATER CURB STOPS = 3/4"
- TUBING TO BE YARDLEY 3406 OR EQUAL.
- SADDLES 2" - 3" TO BE BRASS FULL CIRCLE TYPE.
- SADDLES 4" AND LARGER TO BE D.I. DUAL STRAP TYPE.
- CURB STOPS TO BE TIED TO MARKER STAKE.
- SADDLE MAY BE INSTALLED AT ANGLE (WITHIN 45° OF HORIZONTAL).
- MARKER STAKES PAINTED SAFETY BLUE FOR WATER, PURPLE FOR REUSE.

CREATED 02/24/03 REVISED	SINGLE NEAR SIDE WATER SERVICE - 3/4" SINGLE NEAR SIDE REUSE SERVICE - 1" POLYETHYLENE TUBING	PROVIDED FOR INFORMATIONAL PURPOSES ONLY. NO MODIFICATIONS WITHOUT WRITTEN PCU APPROVAL	
	PASCO COUNTY UTILITIES	DETAIL 16	

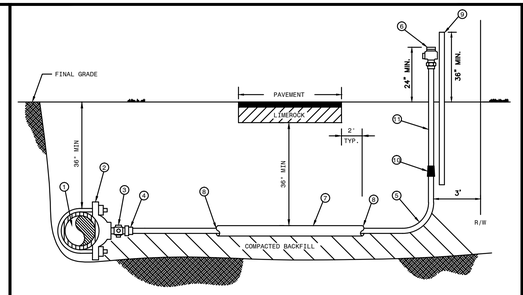

MATERIALS		
ITEM	QUANT.	DESCRIPTION
1	*	PIPE, PVC (DR-18) OR D.I.P.
2	1	SADDLE, SERVICE W/ 1" F.I.P. THREAD
3	1	1" CORPORATION (M.I.P. x COMP.)
4	1	1" INSERT (STAINLESS STEEL)
5	*	1" TUBING, POLYETHYLENE
6	1	3/4" WATER OR 1" REUSE CURB STOP BALL VALVE W/ LOCK WINGS (F.I.P. x COMP.)
7	*	2" CASING, PVC OR HDPE - 2' BEYOND EDGE PAVEMENT
8	*	SEALER, RAM-NEK
9	1	2" x 4" P.T. MARKER STAKE
10	1	1" x 3/4" COUPLING (COMP. x COMP.) WATER ONLY
11	1	3/4" WATER OR 1" REUSE TUBING, POLYETHYLENE 4'

NOTES: - ALL FITTINGS FOR POLYETHYLENE TUBING ARE BRASS COMPRESSION TYPE.
- A VALVE BOX MAY BE REQUIRED AS SPECIFIED BY THE ENGINEER.
- CURB STOP TO TERMINATE 24" ABOVE GROUND AT R/W LINE.
- REUSE CURB STOPS = 1" / WATER CURB STOPS = 3/4"
- TUBING TO BE YARDLEY 3406 OR EQUAL.
- SADDLES 2" - 3" TO BE BRASS FULL CIRCLE TYPE.
- SADDLES 4" AND LARGER TO BE D.I. DUAL STRAP TYPE.
- CURB STOPS TO BE TIED TO MARKER STAKE.
- SADDLE MAY BE INSTALLED AT ANGLE (WITHIN 45° OF HORIZONTAL).
- MARKER STAKES PAINTED SAFETY BLUE FOR WATER, PURPLE FOR REUSE.

CREATED 02/24/03 REVISED	SINGLE FAR SIDE WATER SERVICE - 3/4" SINGLE FAR SIDE REUSE SERVICE - 1" POLYETHYLENE TUBING	PROVIDED FOR INFORMATIONAL PURPOSES ONLY. NO MODIFICATIONS WITHOUT WRITTEN PCU APPROVAL	
	PASCO COUNTY UTILITIES	DETAIL 17	

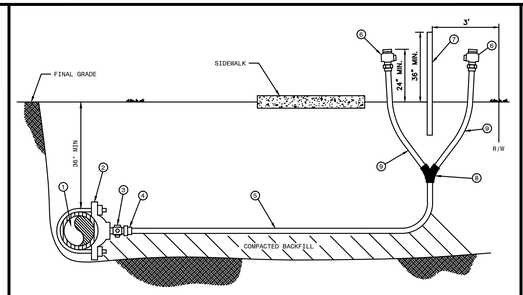

MATERIALS		
ITEM	QUANT.	DESCRIPTION
1	*	PIPE, PVC (DR-18) OR D.I.P.
2	1	SADDLE, SERVICE W/ 1" F.I.P. THREAD
3	1	1" CORPORATION (M.I.P. x COMP.)
4	1	1" INSERT (STAINLESS STEEL)
5	*	1" TUBING, POLYETHYLENE
6	1	3/4" WATER OR 1" REUSE CURB STOP BALL VALVE W/ LOCK WINGS (F.I.P. x COMP.)
7	1	2" x 4" P.T. MARKER STAKE
8	1	1" x 3/4" WYE BRANCH (COMP. x COMP.) WATER ONLY
		1" x 1" WYE BRANCH (COMP. x COMP.) REUSE ONLY
9	1	3/4" WATER OR 1" REUSE TUBING, POLYETHYLENE 4'

NOTES: - ALL FITTINGS FOR POLYETHYLENE TUBING ARE BRASS COMPRESSION TYPE.
- A VALVE BOX MAY BE REQUIRED AS SPECIFIED BY THE ENGINEER.
- CURB STOP TO TERMINATE 24" ABOVE GROUND AT R/W LINE.
- REUSE CURB STOPS = 1" / WATER CURB STOPS = 3/4"
- TUBING TO BE YARDLEY 3406 OR EQUAL.
- SADDLES 2" - 3" TO BE BRASS FULL CIRCLE TYPE.
- SADDLES 4" AND LARGER TO BE D.I. DUAL STRAP TYPE.
- CURB STOPS TO BE TIED TO MARKER STAKE.
- SADDLE MAY BE INSTALLED AT ANGLE (WITHIN 45° OF HORIZONTAL).
- MARKER STAKES PAINTED SAFETY BLUE FOR WATER, PURPLE FOR REUSE.

CREATED 02/24/03 REVISED	DOUBLE NEAR SIDE WATER SERVICE - 3/4" DOUBLE NEAR SIDE REUSE SERVICE - 1" POLYETHYLENE TUBING	PROVIDED FOR INFORMATIONAL PURPOSES ONLY. NO MODIFICATIONS WITHOUT WRITTEN PCU APPROVAL	
	PASCO COUNTY UTILITIES	DETAIL 18	

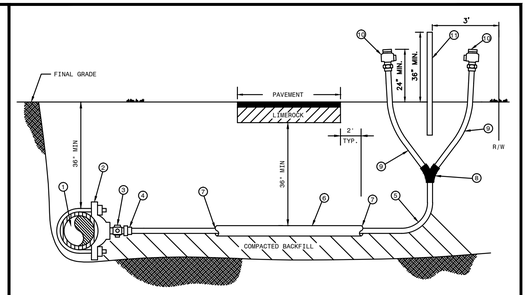

MATERIALS		
ITEM	QUANT.	DESCRIPTION
1	*	PIPE, PVC (DR-18) OR D.I.P.
2	1	SADDLE, SERVICE W/ 1" F.I.P. THREAD
3	1	1" CORPORATION (M.I.P. x COMP.)
4	1	1" INSERT (STAINLESS STEEL)
5	*	1" TUBING, POLYETHYLENE
6	*	2" CASING, PVC OR HDPE - 2' BEYOND EDGE PAVEMENT
7	*	SEALER, RAM-NEK
8	1	WYE BRANCH FOR POLY TUBING
9	2	3/4" WATER OR 1" REUSE TUBING, POLYETHYLENE 4'
10	2	3/4" WATER OR 1" REUSE CURB STOP BALL VALVE W/ LOCK WINGS (F.I.P. x COMP.)
11	1	2" x 4" P.T. MARKER STAKE

NOTES: - ALL FITTINGS FOR POLYETHYLENE TUBING ARE BRASS COMPRESSION TYPE.
- A VALVE BOX MAY BE REQUIRED AS SPECIFIED BY THE ENGINEER.
- CURB STOP TO TERMINATE 24" ABOVE GROUND AT R/W LINE.
- REUSE CURB STOPS = 1" / WATER CURB STOPS = 3/4"
- TUBING TO BE YARDLEY 3406 OR EQUAL.
- SADDLES 2" - 3" TO BE BRASS FULL CIRCLE TYPE.
- SADDLES 4" AND LARGER TO BE D.I. DUAL STRAP TYPE.
- CURB STOPS TO BE TIED TO MARKER STAKE.
- SADDLE MAY BE INSTALLED AT ANGLE (WITHIN 45° OF HORIZONTAL).
- MARKER STAKES PAINTED SAFETY BLUE FOR WATER, PURPLE FOR REUSE.

CREATED 02/24/03 REVISED	WATER AND REUSE LATERAL SERVICE 3/4" (DOUBLE - FAR SIDE) POLYETHYLENE TUBING	PROVIDED FOR INFORMATIONAL PURPOSES ONLY. NO MODIFICATIONS WITHOUT WRITTEN PCU APPROVAL	
	PASCO COUNTY UTILITIES	DETAIL 19	

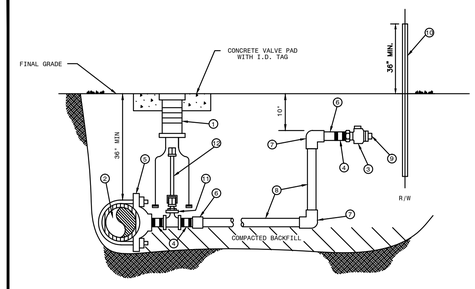

MATERIALS		
ITEM	QUANT.	DESCRIPTION
1	1	BOX, VALVE CAST IRON SLIP TYPE
2	*	4" & LARGER PIPE, PVC (DR-18) OR D.I.P. (CLASS 50)
3	2	1 1/2", 2" CURB STOP BALL VALVE W/ LOCK WINGS (FIP x FIP OR FIP x CTS)
4	3	1 1/2", 2" NIPPLE, BRASS OR STAINLESS STEEL
5	1	1 1/2", 2" SADDLE, SERVICE (I.P. THREADS)
6	2	1 1/2", 2" ADAPTER (PVC SCH 40 / SLIP x FPT OR BRASS MIP x CTS)
7	2	1 1/2", 2" 90° ELBOW (SLIP x SLIP) SCH 40 (NOT REQUIRED FOR HDPE)
8	*	1 1/2", 2" PIPE, PVC (SCH 40) OR HDPE (3408) - LENGTH VARIES
9	1	1 1/2", 2" PLUG, THREADED (W/ TEFLON TAPE)
10	1	2" x 4" P.T. MARKER STAKE
11	1	2" GATE VALVE, IRON BODY W/ SQUARE NUT
12	1	VALVE EXTENSION ROD, AS REQUIRED (3' MAX. BELOW GRADE)

NOTE: - A VALVE BOX SHALL BE REQUIRED ON ALL GATE VALVES.
- SERVICE SADDLES SHALL BE INSTALLED ON ALL TAPS TO P.V.C. (DR-18) WATER MAINS.
- 2" GATE VALVE TO BE RESILIENT WEDGE IRON BODY TYPE WITH 2" OPERATING UNIT.
- SADDLES 4" AND LARGER TO BE DUCTILE IRON DUAL STRAP TYPE.
- 1 1/2" BRASS REDUCER BUSHING REQUIRED WITH ITEM NO. 11 FOR 1 1/2" SERVICE.
- MARKER STAKES PAINTED SAFETY BLUE FOR WATER, PURPLE FOR REUSE.
- 4" DIAMETER CASING REQUIRED FOR ROAD CROSSINGS

CREATED 02/24/03 REVISED	WATER AND REUSE LATERAL SERVICE 1 1/2" OR 2" SERVICE LATERAL PVC (SCHEDULE 40)	PROVIDED FOR INFORMATIONAL PURPOSES ONLY. NO MODIFICATIONS WITHOUT WRITTEN PCU APPROVAL	
	PASCO COUNTY UTILITIES	DETAIL 20	

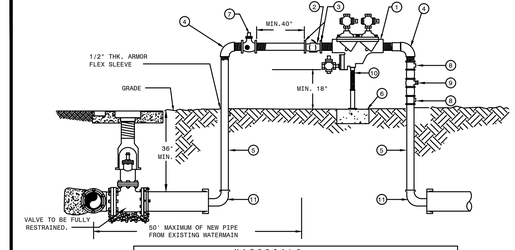

MATERIALS		
ITEM	QUANT.	DESCRIPTION
1	1	2" BACKFLOW PREVENTER ASSEMBLY, REDUCED PRESSURE ZONE
2	1	2" METER FURNISHED BY PASCO COUNTY UTILITIES
3	2	BRASS-METER FLANGES OR ADAPTORS
4	2	2" ELBOWS - GALV. 90°
5	2	2" RISER - GALV.
6	*	CONCRETE SLAB
7	1	2" VALVE - BRASS OR S.S.
8	2	TEE/ VALVES - BRASS OR S.S.
9	1	2" GATE VALVE - BRASS OR S.S.
10	1	PIPE STAND (SUPPORT)
11	2	M.J. CAP WITH 2" TAP

NOTE: - CONTRACTOR/CUSTOMER SHALL APPLY AT PASCO COUNTY UTILITIES CUSTOMER SERVICE FOR TEMPORARY WATER SERVICE AT LEAST THREE DAYS PRIOR TO REQUIRED SERVICE DATE.
- THE METER WILL BE FURNISHED, INSTALLED AND INITIAL READING TAKEN BY PASCO COUNTY UTILITIES. ALL FITTINGS, PIPING, VALVES AND MATERIALS INCLUDING THE PASCO COUNTY APPROVED REDUCED PRESSURE BACKFLOW PREVENTION DEVICE SHALL BE FURNISHED AND INSTALLED BY THE CONTRACTOR/CUSTOMER.
- CONTRACTOR/CUSTOMER FURNISHED REDUCED PRESSURE BACKFLOW PREVENTION DEVICE MUST BE INSTALLED BEFORE THE METER IS INSTALLED BY PASCO COUNTY UTILITIES. THE APPROVED BACKFLOW PREVENTION DEVICE SHALL BE TESTED AND CERTIFIED BY PASCO COUNTY UTILITIES CERTIFIED BACKFLOW PREVENTION TECHNICIAN AT TIME OF METER INSTALLATION.
- CONTRACTOR/CUSTOMER SHALL PROTECT THE JUMPER/METER ASSEMBLY FROM DAMAGE.
- CONTRACTOR/CUSTOMER IS RESPONSIBLE FOR BACTERIOLOGICAL TESTING AFTER CONNECTION OF TEMPORARY WATER SERVICE.
- TEMPORARY CONSTRUCTION JUMPER/METER ASSEMBLY SHALL NOT BE REMOVED UNTIL SYSTEM IS ACCEPTED AND DEPARTMENT OF HEALTH CERTIFICATION AND CLEARANCE FOR SERVICE FORM HAS BEEN RECEIVED BY PASCO COUNTY UTILITIES.
- WHEN THE NEW SYSTEM IS ACCEPTED AND THE FINAL METER READING TAKEN BY PASCO COUNTY, THE TEMPORARY CONSTRUCTION JUMPER/METER ASSEMBLY MUST BE COMPLETELY REMOVED FROM M.J CAP TO M.J. CAP AND A NEW WATER MAIN IS TO BE CHLORINATED AND INSTALLED COMPLETING THE FINAL CONNECTION.
- BY APPLYING FOR SERVICE, CONTRACTOR/CUSTOMER AGREES TO TAKE WATER SERVICE FROM PASCO COUNTY UTILITIES IN ACCORDANCE WITH THE APPROPRIATE RATE SCHEDULE AND IN ACCORDANCE WITH PASCO COUNTY UTILITIES RULES AND REGULATION.

CREATED 11/18/05 REVISED 05/30/06	TEMPORARY CONSTRUCTION WATER SERVICE	PROVIDED FOR INFORMATIONAL PURPOSES ONLY. NO MODIFICATIONS WITHOUT WRITTEN PCU APPROVAL	
	PASCO COUNTY UTILITIES	DETAIL 01	

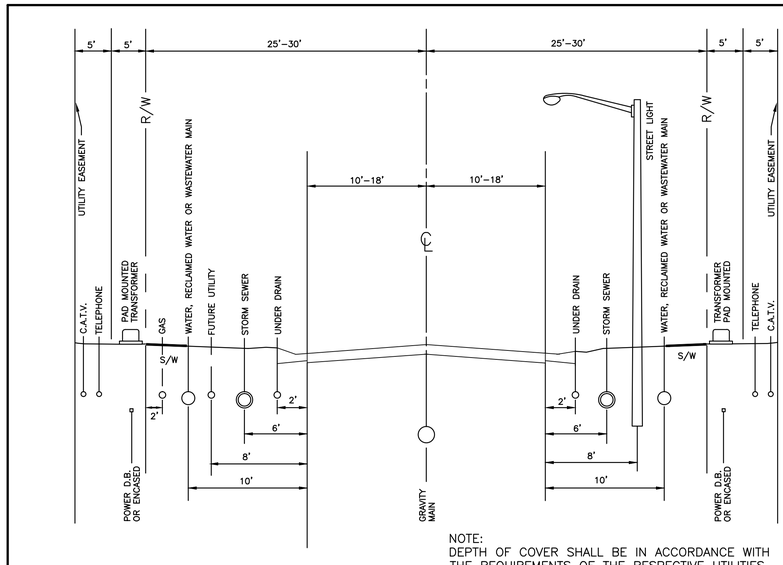

NOTE:
DEPTH OF COVER SHALL BE IN ACCORDANCE WITH THE REQUIREMENTS OF THE RESPECTIVE UTILITIES.

RECOMMENDED UTILITY LOCATIONS

SCALE: N.T.S.

DATE	DESCRIPTION	BY
12-24-14	FDEP REVIEW COMMENTS-27,28,32	NYB
06-19-14	REVISE TITLE BLOCK & OWNER INFO	SDM

REVISIONS

DATE:

EDWIN J. ROGERS P.E. NO. 50082
FLORIDA PROFESSIONAL ENGINEER

Engineering Business Certificate of Authorization No. 28702
Landscape Architecture Certificate of Authorization No. LC26000405

HEIDT DESIGN

5806-B Breckenridge Parkway
Tampa, Florida 33610
Office: 813-253-5311
Fax: 813-464-7629
www.HeidtDesign.com

WATER AND REUSE SYSTEM DETAILS

JOB NO. CNT-CT-025	CONNERTON VILLAGE TWO PARCEL 213
DESIGN MIDDLETON	
DRAWN MIDDLETON	PREPARED FOR: HAYMAN WOODS, L.L.C.
DATE 5-14-2007	Elevations based on National Geodetic Vertical Datum 1929 (NGVD 29) Conversion from NGVD 29 to NAVD 88 = -0.85 Feet
FILE WD2	SHEET 32 OF 35 SHEETS

R:\CONNERTON\WWL - CONNERTON PARCEL 213\ENGINEERING\WD2.DWG-32 OF 35 2015/07/28 5:00 PM BRYANT BOYLES

PIPE RESTRAINT LENGTHS IN FEET
COMMON FITTINGS

WATER MAINS - TEST PRESSURE 150 PSI						
		FITTING TYPE				
		11-1/4°	22-1/2°	45°	90°	DEAD END
PIPE SIZE	4"	2'	4'	8'	20'	45'
	6"	3'	6'	12'	28'	63'
	8"	4'	7'	15'	36'	82'
	10"	4'	9'	18'	43'	98'
	12"	5'	10'	21'	50'	116'
	16"	6'	13'	26'	63'	148'
	20"	7'	15'	31'	76'	179'
	24"	9'	17'	36'	87'	208'

FORCE MAINS - TEST PRESSURE 100 PSI						
		FITTING TYPE				
		11-1/4°	22-1/2°	45°	90°	DEAD END
PIPE SIZE	4"	1'	3'	6'	13'	30'
	6"	2'	4'	8'	19'	42'
	8"	2'	5'	10'	24'	55'
	10"	3'	6'	12'	29'	66'
	12"	3'	7'	14'	34'	77'
	16"	4'	8'	18'	42'	99'
	20"	5'	10'	21'	50'	119'
	24"	6'	11'	24'	58'	139'

RESTRAINT LENGTHS ARE MEASURED FROM THE CENTER LINE OF THE FITTING ALONG THE PIPE IN BOTH DIRECTIONS (EXCEPT DEAD ENDS).

CREATED 02/24/03	RESTRAINED JOINT TABLE	PROVIDED FOR INFORMATIONAL PURPOSES ONLY. NO MODIFICATIONS WITHOUT WRITTEN PCU APPROVAL
REVISED	COMMON FITTINGS	
	PASCO COUNTY UTILITIES	DETAIL 28

PIPE RESTRAINT LENGTHS IN FEET
TEES (BRANCH SIDE)

WATER MAINS - TEST PRESSURE 150 PSI									
		BRANCH SIZE							
		3"	4"	6"	8"	10"	12"	16"	20"	24"
RUN SIZE	3"	6'	14'	30'	—	—	—	—	—	—
	4"	2'	11'	28'	44'	—	—	—	—	—
	6"	1'	2'	22'	40'	52'	—	—	—	—
	8"	1'	1'	16'	35'	48'	62'	—	—	—
	10"	1'	1'	10'	30'	44'	58'	83'	—	—
	12"	1'	1'	3'	25'	40'	55'	80'	103'	—
	16"	1'	1'	1'	14'	31'	48'	75'	98'	119'
	20"	1'	1'	1'	2'	22'	40'	69'	94'	116'
	24"	1'	1'	1'	1'	11'	31'	63'	89'	111'

RESTRAINT LENGTHS ARE MEASURED FROM THE CENTER LINE OF THE TEE ALONG THE BRANCH FOR THE DISTANCE INDICATED. A MINIMUM OF 5 FEET OF RESTRAINED PIPE MUST BE INSTALLED ON BOTH RUNS OF THE TEE. MEGALUG TYPE RESTRAINERS ARE REQUIRED ON ALL JOINTS.

CREATED 02/24/03	RESTRAINED JOINT TABLE	PROVIDED FOR INFORMATIONAL PURPOSES ONLY. NO MODIFICATIONS WITHOUT WRITTEN PCU APPROVAL
REVISED	TEES (BRANCH SIDE)	
	PASCO COUNTY UTILITIES	DETAIL 29

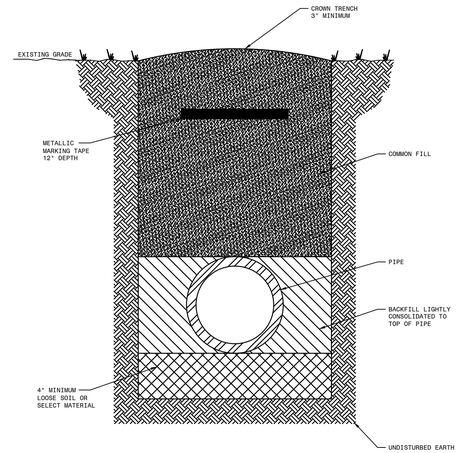

NOTES: –LOOSE SOIL OR SELECT MATERIAL IS NATIVE SOIL EXCAVATED FROM THE TRENCH FREE OF ROCKS AND FOREIGN MATERIAL.
–COMMON FILL TO BE PLACED AND COMPACTED IN 12" LAYERS. ROLLING EQUIPMENT SHALL NOT BE USED FOR COMPACTION UNTIL A MINIMUM OF 18" OF COMMON FILL HAS BEEN PLACED AND COMPACTED OVER THE PIPE. THREE FEET OF FILL SHALL BE PLACED BEFORE A HYDROHAMMER MAY BE USED FOR COMPACTION.

NTS

CREATED 02/24/03	PIPE LAYING CONDITIONS	PROVIDED FOR INFORMATIONAL PURPOSES ONLY. NO MODIFICATIONS WITHOUT WRITTEN PCU APPROVAL
REVISED	STANDARD UNPAVED AREAS	
	PASCO COUNTY UTILITIES	DETAIL 32

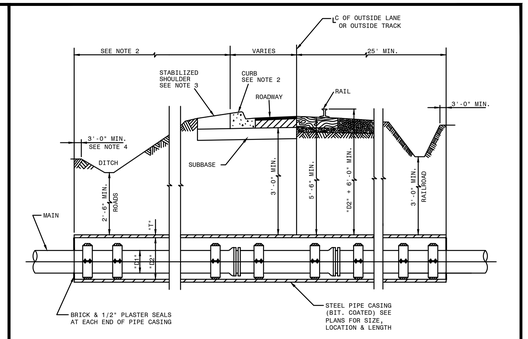

NOTE:
1. VERTICAL DIMENSIONS ARE TYPICAL FOR MAINS.
2. CASINGS SHALL TERMINATE 8' MINIMUM BEYOND EDGE OF PAVEMENT.
3. CASINGS SHALL HAVE 30" MINIMUM COVER UNDER DITCH BOTTOMS AND 36" ELSEWHERE.
4. GRAVITY SEWERS SHALL BE PROPERLY ANCHORED TO PREVENT FLOATATION WITH SPACERS ADJUSTED TO PROVIDE THE SLOPE REQUIRED.
5. SEE SECTION B.2 FOR CASING SIZE.

CARRIER PIPE (INCHES)	CASING PIPE (INCHES)	CASING WALL THICKNESS (INCHES)
4	12	1/4
6	16	1/4
8	16	1/4
10	24	5/16
12	24	5/16
16	30	3/8
20	36	3/8
24	42	3/8
30	48	3/8
36	54	1/2
42	60	1/2
48	66	1/2

CREATED 02/24/03	JACK & BORE	PROVIDED FOR INFORMATIONAL PURPOSES ONLY. NO MODIFICATIONS WITHOUT WRITTEN PCU APPROVAL
REVISED	DETAIL	
	PASCO COUNTY UTILITIES	DETAIL 35

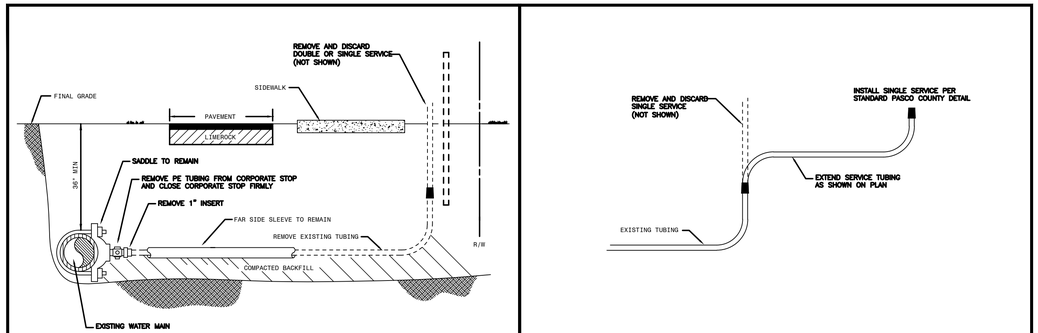

	WATER & REUSE WATER SERVICE SINGLE FAR SIDE, SINGLE NEAR SIDE DOUBLE FAR SIDE, DOUBLE NEAR SIDE	
	SERVICE REMOVAL DETAIL	

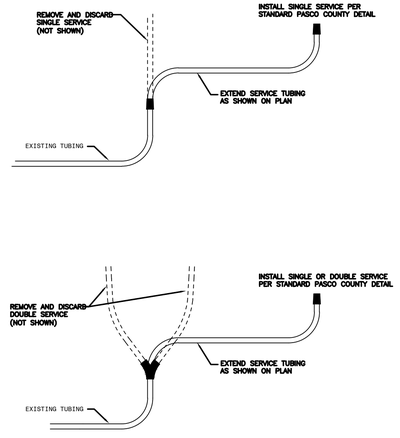

	WATER & REUSE WATER SERVICE	
	SERVICE RELOCATION DETAIL	

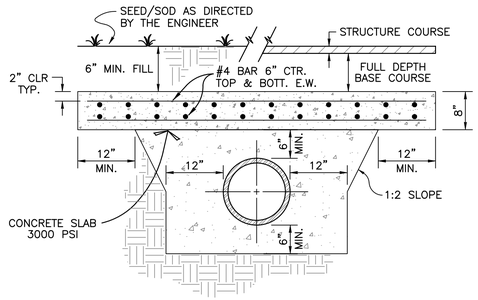

CONCRETE SHOCK PAD

NOTE:
ALL PRESSURIZED PIPE WILL BE INSTALLED AT A MAXIMUM DEPTH OF FIVE FEET. TO MEET THIS REQUIREMENT, AT CROSSINGS WITH STORM SEWER OR SANITARY SEWER PIPING, PRESSURIZED PIPE MAY NEED TO BE CONSTRUCTED ON TOP. IF A MINIMUM THREE FEET OF COVER IS NOT ACHIEVABLE, A CONCRETE SHOCK PAD WILL BE INSTALLED (SEE DETAIL AT RIGHT).

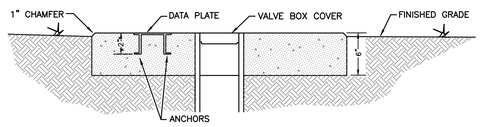

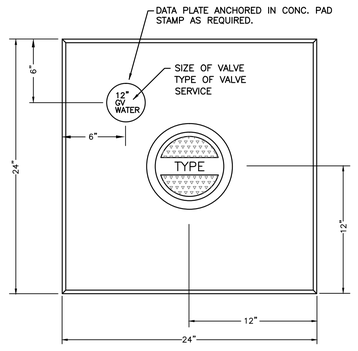

CONCRETE VALVE PAD
(FOR UNPAVED AREAS)

NOTES:

CONCRETE TO BE TYPE I GENERAL PORTLAND CEMENT WITH 3/4" TOP SIZE AGGREGATE AND SHALL DEVELOP A 28-DAY STRENGTH OF 3000 P.S.I.

CONCRETE VALVE PAD SHALL BE POURED IN PLACE AND SHALL BE SET 1/2" ABOVE FINISHED GRADE

DATE	DESCRIPTION	BY
07-28-15	ADDED SERVICE REMOVAL DETAIL	BAB
06-19-14	REVISE TITLE BLOCK & OWNER INFO	SDM

REVISIONS

Engineering Business Certificate of Authorization No. 28782
Landscape Architecture Certificate of Authorization No. LC26000405
HEIDT DESIGN
5806-B Breckenridge Parkway
Tampa, Florida 33610
Office: 813-253-5311
Fax: 813-464-7629
www.HeidtDesign.com

DATE:
EDWIN J. ROGERS P.E. NO. 50082
FLORIDA PROFESSIONAL ENGINEER

WATER AND REUSE SYSTEM DETAILS

JOB NO. CNT-CT-025	**CONNERTON VILLAGE TWO PARCEL 213**
DESIGN MIDDLETON	
DRAWN MIDDLETON	PREPARED FOR: **HAYMAN WOODS, L.L.C.**
DATE 5-14-2007	Elevations based on National Geodetic Vertical Datum 1929 (NGVD 29) Conversion from NGVD 29 to NAVD 88 = -0.85 Feet
FILE WD3	**SHEET 33 OF 35 SHEETS**

R:\CONNERTON\WWL - CONNERTON\PARCEL 213\ENGINEERING\WD3.DWG-33 OF 35 2015/07/28 5:00 PM BRYANT BOYLES

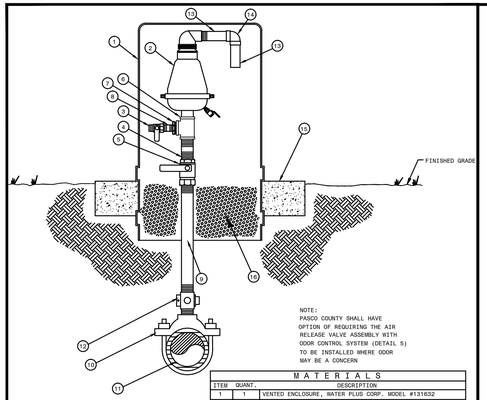

NOTE:
PASCO COUNTY SHALL HAVE OPTION OF REQUIRING THE AIR RELEASE VALVE ASSEMBLY WITH ODOR CONTROL SYSTEM (DETAIL 5) TO BE INSTALLED WHERE ODOR MAY BE A CONCERN

MATERIALS		
ITEM	QUANT.	DESCRIPTION
1	1	VENTED ENCLOSURE, WATER PLUS CORP. MODEL #131632
2	1	AIR RELEASE VALVE 2" NPT (SEE BELOW)
		SEWER AIR RELEASE VALVES SHALL BE ARI MODEL D-025
		WATER AIR RELEASE VALVES SHALL BE VALMATIC OR EQUAL
3	1	1" CURB STOP, S.S.
4	1	2" x 4" NIPPLE, S.S.
5	1	2" BALL VALVE, S.S.
6	1	2" TEE, S.S.
7	1	2" X 1" REDUCER, S.S.
8	1	1" SHORT NIPPLE, S.S.
9	1	2" PIPE, S.S. LENGTH AS REQUIRED
10	1	2" DOUBLE STRAP TAPPING SADDLE, S.S.
11	1	4" & LARGER PIPE, D.I. OR PVC (DR-18)
12	1	2" CORPORATION BRASS
13	2	1-1/2" PIPE, PVC, LENGTH AS REQUIRED
14	1	1-1/2" x 90° ELBOW, PVC
15	1	CONCRETE SLAB AROUND ENCLOSURE
16	1	#57 WHITE ROCK

NOTE:
VENTED ENCLOSURE TO BE COLOR CODED AS FOLLOWS:

WATER MAIN – BLUE
FORCE MAIN – GREEN
REUSE MAIN – PURPLE

CREATED 02/24/03	STANDARD AIR RELEASE VALVE ASSEMBLY (VERTICAL PIPE LAYOUT)	PROVIDED FOR INFORMATIONAL PURPOSES ONLY. NO MODIFICATIONS WITHOUT WRITTEN PCU APPROVAL
REVISED	PASCO COUNTY UTILITIES	DETAIL 4

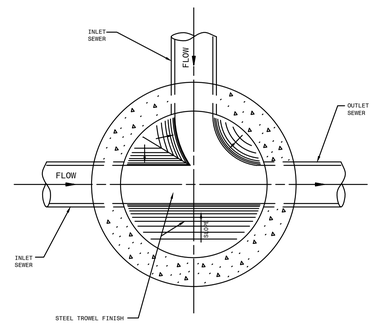

CREATED 02/24/03	STANDARD MANHOLE (BENCH AND INVERTS)	PROVIDED FOR INFORMATIONAL PURPOSES ONLY. NO MODIFICATIONS WITHOUT WRITTEN PCU APPROVAL
REVISED	PASCO COUNTY UTILITIES	DETAIL 36

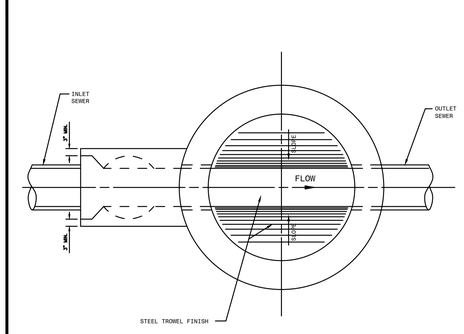

NOTE:
DROP MANHOLE TO BE USED WHEN THE DIFFERENCE BETWEEN INVERTS IS 2' OR MORE.

CREATED 02/24/03	DROP MANHOLE (BENCH AND INVERTS)	PROVIDED FOR INFORMATIONAL PURPOSES ONLY. NO MODIFICATIONS WITHOUT WRITTEN PCU APPROVAL
REVISED	PASCO COUNTY UTILITIES	DETAIL 37

NOTE:
PRECAST CONCRETE SHALL ATTAIN A MINIMUM COMPRESSIVE STRENGTH OF 4,000 p.s.i. AT 28 DAYS.

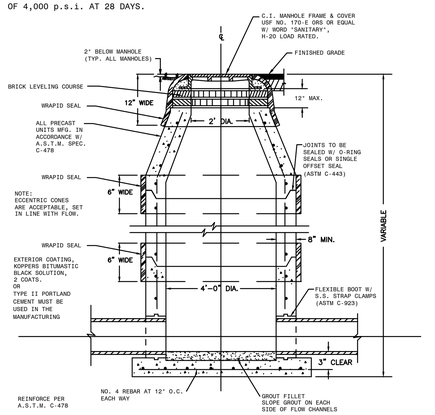

NOTE: 1. WRAPID SEAL MUST BE USED ON ALL JOINTS, CASTINGS AND RISER RINGS: ON ALL JOINTS ON AIR RELEASES, MANHOLES, GREASE/WATER, OIL/WATER SEPARATORS, AND WETWELLS.
2. WRAPID SEAL MUST BE USED IN ACCORDANCE WITH MANUFACTURES RECOMMENDATIONS.
3. PASCO COUNTY SHALL HAVE THE OPTION OF SPECIFYING THE TYPE OF INTERIOR LINING TO BE INSTALLED FOR EACH INDIVIDUAL MANHOLE.
4. PASCO COUNTY SHALL HAVE THE OPTION OF REQUIRING A NEGATIVE PRESSURE TEST PER ASTM C-1244
5. LIFT HOLES MUST NOT PENETRATE THE WALLS

CREATED 02/24/03	STANDARD MANHOLE	PROVIDED FOR INFORMATIONAL PURPOSES ONLY. NO MODIFICATIONS WITHOUT WRITTEN PCU APPROVAL
REVISED	PASCO COUNTY UTILITIES	DETAIL 38

NOTE:
ECCENTRIC CONES ARE ACCEPTABLE, SET IN LINE WITH FLOW.

EXTERIOR COATING, KOPPERS BITUMASTIC BLACK SOLUTION, 2 COATS. OR TYPE II PORTLAND CEMENT MUST BE USED IN THE MANUFACTURING PROCESS

NOTE:
PRECAST CONCRETE SHALL ATTAIN A MINIMUM COMPRESSIVE STRENGTH OF 4,000 p.s.i. AT 28 DAYS.

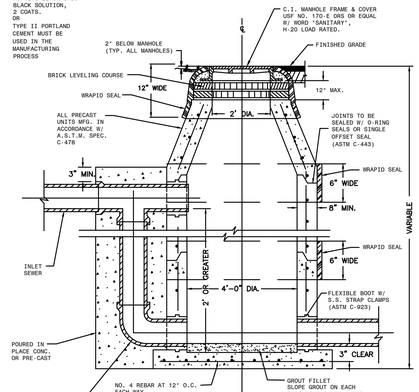

NOTE: 1. WRAPID SEAL MUST BE USED ON ALL JOINTS, CASTINGS AND RISER RINGS: ON ALL JOINTS ON AIR RELEASES, MANHOLES, GREASE/WATER, OIL/WATER SEPARATORS, AND WETWELLS.
2. WRAPID SEAL MUST BE USED IN ACCORDANCE WITH MANUFACTURES RECOMMENDATIONS.
3. PASCO COUNTY SHALL HAVE THE OPTION OF SPECIFYING THE TYPE OF INTERIOR LINING TO BE INSTALLED FOR EACH INDIVIDUAL MANHOLE.
4. PASCO COUNTY SHALL HAVE THE OPTION OF REQUIRING A NEGATIVE PRESSURE TEST PER ASTM C-1244
5. LIFT HOLES MUST NOT PENETRATE THE WALLS

CREATED 02/24/03	DROP MANHOLE	PROVIDED FOR INFORMATIONAL PURPOSES ONLY. NO MODIFICATIONS WITHOUT WRITTEN PCU APPROVAL
REVISED	PASCO COUNTY UTILITIES	DETAIL 39

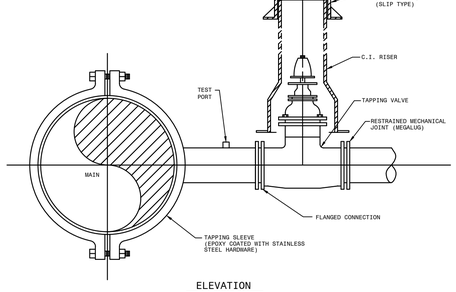

ELEVATION

NOTES:
- SADDLE CONNECTION WILL BE TESTED TO 150 PSI PRIOR TO TAPPING MAIN.
- MECHANICAL JOINTS/UNDERGROUND PIPING SHALL BE RESTRAINED AS SPECIFIED BY COUNTY/ENGINEER.
- VALVE EXTENSION ROD SHALL BE UTILIZED, AS NECESSARY, SO THAT VALVE OPERATING NUT IS A MAXIMUM OF 3' BELOW GRADE.

CREATED 02/24/03	WATER, REUSE, AND FORCE MAIN TAPPING DETAIL W/ VALVE LOCATION	PROVIDED FOR INFORMATIONAL PURPOSES ONLY. NO MODIFICATIONS WITHOUT WRITTEN PCU APPROVAL
REVISED	PASCO COUNTY UTILITIES	DETAIL 34

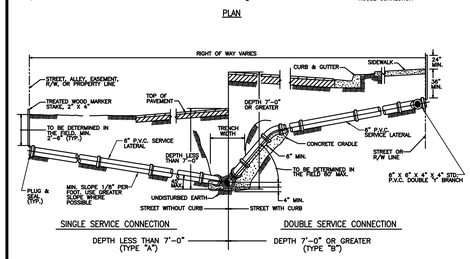

PLAN

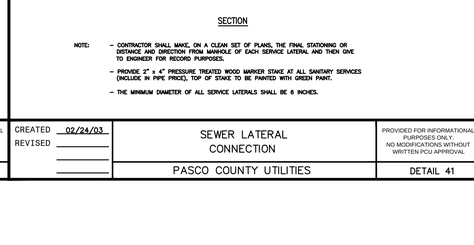

SECTION

NOTE:
- CONTRACTOR SHALL MARK, ON A CLEAN SET OF PLANS, THE FINAL STATIONING OR DISTANCE AND DIRECTION FROM MANHOLE OF EACH SERVICE LATERAL AND THEN GIVE TO ENGINEER FOR RECORD PURPOSES.
- PROVIDE 2" x 4" PRESSURE TREATED WOOD MARKER STAKE AT ALL SANITARY SERVICES (INCLUDE IN PIPE PRICE), TOP OF STAKE TO BE PAINTED WITH GREEN PAINT.
- THE MINIMUM DIAMETER OF ALL SERVICE LATERALS SHALL BE 6 INCHES.

CREATED 02/24/03	SEWER LATERAL CONNECTION	PROVIDED FOR INFORMATIONAL PURPOSES ONLY. NO MODIFICATIONS WITHOUT WRITTEN PCU APPROVAL
REVISED	PASCO COUNTY UTILITIES	DETAIL 41

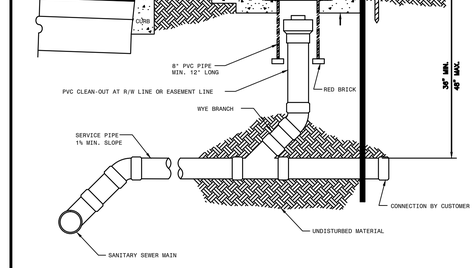

NTS

CREATED 02/24/03	SANITARY SEWER - SINGLE WYE CONNECTION AND TYPICAL CLEAN-OUT	PROVIDED FOR INFORMATIONAL PURPOSES ONLY. NO MODIFICATIONS WITHOUT WRITTEN PCU APPROVAL
REVISED	PASCO COUNTY UTILITIES	DETAIL 42

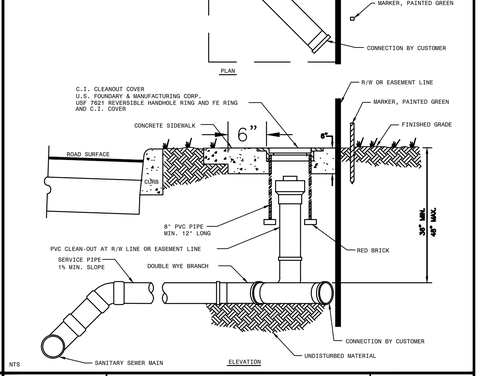

NTS ELEVATION

CREATED 02/24/03	SANITARY SEWER - DOUBLE WYE CONNECTION AND TYPICAL CLEAN-OUT	PROVIDED FOR INFORMATIONAL PURPOSES ONLY. NO MODIFICATIONS WITHOUT WRITTEN PCU APPROVAL
REVISED	PASCO COUNTY UTILITIES	DETAIL 43

DATE	DESCRIPTION	BY
06-19-14	REVISE TITLE BLOCK & OWNER INFO	SDM

REVISIONS

Engineering Business Certificate of Authorization No. 28782
Landscape Architecture Certificate of Authorization No. LC26000405

HEIDT DESIGN
5806-B Breckenridge Parkway
Tampa, Florida 33610
Office: 813-253-5311
Fax: 813-464-7629
www.HeidtDesign.com

DATE:
EDWIN J. ROGERS P.E. NO. 50082
FLORIDA PROFESSIONAL ENGINEER

SANITARY SEWER SYSTEM DETAILS

JOB NO. CNT-CT-025	CONNERTON VILLAGE TWO PARCEL 213
DESIGN MIDDLETON	
DRAWN MIDDLETON	PREPARED FOR: HAYMAN WOODS, L.L.C.
DATE 5-14-2007	Elevations based on National Geodetic Vertical Datum 1929 (NGVD 29) Conversion from NGVD 29 to NAVD 88 = -0.85 Feet
FILE SD1	SHEET 34 OF 35 SHEETS

R:\CONNERTON\WWL - CONNERTON\PARCEL 213\ENGINEERING\SD1.DWG-34 OF 35 2015/07/28 5:00 PM BRYANT BOYLES

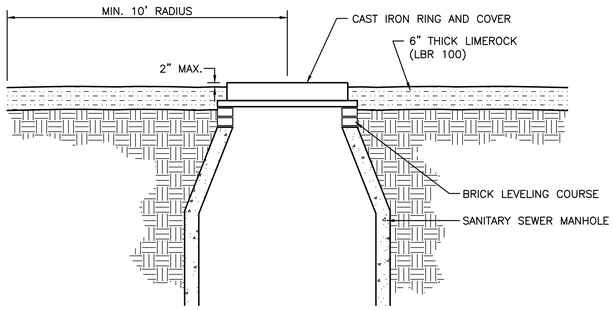

MANHOLE STABILIZATION IN UNPAVED AREAS

NOT TO SCALE

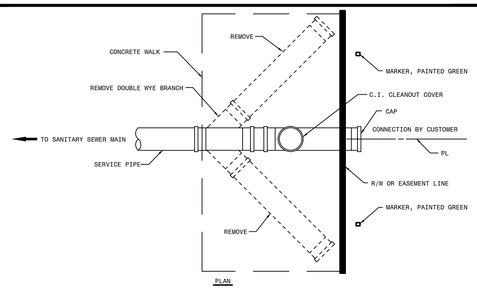

PLAN

NTS ELEVATION

SANITARY SEWER - DOUBLE WYE CONNECTION AND TYPICAL CLEAN-OUT	
CONVERT DOUBLE SERVICE TO SINGLE DETAIL	

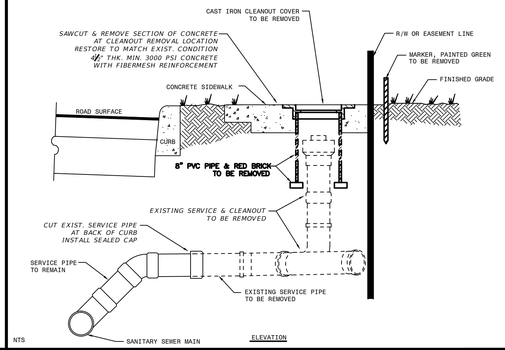

NTS ELEVATION

SANITARY SEWER AND TYPICAL CLEAN-OUT	
SERVICE ABANDONMENT DETAIL	

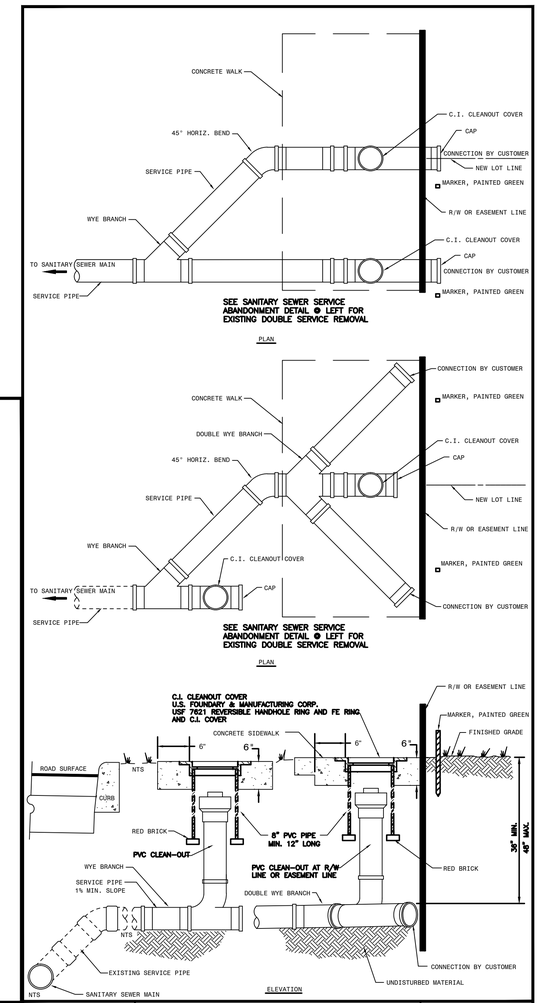

PLAN ELEVATION

SANITARY SEWER - DOUBLE WYE CONNECTION AND TYPICAL CLEAN-OUT	
RELOCATE DOUBLE SERVICE DETAIL	

DATE	DESCRIPTION	BY
07-28-15	ADDED SERVICE REMOVAL DETAILS	BAB
06-19-14	REVISE TITLE BLOCK & OWNER INFO	SDM

REVISIONS

Engineering Business Certificate of Authorization No. 28782
Landscape Architecture Certificate of Authorization No. LC26000405

HEIDT DESIGN

5806-B Breckenridge Parkway
Tampa, Florida 33610
Office: 813-253-5311
Fax: 813-464-7629
www.HeidtDesign.com

DATE:

EDWIN J. ROGERS P.E. NO. 50082
FLORIDA PROFESSIONAL ENGINEER

SANITARY SEWER SYSTEM DETAILS

JOB NO. HWL-CT-1070	**CONNERTON VILLAGE TWO PARCEL 213**
DESIGN MIDDLETON	
DRAWN MIDDLETON	PREPARED FOR: **HAYMAN WOODS, L.L.C.**
DATE 5-14-2007	**Elevations based on National Geodetic Vertical Datum 1929 (NGVD 29)** Conversion from NGVD 29 to NAVD 88 = -0.85 Feet
FILE SD2	**SHEET 35 OF 35 SHEETS**

R:\CONNERTON\HWL - CONNERTON\PARCEL 213\ENGINEERING\SD2.DWG-35 OF 35 2015/07/28 5:00 PM BRYANT BOYLES

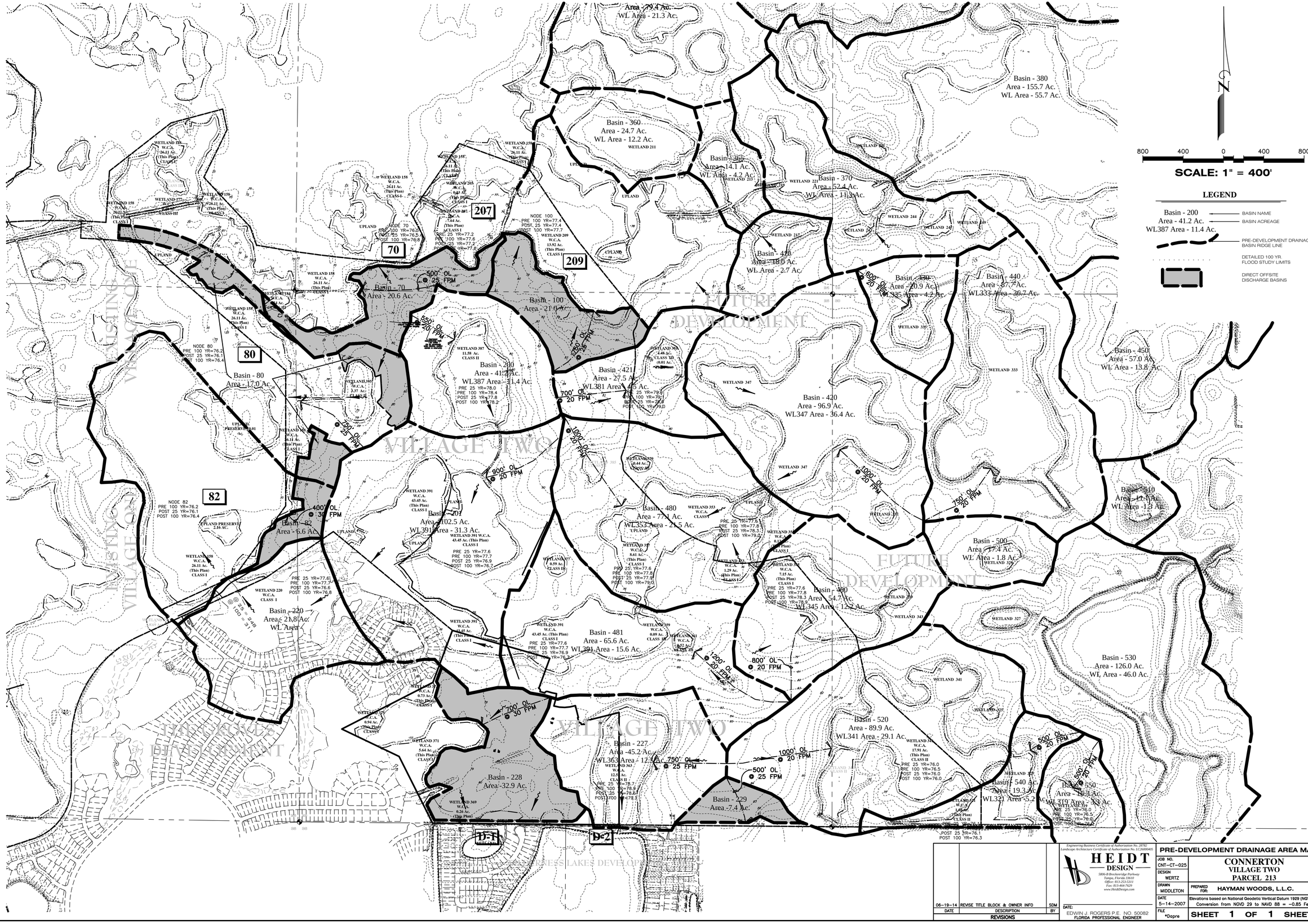

R:\CONNERTON\WL - CONNERTON\PARCEL 213\ENGINEERING\DAPRE.DWG--1 OF 1 2015/07/28 5:00 PM BRYANT BOYLES

DATE	DESCRIPTION	BY
06-19-14	REVISE TITLE BLOCK & OWNER INFO	SDM

REVISIONS

Engineering Business Certificate of Authorization No. 28782
Landscape Architecture Certificate of Authorization No. LC26000405
HEIDT DESIGN
5806-B Breckenridge Parkway
Tampa, Florida 33610
Office: 813-253-5311
Fax: 813-464-7629
www.HeidtDesign.com
DATE:
EDWIN J. ROGERS P.E. NO. 50082
FLORIDA PROFESSIONAL ENGINEER

PRE-DEVELOPMENT DRAINAGE AREA MAP

JOB NO.	CONNERTON VILLAGE TWO PARCEL 213
CNT-CT-025	
DESIGN	WERTZ
DRAWN	MIDDLETON
DATE	5-14-2007
FILE	*Dapre
PREPARED FOR:	HAYMAN WOODS, L.L.C.
Elevations based on National Geodetic Vertical Datum 1929 (NGVD 29) Conversion from NGVD 29 to NAVD 88 = -0.85 Feet	

SHEET 1 OF 1 SHEETS

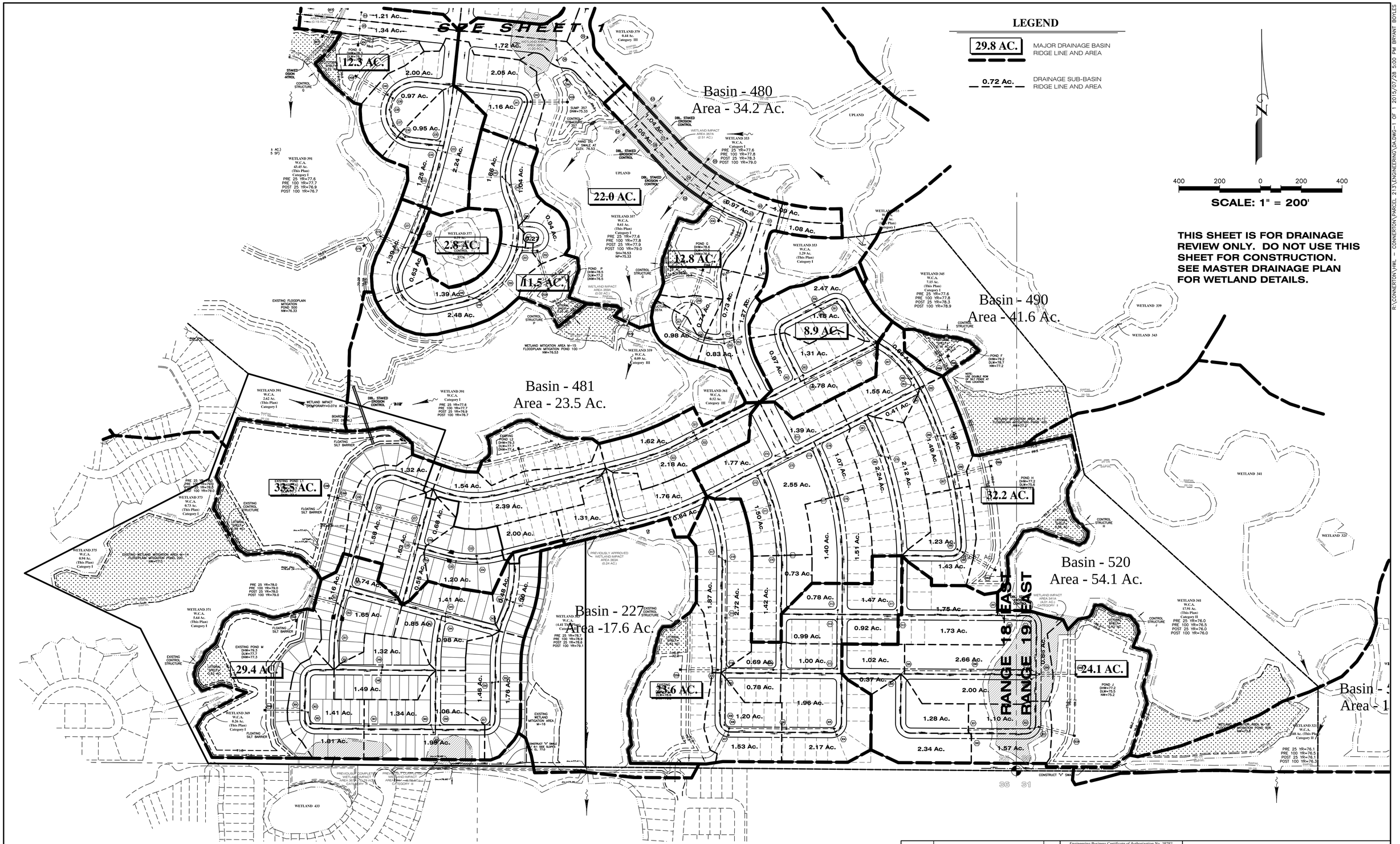

DATE	DESCRIPTION	BY
06-19-14	REVISE TITLE BLOCK & OWNER INFO	SDM

REVISIONS

Engineering Business Certificate of Authorization No. 28782
Landscape Architecture Certificate of Authorization No. LC26000405

HEIDT DESIGN
5806-B Breckenridge Parkway
Tampa, Florida 33610
Office: 813-253-5311
Fax: 813-464-7629
www.HeidtDesign.com

DATE:
EDWIN J. ROGERS P.E. NO. 50082
FLORIDA PROFESSIONAL ENGINEER

DRAINAGE AREA MAP

JOB NO. HWL-CT-1070	CONNERTON VILLAGE TWO PARCEL 213
DESIGN WERTZ	
DRAWN MIDDLETON	PREPARED FOR: HAYMAN WOODS, L.L.C.
DATE 5-14-2007	Elevations based on National Geodetic Vertical Datum 1929 (NGVD 29) Conversion from NGVD 29 to NAVD 88 = -0.85 Feet
FILE *DA	SHEET 1 OF 1 SHEETS

R:\CONNERTON\HWL - CONNERTON\PARCEL 213\ENGINEERING\DA.DWG-1 OF 1 2015/07/28 5:00 PM BRYANT BOYLES

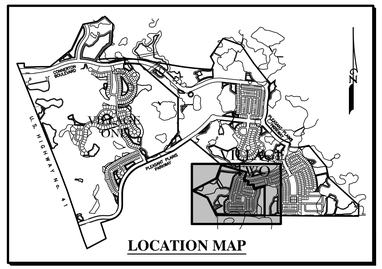

N

SCALE: 1" = 100'

CONNERTON VILLAGE TWO PARCEL 1C WETLAND SUMMARY TABLE		
WETLAND IDENTIFICATION	ACRES ON SITE	NEW IMPACT ID / ACRES
363	4.41	0
365	0.60	365A / 0.60*
367	0.79	367A / 0.79*
369	0.26	0
371	5.64	0
373	0.73	0
375	0.94	0
391	2.62	0.07**
TOTAL ACRES	15.99	1.39

* PREVIOUSLY APPROVED WETLAND IMPACTS
** TEMPORARY IMPACT

THE GROVES
FLORIDA DREAM COMMUNITIES
ZONED - MPUD
LAND USE - RES 3
P.B. 55, PG. 049

WETLAND 373
W.C.A.
0.73 Ac.
(This Plan)
Category I
SH=77.40
NP=
PRE 25 YR=78.0
PRE 100 YR=79.0
POST 25 YR=78.0
POST 100 YR=79.0

WETLAND 375
W.C.A.
0.94 Ac.
(This Plan)
Category I

EXISTING WETLAND MITIGATION AREA M-14
FLOODPLAIN MITIGATION POND, 200
NW=77.3

THE GROVES
COMMUNITY DEVELOPMENT DISTRICT
ZONED - MPUD
LAND USE - RES 3
P.B. 48, PG. 23

WETLAND 371
W.C.A.
5.64 Ac.
(This Plan)
Category I
SH=77.28
NP=76.77
PRE 25 YR=78.0
PRE 100 YR=79.0
POST 25 YR=78.0
POST 100 YR=79.0

WETLAND 369
W.C.A.
0.26 Ac.
(This Plan)
Category I

WETLAND 391
W.C.A.
2.62 Ac.
(This Plan)
Category I

WETLAND 391
W.C.A.
Category I
PRE 25 YR=77.6
PRE 100 YR=77.7
POST 25 YR=76.9
POST 100 YR=76.7

WETLAND IMPACT
(TEMPORARY=0.07± AC.)

DBL. STAKED EROSION CONTROL

BOARDWALK
(SEE DETAIL)

FLOATING SILT BARRIER

EXISTING VILLAGE TWO PHASE 1B PARCEL 210 P.B. 59, PG. 056

EXISTING VILLAGE TWO PHASE 1A PARCEL 211 P.B. 58, PG. 056

VILLAGE TWO PHASE 1C-1 PARCEL 213

EXISTING POND L1
(PHASE 1A)
DHW=79.3
DLW=77.7
DNW=77.4

EXISTING POND L2
DHW=79.3
DLW=77.7
DNW=77.4

EXISTING POND M
DHW=79.3
DLW=77.7
DNW=77.3

EXISTING POND K
DHW=80.2
DLW=78.6
DNW=78.2

EXISTING CONTROL STRUCTURE

LITTORAL SHELF = 0.59 AC.

LITTORAL SHELF = 0.52 AC.

LITTORAL SHELF = 0.42 AC.

LB-17 (12') (69.0)
LB-18 (12') (69.5)
LB-20 (20') (59.5)
LB-21 (20') (59.5)
LB-22 (12') (67.5)
LB-23 (17') (61.5)
LB-24 (17') (61.5)
LB-25 (12') (66.0)
LB-26 (12') (66.0)
LB-27 (17') (60.5)
LB-28 (20') (58.0)
LB-29 (12') (66.0)
LB-30 (12') (65.5)
LB-31 (17') (60.0)
LB-32 (17') (60.0)
LB-93 (22') (64.8)

SOUTHERN CHARM DRIVE
SUNLIT HORIZON LANE
BILLOWY JAUNT DRIVE
FIRE FROST LANE
STARRY EYES WAY
WISTFUL YEARN DRIVE
MOONGARDEN LANE

EXISTING VILLAGE TWO PHASE 1A PARCEL 211

SANITARY SEWER PUMP STATION

PREVIOUSLY APPROVED WETLAND IMPACT AREA 363A (0.24 AC.)

WETLAND 363
W.C.A.
(4.41 This Plan)
Category II
PRE 25 YR=78.7
PRE 100 YR=78.9
POST 25 YR=78.6
POST 100 YR=79.1
SH=78.13
NP=76.36

EXISTING WETLAND MITIGATION AREA M-16

CONSTRUCT V SWALE W/ 6:1 SIDE SLOPES INV. EL. 77.0

POCKET PARK (0.38 Ac.)

SWFWL POCKET PARK (0.75 Ac.)

PREVIOUSLY COMPLETED WETLAND IMPACT AREA 367A - (0.79 AC.) CATEGORY III

PREVIOUSLY COMPLETED WETLAND IMPACT AREA 365A - (0.60 AC.) CATEGORY III

WETLAND 433
SH=77.20
NP=76.11

WILDERNESS LAKE PRESERVE
PHASE III
ZONED - MPUD
LAND USE - RES 3
P.B. 53, PG. 102

LEGEND

EXISTING	PROPOSED	
----□----	——■——	STORM DRAINAGE STRUCTURE
	(10)	STRUCTURE NO.
+75.00	75.00	ELEVATION
75	75	CONTOUR
		DIRECTION OF SLOPE
UD	UDCO	UNDERDRAIN WITH CLEANOUT
	▲PZUP-2	EXISTING PIEZOMETER LOCATION
	LB-1 (20') (56.6)	POND BORING LOCATION EXCAVATION DEPTH EXCAVATION BOTTOM ELEVATION
		STAKED EROSION CONTROL
SWFWL	SWFWL	SWFWMD WETLAND LINE
25' OS	25' OS	25' OFFSET FROM WETLAND LINE (SHOWN FOR INFORMATIONAL PURPOSES)
		SWFWMD PROJECT LIMITS (34.6 AC.)

DATE	DESCRIPTION	BY
07-28-15	REVISE PHASE 1C-3 LAYOUT	BAB
06-19-14	REVISE TITLE BLOCK & OWNER INFO	SDM
10-01-07	LOTS 13/14 BLK.17 PER PASCO DRC	RRR
07-26-07	REMOVE CROSSING ON SOUTHERN CHARM DR.	RRR
07-13-07	SWFWMD PROJECT LIMITS	RRR

REVISIONS

APPLICANT NAME Stewart Gibbons

APPLICANT SIGNATURE _____

Engineering Business Certificate of Authorization No. 28782
Landscape Architecture Certificate of Authorization No. LC26000405

HEIDT DESIGN
5806-B Breckenridge Parkway
Tampa, Florida 33610
Office: 813-253-5311
Fax: 813-464-7629
www.HeidtDesign.com

DATE:
EDWIN J. ROGERS P.E. NO. 50082
FLORIDA PROFESSIONAL ENGINEER

CONSTRUCTION SURFACE WATER MANAGEMENT PLAN

JOB NO. HWL-CT-1070	CONNERTON VILLAGE TWO PARCEL 213
DESIGN WERTZ	
DRAWN MIDDLETON	PREPARED FOR: HAYMAN WOODS, L.L.C.
DATE 5-14-2007	Elevations based on National Geodetic Vertical Datum 1929 (NGVD 29) Conversion from NGVD 29 to NAVD 88 = -0.85 Feet
FILE *CSWMP1	SHEET 1 OF 2 SHEETS

R:\CONNERTON\HWL - CONNERTON\PARCEL 213\ENGINEERING\CSWMP1.DWG--1 OF 2 2015/07/28 5:00 PM BRYANT BOYLES

Pond/Lake Excavation Note
No excavation shall extend below the permitted design depths/elevations shown on the drawings, unless additional testing supports otherwise; and no lower semi–confining unit clayey soil material and/or no limestone materials shall be excavated, regardless if these materials are encountered within the permitted excavation depths/elevations. If any lower semi–confining unit clayey soil materials or limestone materials are encountered above the permitted depths/elevations, then excavation operations shall cease in the general area and the Engineer of Record shall be notified immediately.

STORM WATER POLLUTION PREVENTION PLAN

Contained on these plans and within the following notes is a Storm Water Pollution Prevention Plan (The Plan) which has been developed by Heidt Design L.L.C. in accordance with the Environmental Protection Agency's "National Pollutant Discharge Elimination System" (NPDES) General Permit.

The following entities are identified as team members of "The Plan": Heidt Design L.L.C., the Developer as identified in the title box of these plans, and the site contractor and his sub–contractors. Each team member has specific responsibilities and obligations. In general, all team members, with regard to their involvement and responsibilities on the project, are to implement all necessary storm water management controls to assure compliance with the NPDES General Permit for Storm Water Discharges from Construction Activities, the Southwest Florida Water Management District Permit, the applicable local governing agency (i.e. Hillsborough County, City of Tampa, etc) and the guidelines listed in the SWPPP. The duties and responsibilities of the team members as they pertain to the SWPPP are as follows:

Heidt Design L.L.C.

A. Develop Storm Water Pollution Prevention Plan (SWPPP) including, but not limited to, retention/detention ponds, control structures, erosion control methods and locations and stabilization criteria. This design is included within these construction plans and the following notes and instructions.

B. Submit and obtain the necessary design related storm water permits from the Florida Department of Environmental Protection, the Southwest Florida Water Management District and other applicable governmental bodies.

C. Upon notification by the developer of his intent to commence construction, submit a Notice of Intent to the Environmental Protection Agency on behalf of the developer and the contractor. Also, submit a copy of the SWFWMD permit or completeness letter if the permit is not yet available. This submittal will be made no later than 48 hours prior to beginning of construction.

D. Submit to SWFWMD and the operator of the municipal separate storm water system, if applicable, a letter of construction commencement.

E. Complete and submit a Notice of Termination and certification for developer and contractor. The NOT's shall be submitted no more than 30 days after
(a) completion of the project and final stabilization of the site or
(b) when responsibility for the site has ended. Final stabilization as defined by EPA is when all soil disturbing activities at the site have been completed and a uniform (e.g. evenly distributed, without large bare areas) perennial vegetative cover with a density of 70% of the native background vegetative cover for the area has been established on all unpaved areas and areas not covered by permanent structures. As an alternative, equivalent permanent stabilization measures (such as riprap, gabions, or geotextiles) may be employed. Both the client and contractor shall notify Heidt Design L.L.C. when one of these criteria has been met.

Contractor

A. Sign and return to Heidt a Notice of Intent and a Certification of Storm Water Pollution Prevention Plan no later than 48 hours prior to commencement of construction. Copy Heidt Design L.L.C. and the developer on the NOI permit when received. Also, each subcontractor affected by the SWPPP must certify to the contractor that they understand and shall comply with the NPDES permit and SWPPP. A record of these certifications shall be maintained by the contractor on site.

B. During construction, assure compliance with the designed Storm Water Pollution Prevention Plans prepared by Heidt Design L.L.C. and the NPDES General Permit for Storm Water Discharges from Construction Activities.

C. Maintain a copy of the construction plans, which include the Storm Water Pollution Prevention Plan both NOI's and all inspection reports and certifications on site.

D. Undertake all reasonable Best Management Practices (BMP's) to assure that silted or otherwise polluted storm water is not allowed to discharge from the site during all phases of construction. Stabilization BMP's that may be used include: temporary or permanent seeding, mulching, geotextiles, sodding, vegetative buffer strips, protection of trees and preservation of mature vegetation. Structural erosion and sediment control BMP's that may be used include: straw bale dikes, silt fences, earth dikes, brush barriers, drainage swales, check dams, subsurface drain, pipe slope drain, level spreaders, storm drain inlet protection, outlet protection, sediment traps, and temporary sediment basins. Detention ponds may also be used as temporary sediment basins. Additional BMP's that may need to be implemented include: providing protected storage areas for chemicals, paints, solvents, fertilizers, and other potentially toxic materials. Providing waste receptacles at convenient locations and providing regular collection of wastes, including building material wastes. Minimizing off–site tracking of sediments. Making adequate preparations, including training and equipment to contain spills of oil and hazardous materials. Complying with applicable state or local waste disposal, sanitary sewer or septic system regulations and the use of appropriate pollution prevention measures for allowable non–storm water components of discharge.

E. Notify Heidt Design L.L.C. and the developer in writing of any non–storm water pollution sources which are being stored, or otherwise used during the construction of the project, i.e., fertilizers, fuels, pesticides, other chemicals. This notification should be accompanied with the contractor's design and methods to prevent pollution run–off from these sources.

F. Develop a maintenance and inspection plan which includes, but is not limited to the following:

  A. The specific areas to be inspected and maintained that includes all the disturbed areas and material storage areas of the site.

  B. The erosion and sediment controls identified in the SWPPP to be maintained and inspected and those additional controls that the contractor deems necessary.

  C. Maintenance procedures.

  D. The procedure to follow if additional work is required or whom to call.

  E. Inspections and maintenance forms.

  F. The personnel assigned to each task.

  The following shall be inspected a minimum of once a week or within 24 hours after 0.25 inches of rainfall:

    Stabilization measures (once a month if fully stabilized).

    Structural controls.

    Discharge points.

    Construction entrances and exits.

    Areas used for storage of exposed materials.

  An inspection form shall be completed for each inspection. Any permit violations should be noted and corrective measures to be taken shall be noted. If revisions to the SWPPP are needed, a report form for changes in the SWPPP shall be completed and a copy sent to Heidt Design L.L.C. The original shall be kept on–site as documentation of the change. If the inspection passes, a certification that the facility is in compliance with the SWPPP and the NPDES permit must be signed by one of the following:

    The principal executive officer or ranking elected official of the operator of the SWPPP.

    A duly authorized representative of the principal executive official of the operator of the SWPPP.

  If required, storm water discharge samples are to be taken at the locations specified by the engineer of record. The sampling should be performed according to the following criteria:

  A grab bag sample will be taken during regular workings hours, once per month, within the first 30 minutes of a qualifying event (a rain event at 0.5 inches or greater in a 24 hour period) or within the first 30 minutes of the beginning of the discharge of a previously collected qualifying event for settable solids, total suspended solids, turbidity flow. This data is to be recorded and submitted to EPA once per month.

  Retain inspection reports and certifications for at least three years.

G. Initiate site stabilization measures no more than 14 days after construction activities have temporarily or permanently ceased on any major portion of the site except when construction will resume within 21 days.

H. Notify Heidt when it is time to submit a Notice of Termination as defined under Part E of the Heidt Design L.L.C. section of the SWPPP. Sign and return to Heidt the Notice of Termination form and certification.

Developer

A. Notify Heidt of your intent to commence construction. Sign the Notice of Intent form as operator of the storm water discharge facility and permittee and return to Heidt Design L.L.C.. Copy Heidt Design L.L.C. on the NOI Permit when it is received.

B. Sign a Certification of Storm Water Pollution Prevention Plan and return to Heidt Design L.L.C..

C. Notify Heidt when it is time to submit a Notice of Termination as defined under Part E of the Heidt Design L.L.C. section of the SWPPP. Sign and return to Heidt Design L.L.C. for submittal to EPA a Notice of Termination form and certification.

PRE–DEVELOPED SITE INFORMATION:

1. Total site acreage: 75.15
2. Land use: Improved Pasture and Forrested Wetlands
3. Vegetation: Pasture & Wetlands
4. Receiving waters or municipal separate storm water system: Five Mile Creek
5. 2 Year/24 Hour rainfall depth: 4.5 in./hr.
6. Soil types: Myakka, Sellers, Basinger, Smyrra, Samsula, Zolfo, Tavares.
7. Endangered species: N/A

PROJECT INFORMATION:

1. Project type: Residential
2. Anticipated construction sequence is as follows:
   1. Complete erosion control installation
   2. Clearing and grubbing
   3. Earthwork activities
   4. Storm water system construction
   5. Utility construction
   6. Base and pavement construction
   7. Final stabilization

   The BMP's listed in Part D of the Contractor section of the SWPPP shall be considered during all phases of construction.
3. Anticipated start date: January 2008
4. Anticipated completion date: January 2009
5. Total acres disturbed: 63.0
6. Pre–developed "C" factor: 0.2
7. Post–developed "C" factor: 0.45
8. The storm water management system, upon completion of construction and appropriate certification and as–built submittals will be operated and maintained by Connertion West C.D.D.
9. The potential source of pollution from this project is on–site development and construction activity.
10. Does the project discharge into a water body listed on the 1998 EPA approved 303 (d) list for water segments which are impaired due to total suspended solids? ____ Yes _X__ No If so, sampling is required as follows:____.

GENERAL EROSION AND TURBIDITY CONTROL NOTES

1. The Site Subcontractor shall be responsible for installation and maintenance of all erosion and turbidity controls and the quality and quantity of offsite or wetland discharges.
2. Prior to construction, the Site Subcontractor is responsible for having his dewatering plan and turbidity control plan approved by the applicable reviewing agencies. Refer to the project's permit approvals and permit conditions for agencies requiring such review and approval. Questions concerning appropriate techniques should be addressed to those agencies and/or discussed with the project engineer and owner.
3. The appropriate turbidity and erosion control methodologies selected by the Site Subcontractor for this project should be made following assessment of the plans and project site specific factors and after consultations as needed with the project engineer and appropriate agencies. The Site Subcontractor will be responsible for obtaining any and all necessary permits for such activity; several factors to consider are listed below:
   A. Clay content in excavated materials and/or permeabilities rates
   B. Depth of cut in ponds, trenches, or utility lines
   C. Ambient ground water levels
   D. Actual rainfall amounts and time of year relative to normal rainy season
   E. Proximity to wetlands, water bodies or offsite properties
   F. 'Class' designation of receiving water bodies (i.e., Outstanding Florida Waters, shellfish harvesting areas, etc.)
   G. Density, type, and proximity of upland vegetation to be retained during construction (for use as possible filtration areas)
   H. Fill height relative to natural grade and length and steepness of the proposed slopes
   I. Existing topography and directions of surface flow
   J. Type of equipment used
   K. Project type
   L. Duration of construction activities
   M. Separation distance of onsite ponds
   N. Ambient quality of surface and groundwater
   O. Temporary stockpile locations and heights
4. At the onset of construction, the Site Subcontractor, as the party responsible for implementation of the erosion and sediment control plan, shall assess the above described conditions and factors with respect to relative cost effectiveness and select the appropriate methods of protection. A fairly extensive list of techniques are presented below but it must be stressed that any or all of the following may be necessary to maintain water quality and quantity standards. The construction sequencing should be thought out in advance of initiation to provide adequate protection of water quality.
5. Discharges which exceed 29 N.T.U.'s over the background levels are in violation of state water quality standards. Discharges of water quantities which affect offsite properties or may damage wetlands are also prohibited by regulating agencies.
6. The erosion and turbidity control measures shown hereon are the minimum required for agency approval. Additional control and measures may be required due to the Site Subcontractor's construction sequence & unforeseen weather conditions. Any additional measures deemed necessary by the Site Subcontractor shall be included in the lump sum bid with no extras for materials and labor allowed.
7. Hay bales or silt screens shall be installed prior to land clearing to protect water quality and to identify areas to be protected from clearing activities and maintained for the duration of the project until all soil is stabilized.
8. Floating turbidity barriers shall be in place in flowing systems or in open water lake edges prior to initiation of earthwork and maintained for the duration of the project until all soil is stabilized.
9. No clay material shall be left exposed in any stormwater storage facility. If clay or sandy–clays are encountered during stormwater storage excavation, the Site Subcontractor shall notify the Engineer immediately before proceeding with further excavation. If the Engineer of Record has determined that such soils are non–confining and must be excavated to meet permit and design conditions, excavation may proceed after obtaining written authorization from the appropriate governing agency (e.g. the Environmental Protection Commission of Hillsborough County (EPCHC) in Hillsborough County).
   If said soils are left exposed at the permitted and designed depth, the Site Subcontractor shall over–excavate the pond's bottom and side slopes by a minimum of twelve (12") inches and backfill with clean sands to help prevent suspension of fine particles in the water column.
10. The installation of temporary erosion control barriers shall be coordinated with the construction of the permanent erosion control features to the extent necessary to assure effective and continuous control of erosion and water pollution throughout the life of the construction phase.
11. The type of erosion control barriers used shall be governed by the nature of the construction operation and soil type that will be exposed. Silty and clayey material may require solid sediment barriers to prevent turbid water discharge, while sandy material may need only silt screens or hay bales to prevent erosion. Floating turbidity curtains should generally be used in open water situations. Diversion ditches or swales may be required to prevent turbid stormwater runoff from being discharged to wetlands or other water bodies. It may be necessary to employ a combination of barriers, ditches, and other erosion/turbidity control measures if conditions warrant.
12. Where pumps are to be used to remove turbid waters from construction areas, the water shall be treated prior to discharge to the wetlands. Treatment methods include, for example, turbid water being pumped into grassed swales or appropriate upland vegetated areas (other than upland preservation areas and wetland buffers), sediment basins, or confined by an appropriate enclosure such as turbidity barriers or low berms, and kept confined until turbidity levels meet State Water Quality Standards.
13. The Permittee shall schedule his operations such that the area of unprotected erodible earth exposed at any one time is not larger than the minimum area necessary for efficient construction operation, and the duration of exposed, uncompleted construction to the elements shall be as short as practicable. Clearing and grubbing shall be so scheduled and performed such that grading operations can follow immediately thereafter. Grading operations shall be so scheduled and performed that permanent erosion control features can follow immediately thereafter if conditions on the project permit.
14. Water derived from various dewatering methods should be passed through sufficiently wide areas of existing upland vegetation to filter out excess turbidity. If this is not sufficient, the water shall be retained in previously constructed permanent stormwater ponds or else retained in temporary sedimentation basins until the clarity is suitable to allow for its discharge. Plugging the outfalls from completed stormwater ponds may be needed to avoid discharge. However, such situations should be monitored closely to preclude berm failure if water levels rise too high.
15. Water can be transported around the site by the use of internal swales or by pumps and pipes.
16. Sheet flow of newly filled or scraped areas may be controlled or contained by the use of brush barriers, diversion swales, interceptor ditches or low berms. Flow should be directed toward areas where sediments can sufficiently settle out.
17. Exposed soils shall be stabilized as soon as possible, especially slopes leading to wetlands. Stabilization methods include solid sod, seeding and mulching or hydromulching to provide a temporary or permanent grass cover mulch blankets, filter fabrics, etc., can be employed to provide vegetative cover.
18. Energy dissipaters (such as rip rap, a gravel bed, hay bales, etc.) shall be installed at the discharge point of pipes or swales if scouring is observed.
19. Attempt to install roadway curb and gutters as soon as possible to reduce the surface area for erosion to occur.
20. Implement storm drain inlet protection (hay bales or gravel) to limit sedimentation within the stormwater system. Perform inspections and periodic cleaning of sediments which wash out into the streets until all soil is stabilized.
21. Water discharge velocities from impounded areas and temporary sedimentation basins shall be restricted to avoid scouring in receiving areas.
22. If water clarity does not reduce to state standards rapidly enough in holding ponds, it may be possible to use chemical agents such as alum to flocculate or coagulate the sediment particles.
23. Hay bales, silt screens, or gravel beds can be added around the pipe or swale discharge points to help clarify discharges. Spreader swales may help dissipate cloudy water prior to contact with wetlands.
24. All fuel storage areas or other hazardous storage areas shall conform to accepted state or federal criteria for such containment areas.
25. Vehicle or equipment washdown areas will be sufficiently removed from wetlands or offsite areas.
26. Fugitive dust controls (primarily by using water spray trucks) shall be employed as needed to control windborn emissions.
27. If the above controls remain ineffective in precluding release of turbid water, especially during pond or utility line dewatering, then the contractor may be compelled to use a vertical dewatering system such as well points or sock drains to withdraw groundwater which may already be clear enough to allow for direct discharge to wetlands.
28. Ongoing inspections and periodic maintenance by the Site Subcontractor shall occur throughout construction as necessary to insure the above methods are working suitably. This may be needed daily, if conditions so warrant. Site Subcontractors are encouraged to obtain and thoroughly review The Florida Development Manual: A Guide to Sound Land and Water Management, which was developed by the State of Florida Department of Environmental Protection in 1988. This provides fairly in–depth discussions of recommended techniques and also provides specific design and technical standards. A copy of this document is available for review at Heidt Design L.L.C..
29. The contractor will perform daily inspections of all on–site wetlands within the construction area to ensure that water levels within those wetlands are not excessively impounded prior to the time when the permitted control structure or outfall is built. Water levels significantly above normal should be corrected at a frequency that prevents a change in the vegetative character or health of any wetlands.

APPLICANT NAME __________

APPLICANT SIGNATURE __________

DATE	DESCRIPTION	BY
06–19–14	REVISE TITLE BLOCK & OWNER INFO	SDM

REVISIONS

Engineering Business Certificate of Authorization No. 28782
Landscape Architecture Certificate of Authorization No. LC26000405
HEIDT DESIGN
5806-B Breckenridge Parkway
Tampa, Florida 33610
Office: 813-253-5311
Fax: 813-464-7629
www.HeidtDesign.com

DATE:
EDWIN J. ROGERS P.E. NO. 50082
FLORIDA PROFESSIONAL ENGINEER

CONSTRUCTION SURFACE WATER MANAGEMENT PLAN

JOB NO. CNT–CT–025	CONNERTON VILLAGE TWO PARCEL 213
DESIGN WERTZ	
DRAWN MIDDLETON	PREPARED FOR: HAYMAN WOODS, L.L.C.
DATE 5–14–2007	Elevations based on National Geodetic Vertical Datum 1929 (NGVD 29) Conversion from NGVD 29 to NAVD 88 = –0.85 Feet
FILE CSWMP2	SHEET 2 OF 2 SHEETS

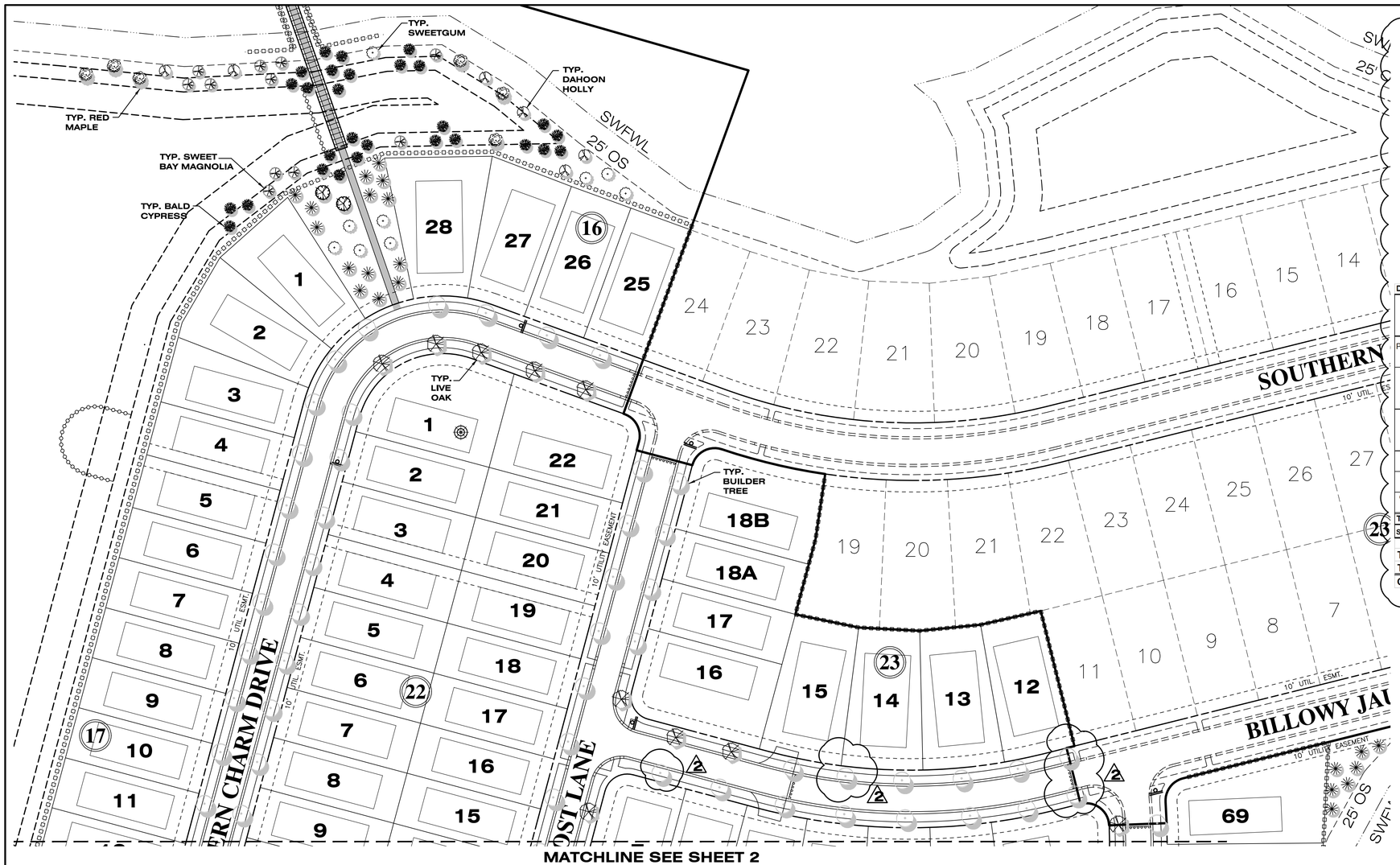

BUILDER REQUIRED \ PROVIDED TREES (Based on Lot Size)

Site	Number of Lots	Number of Trees Required by Code per lot	Total Trees Required (2" CAL)	Total Inches of Trees Required	Number of Trees Provided per lot	Total Trees Provided	Total Inches of Trees Provided (Inches)
Townhomes	0	1	0	0	1	0	0
3500-6000	150	2	300	600	2	401	750
6001-7500	17	3	51	102	3	51	132
7501-9500	4	4	16	32	4	16	30
9501-16000	0	6	0	0	6	0	0
16001 +	0	8	0	0	8	0	0
Street Trees		0	0	0		0	0
Totals	**171**		**367**	**734**		**468**	**+ 912**

*** 1 TREE PER LOT HAS BEEN DESIGNATED A STREET TREE WITH AN INCREASED SIZE (3"CAL) TO COMPENSATE FOR TREE REPLACEMENT INCHES.**

DEVELOPER REQUIRED \ PROVIDED TREES & LANDSCAPE

DEVELOPER REQUIRED / PROVIDED TREES & LANDSCAPE

Site	Buffer Type	Total Linear Feet of Buffer	Total Shrubs Required	Total Trees Required	Diameter of Trees Required (Inches)	Total Inches of Trees Required	Total Trees Provided	Diameter of Trees Provided (Inches)	Total Inches of Trees Provided
POND BUFFER (1 tree/50 LF)	Water Management Area	0	0	0	2	0	0	2	0
ADJACENT USE ROW BUFFER (1 tree/30 LF)	Type "D" Buffer	0	0	0	2	0	0	2	0
PARK SITE TREES	N\A	0	0	0	2	0	13	3	39
PARK SITE TREES	N\A	0	0	0	2	0	13	2	26
EXTRA LOT TREES	N\A	0	0	0	2	0	56	3	168
OPENSPACE TREES	N\A	0	0	0	2	0	86	2	172
Totals		**0**	**0**	**0**		**0**	**168**		**405**
SUBTOTAL INCHES TO BE USED FOR TREE REPLACEMENT CREDIT									**583**
TOTAL INCHES REQUIRED									**1317**
TOTAL INCHES PROVIDED									**1317**
CREDIT									**0**

2

REPLACEMENT INCHES = 583

PASCO COUNTY STANDARD SITE NOTES:

1. All utility construction shall comply with the Pasco County Standards for Design and Construction of Water and Wastewater Facilities Specifications, latest edition.
2. All on-site water and sewer facilities shall be owned and maintained by the owner-developer.
3. Installation of fuel storage tanks requires review and approval by the Fire Marshal and the issuance of a separate building permit. Approval of the site plan does not constitute approval of the location of the fuel tanks.
4. All proposed signs must be applied for, approved, and permitted on an individual basis apart from any ultimately-approved site plan. Approval of this site plan does not constitute approval of any signage.
5. Handicap parking spaces will be properly signed and striped in accordance with Florida Statute 316, the Manual on Uniform Traffic Control Devices, or other applicable standards.
6. The architect/engineer certifies that the site has been designed in accordance with the Americans with Disabilities Act.
7. All on-site parking spaces will be striped and signed in accordance with the Manual on Uniform Traffic Control Devices, latest edition. Parking spaces, directional arrows, and stop bars shall be striped in WHITE. It shall be the owner/developers' responsibility to properly sign and stripe the site in accordance with applicable standards.
8. The owner/developer acknowledges that this approval does not include any work in County right-of-way. All right of way work shall be a function of an approved Pasco County Right-of-Way Use Permit.
9. **All clear-site areas shall be kept free of any signage, plantings, trees,** etc. in excess of three-and-a-half (3-1/2) feet in height.
10. No irrigation system or landscaping shall be installed in any County or State right-of-way without issuance of appropriate Right-of-Way Use Permit.
11. The owner/developer acknowledges that the site and its subsequent building permits shall comply with all rezoning/MPUD/PUD conditions. All structures, including buffer walls, retaining walls, signage, etc. require separate building permits.

LANDSCAPE NOTES:

1. ALL PLANTS SHALL BE FLORIDA GRADE #1 OR BETTER.
2. APPLY A 3" LAYER OF MULCH LAYER TO ALL PROPOSED TREE, SHRUB, GROUND COVER AND VINE PLANTINGS.
3. ALL REQUIRED TREES TO BE PLANTED SHALL BE A MINIMUM OF 4" CALIPER OR LARGER. MULTI-TRUNK TREES SHALL BE A MINIMUM OF THREE (3) TRUNKS (1" PER TRUNK).
4. NO REFERENCE TO ENGINEERING SHOULD BE MADE FROM THIS SHEET. FOR LANDSCAPE REFERENCE ONLY.
5. ANY DEVIATION FROM PLANT QUANTITY, SIZE OR GRADE MAY JEOPARDIZE THE CERTIFICATE OF OCCUPANCY. ADDITIONAL PLANTS MAY BE ADDED, BUT MUST COMPLY WITH PASCO COUNTY REQUIREMENTS.
6. LANDSCAPE PLAN MUST DESIGNATE THE PERSON OR ENTITY RESPONSIBLE FOR MAINTENANCE OF TREES.
7. ALL TREES MUST BE GUARANTEED FOR A PERIOD OF ONE YEAR FROM THE DATE OF INSPECTION.
8. FOR EVERY FIVE TREES REQUIRED THERE SHALL BE A MINIMUM OF ONE SPECIES PROVIDED, UP TO A MAX. OF EIGHT SPECIES WHEN 40 OR MORE TREES ARE REQUIRED.
9. AN UNDERGROUND IRRIGATION SYSTEM SHALL BE INSTALLED FOR ALL REQUIRED LANDSCAPING.
10. IRRIGATION SHALL BE DESIGNED TO COMPLY WITH SECTION LDC 603 OF LANDSCAPING & IRRIGATION ORDINANCE.

STANDARD NOTES:

1. PERSON OR ENTITY RESPONSIBLE FOR MAINTENANCE OF TREES: CONNERTON L.L.C.
2. THIS IS A "PERMIT LANDSCAPE PLAN" AND WAS PREPARED TO MEET MINIMUM PASCO COUNTY TREE PLANTING REQUIREMENTS.

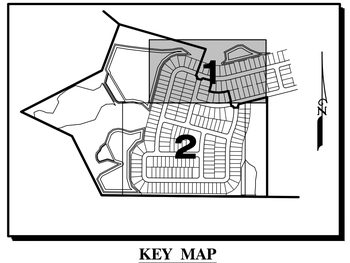

KEY MAP
N.T.S.

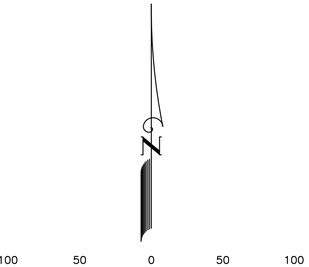

SCALE: 1" = 50'

PLANT LIST

Qty.	native	DT	Code	Botanical Name	Common Name	Caliper	Height	Spread	Container	Comments	Spacing
				Trees							
6	yes	yes	AR	Acer rubrum	Red Maple	2"	8'-10'	5'-6'	30 Gal		As Shown
11	yes	yes	MV	Magnolia virginiana	Sweet Bay Magnolia	2"	8'-10'	5'-6'	30 Gal		As Shown
6	yes	yes	MG	Magnolia grandiflora	Magnolia	2"	8'-10'	5'-6'	30 Gal		As Shown
33	yes	yes	PP	Pinus palustris	Long Leaf Pine	2"	8'-10'	5'-6'	30 Gal		As Shown
6	yes	yes	IC	Ilex cassine	Dahoon Holly	2"	8'-10'	5'-6'	30 Gal		As Shown
9	yes	yes	LO	Liquidambar orientalis	Oriental Sweetgum	2"	8'-10'	5'-6'	30 Gal		As Shown
70	yes	yes	QV3	Quercus virginiana	Live Oak	3"	8'-10'	5'-6'	45 Gal	6' ct. min., main central leader	As Shown
28	yes	yes	TD	Taxodium distichum	Bald Cypress	2"	8'-10'	5'-6'	30 Gal		As Shown

*Roots plus trees may be substituted for container grown trees.

BUILDERS STREET TREE - LIVE OAK - 3" CAL

NOTES:

TREE REMOVAL WAS PREVIOUSLY PERMITTED & APPROVED BY PASCO COUNTY.

HEIDT & ASSOCIATES PLANS REFLECT THE PREVIOUS TREE REPLACEMENT INCHES (583).

BUILDER/DEVELOPER PROPOSED TREES (SIZES) HAVE BEEN INCREASED TO COMPENSATE FOR FOR THE EXISTING TREES REMOVED IN ACCORDANCE WITH PASCO COUNTY REGULATIONS.

DATE	DESCRIPTION	BY
7-15-15	PERMIT LANDSCAPE MODIFICATION	RER
06-19-14	REVISE TITLE BLOCK & OWNER INFO	SDM

REVISIONS

Engineering Business Certificate of Authorization No. 28782
Landscape Architecture Certificate of Authorization No. LC26000405

HEIDT DESIGN

5806-B Breckenridge Parkway
Tampa, Florida 33610
Office: 813-253-5311
Fax: 813-464-7629
www.HeidtDesign.com

DATE:

SCOTT E. ANDREASEN L.A. 0001658
FLORIDA REGISTERED LANDSCAPE ARCHITECT

PERMIT LANDSCAPE PLAN

JOB NO.	HWL-CT-1070
DESIGN	HARNETT
DRAWN	HARNETT
DATE	5-16-07
FILE	PLPMAS

CONNERTON VILLAGE 2 PHASE 213

PREPARED FOR: **HAYMAN WOODS, L.L.C.**

Elevations based on North American Vertical Datum 1988 (NAVD 88)
Conversion from NAVD 29 to NGVD 88 = -0.85 Feet

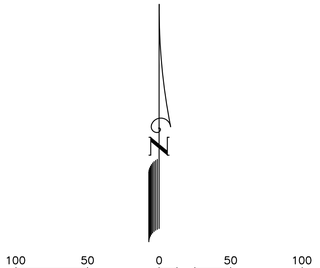

SCALE: 1" = 50'

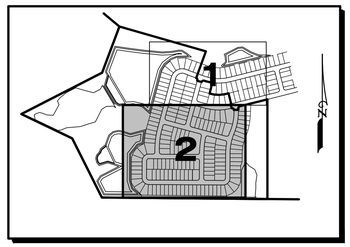

KEY MAP
N.T.S.

BUFFER SPECIFICATIONS:

"A" 10' wide buffer w/single row trees spaced max. 30' on center and continuous row of evergreen shrubs w/min. height of 24" at installation planted 24" o.c.
"B" 15' wide buffer w/single row trees w/max. spacing 30' on center. A visual screen to be eighty percent (80%) opaque within one year, min. 6' ht. at installation shall also be provided within buffer. Screen may include opaque fence, wall, hedge, berm or any combination thereof. Wooden fences prohibited. Walls/fences max. 8' ht. Shrubs used for visual screen shall be spaced max. 5' on center.
"C" 20' wide buffer w/two staggered rows of trees w/max. spacing 30' o.c. ea. row. Visual screen to be 80% opaque within one year, min. 6' ht. at installation, shall be provided within the buffer. Screen may include opaque fence, wall, hedge, berm or any combination thereof. Wooden fences prohibited. Walls/fences max. 8' ht. Shrubs used for visual screen spaced max. 5' on center.
"D" See Landscape Ordinance for requirements.

WATER MANAGEMENT AREAS:

Retention areas visible from the road, or located within required buffering (max. 70% intrusion into buffer width), must be offset with one tree ea. 50 l.f. of pond and meandered.

LANDSCAPING SPECIFICATIONS:

Sizes required at installation: Shade trees: 2" cal/10'ht.; Shrubs 24" ht., 24" o.c.
No more than 30% of the required landscaped area may be grassed (Sect. 10)
No plantings over 3-1/2' ht. in the 20' clear-site areas.
Palm trees count as 3 to 1; i.e., 3 palms = 1 shade tree
Maximum 50% plant materials, other than trees, may be non-drought tolerant. Native plant material as follows: 2003 - 20% native plants; 2004 - 30% native plant materials. For every 5 trees required, there shall be minimum one species provided, up to a minimum of eight species when forty or more trees are required (Sect. 602.7.B.1.d.-Tree Ord.)
No one plant species of shrubs or groundcover, excluding turf grass, shall constitute more than twenty-five (25) percent of any landscape plan (Sect. 6.C.11, L&I0)
Berm height is measured from the vehicular use area grade.
Irrigation designed per requirements of Sect. 15.C.L&I0
Mulch and gravel specifications - LDC 603.

REVISIONS		
DATE	DESCRIPTION	BY
2 7-15-15	PERMIT LANDSCAPE MODIFICATION	RER
06-19-14	REVISE TITLE BLOCK & OWNER INFO	SDM

Engineering Business Certificate of Authorization No. 28782
Landscape Architecture Certificate of Authorization No. LC26000405
HEIDT DESIGN
5806-B Breckenridge Parkway
Tampa, Florida 33610
Office: 813-253-5311
Fax: 813-464-7629
www.HeidtDesign.com

DATE:
SCOTT E. ANDREASEN L.A. 0001658
FLORIDA REGISTERED LANDSCAPE ARCHITECT

PERMIT LANDSCAPE PLAN

JOB NO. HWL-CT-1070	**CONNERTON VILLAGE 2 PHASE 213**
DESIGN HARNETT	
DRAWN HARNETT	PREPARED FOR: **HAYMAN WOODS, L.L.C.**
DATE 5-16-07	Elevations based on North American Vertical Datum 1988 (NAVD 88) Conversion from NAVD 29 to NGVD 88 = -0.85 Feet
FILE PLPMAS	**SHEET 2 OF 2 SHEETS**