PASCO COUNTY, FLORIDA

"Bringing Opportunities Home"

WEST PASCO GOVERNMENT CENTER
PLANNING AND DEVELOPMENT DEPARTMENT
8731 CITIZENS DRIVE, SUITE 230
NEW PORT RICHEY, FL 34654
TELEPHONE: (727) 847-8142
FAX: (727) 815-7000
pshaw@pascocountyfl.net

Memorandum No. PDD16-154

October 21, 2015

Joe Cimino, P.E.
Water Resource Associates
4260 West Linebaugh Avenue
Tampa, FL 33624

RE: Cypress Creek Town Center North Infrastructure Improvements (2PR09-029)
Preliminary/Constructions Site Plan Non-Substantial Modification

Dear Mr. Cimino:

Please be advised that on October 21, 2015, the Planning and Development Department, reviewed and **approved** the above-referenced amendment. This approval is issued under the provisions of Section 300, Development Review Procedures, of the Pasco County Land Development Code.

The approval is for the modification of the following:

1. The public lift station was moved to the northeast of Roundabout #3. This change required a reconfiguration of the storm sewer system leading to Pond A that is documented in the updated Storm Tabs and on the updated plans. The change also required that an additional portion of the existing ditch be filled which is shown in the updated grading plans. Access to the lift station was coordinated with Amanda Boone, and conceptually approved by the Utility Department as shown in the email documentation provided in Attachment B.

2. The eastern ditch conveying stormwater discharge to Wetland A that was previously approved has been removed, and replaced with a reconfigured storm pipe network. The reconfiguration is detailed on the updated plans, and the drainage calculation have been updated in the revised Strom Tabs provided with this application.

3. The revisions total approximately 4 acres of plan changes.

The developer acknowledges that any provisions of Pasco County ordinances and any rezoning, development order, development agreement, Master Roadway Phasing Plan, or Pedestrian and

Bike Plan conditions of approval not specifically waived shall be in full force and effect, including all impact fee ordinances.

The developer acknowledges that any provisions of ZN10-137 and any subsequent amendments' conditions of approval not specifically waived shall be in full force and effect.

The owner/developer is hereby notified that no activity shall commence on-site until the completed notarized acknowledgment portion of this document are received by the Planning and Development Department.

The submitted plan does not show a curb ramp in the sidewalk connection at Marshbend Way and SR 56. Based on the engineer's submitted response, the Florida Department of Transportation (FDOT) will be making the connection and providing the necessary truncated domes. The developer acknowledges that the work within the S.R. 56 right of way shall be coordinated with FDOT and the truncated domes shall be in place prior to acceptance.

The owner/developer acknowledges that at the time of vertical construction within the development, additional sidewalks shall be required along with physical barriers at the roundabout to prevent pedestrians' unsafe crossings at the roundabouts.

The owner/developer acknowledges that he shall be responsible for construction of the access improvements to S.R. 56, S.R. 54 and C.R. 54 for the project prior to or concurrent with vertical construction of the portions of the project necessitating such improvements, as determined by the County and FDOT at the time of preliminary site plan approval and/or at the time of issuance of access permits for the project. All access improvements, number of access points and spacing of access points shown on Map H shall be subject to compliance with the provisions of the Florida Department of Transportation (FDOT) and Pasco County's access management regulations.

The owner's/developer's acceptance of the above conditions constitutes a notice of authorization to perform all related work as allowed by Section 300, Development Review Procedures, of the Land Development Code, but **shall not** include the structure, septic tanks, signs, construction within County/State right-of-way**,** and all other construction activities requiring separate governmental permits. Should the owner/developer object to any condition of approval as stated herein, a written notice of appeal shall be submitted within 30 days of this decision in accordance with Section 407.1, Appeals, of the Pasco County Land Development Code. The owner/developer may contact this office for information regarding corresponding application and fee requirements.

Any person failing to implement or carry out developments in accordance with all applicable requirements, conditions, or approved plans shall be subject to penalties as stated in the Development Review Procedures.

By issuance of this permit, Pasco County, its employees, and representatives, assume no responsibility and/or liability in regard to the design, construction, or performance of the permitted facilities.

Should you have any questions, please feel free to contact this office.

Sincerely,

Pamela S. Shaw

Pamela Shaw
Planner I

DEVELOPER'S ACKNOWLEDGMENT:

The developer acknowledges that it has read, understood, and accepted the above-listed conditions of approval.

_____ _____
Date Signature

_____
Print Name

_____
Title

STATE OF FLORIDA
COUNTY OF _____

The foregoing instrument was acknowledged before me this _____

(date), by _____ (name of

corporation acknowledging) a _____ (State

or place of incorporation) corporation, on behalf of the corporation. He/she is personally known to

me or who has produced _____ (type of identification) as

identification.

Seal: _____
NOTARY

DEVELOPMENT PLANS FOR
CYPRESS CREEK TOWN CENTER NORTH
INFRASTRUCTURE IMPROVEMENTS

STR: 27-26S-19E, PASCO COUNTY FLORIDA
PARCEL ID: 27-26-19-0010-0000-0010; 27-26-19-0010-0000-0012

PREPARED FOR:
Pasco Ranch Inc.
509 Guisando De Avila, Suite 200
Tampa, Florida 33613
(813) 963-5856
msierra@Sierra-Properties.com

ISSUED FOR:
Pasco County Resubmittal
09-22-2015

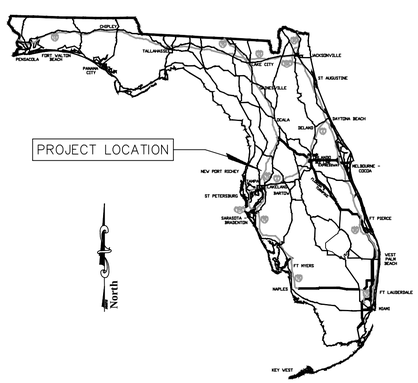

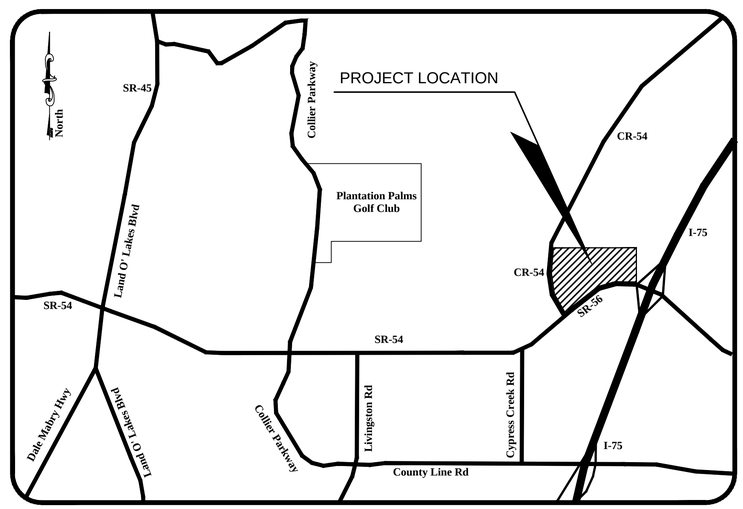

VICINITY MAP

FDOT DRAINAGE	CONSTRUCTION	FDPE UTILITIES	SWFWMD ERP	PASCO COUNTY	DRAWING INDEX	
					SHEET	DESCRIPTION
*		*	*	*	G-100	COVER SHEET
*		*	*	*	G-101	GENERAL NOTES
*		*	*	*	G-102	EXISTING CONDITIONS
*		*	*	*	G-103	BORING LOCATION MAP
*		*	*	*	C-100	GENERAL SITE PLAN
		*	*	*	C-101	OVERALL HORIZONTAL CONTROL PLAN
		*	*	*	C-102 - C104	HORIZONTAL CONTROL PLANS
			*	*	C-105 - C-107	TYPICAL ROADWAY SECTIONS
				*	C-200	OVERALL SIGNING AND PAVEMENT MARKING PLAN
				*	C-201 - C-206	SIGNING AND PAVEMENT MARKING PLANS
*		*	*	*	C-300	OVERALL PAVING, GRADING AND DRAINAGE PLAN
*		*	*	*	C-301 - C-304	PAVING, GRADING AND DRAINAGE PLANS
*			*	*	C-305	ROADWAY DETAILS
*			*	*	C-306 - C-307	DRAINAGE DETAILS
*			*	*	C-400	OVERALL EROSION CONTROL PLAN
*			*	*	C-401 - C-402	EROSION CONTROL DETAILS
			*	*	C-403	SWPPP NOTES
		*		*	C-500	OVERALL WATER AND SEWER PLAN
		*		*	C-501 - C-506	WATER AND SEWER PLANS
		*		*	C-507	WATER AND SEWER DETAILS
		*		*	C-508 - C-509	LIFT STATION DETAILS
		*		*	C-510	NORTH UTILITY CONNECTIONS
*		*	*	*	C-600	ROADWAY PLAN AND PROFILE KEY MAP
*		*	*	*	C-601 - C-611	ROADWAY PLAN AND PROFILES
*		*	*	*	C-612	STORM EXTENSION PLAN AND PROFILES
		*		*	C-613 - C-618	WATERMAIN AT RIGHT OF WAY PLAN AND PROFILES
*			*	*	C-700	FEMA FLOOD ZONE MAP
			*	*	L-100-L-503	LANDSCAPE PLANS

CALL 48 HOURS BEFORE YOU DIG
811.
IT'S THE LAW! DIAL 811
Know what's below. Call before you dig.
SUNSHINE STATE ONE CALL OF FLORIDA, INC.

PREPARED BY

Engineering ~ Environmental
Water Resource
4260 W. Linebaugh Avenue
Tampa, Florida 33624
Phone: 813.265.3130 Fax: 813.265.6610
www.wraengineering.com

ENGINEER'S CERTIFICATION

I HEREBY CERTIFY THAT THE DESIGN OF THIS PROJECT, AS PREPARED UNDER MY PERSONAL DIRECTION AND CONTROL, COMPLIES WITH ALL APPLICABLE STANDARDS, INCLUDING THE "MANUAL OF UNIFORM MINIMUM STANDARDS FOR DESIGN, CONSTRUCTION AND MAINTENANCE FOR STREETS AND HIGHWAYS" AS ADOPTED BY THE FLORIDA DEPARTMENT OF TRANSPORTATION PURSUANT TO 334.044(10)(a) AND 336.045, FLORIDA STATUTE.

REVISIONS

NO.	DATE	DESCRIPTION	BY
1.	02-02-15	Revisions Per County Comments	ELR
2.	03-03-15	SWFWMD Resubmittal	ELR
3.	03-08-15	Access connection and Sidewalk	JAC
4.	06-05-15	County Resubmittal	ELR
5.	09-22-15	County Resubmittal - Address Comments Mod 1	ELR
6.			
7.			
8.			
9.			

Engineering ~ Planning
Environmental Science
4260 West Linebaugh Avenue
Tampa, Florida 33624
Phone: 813.265.3130 Fax: 813.265.6610
www.wraengineering.com CA 00007652

DRAWING
COVER SHEET
DESIGNED: JAC DRAWN: ELR APPROVED: JAC

PROJECT
CYPRESS CREEK
TOWN CENTER NORTH
JOB #: 0967 DATUM: NGVD 1929

JOSEPH A. CIMINO
FL. P.E. # 67540

Original Date: 07-14-14
Sheet
G-001

2012 Water Resource Associates, Inc. Plot Date: 9/23/2015 11:49:40 AM CAD File Name: S:\--PROJECT FILES\0967 - PASCO 54 INC. - CCTC NORTHCADD\PLANS\G-100_COVER_SHEET.DWG

GENERAL CONSTRUCTION NOTES

1. UNLESS OTHERWISE NOTED HEREIN, THESE PLANS HAVE BEEN PREPARED IN ACCORDANCE WITH THE FOLLOWING DOCUMENTS:
A. PASCO COUNTY LAND DEVELOPMENT CODE (JAN 31, 2012)
B. CURRENT WATER AND WASTEWATER STANDARDS OF PASCO COUNTY. THE WATER AND WASTEWATER SYSTEMS SHALL BE DEDICATED TO PASCO COUNTY FOR OWNERSHIP AND MAINTENANCE.
C. THE STORMWATER DRAINAGE COLLECTION SYSTEM AND PROPOSED ROADWAY SHALL MEET PASCO COUNTY CURRENT SPECIFICATION FOR DESIGN. WHERE INDICATED ON THE PLANS, THE RIGHT-OF-WAY SHALL BE DEDICATED TO THE COUNTY FOR OWNERSHIP AND MAINTENANCE. ACCORDINGLY, THE ABOVE NOTED DOCUMENTS SHALL BE THE TECHNICAL SPECIFICATIONS FOR THE CONSTRUCTION OF THIS PROJECT AND THE CONTRACTOR SHALL OBTAIN AND FULLY FAMILIARIZE HIMSELF WITH THE CONTENTS OF SAID SPECIFICATIONS. IN THE EVENT THAT A DISCREPANCY OCCURS BETWEEN THESE PLANS AND THE AFOREMENTIONED SPECIFICATIONS, THE SPECIFICATIONS SHALL TAKE PRECEDENCE, UNLESS OTHERWISE DIRECTED BY THE ENGINEER IN WRITING. THE CONTRACTOR SHALL HAVE A SET OF THESE PLANS MARKED "APPROVED FOR CONSTRUCTION" ALONG WITH A COPY OF ALL THE DOCUMENTS NOTED ABOVE ON THE PROJECT SITE AT ALL
2. ALL SUBSURFACE CONSTRUCTION SHALL COMPLY WITH THE "TRENCH SAFETY ACT". IT SHALL BE THE CONTRACTORS RESPONSIBILITY TO INSURE THAT ALL CONSTRUCTION IS IN COMPLIANCE WITH THE OCCUPATIONAL SAFETY AND HEALTH ADMINISTRATION (OSHA) REGULATIONS.
3. PRIOR TO CONSTRUCTION COMMENCEMENT, THE CONTRACTOR SHALL OBTAIN FROM THE ENGINEER AND/OR THE DEVELOPER COPIES OF ALL PERTINENT PERMITS AND APPROVALS RELATED TO THIS PROJECT. IT IS THE CONTRACTOR'S RESPONSIBILITY TO PROPERLY POST ALL PERMITS ON-SITE AND TO ASSURE ALL CONSTRUCTION ACTIVITIES ARE IN COMPLIANCE WITH THE CONDITIONS OF ALL PERMITS AND APPROVALS.
4. THE CONTRACTOR SHALL BE RESPONSIBLE FOR VERIFYING THE LOCATION OF ALL UTILITIES WHETHER OR NOT THEY ARE INDICATED ON THESE PLANS AND SHALL NOTIFY ALL UTILITY OWNERS A MINIMUM OF 48 HOURS IN ADVANCE OF CONSTRUCTION COMMENCEMENT. THE CONTRACTOR SHALL NOTIFY AND COORDINATE WITH ALL UTILITY COMPANITS AND GOVERNING AGENCING NECESSARY FOR CONSTRUCTION OF THE PROJECT, INCLUDING BUT NOT LIMITED TO PASCO COUNTY UNTILITIES, TECO, WREC, BRIGHTHOUSE NETWORKS. CALL SUNSHINE ONE (1-800-432-4770) PRIOR TO ANY EXCAVATION.
5. THE CONTRACTOR SHALL ASSURE AND BE RESPONSIBLE FOR THE PROPER PLACEMENT AND MAINTENANCE OF ALL TRAFFIC CONTROL DEVICES REQUIRED FOR THE CONSTRUCTION OF THIS PROJECT.
6. THE CONTRACTOR SHALL ASSURE AND BE RESPONSIBLE FOR THE PROPER PLACEMENT OF TREE BARRICADES PRIOR TO COMMENCING CONSTRUCTION AND SHALL MAINTAIN THE TREE BARRICADES THROUGH-OUT THE DURATION OF CONSTRUCTION. TREE BARRICADES SHALL BE PLACED IN ACCORDANCE WITH PASCO COUNTY REQUIREMENTS AND THE SITE SPECIFIC PERMIT ISSUED BY THE COUNTY.
7. DURING LAND ALTERATION AND CONSTRUCTION ACTIVITIES, IT SHALL BE UNLAWFUL TO REMOVE VEGETATION BY GRUBBING OR TO PLACE SOIL DEPOSITS, DEBRIS, SOLVENTS, CONSTRUCTION MATERIAL, MACHINERY OR OTHER EQUIPMENT OF ANY KIND WITHIN THE DRIPLINE OF TREES TO REMAIN ON THE SITE UNLESS OTHERWISE APPROVED BY PASCO COUNTY.
8. AREAS DISTURBED BY THE CONTRACTOR OUTSIDE OF THE CONSTRUCTION SITE SHALL BE RESTORED TO A CONDITION EQUAL TO OR BETTER THAN THE PRE-CONSTRUCTION CONDITION; THIS INCLUDES LANDS OWNED BY THE DEVELOPER.
9. THE CONTRACTOR SHALL TAKE ALL REASONABLE MEASURES TO GUARD AGAINST FUGITIVE DUST DURING CONSTRUCTION.
10. ALL PRACTICAL AND NECESSARY EFFORTS SHALL BE TAKEN DURING CONSTRUCTION TO CONTROL AND PREVENT EROSION AND TRANSPORT OF SEDIMENT TO SURFACE DRAINS, SURFACE WATERS OR ONTO ADJACENT PROPERTIES. THESE EFFORTS SHALL INCLUDE THE PLACEMENT AND MAINTENANCE OF SILT SCREENS AS INDICATED ON THESE PLANS AND/OR AS REQUIRED BY CONSTRUCTION PERMITS AND APPROVALS. RE-VEGETATION AND STABILIZATION OF DISTURBED GROUND SURFACES SHALL BE ACCOMPLISHED AS RAPIDLY AS POSSIBLE TO PREVENT EROSION FROM OCCURRING AND TO REDUCE SEDIMENTATION IN RUN-OFF.
11. THE CONTRACTOR SHALL NOT UNDERTAKE ANY WORK HE FEELS WILL CONSTITUTE A CHANGE ORDER WITHOUT THE WRITTEN APPROVAL OF THE ENGINEER AND THE DEVELOPER.
12. THE CONTRACTOR SHALL SUBMIT TO THE ENGINEER, FOR HIS REVIEW, ALL SHOP DRAWINGS A MINIMUM OF SEVEN (7) WORKING DAYS IN ADVANCE OF THE CONTRACTOR'S NEED FOR SAME.
13. ALL EXISTING WELLS TO BE ABANDONED SHALL BE PROPERLY ABANDONED BY A LICENSED WATER WELL CONTRACTOR IN ACCORDANCE WITH SWFWMD RULES 40D-3 AND 17-21.10(4) F.A.C.
14. PRIOR TO BIDDING, CONTRACTOR SHALL VERIFY THE TOPOGRAPHICAL INFORMATION AS SHOWN ON THE CONSTRUCTION DRAWINGS AND ACCEPT THE SITE (ACCURATE TO 0.5 FEET OF THE CONTOUR INTERVAL AND 0.2 FEET OVERALL) AS REPRESENTED. COMMENCEMENT OF SITE IMPROVEMENTS SHALL BE INTERPRETED AS ACCEPTANCE BY CONTRACTOR OF ALL REPRESENTATIONS IN CONTRACT DOCUMENTS.
15. CONTRACTOR SHALL PERFORM ALL CLEARING AND GRUBBING OPERATIONS IN ACCORDANCE WITH STANDARD CONSTRUCTION PROCEDURES AS REQUIRED TO CONSTRUCT ALL FACILITIES SHOWN ON THE CONSTRUCTION DRAWINGS.
16. ALL UNSUITABLE MATERIAL SHALL BE REMOVED BY CONTRACTOR FROM STRUCTURAL AREAS AND PLACED ON SITE IN NON STRUCTURAL AREAS OR AS SPECIFIED BY THE DEVELOPER. ALL EXCESS FILL MATERIAL EXCAVATED FROM THE SITE SHALL BE STOCKPILED ON SITE AS DIRECTED BY THE DEVELOPER AND SHALL REMAIN THE PROPERTY OF THE DEVELOPER.
17. THE DEVELOPER SHALL PROVIDE 2 BENCH MARKS AND A COORDINATE CONTROL SHEET FROM THE ENGINEER FOR THE CONTRACTOR'S USE. ALL FIELD SURVEY LAYOUT FOR THE FACILITIES SHOWN ON THE CONSTRUCTION DRAWINGS SHALL BE THE RESPONSIBILITY OF THE CONTRACTOR. THE CONTRACTOR SHALL MAINTAIN A SET OF FIELD "AS BUILTS" FOR ALL IMPROVEMENTS NOTING ANY FIELD ADJUSTMENTS. THE "AS BUILT" SHALL ALSO INCLUDE LOT, POND AND MITIGATION AREA GRADING. PRIOR TO FINAL PAYMENT, THE CONTRACTOR SHALL BE RESPONSIBLE TO SUBMIT A CERTIFIED SET OF "AS BUILTS" TO THE ENGINEER. EACH SHEET OF THE PLANS SHALL BE SIGNED, SEALED AND DATED BY A PROFESSIONAL LAND SURVEYOR LICENSED TO PERFORM LAND SURVEYING SERVICES IN THE STATE OF FLORIDA. THE ENGINEER SHALL REVIEW THE "AS BUILTS" AND CONVERT THEM INTO RECORD DRAWINGS.
18. CONTRACTOR TO CONSTRUCT ALL BUILDING PADS IN A LINEAR GRADING FASHION AS SHOWN ON THE CONSTRUCTION DRAWINGS. ALL BUILDINGS SHALL BE COMPACTED TO 95% OF THE MODIFIED PROCTOR VALUE (ASTM D-1557). AS PART OF THE AS BUILTS REQUIREMENTS UNDER #18 (ABOVE), THE CONTRACTOR SHALL ALSO AS BUILT THE BUILDING PADS AS SHOWN ON THE CONSTRUCTION DRAWINGS.
19. CONTRACTOR TO OBTAIN ALL REQUIRED PERMITS FOR BURNING ON SITE.
20. DEVELOPER SHALL PROVIDE SOILS AND MATERIALS TESTING SERVICES FROM A LICENSED GEOTECHNICAL ENGINEER AT HIS OWN EXPENSE. CONTRACTOR SHALL COOPERATE WITH THE OWNER'S GEOTECHNICAL ENGINEER AND SHALL NOTIFY THE GEOTECHNICAL ENGINEER AT LEAST 24 HOURS PRIOR TO ANY TESTING REQUIRED BY THE DEVELOPER, GOVERNMENTAL AGENCY OR AS RECOMMENDED BY GEOTECHNICAL ENGINEER. IF A FAILURE IN ANY OF THE CONTRACTOR'S ACTIVITIES RELATED TO SOILS OR MATERIALS TESTING OCCURS, THE CONTRACTOR SHALL IMMEDIATELY REMEDY THE FAILURE AT HIS EXPENSE AND RE-SCHEDULE THE RE-TESTING AS NECESSARY. ALL RE-TESTING FEES FROM THE GEOTECHNICAL ENGINEER RESULTING FROM THE AFORESAID FAILURES SHALL BE AT THE CONTRACTOR'S EXPENSE.
21. WORK PERFORMED BY THE CONTRACTOR SHALL INTERFACE SMOOTHLY WITH OTHER WORK BEING PERFORMED ON SITE OR ADJACENT TO THE SITE BY OTHER CONTRACTORS AND UTILITY COMPANIES. IT WILL BE NECESSARY FOR THE CONTRACTOR TO COORDINATE AND SCHEDULE HIS ACTIVITIES, WHERE NECESSARY, WITH OTHER CONTRACTORS AND UTILITY COMPANIES, INCLUDING BUT NOT LIMITED TO TECO, WREC & VERIZON.
22. OVERALL CLEAN-UP SHALL BE ACCOMPLISHED BY THE CONTRACTOR IN ACCORDANCE WITH PASCO COUNTY STANDARDS OR AS DIRECTED BY THE ENGINEER AND OWNER.
23. THE CONTRACTOR SHALL PROTECT AND MAINTAIN ACCESS TO PRIVATE PROPERTY. ANY DAMAGE CAUSED BY THE CONTRACTOR IN THE PERFORMANCE OF HIS WORK SHALL BE CORRECTED TO THE SATISFACTION OF THE ENGINEER AND THE OWNER AT THE CONTRACTOR'S EXPENSE.
24. ANY DAMAGE TO STATE, COUNTY, OR LOCAL ROADS CAUSED BY THE CONTRACTOR'S HAULING OR EXCAVATION EQUIPMENT SHALL BE REPAIRED BY THE CONTRACTOR TO THE SATISFACTION OF THE ENGINEER, THE OWNER, AND THE APPLICABLE GOVERNMENTAL AGENCY.
25. ANY U.S.C. & G.S. MONUMENT WITHIN LIMITS OF CONSTRUCTION IS TO BE PROTECTED BY THE CONTRACTOR.
26. GATED ENTRIES REQUIRE SIREN OPENING SYSTEM, (SOS), OR 3M OPTICOM SYSTEM FOR EMERGENCY ACCESS.

CONSTRUCTION SEQUENCE & MAINTENANCE SCHEDULE OF EROSION CONTROL

1. SEE BMP PLAN FOR SILT SCREEN BARRIER DETAILS & NOTES.
2. ALL EROSION CONTROL DEVICES AS INDICATED ON THESE PLANS SHALL BE INSTALLED PRIOR TO THE START OF ANY CONSTRUCTION.
3. DAILY INSPECTION OF THE EROSION CONTROL WILL BE REQUIRED BY THE CONTRACTOR. ANY DISTURBANCE OF THESE DEVICES SHALL BE REPAIRED IMMEDIATELY.
4. SILTATION ACCUMULATIONS GREATER THAN THE LESSER OF 12 INCHES OR ONE HALF THE DEPTH OF THE SILTATION CONTROL BARRIER SHALL BE IMMEDIATELY REMOVED AND PLACED IN UPLAND AREAS.
5. JURISDICTIONAL LINES SHALL BE MARKED IN THE FIELD FOR IDENTIFICATION AND LIMITS OF CONSTRUCTION.
6. MAINTENANCE OF ALL EROSION CONTROL DEVICES SHALL BE THE RESPONSIBILITY OF THE CONTRACTOR FOR THE LIFE OF THE PROJECT OR UNTIL APPROVED FOR REMOVAL BY THE ENGINEER.
7. SEE NOTE 9 &10 OF THE GENERAL NOTES THIS DWG.

EROSION PROTECTION

THE CONTRACTOR IS RESPONSIBLE FOR SITE CONDITIONS FROM THE DATE OF NOTICE TO PROCEED, UNTIL THE PROJECT IS ACCEPTED BY THE OWNER, ENGINEER AND PASCO COUNTY. ACCORDINGLY, THE CONTRACTOR SHALL TAKE ALL NECESSARY STEPS TO CONTROL FUGITIVE DUST AND EROSION. PROTECTION FROM EROSION INTO EXISTING WETLANDS, DRAINAGE WAYS, CONSERVATION AREAS, NATURAL AREAS AND OFFSITE AREAS, AS WELL AS NEWLY CONSTRUCTED ROADWAYS, STORMWATER FACILITIES AND MITIGATION AREAS, IS THE SOLE RESPONSIBILITY OF THE CONTRACTOR. THE CONTRACTOR SHALL MANAGE HIS WORK SO AS TO PREVENT EROSION. THIS MAY REQUIRE ADDITIONAL MEASURES FROM THOSE SHOWN ON THE CONSTRUCTION PLANS, SUCH AS WINDROWS, DIVERSION SWALES, SEED & MULCH, STAKED HAY BALES, OR OTHER EROSION CONTROL MEASURES NECESSARY TO REACT TO VARYING SITE CONDITIONS OR INCLEMENT WEATHER. IF EROSION OCCURS, THE CONTRACTOR SHALL IMMEDIATELY REMEDY THE DAMAGE CAUSED BY SUCH EROSION BY CONTROLLED REMOVAL OF SEDIMENTS, REPLANTING IF NECESSARY AND RE-ESTABLISHMENT OF EROSION PROTECTION DEVICES, AT THE CONTRACTOR'S SOLE EXPENSE.

HISTORICAL PRESERVATION NOTE

IF DURING CONSTRUCTION ACTIVITIES, ANY EVIDENCE OF HISTORIC RESOURCES, INCLUDING BUT NOT LIMITED TO ABORIGINAL OR HISTORIC POTTERY, PREHISTORIC STONE TOOLS, BONE OR SHELL TOOLS, HISTORIC TRASH PITS, OR HISTORIC POTTERY, FOUNDATION, ARE DISCOVERED, WORK SHALL COME TO AN IMMEDIATE STOP AND THE FLORIDA DEPARTMENT OF HISTORIC RESOURCES (STATE HISTORIC PRESERVATION OFFICER) AND PASCO COUNTY SHALL BE NOTIFIED WITHIN TWO WORKING DAYS OF THE RESOURCES FOUND ON THE SITE.

PROTECTED PLANT/ANIMAL NOTE

IF DURING CONSTRUCTION ACTIVITIES, ANY EVIDENCE OF THE PRESENCE OF STATE AND/OR FEDERALLY PROTECTED PLANT AND/OR ANIMAL SPECIES ARE DISCOVERED, WORK SHALL COME TO AN IMMEDIATE STOP AND PASCO COUNTY SHALL BE NOTIFIED WITHIN TWO WORKING DAYS OF THE PLANT AND/OR ANIMAL SPECIES FOUND ON THE SITE.

OPERATION/MAINTENANCE SCHEDULE

THE DEVELOPER OR HIS ASSIGNS SHALL BE RESPONSIBLE FOR THE MAINTENANCE OF THE DETENTION AREA AND SUBSURFACE DRAINAGE SYSTEM. THIS WILL REQUIRE INSPECTION, ON AT LEAST AN ANNUAL BASES, OF THE ON-SITE DRAINAGE SYSTEM, INCLUDING BUT NOT LIMITED TO, INLETS, STORM MANHOLES, DETENTION AREAS, AND CONTROL STRUCTURES, MAKING SURE THAT THE SYSTEM IS FREE FROM EXCESS SILT, DEBRIS AND SEDIMENTATION BUILD-UP. THIS MAY REQUIRE PERIODIC FLUSHING OF THE SUBSURFACE DRAINAGE SYSTEM, CUTTING AND REMOVAL OF VEGETATION FROM AND AROUND STRUCTURES, AND REMOVAL OF ACCUMULATED SEDIMENTS FROM THE BOTTOM OF THE DETENTION AREAS AND STRUCTURES AS NEEDED TO MAINTAIN THE VIABILITY OF THE ORIGINAL DESIGN INTENT. THE DESIGNATED LITTORAL ZONE SHALL BE MAINTAINED AS A FUNCTIONAL BIOLOGICAL FILTRATION AREA (I.E. VEGETATED ZONE) AND SHALL NOT BE LESS THAN 35% OF THE POND SURFACE.

GENERAL MAINTENANCE

1. ALL STORM WATER PIPES, INLETS, CATCH BASINS, MANHOLES, FLUMES, POND INFLOW AND OUTFALL STRUCTURES (INCLUDING OIL SKIMMERS), AND DISCHARGE PIPES SHOULD BE INSPECTED ON A REGULAR BASIS (MONTHLY OR QUARTERLY) AND AFTER MAJOR RAINFALLS. THEY SHOULD BE MAINTAINED BY REMOVING BUILT-UP DEBRIS AND VEGETATION AND REPAIRING DETERIORATING STRUCTURES.
2. CHEMICALS, OILS, GREASES, OR SIMILAR WASTES ARE NOT TO BE DISPOSED OF DIRECTLY TO THE STORMWATER FACILITY OR THROUGH STORM SEWERS. TREATMENT PONDS ARE DESIGNED TO TREAT NORMAL ROAD, PARKING LOT, ROOF AND YARD RUNOFF ONLY. SOME CHEMICALS MAY INTERFERE WITH A TREATMENT POND'S FUNCTIONS OR KILL VEGETATION AND WILDLIFE. DISPOSE OF THESE POTENTIALLY DANGEROUS MATERIALS PROPERLY BY TAKING THEM TO RECYCLING FACILITIES OR TO LOCAL "AMNESTY DAYS" SPONSORED BY MANY LOCAL GOVERNMENTS. ALSO, DO NOT DISPOSE OF GRASS CLIPPINGS IN SWMS. GRASS CLIPPINGS POSE PROBLEMS BY SMOTHERING DESIRABLE VEGETATION, CLOGGING OUTFALL STRUCTURES, AND WHEN THEY DECOMPOSE, MAY CAUSE UNSIGHTLY ALGAE BLOOMS THAT CAN KILL FISH.
3. ACCUMULATED POND SEDIMENTS MAY CONTAIN HEAVY METALS SUCH AS LEAD, CADMIUM AND MERCURY, AS WELL AS OTHER POTENTIALLY HAZARDOUS MATERIALS. THEREFORE, SEDIMENTS REMOVED FROM STORM SEWERS, INLETS, PIPES AND PONDS SHOULD BE DISPOSED OF AT AN APPROVED FACILITY (CHECK WITH THE COUNTY SOLID WASTE DEPARTMENT OR THE FLORIDA DEPARTMENT OF ENVIRONMENTAL PROTECTION FOR DISPOSAL FACILITIES APPROVED TO ACCEPT TREATMENT POND SEDIMENT).
4. DURING ANY REPAIR OR MAINTENANCE ACTIVITY USE CARE TO AVOID CAUSING EROSION OR SILTATION TO ADJACENT OR OFF-SITE AREAS.
5. REMEMBER, ALTERATIONS (FILLING, ENLARGING, ETC.) OF ANY PART OF THE STORMWATER FACILITY IS NOT PERMITTED WITHOUT PRIOR APPROVAL FROM ALL APPLICABLE GOVERNING AGENCIES.
6. THE APPROVED OPERATION AND MAINTENANCE PERMIT AND AS-BUILT DRAWINGS ARE AVAILABLE AT YOUR LOCAL DISTRICT SERVICE OFFICE. REFER TO THOSE PLANS AND PERMITS FOR ADDITIONAL RESTRICTIONS, INSTRUCTIONS AND CONDITIONS.
7. IT IS USUALLY MORE COST EFFECTIVE TO MONITOR AND PERFORM ROUTINE MAINTENANCE ON A SWMS, RATHER THAN LET IT FAIL AND HAVE TO RECONSTRUCT THE ENTIRE SYSTEM.
8. MOSQUITO GROWTH CAN BE MINIMIZED IN A SWMS BY THE FOLLOWING MEASURES:
 A. DO NOT DUMP GRASS CLIPPINGS OR OTHER ORGANIC DEBRIS INTO SWMS - DECAYING GRASS CLIPPINGS AND OTHER DECOMPOSING VEGETATION CREATE IDEAL CONDITIONS FOR BREEDING MOSQUITOS.
 B. CLEAN OUT ANY OBSTRUCTIONS WHICH GET INTO THE SYSTEM. DEBRIS CAN OBSTRUCT FLOW AND HARBOR MOSQUITO EGGS AND LARVAE.
 C. REMOVE WATER LETTUCE AND WATER HYACINTH, WHICH NOURISH AND SHELTER MOSQUITO LARVAE.
 D. STOCK PONDS WITH PREDATORY "MOSQUITOFISH"- GAMBUSIA MINNOWS

WET DETENTION POND MAINTENANCE

1. ALL SODDED SIDE SLOPES AND BERMS SHOULD BE MAINTAINED BY THE PROCEDURE OUTLINED FOR DITCHES AND SWALES. INFLOW STRUCTURES SHOULD BE MAINTAINED BY THE PROCEDURES OUTLINED UNDER "GENERAL MAINTENANCE".
2. MAINTAIN, RATHER THAN REMOVE, WETLAND VEGETATION THAT BECOMES ESTABLISHED IN THE LITTORAL ZONE. DO NOT CUT, MOW, USE HERBICIDE OR GRASS CARP TO REMOVE ANY OF THE VEGETATION IN THE LITTORAL ZONE WITHOUT PRIOR APPROVAL FROM THE DISTRICT. REFER TO THE CONDITIONS OF THE PERMIT AND CONSTRUCTION NOTES OF ANY FURTHER INSTRUCTIONS.
3. WHEN WET DETENTION POND LITTORAL ZONES ARE INTENTIONALLY PLANTED FOR AESTHETIC PURPOSES OR TO OFFSET WETLANDS IMPACTS, REMOVAL OF WEEDY OR EXOTIC VEGETATION MAY BE REQUIRED AND ACCOMPANIED BY REPLANTING OF DESIRABLE VEGETATION. CHECK WITH THE LOCAL DISTRICT SERVICE OFFICE TO DETERMINE SPECIFIC REQUIREMENTS.
4. ON A MONTHLY OR QUARTERLY BASIS AND AFTER SEVERE RAINFALL EVENTS, CHECK THE AREA IN FRONT OF THE OUTFALL CONTROL STRUCTURE FOR BUILT-UP SEDIMENTS AND VEGETATION THAT IMPAIR THE OPERATION OF THE STRUCTURE. REMOVE SEDIMENT AND VEGETATION TO AN APPROVED DISPOSAL SITE.
5. WHEN LITTORAL ZONE VEGETATION AND SEDIMENT ACCUMULATE TO SUCH AN EXTENT THAT WATER DEPTH DECREASES, THE LITTORAL ZONE MAY NEED TO BE REGRADED AND REVEGETATED. WHEN IT APPEARS THAT A POND HAS REACHED THIS STATE, IT IS BEST TO CONTACT A DISTRICT REPRESENTATIVE PRIOR TO LARGE SCALE MAINTENANCE.

DITCH & SWALE MAINTENANCE

SOME MSSW AND ERP PERMITS REQUIRE THAT THE VEGETATION IN SOME DITCHES BE PROTECTED TO OFFSET WETLAND IMPACTS PERMITTED DURING CONSTRUCTION OR FOR WATER QUALITY TREATMENT. THE PERMIT OR APPROVED CONSTRUCTION SHOULD CLEARLY IDENTIFY WHICH DITCH VEGETATION MUST BE PRESERVED. IF YOU'RE UNSURE, CONTACT THE LOCAL DISTRICT SERVICE OFFICE. IF VEGETATION IS NOT REQUIRED TO BE PROTECTED, DITCHES AND SWALES SHOULD BE PERIODICALLY MOWED AND CLEANED OF ACCUMULATED REFUSE. DURING THE MOWING OPERATIONS, DITCHES AND SWALES SHOULD BE INSPECTED FOR BARE SPOTS, DAMAGE OR EROSION. BARE AREAS SHOULD BE SODDED OR SEEDED TO REPLACE THE GRASS COVER. IN THE CASE OF EROSION, REPLACE THE MISSING SOILS AND BRING THE AREA BACK TO GRADE. SOME DITCHES ARE DESIGNED TO STORE RUNOFF FOR SHORT PERIODS OF TIME UTILIZING DITCH BLOCKS OR RAISED INLETS. THESE DITCH BLOCKS OR INLETS SHOULD NOT BE REMOVED OR ALTERED. IF YOU ARE UNABLE TO IDENTIFY WHAT TYPE OF TREATMENT METHOD SERVES YOUR DEVELOPMENT, CONTACT THE DISTRICT SERVICE OFFICE.

HOW TO OPERATE AND MAINTAIN THE STORMWATER MANAGEMENT SYSTEM

YOUR STORMWATER MANAGEMENT SYSTEM (SWMS) IS DESIGNED AND CONSTRUCTED TO COMPLY WITH CERTAIN ENVIRONMENTAL PROTECTION CRITERIA. STORMWATER PONDS AND THEIR ASSOCIATED SURFACE WATER MANAGEMENT FACILITIES ARE DESIGNED TO CAPTURE AND REMOVE POLLUTANTS FROM SPECIFIC VOLUMES OF STORMWATER RUNOFF THROUGH PROCESSES SUCH AS PERCOLATION, FILTERING AND/OR DETENTION. AS LONG AS THEY ARE CONSTRUCTED PROPERLY AND MAINTAINED IN AN EFFECTIVE STATE, WATER QUALITY STANDARDS ARE PRESUMED TO BE MET. STORMWATER MANAGEMENT SYSTEMS SHOULD BE INSPECTED ON A ROUTINE BASIS TO ENSURE THAT THEY ARE FUNCTIONING PROPERLY. INSPECTIONS SHOULD BE SCHEDULED ON A MONTHLY OR QUARTERLY BASIS AND FOLLOWING ANY MAJOR RAIN EVENT. MORE FREQUENT INSPECTIONS MAY BE NECESSARY DURING THE RAINY SEASON. KEEPING DETAILED NOTES ON MAINTENANCE ACTIVITIES WILL HELP WHEN PROVIDING A REPORT TO THE DISTRICT AT THE TIME OF YOUR 18 OR 24 MONTH INSPECTION. YOUR MANAGEMENT AND STORAGE OF SURFACE WATERS (MSSW) PERMIT OR ENVIRONMENTAL RESOURCES PERMIT (ERP) INCLUDES A CONDITION THAT SPECIFIES HOW OFTEN THE INSPECTION REPORTS ARE DUE. IT WOULD BE WISE TO DESIGNATE ONE INDIVIDUAL AS THE PERSON RESPONSIBLE FOR OVERSEEING OPERATION AND MAINTENANCE ACTIVITIES, MONITORING AND REPORTING. THIS WILL ALLOW THAT INDIVIDUAL TO BECOME WELL-ACQUAINTED WITH THE SWMS. A COPY OF THE PERMIT AND DISTRICT-APPROVED CONSTRUCTION DRAWINGS SHOULD BE MADE AVAILABLE TO THE RESPONSIBLE PERSON IF QUESTIONS OR ISSUES DEVELOP.

DRAINAGE

1. STANDARD INDICES REFER TO THE LATEST EDITION OF PASCO COUNTY & FDOT SPECIFICATIONS.
2. ALL STORM SEWER PIPE SHALL BE REINFORCED CONCRETE CLASS III (ASTM 6-76-72A) UNLESS OTHERWISE NOTED ON PLANS. ALL DRAINAGE STRUCTURES SHALL BE IN ACCORDANCE WITH PASCO COUNTY AND FDOT DESIGN STANDARDS UNLESS OTHERWISE NOTED ON PLANS.
3. PIPE LENGTHS SHOWN ARE APPROXIMATE AND TO CENTER OF DRAINAGE STRUCTURE WITH THE EXCEPTION OF MITERED AND FLARED END SECTIONS, WHICH ARE NOT INCLUDED IN LENGTHS.
4. ALL DRAINAGE STRUCTURE TOPS AND COVERS SHALL BE TRAFFIC RATED FOR H-20 LOADINGS.
5. ALL STORM DRAINAGE PIPING SHALL BE SUBJECT TO A VISUAL INSPECTION BY THE OWNER'S ENGINEER PRIOR TO THE PLACEMENT OF BACKFILL. CONTRACTOR TO NOTIFY THE ENGINEER 48 HOURS IN ADVANCE TO SCHEDULE INSPECTION.
6. THE CONTRACTOR SHALL MAINTAIN AND PROTECT FROM MUD, DIRT, DEBRIS, ETC. THE STORM DRAINAGE SYSTEM UNTIL FINAL ACCEPTANCE OF THE PROJECT. THE CONTRACTOR MAY BE REQUIRED TO CLEAN PIPES AND INLETS PRIOR TO FINAL ACCEPTANCE.

National Pollution Discharge Elimination System (NPDES) Requirements

THE ENGINEER WILL COMPLETE APPROPRIATE SECTIONS OF THE NOTICE OF INTENT (NOI) AND NOTICE OF TERMINATION (NOT) APPLICATIONS AVAILABLE FROM FLORIDA DEPARTMENT OF ENVIRONMENTAL PROTECTION (FDEP). THE ENGINEER WILL SUBMIT THE NOI AND THE NOT TO THE OWNER OR THE CONTRACTOR FOR COMPLETION, SIGNATURE AND TRANSMITTAL TO THE FDEP. THE ENGINEER WILL ALSO PREPARE A SUGGESTED DRAFT STORMWATER POLLUTION PREVENTION PLAN (SWPPP) FOR THE SITE. THE ENGINEER WILL SUBMIT THE SUGGESTED DRAFT SWPPP TO THE OWNER OR THE CONTRACTOR FOR USE ONLY AS A GUIDE IN PREPARING THE FINAL SWPPP. THE FINAL SWPPP, AS PREPARED BY THE OWNER OR THE CONTRACTOR, WILL BE LOCATED ON SITE AND MONITORED AS DESCRIBED IN THE NOI.

THE OWNER OR THE CONTRACTOR WILL ALSO BE RESPONSIBLE FOR THE FOLLOWING:
1. SIGNING THE NOI, NOT, AND THE FINAL SWPPP AS THE "OPERATOR AND/OR RESPONSIBLE AUTHORITY" FOR THE PROJECT.
2. IMPLEMENTING THE "BEST MANAGEMENT PRACTICES" AS SHOWN IN THE FINAL SWPPP PREPARED BY OTHERS.
3. MAINTAINING THE "BEST MANAGEMENT PRACTICES" AS SHOWN IN THE SWPPP PREPARED BY OTHERS AS REQUIRED TO ACCOMMODATE CONDITIONS IN THE FIELD.
4. MONITORING THE SITE CONDITIONS AND PREPARING ALL REPORTS AS REQUIRED BY THE CONDITIONS OF THE GENERAL NPDES PERMIT.

WATER, WASTEWATER & REUSE WATER SYSTEM NOTES

1. HORIZONTAL SEPARATION BETWEEN UNDERGROUND WATER MAINS AND SANITARY OR STORM SEWERS, WASTEWATER OR STORMWATER FORCE MAINS, RECLAIMED WATER PIPELINES, AND ON-SITE SEWAGE TREATMENT AND DISPOSAL SYSTEMS SHALL BE AS FOLLOWS:
A. NEW OR RELOCATED UNDERGROUND WATER MAINS SHALL BE LAID TO PROVIDE A HORIZONTAL DISTANCE OF AT LEAST THREE FEET BETWEEN THE OUTSIDE OF THE WATER MAIN AND THE OUTSIDE OF ANY EXISTING OR PROPOSED STORM SEWER, STORMWATER FORCE MAIN, OR PIPELINE CONVEYING RECLAIMED WATER REGULATED UNDER PART III OF CHAPTER 62-610,
B. NEW OR RELOCATED UNDERGROUND WATER MAINS SHALL BE LAID TO PROVIDE A HORIZONTAL DISTANCE OF AT LEAST THREE FEET, AND PREFERABLY TEN FEET, BETWEEN THE OUTSIDE OF THE WATER MAIN AND THE OUTSIDE OF ANY EXISTING OR PROPOSED VACUUM-TYPE SANITARY SEWER.
C. NEW OR RELOCATED UNDERGROUND WATER MAINS SHALL BE LAID TO PROVIDE A HORIZONTAL DISTANCE AT LEAST SIX FEET, AND PREFERABLY TEN FEET, BETWEEN THE OUTSIDE OF THE WATER MAIN AND THE OUTSIDE OF ANY EXISTING OR PROPOSED GRAVITY- OR PRESSURE-TYPE SANITARY SEWER, WASTEWATER FORCE MAIN, OR PIPELINE CONVEYING RECLAIMED WATER NOT REGULATED UNDER PART III OF CHAPTER 62-610, F.A.C. THE MINIMUM HORIZONTAL SEPARATION DISTANCE BETWEEN WATER MAINS AND GRAVITY-TYPE SANITARY SEWERS SHALL BE REDUCED TO THREE FEET WHERE THE BOTTOM OF THE WATER MAIN IS LAID AT LEAST SIX INCHES ABOVE THE TOP OF THE SEWER.
D. NEW OR RELOCATED UNDERGROUND WATER MAINS SHALL BE LAID TO PROVIDE A HORIZONTAL DISTANCE OF AT LEAST TEN FEET BETWEEN THE OUTSIDE OF THE WATER MAIN AND ALL PARTS OF ANY EXISTING OR PROPOSED "ON-SITE SEWAGE TREATMENT AND DISPOSAL SYSTEM" AS DEFINED IN SECTION 381.0065(2), F.S., AND RULE 64E-6.002, F.A.C.
2. VERTICAL SEPARATION BETWEEN UNDERGROUND WATER MAINS AND SANITARY OR STORM SEWERS, WASTEWATER OR STORMWATER FORCE MAINS, AND RECLAIMED WATER PIPELINES SHALL BE AS FOLLOWS:
A. NEW OR RELOCATED UNDERGROUND WATER MAINS CROSSING ANY EXISTING OR PROPOSE GRAVITY-OR VACUUM-TYPE SANITARY SEWER OR STORM SEWER SHALL BE LAID SO THE OUTSIDE OF THE WATER MAIN IS AT LEAST SIX INCHES, AND PREFERABLY 12 INCHES, ABOVE OR AT LEAST 12 INCHES BELOW THE OUTSIDE OF THE OTHER PIPELINE. HOWEVER, IT IS PREFERABLE TO LAY THE WATER MAIN ABOVE THE OTHER PIPELINE.
B. NEW OR RELOCATED UNDERGROUND WATER MAINS CROSSING ANY EXISTING OR PROPOSED PRESSURE-TYPE SANITARY SEWER, WASTEWATER OR STORMWATER FORCE MAIN, OR PIPELINE CONVEYING RECLAIMED WATER SHALL BE LAID SO THE OUTSIDE OF THE WATER MAIN IS AT LEAST 12 INCHES ABOVE OR BELOW THE OUTSIDE OF THE OTHER PIPELINE. HOWEVER, IT IS PREFERABLE TO LAY THE WATER MAIN ABOVE THE OTHER PIPELINE.
C. AT THE UTILITY CROSSINGS DESCRIBED IN PARAGRAPHS (A) AND (B) ABOVE, ONE FULL LENGTH OF WATER MAIN PIPE SHALL BE CENTERED ABOVE OR BELOW THE OTHER PIPELINE SO THE WATER MAIN JOINTS WILL BE AS FAR AS POSSIBLE FROM THE OTHER PIPELINE. ALTERNATIVELY, AT SUCH CROSSINGS, THE PIPES SHALL BE ARRANGED SO THAT ALL WATER MAIN JOINTS ARE AT LEAST THREE FEET FROM ALL JOINTS IN VACUUM-TYPE SANITARY SEWERS, STORM SEWERS, STORMWATER FORCE MAINS, OR PIPELINES CONVEYING RECLAIMED WATER REGULATED UNDER PART III OF CHAPTER 62-610, F.A.C. AND AT LEAST SIX FEET FROM ALL JOINTS IN GRAVITY-OR PRESSURE-TYPE SANITARY SEWERS, WASTEWATER FORCE MAINS, OR PIPELINES CONVEYING RECLAIMED WATER NOT REGULATED UNDER PART III OF CHAPTER 62-610, F.A.C.
3. SEPARATION BETWEEN WATER MAINS AND SANITARY OR STORM SEWER MANHOLES.
A. NO WATER MAIN SHALL PASS THROUGH, OR COME INTO CONTACT WITH, ANY PART OF A SANITARY SEWER MANHOLE, STORM SEWER MANHOLE OR INLET STRUCTURE.
4. ALL UTILITY MATERIAL AND WORKMANSHIP MUST COMPLY WITH "PASCO COUNTY STANDARDS FOR DESIGN AND CONSTRUCTION OF WATER, WASTEWATER, AND RECLAIMED WATER FACILITIES", JUNE 1995 EDITION.T
5. ALL PVC WATER MAINS 4 - 12 INCHES SHALL BE IN ACCORDANCE WITH AWWA C-900. PIPE SHALL BE CLASS 200 AND MEET THE REQUIREMENTS OF DR-14.
6. ALL PVC WATER MAIN SMALLER THAN 4 INCHES SHALL BE CLASS 200 AND MEET THE REQUIREMENTS OF SDR 21 IN ACCORDANCE WITH ASTM D-2241.
7. ALL PVC SANITARY SEWER PIPE SHALL MEET THE REQUIREMENTS OF ASTM D-3034 WITH THICKNESS AS FOLLOWS: AT INVERTS FROM 0' - 12' SHALL BE SDR-35, INVERT DEPTHS FROM 12' - 18' SHALL BE SDR 26. FOR INVERTS DEEPER THAN18', DUCTILE IRON PIPE SHALL BE USED.
8. ALL DUCTILE IRON UTILITY WATER MAIN, SANITARY SEWER PIPE AND REUSE WATER MAINS SHALL BE CLASS 50 IN ACCORDANCE WITH ANSI A 21.52.
9. RECLAIMED WATER MAINS 4 - 12 INCHES SHALL BE IN ACCORDANCE WITH AWWA C-900, DR18. RECLAIMED WATER MAINS 14 - 24 INCHES SHALL BE IN ACCORDANCE WITH AWWA C-905, DR25. ALL PIPE SHALL BE CLASS 150.
10. ALL PVC REUSE WATER MAINS SMALLER THAN 4" SHALL BE CLASS 200 AND MEET THE REQUIREMENTS OF SDR 21 IN ACCORDANCE WITH ASTM D-2241.
11. ALL WATER MAINS, SANITARY SEWER MAINS AND RECLAIMED WATER MAINS SHALL HAVE A MINIMUM OF 36 INCHES OF COVER, EXCEPT AS NOTED.
12. PRIOR TO COMMENCING NEW WORK WHICH REQUIRES CONNECTING TO EXISTING LINES OR APPURTENANCES, THE CONTRACTOR SHALL NOTIFY THE APPROPRIATE UTILITY AND SHALL VERIFY THE LOCATION AND ELEVATION OF THE EXISTING CONNECTION POINT AND NOTIFY THE DEVELOPER'S ENGINEER OF ANY CONFLICTS OR DISCREPANCIES.
13. CONNECTIONS INTO EXISTING COUNTY-OWNED SYSTEMS SHALL BE VIA WET TAP. WET TAPS SHALL BE PERFORMED BY THE PASCO COUNTY UTILITIES SERVICES BRANCH AT THE OWNER'S EXPENSE. MATERIALS FOR WET TAPS LARGER THAN 2" SHALL BE PROVIDED AND INSTALLED BY THE PROJECT CONTRACTOR. EXCAVATION, BACKFILL, AND SURFACE RESTORATION SHALL BE THE CONTRACTOR'S RESPONSIBILITY.
14. LOCATION OF THE SANITARY SEWER SERVICE LATERALS, IF INDICATED ON THE PLANS ARE A DISTANCE FROM THE DOWNSTREAM MANHOLE.
15. LOCATION OF THE WATER SERVICE SLEEVE, IF INDICATED ON THE PLANS, ARE PER THE CENTERLINE ROAD STATIONING.
16. CONFLICTS BETWEEN REUSE WATER AND STORM, SANITARY SEWER OR WATER MAIN TO BE RESOLVED BY ADJUSTING THE REUSE WATER LINES AS NECESSARY.
17. JOINT RESTRAINTS SHALL BE PROVIDED AT ALL FITTINGS, JOINTS AND BENDS AS SHOWN ON DETAILS.
18. ALL PIPE AND FITTINGS SHALL BE CLEARLY MARKED WITH THE NAME OR TRADEMARK OF THE MANUFACTURER, THE BATCH NUMBER, THE LOCATION OF THE PLANT AND STRENGTH DESIGNATION, AS APPLICABLE . ALL PIPE SHALL BE LAID WITH A TWO INCH METALLIC TAPE APPROPRIATELY COLOR CODED AND IMPRINTED WITH THE TYPE OF SERVICE 12 INCHES TO 18 INCHES BELOW FINAL GRADE, DIRECTLY ABOVE THE UTILITY FOR IDENTIFICATION AND EASE OF LOCATION. THE APPROPRIATE TAPE COLOR CODES ARE AS FOLLOWS:
 GREEN SANITARY FORCE MAIN
 BLUE POTABLE WATER
 PURPLE TREATED EFFLUENT FOR REUSE
19. THE CONTRACTOR SHALL TEST ALL GRAVITY SEWERS IN ACCORDANCE WITH PASCO COUNTY REGULATIONS. IF ACCEPTABLE, SAID TESTS WILL BE CERTIFIED BY THE ENGINEER OF RECORD AS REQUIRED.
20. PIPE DEFLECTION SHALL BE IN ACCORDANCE WITH AWWA STANDARD C-600, LATEST EDITION.
21. THRUST BLOCKS ARE NOT ALLOWED! RESTRAINED JOINTS SHALL BE USED ON ALL PRESSURIZED PIPING.
22. FIRE HYDRANTS WILL REQUIRE FLOW TESTING AND COLOR-CODING BASED ON TEST RESULTS.

PAVING AND GRADING

1. ALL DELETERIOUS SUBSURFACE MATERIAL (I.E. MUCK, PEAT, BURIED DEBRIS) IS TO BE EXCAVATED IN ACCORDANCE WITH THESE PLANS OR AS DIRECTED BY THE OWNER, THE OWNER'S ENGINEER, OR OWNER'S SOIL TESTING COMPANY. DELETERIOUS MATERIAL IS TO BE STOCKPILED OR REMOVED FROM THE SITE AS DIRECTED BY THE OWNER. EXCAVATED AREAS TO BE BACK FILLED WITH APPROVED MATERIALS AND COMPACTED AS SHOWN ON THESE PLANS. CONTRACTOR IS RESPONSIBLE FOR ACQUIRING ANY PERMITS THAT ARE NECESSARY FOR REMOVING DELETERIOUS MATERIAL FROM THE SITE.
2. THE CONTRACTOR SHALL BE RESPONSIBLE FOR PROTECTING EXCAVATIONS AGAINST COLLAPSE AND WILL PROVIDE BRACING, SHEETING OR SHORING AS NECESSARY. DEWATERING METHODS SHALL BE USED AS REQUIRED TO KEEP TRENCHES DRY WHILE PIPE AND APPURTENANCES ARE BEING PLACED.
3. ALL NECESSARY FILL AND EMBANKMENT THAT IS PLACED DURING CONSTRUCTION SHALL CONSIST OF MATERIAL SPECIFIED BY THE OWNER'S SOIL TESTING COMPANY OR ENGINEER AND BE PLACED AND COMPACTED ACCORDING TO THESE PLANS OR THE REFERENCED SOILS REPORT.
4. PROPOSED SPOT ELEVATIONS REPRESENT TOP OF FINISHED PAVEMENT OR GROUND SURFACE GRADE UNLESS OTHERWISE NOTED ON DRAWINGS.
5. CONTRACTOR SHALL TRIM, TACK AND MATCH EXISTING PAVEMENT AT LOCATIONS WHERE NEW PAVEMENT MEETS EXISTING PAVEMENT.
6. CONCRETE CURBING WILL BE PLACED AS SHOWN ON THE PLANS.
7. THE CONTRACTOR WILL STABILIZE BY SEED AND MULCH, SOD OR OTHER APPROVED MATERIALS ANY DISTURBED AREAS WITHIN ONE WEEK FOLLOWING CONSTRUCTION OF THE PAVEMENT AREAS. CONTRACTOR SHALL MAINTAIN SUCH AREAS UNTIL FINAL ACCEPTANCE BY OWNER.
8. THE CONTRACTOR IS RESPONSIBLE FOR COORDINATING APPLICABLE TESTING WITH THE SOILS ENGINEER. TESTS WILL BE REQUIRED PURSUANT TO PASCO COUNTY. UPON COMPLETION OF PROPOSED CONSTRUCTION, SOILS ENGINEER WILL SUBMIT CERTIFICATIONS TO THE OWNER'S ENGINEER STATING THAT ALL REQUIREMENTS HAVE BEEN MET.
9. ALL UNDERGROUND UTILITIES, INCLUDING UTILITY SLEEVES, AND CONDUITS SHALL BE INSTALLED PRIOR TO BASE & PAVEMENT CONSTRUCTION.

CLEARING/DEMOLITION

1. PRIOR TO ANY SITE CLEARING, ALL TREES SHOWN TO REMAIN AS INDICATED ON THE CONSTRUCTION PLANS SHALL BE PROTECTED IN ACCORDANCE WITH LOCAL TREE ORDINANCES AND DETAILS CONTAINED IN THESE PLANS. IT SHALL BE THE CONTRACTOR'S RESPONSIBILITY TO MAINTAIN THESE TREES IN GOOD CONDITION. NO TREE SHOWN TO REMAIN SHALL BE REMOVED WITHOUT WRITTEN APPROVAL FROM PASCO COUNTY AND THE OWNER.
2. THE CONTRACTOR SHALL CLEAR AND GRUB THE SITE NECESSARY FOR CONSTRUCTION. DISTURBED AREAS, NOT OTHERWISE STABILIZED, WILL BE SEEDED, MULCHED, SODDED OR PLANTED WITH OTHER APPROVED LANDSCAPE MATERIAL IMMEDIATELY FOLLOWING CONSTRUCTION.
3. REMAINING MATERIAL THAT RESULTS FROM CLEARING AND GRUBBING OR SITE EXCAVATION IS TO BE UTILIZED ON-SITE IF REQUIRED, PROVIDED THAT THE MATERIAL IS DEEMED SUITABLE FOR CONSTRUCTION BY THE OWNER'S SOILS TESTING COMPANY. EXCESS MATERIAL IS TO BE EITHER STOCKPILED ON THE SITE AS DIRECTED BY THE OWNER OR OWNER'S ENGINEER, OR REMOVED FROM THE SITE. THE CONTRACTOR IS RESPONSIBLE FOR ACQUIRING ANY PERMITS THAT ARE NECESSARY FOR REMOVING EXCESS EARTHWORK FROM THE SITE.
4. ALL CONSTRUCTION DEBRIS AND OTHER WASTE MATERIALS SHALL BE DISPOSED OF OFF-SITE BY THE CONTRACTOR IN ACCORDANCE WITH APPLICABLE REGULATORY AGENCY REQUIREMENTS.

SAFETY

1. DURING THE CONSTRUCTION AND MAINTENANCE OF THIS PROJECT, ALL SAFETY REGULATIONS ARE TO BE ENFORCED. THE CONTRACTOR SHALL BE TOTALLY RESPONSIBLE FOR THE CONTROL AND SAFETY OF THE TRAVELING PUBLIC AND THE SAFETY OF HIS PERSONNEL.
2. LABOR SAFETY REGULATIONS SHALL CONFORM TO THE PROVISIONS SET FORTH BY OSHA IN THE FEDERAL REGISTER OF THE DEPARTMENT OF TRANSPORTATION.
3. CONTRACTOR SHALL PROVIDE AND MAINTAIN ITS OWN SAFETY EQUIPMENT IN ACCORDANCE WITH ITS HEALTH & SAFETY PROGRAM AND ALL OTHER APPLICABLE LEGAL AND HEALTH AND SAFETY REQUIREMENTS. THE CONTRACTOR IS ALSO RESPONSIBLE FOR PROVIDING ITS EMPLOYEES AND SUBCONTRACTORS WITH ADEQUATE INFORMATION AND TRAINING TO ENSURE THAT ALL EMPLOYEES AND SUBCONTRACTORS AND SUBCONTRACTORS' EMPLOYEES COMPLY WITH ALL APPLICABLE REQUIREMENTS. CONTRACTOR SHALL REMAIN IN COMPLIANCE WITH ALL OCCUPATION SAFETY AND HEALTH REGULATIONS AS WELL AS THE ENVIRONMENTAL PROTECTION LAWS. THE FOLLOWING IS NOT TO BE PERCEIVED AS THE ENTIRE SAFETY PROGRAM BUT JUST BASIC REQUIREMENTS.
4. ALL EXCAVATIONS BY THE CONTRACTOR SHALL CONFORM TO THE REQUIREMENTS OF THE DEPARTMENT OF LABOR'S OCCUPATIONAL SAFETY AND HEALTH ADMINISTRATION RULES AND REGULATIONS. PARTICULAR ATTENTION MUST BE PAID TO THE CONSTRUCTION STANDARDS FOR EXCAVATIONS, 29 CFR PART 1926, SUBPART P.
5. THE MINIMUM STANDARDS AS SET FORTH IN THE CURRENT EDITION OF "THE STATE OF FLORIDA, MANUAL ON TRAFFIC CONTROL AND SAFE PRACTICES FOR STREET AND HIGHWAY CONSTRUCTION, MAINTENANCE AND UTILITY OPERATIONS" SHALL BE FOLLOWED IN THE DESIGN APPLICATION, INSTALLATION, MAINTENANCE AND REMOVAL OF ALL TRAFFIC CONTROL DEVICES, WARNING DEVICES AND BARRIERS NECESSARY TO PROTECT THE PUBLIC AND WORKMEN FROM HAZARDS WITHIN THE PROJECT LIMITS.
6. IT SHALL BE THE SOLE RESPONSIBILITY OF THE CONTRACTOR TO COMPLY AND ENFORCE ALL APPLICABLE SAFETY REGULATIONS. THE ABOVE INFORMATION HAS BEEN PROVIDED FOR THE CONTRACTOR'S INFORMATION ONLY AND DOES NOT IMPLY THAT THE OWNER OR ENGINEER WILL INSPECT AND/OR ENFORCE SAFETY REGULATIONS.
7. THE CONTRACTOR SHALL EXERCISE EXTREME CAUTION IN AREAS OF BURIED UTILITIES AND SHALL PROVIDE AT LEAST 48 HOURS NOTICE TO THE UTILITY COMPANIES PRIOR TO CONSTRUCTION TO OBTAIN FIELD LOCATIONS OF EXISTING UNDERGROUND UTILITIES. CALL SUNSHINE ONE (1-800-432-4770) TO ARRANGE FIELD LOCATIONS.

PASCO COUNTY FIRE PROTECTION NOTES

1. ALL PROJECTS MUST COMPLY WITH PASCO COUNTY FIRE HYDRANT ORDINANCE NO. 46-51
2. FIRE HYDRANTS SHALL BE INSTALLED AND IN SERVICE PRIOR TO THE ACCUMULATION OF COMBUSTIBLES
3. PER THE NATIONAL FIRE PROTECTION ASSOCIATION, NFPA-1 16.4.3.1.3. WHERE UNDERGROUND WATER MAINS AND HYDRANTS ARE TO BE PROVIDED, THEY SHALL BE INSTALLED, COMPLETED, AND IN SERVICE PRIOR TO CONSTRUCTION WORK.
4. PER NFPA-1 18.3.4.1; CLEARANCES OF 7.5 FT IN FRONT AND TO THE SIDES OF THE FIRE HYDRANT WITH A 4-FOOT CLEARANCE TO THE REAR MUST BE MAINTAINED AT ALL TIMES.
5. GATED ENTRIES REQUIRE A SIREN OPERATING SYSTEM OR 3M OPTICOM SYSTEM FOR EMERGENCY ACCESS.
6. FIRE HYDRANTS SHALL BE FLOW TESTED AND COLOR CODED BASED ON FLOW RESULTS.

GENERAL LDC NOTES

1. THE SOIL EROSION AND SEDIMENT CONTROL DEVISES SHALL BE INSTALLED PRIOR TO CONSTRUCTION, MAINTAINED THROUGHOUT CONSTRUCTION AND UNTIL THE SITE IS PERMANENTLY STABILIZED. (LDC 902.2)
2. PRIOR TO CONSTRUCTION, A BUILDING PERMIT SHALL BE OBTAINED FOR ALL STRUCTURES THAT HAVE FOOTER, REGARDLESS OF SIZE, THROUGH PASCO COUNTY CENTRAL PERMITTING. (IE. INCLUDING BUT NOT INCLUSIVE BUILDINGS, ACCESSORIES, AND RETAINING WALLS)
3. IT IS THE OWNER'S RESPONSIBILITY OR (CURRENT PARCEL OWNER: PASCO 54, INC., TO INSPECT AND MAINTAIN THE WATER RETENTION SYSTEM ON A REGULAR BASIS. (LDC 902.2.M)
4. ALL SODDED SLOPES OVER 4 TO 1, SHALL BE INSTALLED WITH SOD PEGS. (LDC 902.2)
5. ALL FIRST FLOOR ELEVATIONS (FF) SHALL BE A MINIMUM OF 1' ABOVE THE BASE FLOOD ELEVATION OR AS REQUIRED BY THE LDC1104) 16" ABOVE THE HIGHEST CROWN LINE OF THE STREET LYING BETWEEN THE PROJECTION OF THE SIDE BUILDING LINES(LDC902.2.K).
6. ANY OFF SITE DISTURBANCE SHALL BE RESTORED TO THE PRE OR BETTER CONDITION. (LDC 902.2)
7. AS APPLICABLE, THE OWNER/DEVELOPER WILL PROVIDE COPIES OF THE REQUIRED PERMITS FROM THE RESPECTIVE GOVERNING AGENCIES, PRIOR TO ISSUANCE OF THE SDP. (LDC 902.2.C)
8. ALL WORK WITHIN THE ROW WILL REQUIRE A ROW USE PERMIT. (LDC 406.5)/ DRIVEWAY CONNECTION PERMIT.
9. THE SITE SHALL BE GRADED TO WITHIN 12 INCHES OF THE FINAL GRADE. WHERE FILL IS PROPOSED IT SHALL BE PLACED IN COMPLIANCE WITH THE GEOTECHNICAL/GEOLOGICAL ENGINEERING REPORT RECOMMENDATIONS (INCLUDING ANY LIFT DEPTHS RECOMMENDED) AND COMPACTED TO A MINIMUM DENSITY OF 95% OF THE MODIFIED PROCTOR MAXIMUM DRY DENSITY. DENSITY TESTS TO CONFIRM COMPACTION SHALL BE REQUIRED WITHIN THE BUILDING PAD AREA, BEFORE THE NEXT LIFT IS PLACED. UPON COMPLETION OF THE LAND DEVELOPMENT CONSTRUCTION, A PROFESSIONAL ENGINEER SHALL PROVIDE A CERTIFICATION TO PASCO COUNTY THAT THE PROJECT, INCLUDING EACH PAD AREA, COMPLIES WITH THE RECOMMENDATIONS OF THE GEOTECHNICAL/GEOLOGICAL ENGINEERING REPORT".

PASCO COUNTY STANDARD SITE PLAN NOTES

1. ALL UTILITY CONSTRUCTION SHALL COMPLY WITH THE PASCO COUNTY STANDARDS FOR DESIGN AND CONSTRUCTION OF WATER AND WASTEWATER FACILITIES SPECIFICATIONS, LATEST EDITION.
2. ALL ON-SITE WATER AND SEWER FACILITIES SHALL BE OWNED AND MAINTAINED BY THE OWNER-DEVELOPER.
3. INSTALLATION OF FUEL STORAGE TANKS REQUIRES REVIEW AND APPROVAL BY THE FIRE MARSHAL AND THE ISSUANCE OF A SEPARATE BUILDING PERMIT. APPROVAL OF THE SITE PLAN DOES NOT CONSTITUTE APPROVAL OF THE LOCATION OF THE FUEL TANKS.
4. ALL PROPOSED SIGNS MUST BE APPLIED FOR, APPROVED, AND PERMITTED ON AN INDIVIDUAL BASIS APART FROM ANY ULTIMATELY APPROVED SITE PLAN. APPROVAL OF THIS SITE PLAN DOES NOT CONSTITUTE APPROVAL OF ANY SIGNAGE.
5. HANDICAP PARKING SPACES WILL BE PROPERLY SIGNED AND STRIPED IN ACCORDANCE WITH FLORIDA STATUTE 316, THE MANUAL ON UNIFORM TRAFFIC CONTROL DEVICES, OR OTHER APPLICABLE STANDARDS.
6. THE ARCHITECT/ENGINEER CERTIFIES THAT THE SITE HAS BEEN DESIGNED IN ACCORDANCE WITH THE AMERICANS WITH DISABILITIES ACT.
7. ALL ON-SITE PARKING SPACES WILL BE STRIPED AND SIGNED IN ACCORDANCE WITH THE MANUAL ON UNIFORM TRAFFIC CONTROL DEVICES, LATEST EDITION. PARKING SPACES, DIRECTIONAL ARROWS, AND STOP BARS SHALL BE STRIPED IN WHITE. IT SHALL BE THE OWNER/DEVELOPER'S RESPONSIBILITY TO PROPERLY SIGN AND STRIPE IN ACCORDANCE WITH APPLICABLE STANDARDS.
8. THE OWNER/DEVELOPER ACKNOWLEDGES THAT THIS APPROVAL DOES NOT INCLUDE ANY WORK IN THE COUNTY RIGHT-OF-WAY. ALL RIGHT-OF-WAY WORK SHALL BE A FUNCTION OF AN APPROVED PASCO RIGHT-OF-WAY USE PERMIT.
9. ALL CLEAR-SITE AREAS SHALL BE KEPT FREE OF ANY SIGNAGE PLANTINGS, TREES, ETC. IN EXCESS OF THREE-AND-A-HALF (3-1/2) FEET IN HEIGHT.
10. NO IRRIGATION SYSTEM OR LANDSCAPING SHALL BE INSTALLED IN ANY COUNTY OR STATE RIGHT-OF-WAY WITHOUT ISSUANCE OF APPROPRIATE RIGHT-OF-WAY USE PERMIT.
11. THE OWNER/DEVELOPER ACKNOWLEDGES THAT THE SITE AND ITS SUBSEQUENT BUILDING PERMITS SHALL COMPLY WITH ALL REZONING/MPUD/PUD CONDITIONS.
12. ALL STRUCTURES, INCLUDING BUFFER WALLS, RETAINING WALLS, SIGNAGE, ETC. REQUIRE BUILDING PERMITS.

ADDITIONAL INSPECTION NOTE

1. CONTRACTOR SHALL ADHERE TO ALL APPLICABLE REQUIREMENTS OF THE PASCO COUNTY ENGINEETING SERVICES DEPARTMENT TESTING SPECIFICATIONS FOR CONSTRUCTION OF ROADS, STORM, DRAINAGE, AND UTILITIES (LATEST EDITION).

Call 48 hours before you dig!
IT'S THE LAW!
1-800-432-4770

NO.	DATE	DESCRIPTION	BY
1.	02-02-15	Revisions Per County Comments	ELR
2.	03-03-15	SWFWMD Resubmittal	ELR
3.	03-08-15	Access connection and Sidewalk	JAC
4.	08-07-15	County Resubmittal	ELR
5.	09-22-15	County Resubmittal - Address Comments Mod 1	ELR
6.			
7.			
8.			
9.			

REVISIONS

Engineering ~ Planning
Environmental Science
4260 West Linebaugh Avenue
Tampa, Florida 33624
Phone: 813.265.3130 Fax: 813.265.6610
www.wraengineering.com CA 00007652

DRAWING
GENERAL NOTES
DESIGNED: JAC DRAWN: ELR APPROVED: JAC

PROJECT
CYPRESS CREEK
TOWN CENTER NORTH
JOB #: 0967 DATUM: NGVD 1929

JOSEPH A. CIMINO
FL P.E. # 67540

Original Date: 07-14-14
Sheet
G-101

CAD File Name: S:\~PROJECT FILES\0967 - PASCO 54 INC. - CCTC NORTH\CADD\PLANS\G-101_GENERAL_NOTES.DWG
Plot Date: 9/23/2015 11:49:47 AM
2012 Water Resource Associates, Inc.

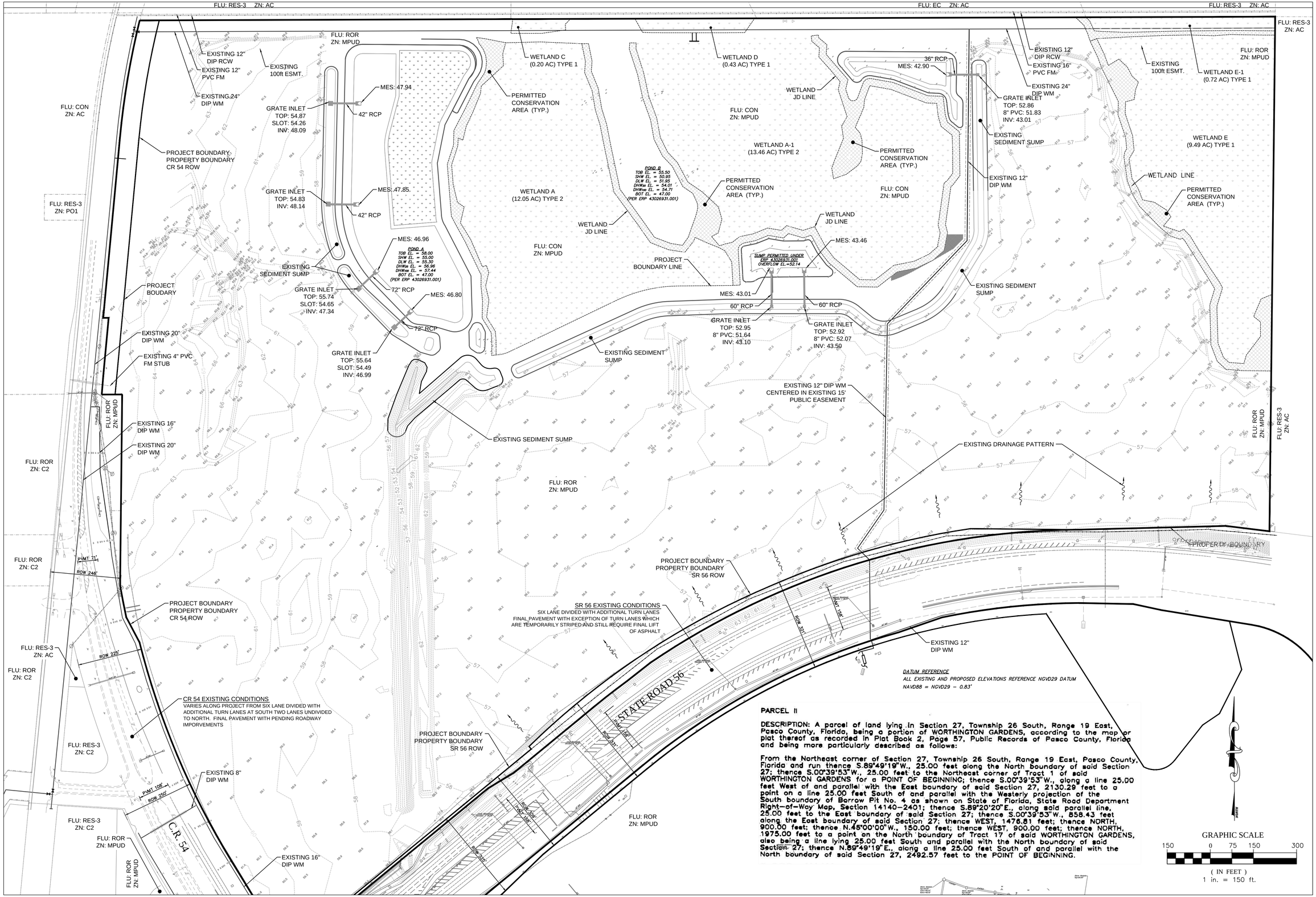

PARCEL II

DESCRIPTION: A parcel of land lying in Section 27, Township 26 South, Range 19 East, Pasco County, Florida, being a portion of WORTHINGTON GARDENS, according to the map or plat thereof as recorded in Plat Book 2, Page 57, Public Records of Pasco County, Florida and being more particularly described as follows:

From the Northeast corner of Section 27, Township 26 South, Range 19 East, Pasco County, Florida and run thence S.89°49'19"W., 25.00 feet along the North boundary of said Section 27; thence S.00°39'53"W., 25.00 feet to the Northeast corner of Tract 1 of said WORTHINGTON GARDENS for a POINT OF BEGINNING; thence S.00°39'53"W., along a line 25.00 feet West of and parallel with the East boundary of said Section 27, 2130.29 feet to a point on a line 25.00 feet South of and parallel with the Westerly projection of the South boundary of Borrow Pit No. 4 as shown on State of Florida, State Road Department Right-of-Way Map, Section 14140-2401; thence S.89°20'20"E., along said parallel line, 25.00 feet to the East boundary of said Section 27; thence S.00°39'53"W., 858.43 feet along the East boundary of said Section 27; thence WEST, 1476.81 feet; thence NORTH, 900.00 feet; thence N.45°00'00"W., 150.00 feet; thence WEST, 900.00 feet; thence NORTH, 1975.00 feet to a point on the North boundary of Tract 17 of said WORTHINGTON GARDENS, also being a line lying 25.00 feet South and parallel with the North boundary of said Section 27; thence N.89°49'19"E., along a line 25.00 feet South of and parallel with the North boundary of said Section 27, 2492.57 feet to the POINT OF BEGINNING.

REVISIONS

NO.	DATE	DESCRIPTION	BY
1.	02-02-15	Revisions Per County Comments	ELR
2.	03-03-15	SWFWMD Resubmittal	ELR
3.	04-24-15	Revisions Per Comments	ELR
4.	08-07-15	County Resubmittal - Detached Sidewalk	ELR
5.	09-22-15	County Resubmittal - Address Comments Mod 1	ELR
6.			
7.			
8.			
9.			

Engineering ~ Planning
Environmental Science
4260 West Linebaugh Avenue
Tampa, Florida 33624
Phone: 813.265.3130 Fax: 813.265.6610
www.wraengineering.com CA 00007652

DRAWING: EXISTING CONDITIONS

DESIGNED: JAC DRAWN: ELR APPROVED: JAC

PROJECT: CYPRESS CREEK TOWN CENTER NORTH

JOB #: 0967 DATUM: NGVD 1929

JOSEPH A. CIMINO FL P.E. # 67540

Original Date: 07-14-14

Sheet

G-102

CAD File Name: S:\--PROJECT FILES\0967 - PASCO 54 INC. - CCTC NORTH\CADD\PLANS\G-102_EXISTING_CONDITIONS.DWG

Plot Date: 9/22/2015 11:50:22 AM

2012 Water Resource Associates, Inc.

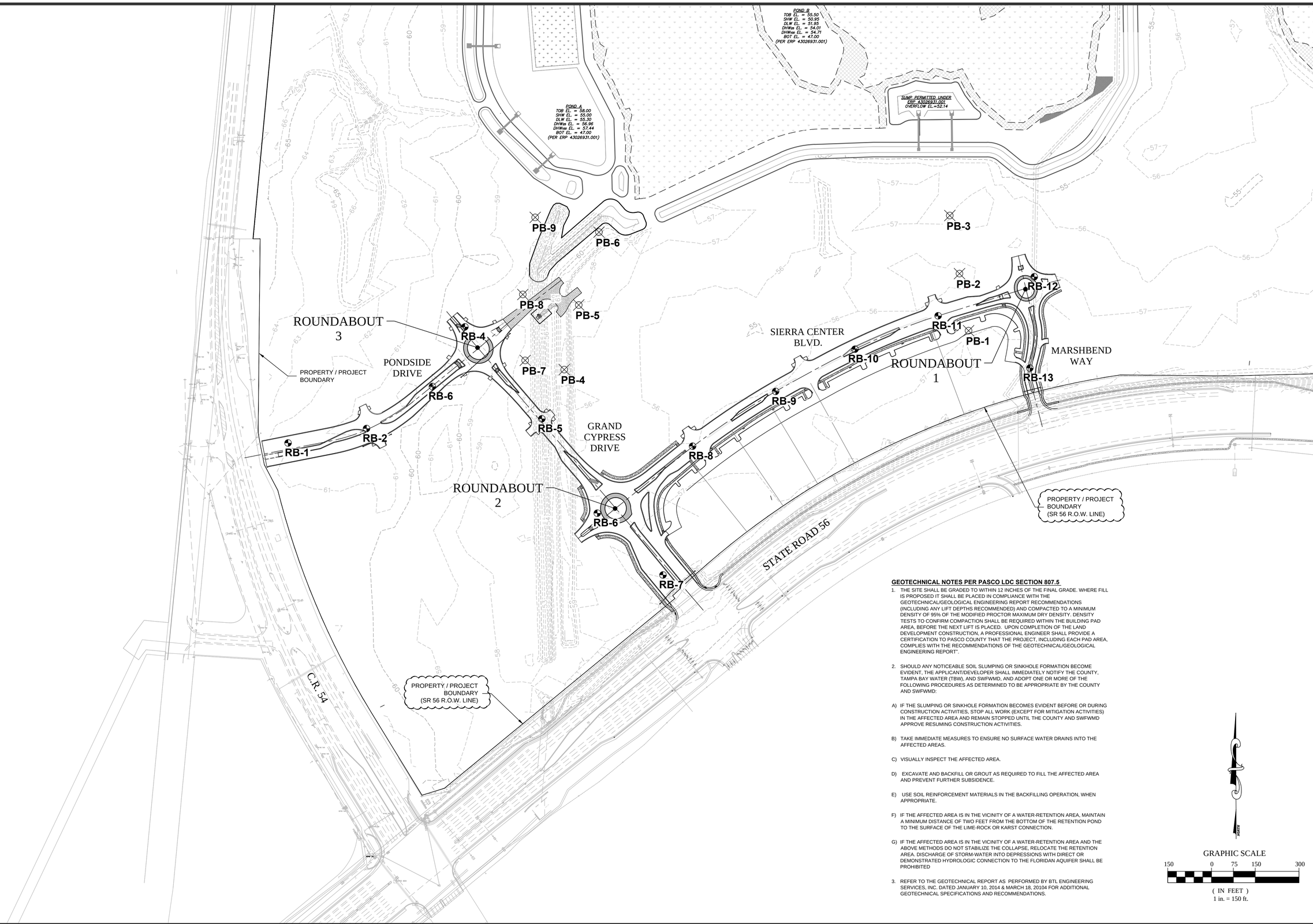

GEOTECHNICAL NOTES PER PASCO LDC SECTION 807.5

1. THE SITE SHALL BE GRADED TO WITHIN 12 INCHES OF THE FINAL GRADE. WHERE FILL IS PROPOSED IT SHALL BE PLACED IN COMPLIANCE WITH THE GEOTECHNICAL/GEOLOGICAL ENGINEERING REPORT RECOMMENDATIONS (INCLUDING ANY LIFT DEPTHS RECOMMENDED) AND COMPACTED TO A MINIMUM DENSITY OF 95% OF THE MODIFIED PROCTOR MAXIMUM DRY DENSITY. DENSITY TESTS TO CONFIRM COMPACTION SHALL BE REQUIRED WITHIN THE BUILDING PAD AREA, BEFORE THE NEXT LIFT IS PLACED. UPON COMPLETION OF THE LAND DEVELOPMENT CONSTRUCTION, A PROFESSIONAL ENGINEER SHALL PROVIDE A CERTIFICATION TO PASCO COUNTY THAT THE PROJECT, INCLUDING EACH PAD AREA, COMPLIES WITH THE RECOMMENDATIONS OF THE GEOTECHNICAL/GEOLOGICAL ENGINEERING REPORT".

2. SHOULD ANY NOTICEABLE SOIL SLUMPING OR SINKHOLE FORMATION BECOME EVIDENT, THE APPLICANT/DEVELOPER SHALL IMMEDIATELY NOTIFY THE COUNTY, TAMPA BAY WATER (TBW), AND SWFWMD, AND ADOPT ONE OR MORE OF THE FOLLOWING PROCEDURES AS DETERMINED TO BE APPROPRIATE BY THE COUNTY AND SWFWMD:

A) IF THE SLUMPING OR SINKHOLE FORMATION BECOMES EVIDENT BEFORE OR DURING CONSTRUCTION ACTIVITIES, STOP ALL WORK (EXCEPT FOR MITIGATION ACTIVITIES) IN THE AFFECTED AREA AND REMAIN STOPPED UNTIL THE COUNTY AND SWFWMD APPROVE RESUMING CONSTRUCTION ACTIVITIES.

B) TAKE IMMEDIATE MEASURES TO ENSURE NO SURFACE WATER DRAINS INTO THE AFFECTED AREAS.

C) VISUALLY INSPECT THE AFFECTED AREA.

D) EXCAVATE AND BACKFILL OR GROUT AS REQUIRED TO FILL THE AFFECTED AREA AND PREVENT FURTHER SUBSIDENCE.

E) USE SOIL REINFORCEMENT MATERIALS IN THE BACKFILLING OPERATION, WHEN APPROPRIATE.

F) IF THE AFFECTED AREA IS IN THE VICINITY OF A WATER-RETENTION AREA, MAINTAIN A MINIMUM DISTANCE OF TWO FEET FROM THE BOTTOM OF THE RETENTION POND TO THE SURFACE OF THE LIME-ROCK OR KARST CONNECTION.

G) IF THE AFFECTED AREA IS IN THE VICINITY OF A WATER-RETENTION AREA AND THE ABOVE METHODS DO NOT STABILIZE THE COLLAPSE, RELOCATE THE RETENTION AREA. DISCHARGE OF STORM-WATER INTO DEPRESSIONS WITH DIRECT OR DEMONSTRATED HYDROLOGIC CONNECTION TO THE FLORIDAN AQUIFER SHALL BE PROHIBITED

3. REFER TO THE GEOTECHNICAL REPORT AS PERFORMED BY BTL ENGINEERING SERVICES, INC. DATED JANUARY 10, 2014 & MARCH 18, 20104 FOR ADDITIONAL GEOTECHNICAL SPECIFICATIONS AND RECOMMENDATIONS.

NORTH

GRAPHIC SCALE

150 0 75 150 300

(IN FEET)
1 in. = 150 ft.

REVISIONS

NO.	DATE	DESCRIPTION	BY
1.	02-02-15	Revisions Per County Comments	ELR
2.	02-04-15	ROW/WD Resubmittal	ELR
3.	03-08-15	Access Connection/Sidewalk	JAC
4.	08-07-15	County Resubmittal	ELR
5.	09-22-15	County Resubmittal - Address Comments Mod 1	ELR
6.			
7.			
8.			
9.			

Engineering ~ Planning
Environmental Science
4260 West Linebaugh Avenue
Tampa, Florida 33624
Phone: 813.265.3130 Fax: 813.265.6610
www.wraengineering.com CA 00007652

DRAWING

BORING LOCATION MAP

DESIGNED:JAC DRAWN:ELR APPROVED:JAC

PROJECT

CYPRESS CREEK
TOWN CENTER NORTH

JOB #:0967 DATUM: NGVD 1929

JOSEPH A. CIMINO
FL P.E. # 67540

Original Date: 07-14-14

Sheet

G-103

2012 Water Resource Associates, Inc. Plot Date: 9/23/2015 11:50:47 AM CAD File Name: S:\~PROJECT FILES\0967 - PASCO 54 INC. - CCTC NORTH\CADD\PLANS\G-103_BORING_MAP.DWG

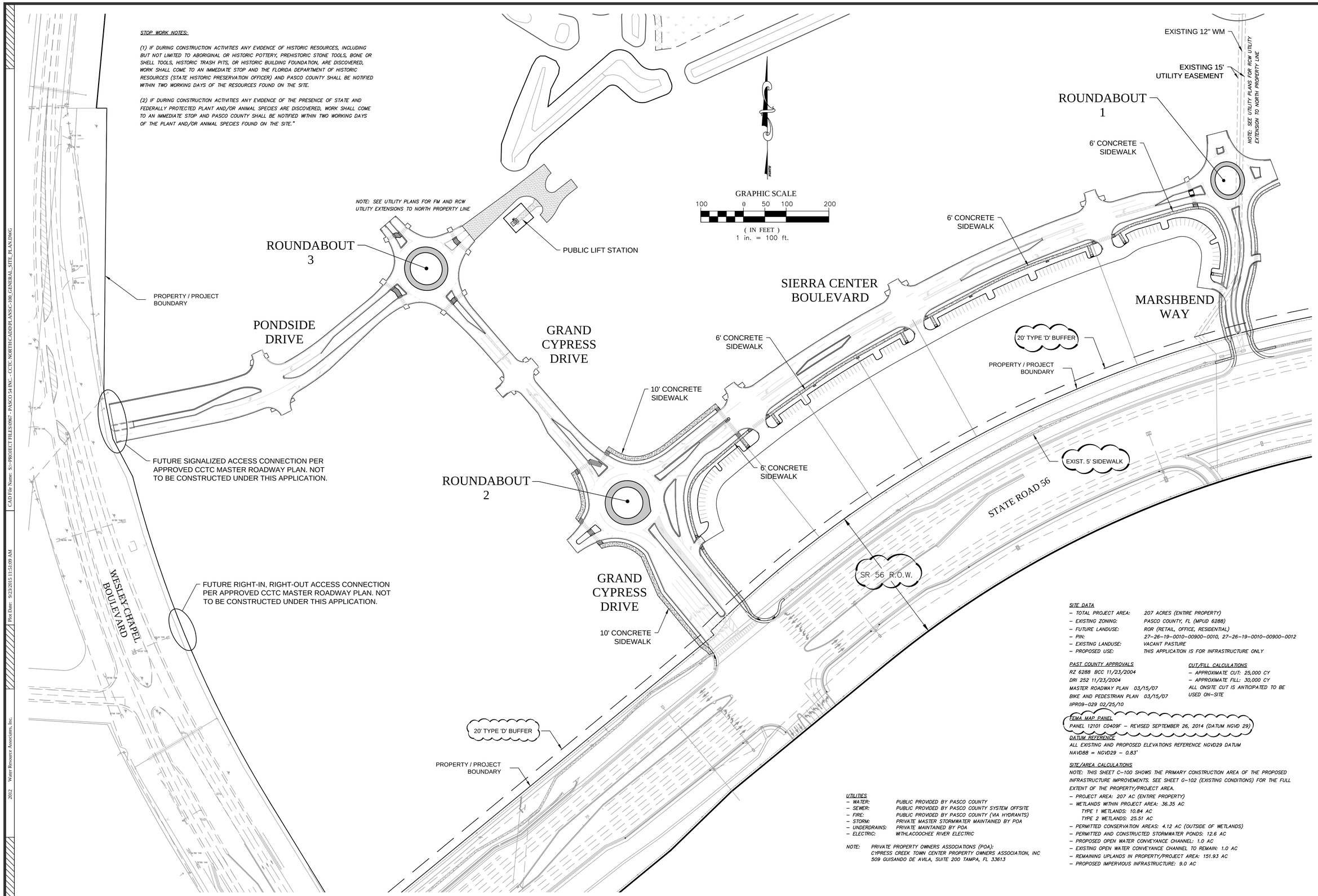

SITE DATA

- TOTAL PROJECT AREA: 207 ACRES (ENTIRE PROPERTY)
- EXISTING ZONING: PASCO COUNTY, FL (MPUD 6288)
- FUTURE LANDUSE: ROR (RETAIL, OFFICE, RESIDENTIAL)
- PIN: 27-26-19-0010-00900-0010, 27-26-19-0010-00900-0012
- EXISTING LANDUSE: VACANT PASTURE
- PROPOSED USE: THIS APPLICATION IS FOR INFRASTRUCTURE ONLY

PAST COUNTY APPROVALS

RZ 6288 BCC 11/23/2004
DRI 252 11/23/2004
MASTER ROADWAY PLAN 03/15/07
BIKE AND PEDESTRIAN PLAN 03/15/07
IIPR09-029 02/25/10

CUT/FILL CALCULATIONS

- APPROXIMATE CUT: 25,000 CY
- APPROXIMATE FILL: 30,000 CY

ALL ONSITE CUT IS ANTICIPATED TO BE USED ON-SITE

FEMA MAP PANEL

PANEL 12101 C0409F – REVISED SEPTEMBER 26, 2014 (DATUM NGVD 29)

DATUM REFERENCE

ALL EXISTING AND PROPOSED ELEVATIONS REFERENCE NGVD29 DATUM
NAVD88 = NGVD29 – 0.83'

SITE/AREA CALCULATIONS

NOTE: THIS SHEET C-100 SHOWS THE PRIMARY CONSTRUCTION AREA OF THE PROPOSED INFRASTRUCTURE IMPROVEMENTS. SEE SHEET G-102 (EXISTING CONDITIONS) FOR THE FULL EXTENT OF THE PROPERTY/PROJECT AREA.

- PROJECT AREA: 207 AC (ENTIRE PROPERTY)
- WETLANDS WITHIN PROJECT AREA: 36.35 AC
  - TYPE 1 WETLANDS: 10.84 AC
  - TYPE 2 WETLANDS: 25.51 AC
- PERMITTED CONSERVATION AREAS: 4.12 AC (OUTSIDE OF WETLANDS)
- PERMITTED AND CONSTRUCTED STORMWATER PONDS: 12.6 AC
- PROPOSED OPEN WATER CONVEYANCE CHANNEL: 1.0 AC
- EXISTING OPEN WATER CONVEYANCE CHANNEL TO REMAIN: 1.0 AC
- REMAINING UPLANDS IN PROPERTY/PROJECT AREA: 151.93 AC
- PROPOSED IMPERVIOUS INFRASTRUCTURE: 9.0 AC

UTILITIES

- WATER: PUBLIC PROVIDED BY PASCO COUNTY
- SEWER: PUBLIC PROVIDED BY PASCO COUNTY SYSTEM OFFSITE
- FIRE: PUBLIC PROVIDED BY PASCO COUNTY (WA HYDRANTS)
- STORM: PRIVATE MASTER STORMWATER MAINTAINED BY POA
- UNDERDRAINS: PRIVATE MAINTAINED BY POA
- ELECTRIC: WITHLACOOCHEE RIVER ELECTRIC

NOTE: PRIVATE PROPERTY OWNERS ASSOCIATIONS (POA):
CYPRESS CREEK TOWN CENTER PROPERTY OWNERS ASSOCIATION, INC
509 GUISANDO DE AVILA, SUITE 200 TAMPA, FL 33613

REVISIONS

NO.	DATE	DESCRIPTION	BY
1.	02-02-15	Revisions Per County Comments	ELR
2.	03-03-15	SWFWMD Resubmittal	ELR
3.	06-05-15	Access connection and Sidewalk	ELR
4.	08-07-15	County Resubmittal	ELR
5.	09-22-15	County Resubmittal - Address Comments Mod 1	ELR
6.			
7.			
8.			
9.			

Engineering ~ Planning
Environmental Science
4260 West Linebaugh Avenue
Tampa, Florida 33624
Phone: 813.265.3130 Fax: 813.265.6610
www.wraengineering.com CA 00007652

DRAWING: GENERAL SITE PLAN

DESIGNED: JAC DRAWN: ELR APPROVED: JAC

PROJECT: CYPRESS CREEK TOWN CENTER NORTH

JOB #: 0967 DATUM: NGVD 1929

JOSEPH A. CIMINO
FL P.E. # 67540

Original Date: 07-14-14

Sheet

C-100

2012 Water Resource Associates, Inc. Plot Date: 9/23/2015 11:51:09 AM CAD File Name: S:\--PROJECT FILES\0967 - PASCO 54 INC. - CCTC NORTH\CADD\PLANS\C-100_GENERAL_SITE_PLAN.DWG

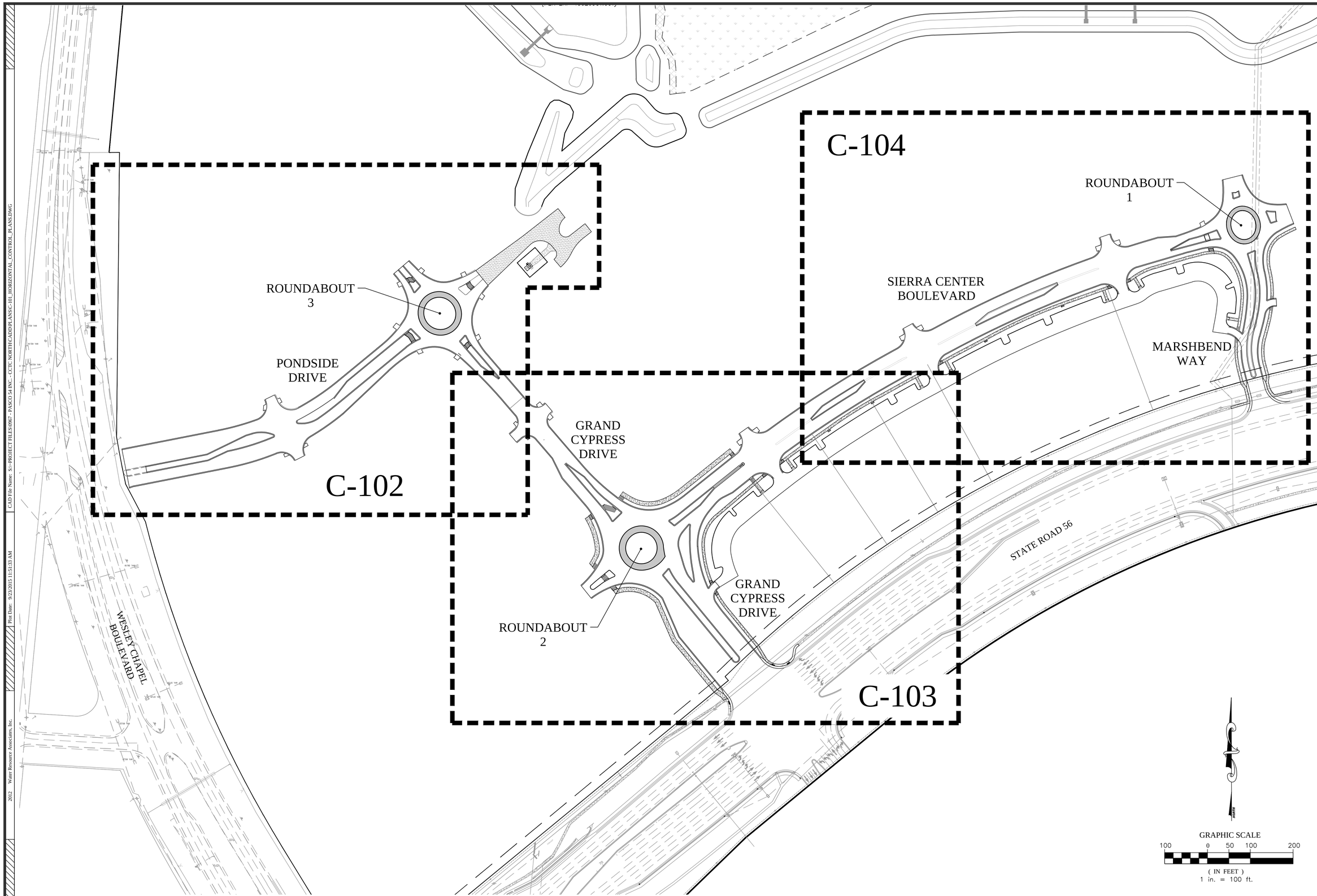

2012 Water Resource Associates, Inc. Plot Date: 9/23/2015 11:51:33 AM CAD File Name: S:\~PROJECT FILES\0967 - PASCO 54 INC. - CCTC NORTH\CADD\PLANS\C-101_HORIZONTAL_CONTROL_PLANS.DWG

REVISIONS

NO.	DATE	DESCRIPTION	BY
1.	02-02-15	Revisions Per County Comments	ELR
2.	03-03-15	SWFWMD Resubmittal	ELR
3.	03-05-15	Access connection and Sidewalk	JAC
4.	08-07-15	County Resubmittal	ELR
5.	09-22-15	County Resubmittal - Address Comments Mod 1	ELR
6.			
7.			
8.			
9.			

Engineering ~ Planning
Environmental Science
4260 West Linebaugh Avenue
Tampa, Florida 33624
Phone: 813.265.3130 Fax: 813.265.6610
www.wraengineering.com CA 00007652

DRAWING
OVERALL HORIZONTAL CONTROL PLAN
DESIGNED: JAC DRAWN: ELR APPROVED: JAC

PROJECT
CYPRESS CREEK TOWN CENTER NORTH
JOB #: 0967 DATUM: NGVD 1929

JOSEPH A. CIMINO
FL P.E. # 67540

Original Date: 07-14-14
Sheet
C-101

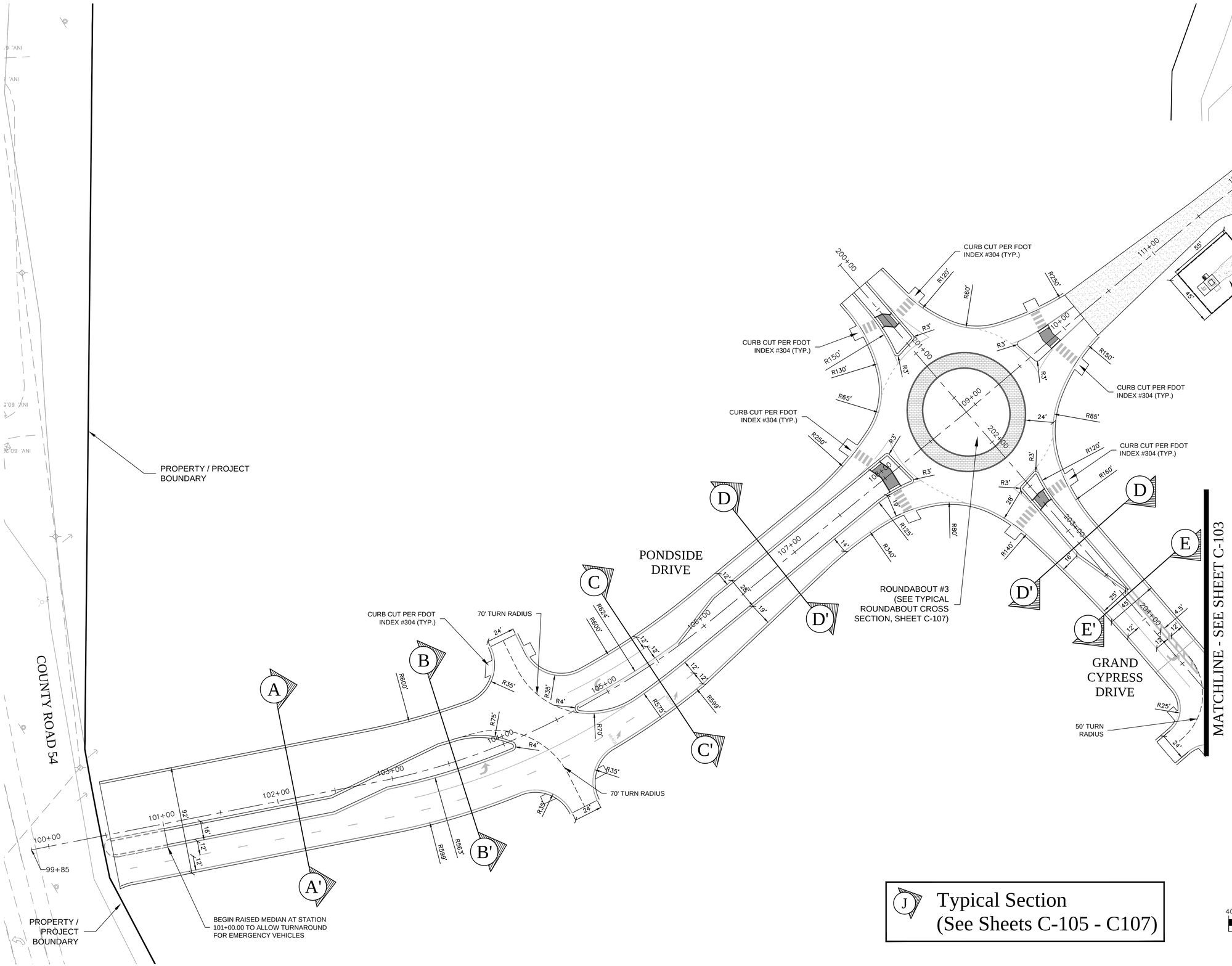

J Typical Section (See Sheets C-105 - C107)

GRAPHIC SCALE
40 0 20 40 80
(IN FEET)
1 in. = 40 ft.

REVISIONS			
NO.	DATE	DESCRIPTION	BY
1.	02-02-15	Revisions Per County Comments	ELR
2.	03-03-15	SWFWMD Resubmittal	ELR
3.	06-05-15	Access connection and Sidewalk	ELR
4.	08-07-15	County Resubmittal	ELR
5.	09-22-15	County Resubmittal - Address Comments Mod 1	ELR
6.			
7.			
8.			
9.			

Engineering ~ Planning
Environmental Science
4260 West Linebaugh Avenue
Tampa, Florida 33624
Phone: 813.265.3130 Fax: 813.265.6610
www.wraengineering.com CA 00007652

DRAWING: HORIZONTAL CONTROL PLANS
DESIGNED: JAC DRAWN: ELR APPROVED: JAC

PROJECT: CYPRESS CREEK TOWN CENTER NORTH
JOB #: 0967 DATUM: NGVD 1929

JOSEPH A. CIMINO
FL P.E. # 67540

Original Date: 07-14-14
Sheet
C-102

2012 Water Resource Associates, Inc. Plot Date: 9/23/2015 11:51:39 AM CAD File Name: S:--PROJECT FILES\0967 - PASCO 54 INC. - CCTC NORTH\CADD\PLANS\C-101_HORIZONTAL_CONTROL_PLANS.DWG

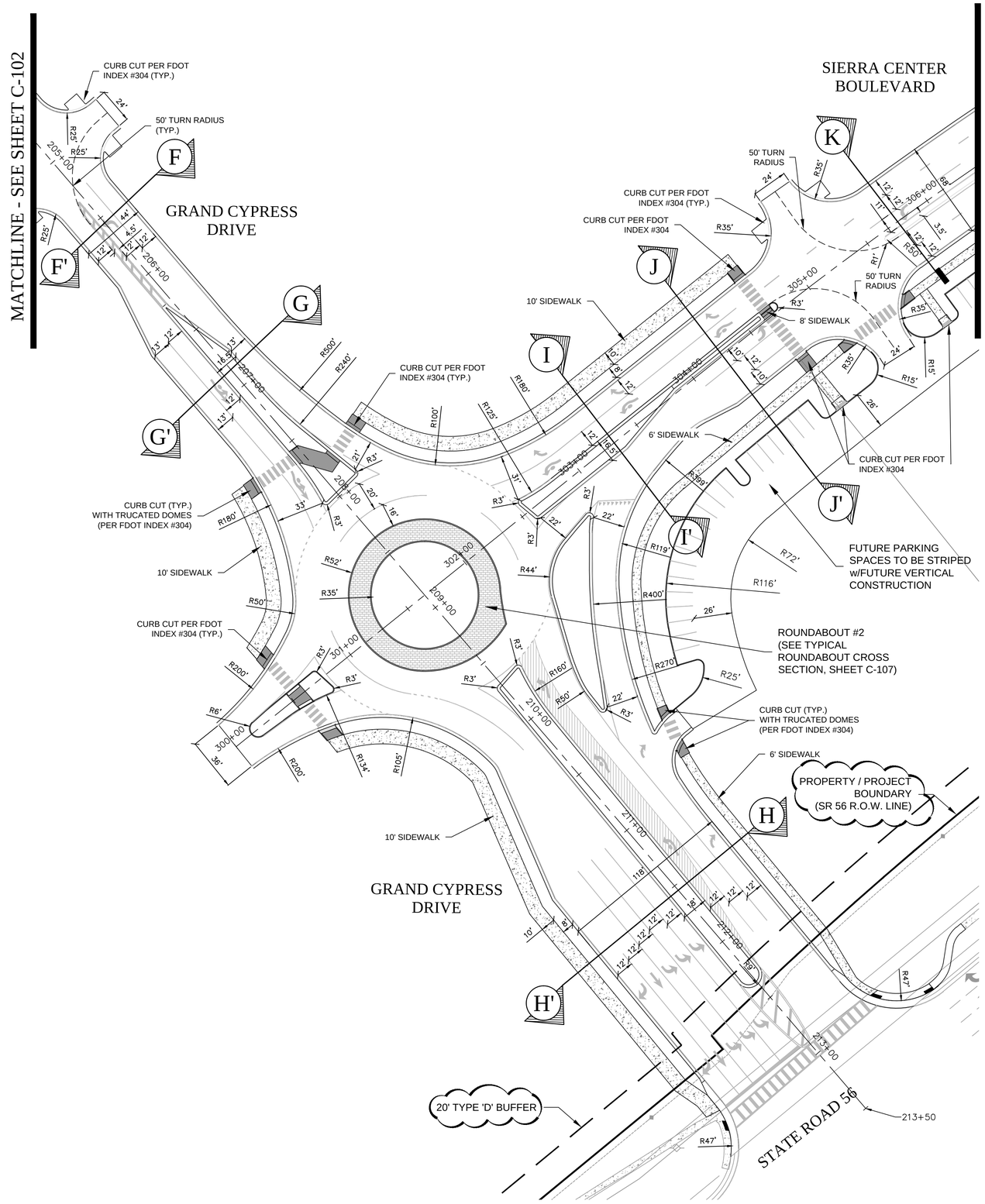

J Typical Section (See Sheets C-105 - C107)

GRAPHIC SCALE

40 0 20 40 80

(IN FEET)
1 in. = 40 ft.

REVISIONS			
NO.	DATE	DESCRIPTION	BY
1.	02-02-15	Revisions Per County Comments	ELR
2.	03-03-15	SWFWMD Resubmittal	ELR
3.	03-04-15	Accommodate Sidewalk	ELR
4.	08-07-15	County Resubmittal	ELR
5.	09-22-15	County Resubmittal - Address Comments Mod 1	ELR
6.			
7.			
8.			
9.			

Engineering ~ Planning
Environmental Science
4260 West Linebaugh Avenue
Tampa, Florida 33624
Phone: 813.265.3130 Fax: 813.265.6610
www.wraengineering.com CA 00007652

DRAWING: HORIZONTAL CONTROL PLANS

DESIGNED: JAC DRAWN: ELR APPROVED: JAC

PROJECT: CYPRESS CREEK TOWN CENTER NORTH

JOB #: 0967 DATUM: NGVD 1929

JOSEPH A. CIMINO
FL P.E. # 67540

Original Date: 07-14-14

Sheet

C-103

2012 Water Resource Associates, Inc. Plot Date: 9/22/2015 11:51:44 AM CAD File Name: S:\~PROJECT FILES\0967 - PASCO 54 INC. - CCTC NORTHCADD\PLANS\C-101_HORIZONTAL_CONTROL_PLANS.DWG

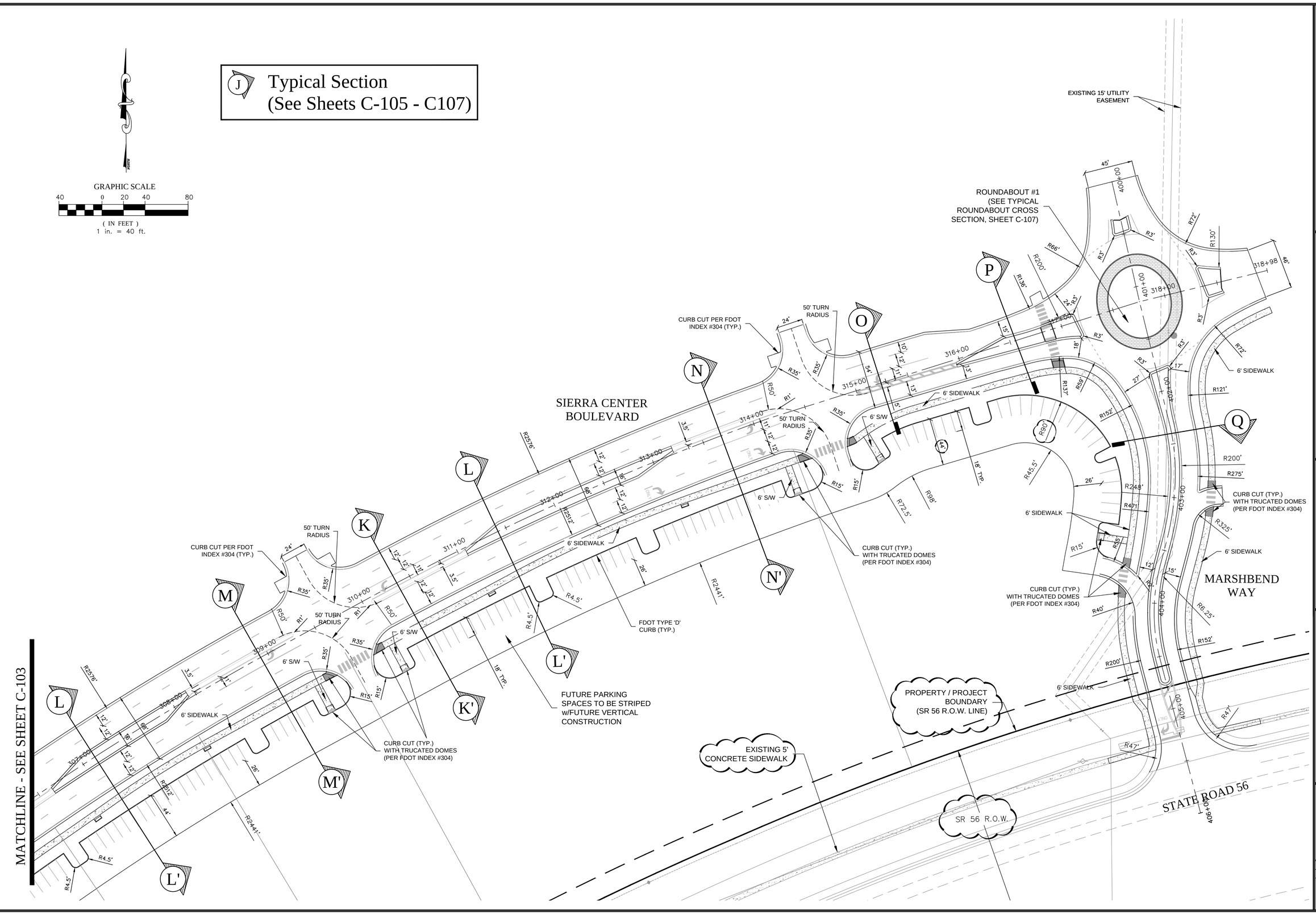

REVISIONS

NO.	DATE	DESCRIPTION	BY
1.	02-02-15	Revisions Per County Comments	ELR
2.	03-03-15	SWFWMD Resubmittal	ELR
3.	06-04-15	Access connection and Sidewalk	JAC
4.	08-07-15	County Resubmittal	ELR
5.	09-22-15	County Resubmittal - Address Comments Mod 1	ELR
6.			
7.			
8.			
9.			

Engineering ~ Planning
Environmental Science
4260 West Linebaugh Avenue
Tampa, Florida 33624
Phone: 813.265.3130 Fax: 813.265.6610
www.wraengineering.com CA 00007652

DRAWING
HORIZONTAL CONTROL PLANS
DESIGNED: JAC DRAWN: ELR APPROVED: JAC

PROJECT
CYPRESS CREEK TOWN CENTER NORTH
JOB #: 0962 DATUM: NGVD 1929

JOSEPH A. CIMINO
FL P.E. # 67540

Original Date: 07-14-14
Sheet
C-104

2012 Water Resource Associates, Inc. Plot Date: 9/23/2015 11:51:49 AM CAD File Name: S:\~PROJECT FILES\0962 - PASCO 54 INC. - CCTC NORTH\CADD\PLANS\C-101_HORIZONTAL_CONTROL_PLANS.DWG

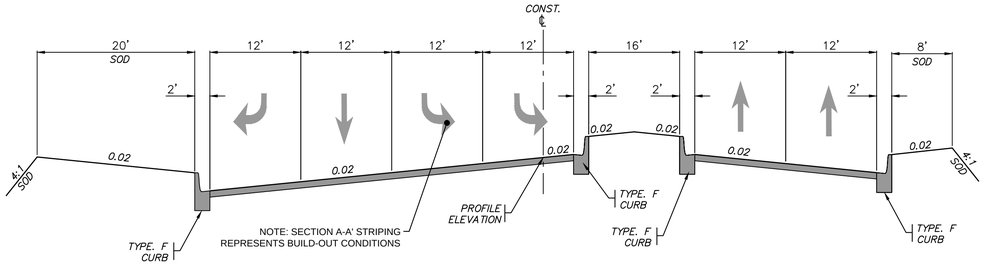

TYPICAL SECTION
A-A'

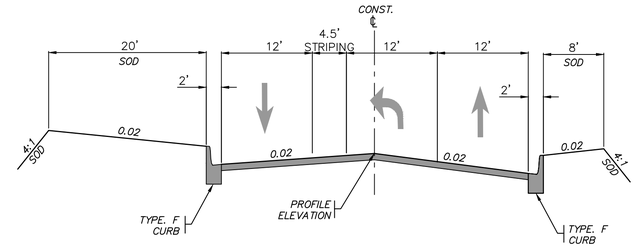

TYPICAL SECTION
E-E'

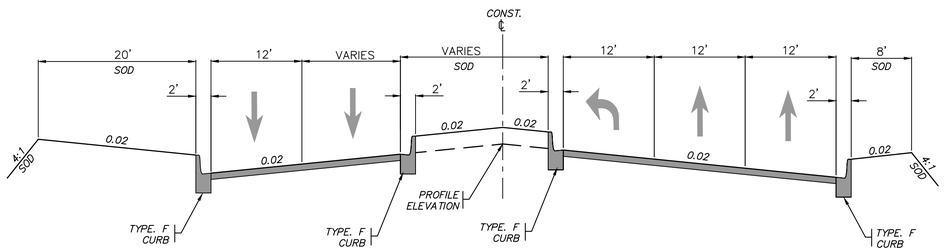

TYPICAL SECTION
B-B'

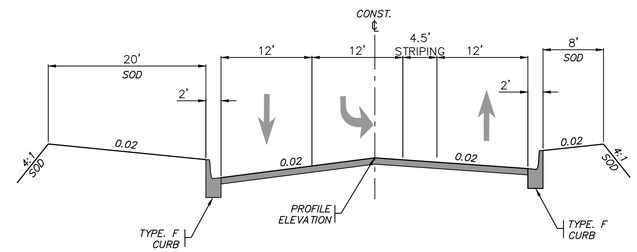

TYPICAL SECTION
F-F'

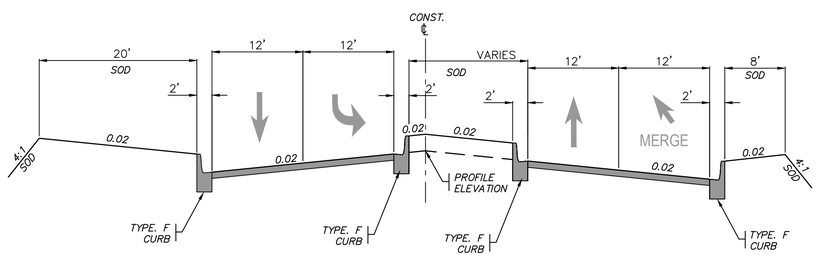

TYPICAL SECTION
C-C'

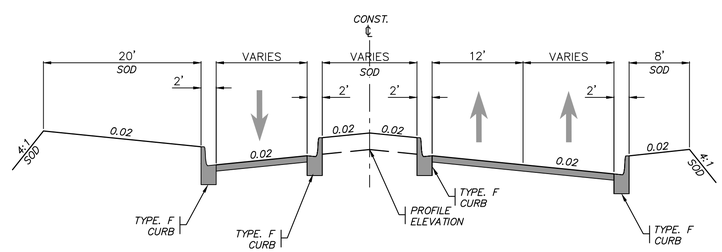

TYPICAL SECTION
G-G'

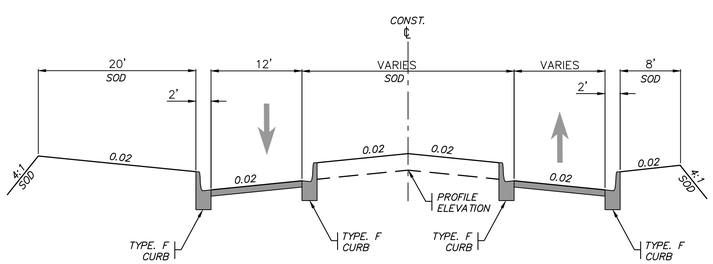

TYPICAL SECTION
D-D'

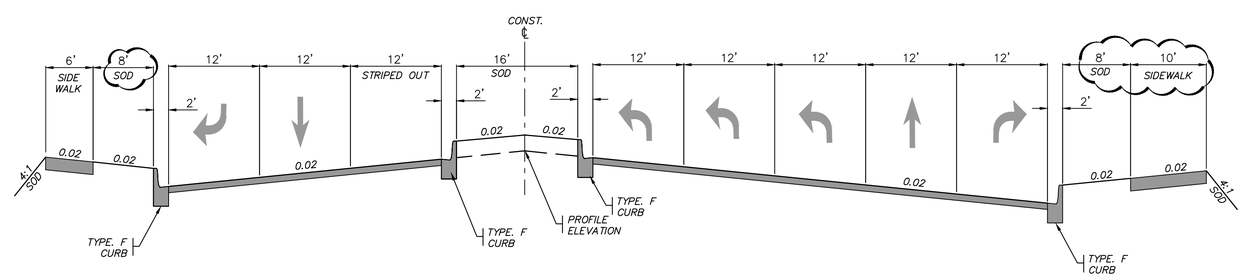

TYPICAL SECTION
H-H'

PAVEMENT SN CALCULATIONS

3" TYPE S-1 @ SN: 0.44 = 1.32
8" CRUSHED CONCRETE LBR 150 @ SN: 0.15 = 1.20
12" TYPE B STAB. SUBGRADE LBR 40 @ SN: 0.08 = 0.96
TOTAL SN = 3.48

TYPICAL ROADWAY SECTION NOTES

(1) BELOW THE STABILIZED SUBGRADE A MINIMUM OF TWO FEET OF SELECT MATERIAL, CONSISTING OF A-3 (SP) SOIL WITH A MAXIMUM 15 PERCENT PASSING NUMBER 200 SIEVE, SHALL BE PROVIDED.

(2) THE ENGINEER RESPONSIBLE FOR THE PROJECT SHALL CERTIFY TO THE COUNTY ENGINEERING SERVICES DIRECTOR (THRU PC ENGINEERING INSPECTIONS) THAT THE SELECT MATERIAL MEETS THESE STANDARDS PRIOR TO INSTALLATION OF THE BASE. CERTIFICATION SHALL STRICTLY COMPLY WITH THE SUBGRADE CERTIFICATION FORM AVAILABLE IN "ENGINEERING SERVICES DEPARTMENT: A PROCEDURAL GUIDE FOR THE PREPARATION OF ASSURANCES OF COMPLETION AND MAINTENANCE."

(3) CRUSHED CONCRETE (LBR 150) SHALL BE COMPACTED TO 100% T-180. THE CRUSHED CONCRETE BASE MATERIAL GRADATION SHALL CONFORM TO FDOT STANDARD SPECIFICATION FOR ROAD AND BRIDGE CONSTRUCTION SECTIONS 204 AND 901. THE CRUSHED CONCRETE SHALL ALSO CONFORM TO THE CRUSHED CONCRETE SPECIFICATIONS CONTAINED IN THE PASCO COUNTY TRANSPORTATION TECHNICAL MANUAL.

(4) THESE PLANS SHALL CERTIFY THAT THE ROADWAY SYTEM IS IN SUBSTANTIAL CONFORMANCE WITH THE "MANUAL OF UNIFORM MINIMUM STANDARDS FOR DESIGN, CONSTRUCTION, AND MAINTENANCE OF STREET AND HIGHWAYS, STATE OF FLORIDA", IN EFFECT AT THE TIME THE PLANS WERE PREPARED.

REVISIONS

NO.	DATE	DESCRIPTION	BY
1.	02-02-15	Revisions Per County Comments	ELR
2.	03-03-15	SWFWMD Resubmittal	ELR
3.	06-04-15	Access Comments	ELR
4.	08-07-15	County Resubmittal	ELR
5.	09-22-15	County Resubmittal - Address Comments Mod 1	ELR
6.			
7.			
8.			
9.			

Engineering ~ Planning
Environmental Science
4260 West Linebaugh Avenue
Tampa, Florida 33624
Phone: 813.265.3130 Fax: 813.265.6610
www.wraengineering.com CA 00007652

DRAWING
TYPICAL ROADWAY SECTIONS

DESIGNED: JAC DRAWN: ELR APPROVED: JAC

PROJECT
CYPRESS CREEK TOWN CENTER NORTH

JOB #: 0967 DATUM: NGVD 1929

JOSEPH A. CIMINO
FL P.E. # 67540

Original Date: 07-14-14
Sheet
C-105

2012 Water Resource Associates, Inc. Plot Date: 9/22/2015 11:52:01 AM CAD File Name: S:--PROJECT FILES\0967 - PASCO 54 INC. - CCTC NORTH\CADD\PLANS\C-105_TYPICAL_ROADWAY_SECTIONS.DWG

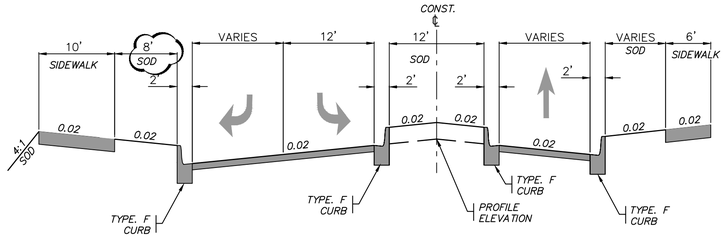

TYPICAL SECTION
I-I'

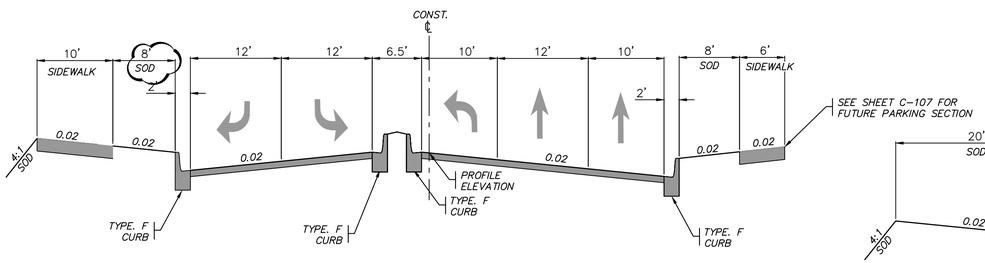

TYPICAL SECTION
J-J'

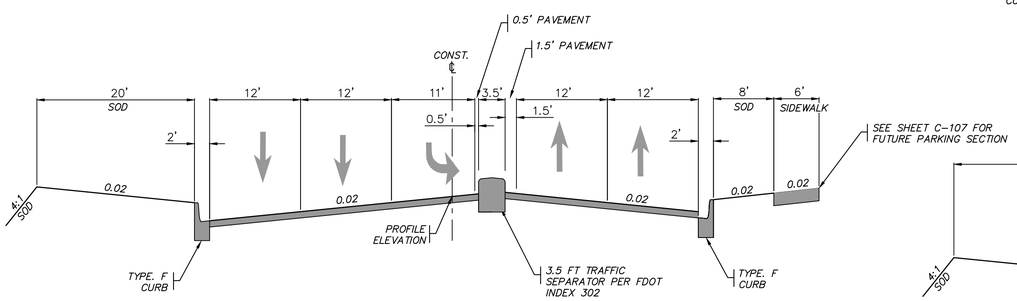

TYPICAL SECTION
K-K'

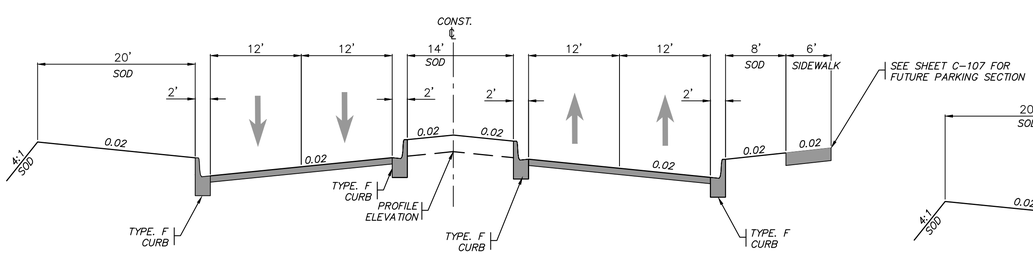

TYPICAL SECTION
L-L'

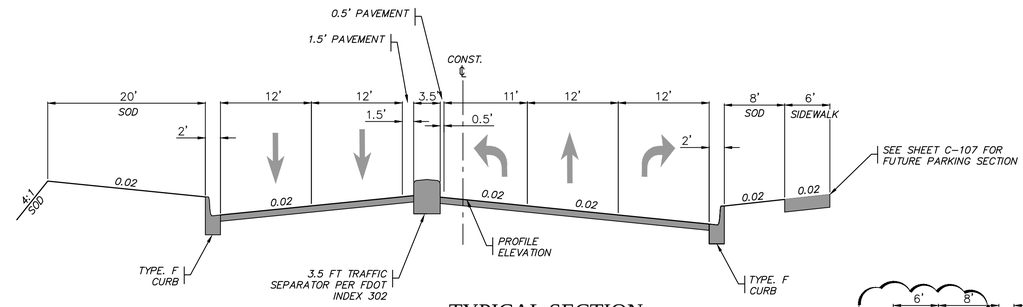

TYPICAL SECTION
M-M'

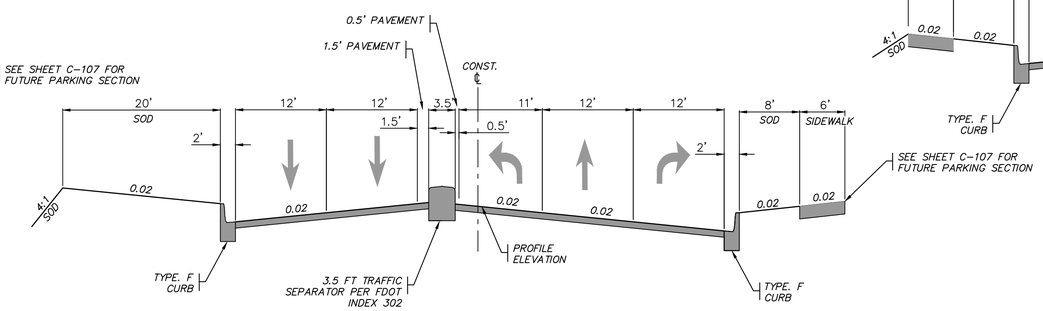

TYPICAL SECTION
N-N'

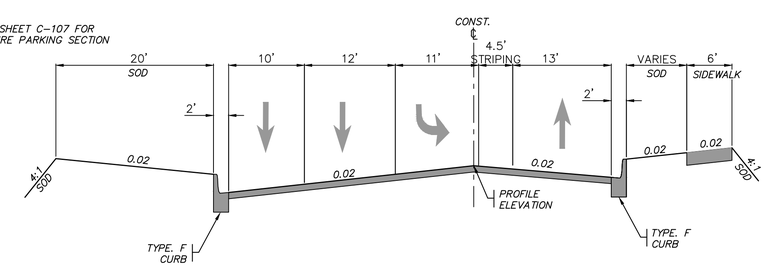

TYPICAL SECTION
O-O'

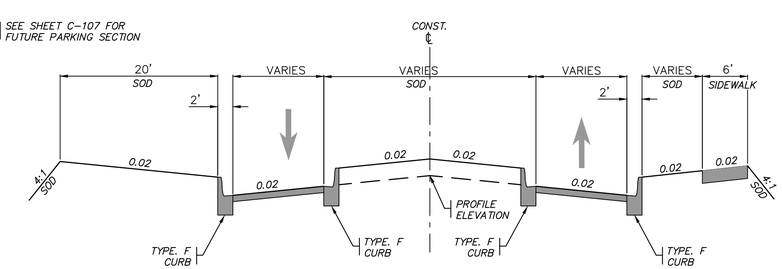

TYPICAL SECTION
P-P'

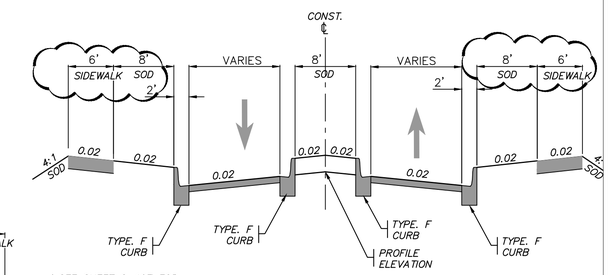

TYPICAL SECTION
Q-Q'

PAVEMENT SN CALCULATIONS

3" TYPE S-1 @ SN: 0.44 = 1.32
8" CRUSHED CONCRETE LBR 150 @ SN: 0.15 = 1.20
12" TYPE B STAB. SUBGRADE LBR 40 @ SN: 0.08 = 0.96
TOTAL SN = 3.48

TYPICAL ROADWAY SECTION NOTES

(1) BELOW THE STABILIZED SUBGRADE A MINIMUM OF TWO FEET OF SELECT MATERIAL, CONSISTING OF A-3 (SP) SOIL WITH A MAXIMUM 15 PERCENT PASSING NUMBER 200 SIEVE, SHALL BE PROVIDED.

(2) THE ENGINEER RESPONSIBLE FOR THE PROJECT SHALL CERTIFY TO THE COUNTY ENGINEERING SERVICES DIRECTOR (THRU PC ENGINEERING INSPECTIONS) THAT THE SELECT MATERIAL MEETS THESE STANDARDS PRIOR TO INSTALLATION OF THE BASE. CERTIFICATION SHALL STRICTLY COMPLY WITH THE SUBGRADE CERTIFICATION FORM AVAILABLE IN "ENGINEERING SERVICES DEPARTMENT: A PROCEDURAL GUIDE FOR THE PREPARATION OF ASSURANCES OF COMPLETION AND MAINTENANCE."

(3) CRUSHED CONCRETE (LBR 150) SHALL BE COMPACTED TO 100% T-180. THE CRUSHED CONCRETE BASE MATERIAL GRADATION SHALL CONFORM TO FDOT STANDARD SPECIFICATION FOR ROAD AND BRIDGE CONSTRUCTION SECTIONS 204 AND 901. THE CRUSHED CONCRETE SHALL ALSO CONFORM TO THE CRUSHED CONCRETE SPECIFICATIONS CONTAINED IN THE PASCO COUNTY TRANSPORTATION TECHNICAL MANUAL.

(4) THESE PLANS SHALL CERTIFY THAT THE ROADWAY SYTEM IS IN SUBSTANTIAL CONFORMANCE WITH THE "MANUAL OF UNIFORM MINIMUM STANDARDS FOR DESIGN, CONSTRUCTION, AND MAINTENANCE OF STREET AND HIGHWAYS, STATE OF FLORIDA", IN EFFECT AT THE TIME THE PLANS WERE PREPARED.

REVISIONS

NO.	DATE	DESCRIPTION	BY
1.	02-02-15	Revisions Per County Comments	ELR
2.	03-03-15	SWFWMD Resubmittal	ELR
3.	06-04-15	Access connection and Sidewalk	ELR
4.	08-07-15	County Resubmittal	ELR
5.	09-22-15	County Resubmittal - Address Comments Mod 1	ELR
6.			
7.			
8.			
9.			

Engineering ~ Planning
Environmental Science
4260 West Linebaugh Avenue
Tampa, Florida 33624
Phone: 813.265.3130 Fax: 813.265.6610
www.wraengineering.com CA 00007652

DRAWING: TYPICAL ROADWAY SECTIONS
DESIGNED: JAC DRAWN: ELR APPROVED: JAC

PROJECT: CYPRESS CREEK TOWN CENTER NORTH
JOB #: 0967 DATUM: NGVD 1929

JOSEPH A. CIMINO
FL P.E. # 67540

Original Date: 07-14-14
Sheet
C-106

CAD File Name: S:--PROJECT FILES\0967 - PASCO 54 INC. - CCTC NORTH\CADD\PLANS\C-105_TYPICAL_ROADWAY_SECTIONS.DWG
Plot Date: 9/23/2015 11:52:03 AM
2012 Water Resource Associates, Inc.

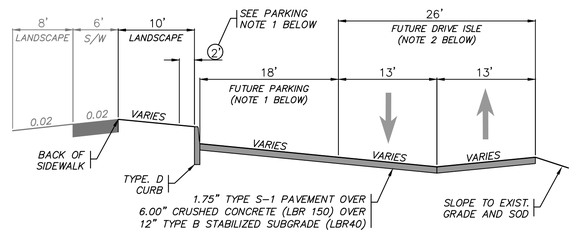

NOTES
1. PARKING PAVEMENT CONSTRUCTED NOW TO BE STRIPED DURING FUTURE VERTICAL IMPROVEMENTS. PROPOSED 18FT DEPTH WITH 2FT OVERHANG FOR TOTAL OF 20 FT STANDARD.
2. 26 FT INVERTED CROWN DRIVE ISLE PAVEMENT CONSTRUCTED NOW FOR FUTURE VERTICAL IMPROVEMENTS.

FUTURE PARKING SECTION

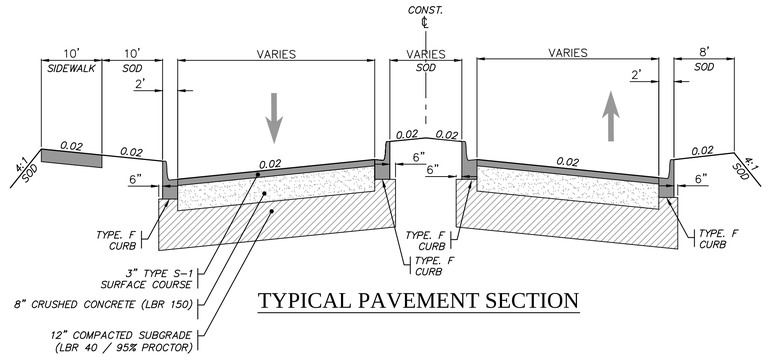

TYPICAL PAVEMENT SECTION

PAVEMENT SN CALCULATIONS

3" TYPE S-1 @ SN: 0.44 = 1.32
8" CRUSHED CONCRETE LBR 150 @ SN: 0.15 = 1.20
12" TYPE B STAB. SUBGRADE LBR 40 @ SN: 0.08 = 0.96
TOTAL SN = 3.48

TYPICAL ROADWAY SECTION NOTES

(1) BELOW THE STABILIZED SUBGRADE A MINIMUM OF TWO FEET OF SELECT MATERIAL, CONSISTING OF A-3 (SP) SOIL WITH A MAXIMUM 15 PERCENT PASSING NUMBER 200 SIEVE, SHALL BE PROVIDED.

(2) THE ENGINEER RESPONSIBLE FOR THE PROJECT SHALL CERTIFY TO THE COUNTY ENGINEERING SERVICES DIRECTOR (THRU PC ENGINEERING INSPECTIONS) THAT THE SELECT MATERIAL MEETS THESE STANDARDS PRIOR TO INSTALLATION OF THE BASE. CERTIFICATION SHALL STRICTLY COMPLY WITH THE SUBGRADE CERTIFICATION FORM AVAILABLE IN "ENGINEERING SERVICES DEPARTMENT: A PROCEDURAL GUIDE FOR THE PREPARATION OF ASSURANCES OF COMPLETION AND MAINTENANCE."

(3) CRUSHED CONCRETE (LBR 150) SHALL BE COMPACTED TO 100% T-180. THE CRUSHED CONCRETE BASE MATERIAL GRADATION SHALL CONFORM TO FDOT STANDARD SPECIFICATION FOR ROAD AND BRIDGE CONSTRUCTION SECTIONS 204 AND 901. THE CRUSHED CONCRETE SHALL ALSO CONFORM TO THE CRUSHED CONCRETE SPECIFICATIONS CONTAINED IN THE PASCO COUNTY TRANSPORTATION TECHNICAL MANUAL.

(4) THESE PLANS SHALL CERTIFY THAT THE ROADWAY SYTEM IS IN SUBSTANTIAL CONFORMANCE WITH THE "MANUAL OF UNIFORM MINIMUM STANDARDS FOR DESIGN, CONSTRUCTION, AND MAINTENANCE OF STREET AND HIGHWAYS, STATE OF FLORIDA", IN EFFECT AT THE TIME THE PLANS WERE PREPARED.

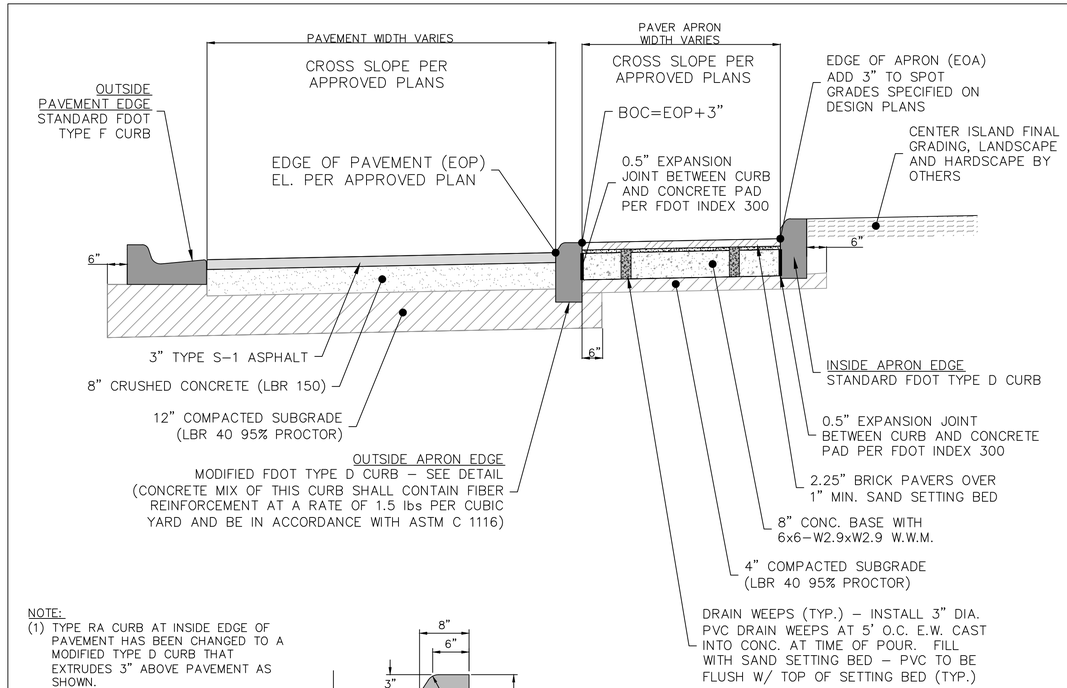

NOTE:
(1) TYPE RA CURB AT INSIDE EDGE OF PAVEMENT HAS BEEN CHANGED TO A MODIFIED TYPE D CURB THAT EXTRUDES 3" ABOVE PAVEMENT AS SHOWN.
(2) EDGE OF PAVEMENT AND BACK EDGE OF APRON ALIGNMENTS HAVE NOT CHANGED FROM PERMITTED DESIGN PLANS.
(3) BY CHANGING RA CURB TO MODIFIED TYPE D CURB AT INSIDE EDGE OF PAVER APRON, THE APRON WIDTH ON ALL ROUNDABOUTS HAS INCREASED BY 19 INCHES.

TYPICAL ROUNDABOUT CROSS SECTION

REVISIONS

NO.	DATE	DESCRIPTION	BY
1.	02-02-15	Revisions Per County Comments	ELR
2.	03-03-15	SWFWMD Resubmittal	ELR
3.	07-06-15	Access Connection and Sidewalk	ELR
4.	08-07-15	County Resubmittal	ELR
5.	09-22-15	County Resubmittal - Address Comments Mod 1	ELR
6.			
7.			
8.			
9.			

Engineering ~ Planning
Environmental Science
4260 West Linebaugh Avenue
Tampa, Florida 33624
Phone: 813.265.3130 Fax: 813.265.6610
www.wraengineering.com CA 00007652

DRAWING
TYPICAL ROADWAY SECTIONS
DESIGNED: JAC DRAWN: ELR APPROVED: JAC

PROJECT
CYPRESS CREEK TOWN CENTER NORTH
JOB #: 0967 DATUM: NGVD 1929

JOSEPH A. CIMINO
FL P.E. # 67540

Original Date: 07-14-14
Sheet
C-107

2012 Water Resource Associates, Inc. Plot Date: 9/23/2015 11:52:08 AM CAD File Name: S:\-PROJECT FILES\0967 - PASCO 54 INC. - CCTC NORTH\CADD\PLANS\C-105_TYPICAL_ROADWAY_SECTIONS.DWG

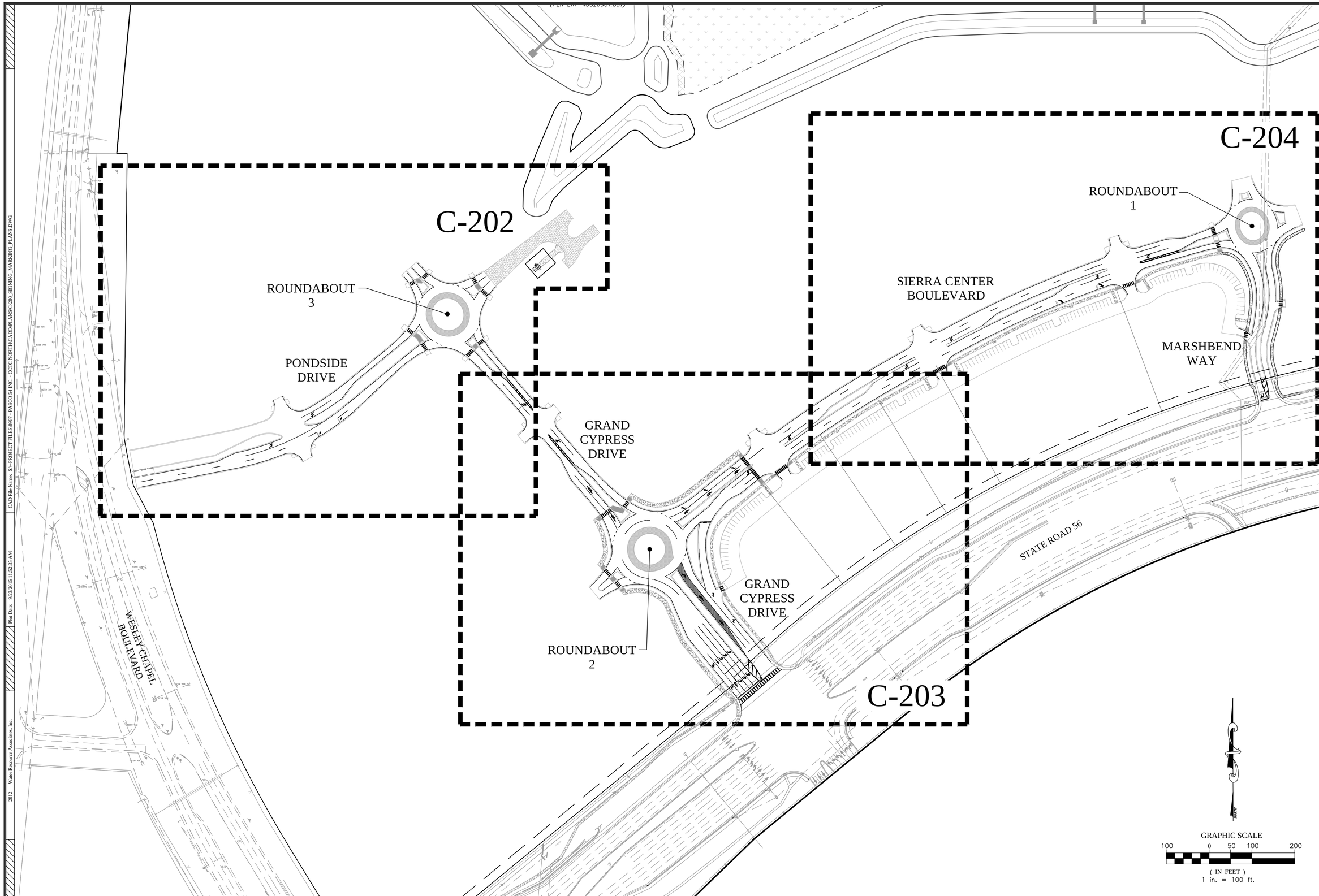

REVISIONS

NO.	DATE	DESCRIPTION	BY
1.	02-02-15	Revisions Per County Comments	ELR
2.	03-03-15	SWFWMD Resubmital	ELR
3.	03-08-15	Access connection and Sidewalk	JAC
4.	06-05-15	County Resubmital	ELR
5.	09-22-15	County Resubmital - Address Comments Mod 1	ELR
6.			
7.			
8.			
9.			

Engineering ~ Planning
Environmental Science
4260 West Linebaugh Avenue
Tampa, Florida 33624
Phone: 813.265.3130 Fax: 813.265.6610
www.wraengineering.com CA 00007652

DRAWING

OVERALL SIGNING AND PAVEMENT MARKING PLAN

DESIGNED: JAC DRAWN: ELR APPROVED: JAC

PROJECT

CYPRESS CREEK TOWN CENTER NORTH

JOB #: 0967 DATUM: NGVD 1929

JOSEPH A. CIMINO
FL P.E. # 67540

Original Date: 07-14-14

Sheet

C-200

2012 Water Resource Associates, Inc. Plot Date: 9/23/2015 11:52:35 AM CAD File Name: S:\--PROJECT FILES\0967 - PASCO 54 INC. - CCTC NORTHCADD\PLANS\C-200_SIGNING_MARKING_PLANS.DWG

DESCRIPTION	UNIT	TOTAL
R1-1 "STOP SIGN"	EACH	9
R1-2 "YIELD"	EACH	23
R2-1 "SPEED LIMIT"	EACH	5
R3-4 "NO U TURN"	EACH	2
R3-7R "RIGHT LANE MUST TURN RIGHT"	EACH	1
R4-7 "KEEP RIGHT"	EACH	3
R6-4	EACH	12
W2-6 "CIRCULAR INTERSECTION"	EACH	7
D-3 "STREET SIGN"	EACH	0
W9-1 "RIGHT LANE ENDS"	EACH	2
W11-2 "PED XING"	EACH	14
W16-7P	EACH	14
CASE 2 RED REFLECTORS	EACH	24
YELLOW/GREEN DELINEATORS	EACH	7
6" WHITE	LF	13300
6" WHITE 3'-3' SKIP	LF	960
6" WHITE 10'-30' SKIP	LF	2380
12" WHITE	LF	704
18" WHITE	LF	2140
24" WHITE	LF	80
6" YELLOW	LF	5080
6" DOUBLE YELLOW	LF	1580
18" YELLOW	LF	440
WHITE DIRECTIONAL ARROW	EACH	30
WHITE TEXT "ONLY"	EACH	3
WHITE TEXT "MERGE"	EACH	2
BLUE RPM	EACH	9

PASCO COUNTY FLORIDA
TRAFFIC OPERATIONS DIVISION
ENGINEERING SERVICES DEPARTMENT
DEVELOPMENT SERVICES BRANCH

SPECIFICATIONS FOR DESIGN AND INSTALLATION OF
TRAFFIC CONTROL DEVICES ON COUNTY ROADS

1. Purpose:
1.1. These specifications have been developed to provide developers with a uniform system for installation of traffic control devices on the County road system. A uniform system provides for reduced maintenance costs and a high standard of visibility for drivers. All required traffic control devices shall be installed by the developers of the project.
2. Florida State Statute 316.0745:
2.1. Any and all traffic control devices installed on the County road system shall conform to Florida State Statute 316.0745, Uniform signals and devices.
2.2. This statute requires that all devices conform to Florida Department of Transportation (FDOT) Specifications. The FDOT has adopted the Federal Manual on Uniform Traffic Control Devices as the standards to be used in the State of Florida.
3. Pavement Markings:
3.1. All pavement markings shall be Thermoplastic or performed tapes; raised pavement markers shall be class "B".
3.2. Pavement markings and raised pavement markers shall be installed on all roads classified other than residential with an ADT greater than 500 vehicles, or if other conditions exist that require pavement markings, (see M.U.T.C.D. section 3B-1).
4. Traffic Control Signs:
4.1. All sign blanks shall be of a type currently certified by the FDOT for use in the State of Florida.
4.2. All sign faces shall be High Intensity grade and of a type currently certified by the FDOT for use in the State of Florida.
4.3. All signs shall be no less than the standard size as specified by the Federal Manual on Uniform Traffic Control Devices. No minimum size signing shall be accepted. Larger signs shall be used when required by design speed, etc.
4.4. Street name signs shall be 6" on local roads and 9" on collector and arterial roads. Six inch signs shall have 4" series C letters and 9" signs shall have 6" series B letters.
4.5. On roads to be maintained by Pasco County, all signs other than street names shall be date coded with a yellow reflective label affixed to the back of the sign. It will be punched to show month, day, and year of installation (See Sample Label). Alternate label designs providing the date code information may be used if a sample is submitted and approved by Pasco County prior to installation. Sample Label: size 2" x 4"

PASCO COUNTY
WARNING
REMOVAL OF, OR DEFACING ANY
TRAFFIC CONTROL DEVICE
IS PUNISHABLE BY FINE AND/OR IMPRISONMENT REPORT DAMAGE
BY CALLING (727)847-2411 INSTALLED
J F M A M J J A S O N D
10's 20's 30's - 1 2 3 4 5 6 7 8 9
12 13 14 15 16

4.6. Works Department and currently certified by the Florida Department of Transportation for use in the State of Florida. Alternative systems etc. shall only be used if approved by the County Engineer.
5. Certification of materials:
5.1. All traffic control devices and materials shall be on the current FDOT approved products list. Proof of certification is
5.2. A Traffic Control Devices Submittal Data Form shall be submitted for approval prior to installation of any traffic control devices. No traffic control device shall be installed until the certification submittal has been approved by the Traffic Operation Division. These forms are available from the Traffic Operation Division. Copies of the approved Traffic Control Devices Submittal Data Form shall be sent to the contractor and the Engineering Inspections Division.
6. Traffic Control Devices Plan:
6.1. A detailed set of plans for required traffic control devices shall be submitted for all road construction site development, subdivision, and Right-of-Way Use Permits. These plans shall be in conformance with FDOT design standards. All plans shall be signed and sealed by a registered professional engineer in the State of Florida.
6.2. With the submittal of final plans to the Development Review Division, two additional sets of the traffic control plan portion of the entire plan shall be submitted. These two sets will be forwarded to the Traffic Operations Division.
7. Cost Estimate:
7.1. An engineer's cost estimate shall be required for all proposed traffic control devices. The estimate shall be provided in conjunction with the Traffic Control Devices Submittal Data Form, (See Section 5.2).
8. Inspection and acceptance:
8.1. Upon completion of the traffic control devices, the contractor shall call the Engineering Inspection Division for an inspection at (813)847-8154.
8.2. The inspection shall be made by the Engineering Inspections Division within 48 hours (two working days) of the request.
8.3. An inspection report shall be made by the Engineering Inspections Division. Copies of the report shall be sent to the Engineer and the Developer.
8.4. 8.4)No roadway shall be open to the public until all traffic control devices have been inspected and accepted by Pasco County.

SIGNAGE AND STRIPING NOTES:

1. ALL SIDEWALK CONSTRUCTION TO MEET A.D.A. REGULATIONS AND STANDARDS. CONSTRUCT DROP CURB AT AREAS OF FUTURE CURB CUT RAMPS AT EACH INTERSECTION AS INDICATED ON THIS PLAN PER THE F.D.O.T. STANDARD INDEX NO. 304 & PASCO COUNTY LDC SECTION 610-5.
2. ALL PAVEMENT MARKINGS SHALL BE MADE WITH PERMANENT THERMOPLASTIC AND SHALL CONFORM TO APPLICABLE FDOT STANDARDS.
3. ALL SIGNAGE SHALL CONFORM TO PASCO COUNTY STANDARDS, FHA, MUTCD, AND FDOT APPLICABLE INDEXES, LATEST EDITION.
4. REFER TO FDOT INDEX 17352 FOR REFLECTIVE PAVEMENT MARKER DETAILS.
5. REFER TO FDOT INDEX 17346 FOR STRIPING DETAILS.
6. ALL PROPOSED ROADWAY DESIGN SPEED LIMITS ARE 20 MPH.
7. ALL ISLAND NOSES TO BE PAINTED PER FDOT DISTRICT 7 CURRENT STANDARDS.
8. THE CONSTRUCTION PLAN IS IN SUBSTANTIAL CONFORMANCE WITH THE MANUAL OF UNIFORM MINIMUM STANDARDS FOR DESIGN, CONSTRUCTION, AND MAINTENANCE OF STREETS AND HIGHWAYS, STATE OF FLORIDA, IN EFFECT AT THE TIME THE PLANS WERE PREPARED.

NOTES FOR PRIVATE STREETS

1. ALL TRAFFIC CONTROL DEVICES SHALL BE INSTALLED IN CONFORMANCE WITH THE MANUAL ON UNIFORM TRAFFIC CONTROL DEVICES AND THE FLORIDA DEPARTMENT OF TRANSPORTATION STANDARDS.
2. STREET NAME SIGNS SHALL BE 9-INCH ON ALL ROAD CLASSIFICATIONS. ALL SIGNS SHALL HAVE 6-INCH SERIES B LETTERS. ALL STREET NAME SIGNS ON PRIVATE ROADS SHALL BE STANDARD D3 STREET NAME SIGNS WITH THE COLORS REVERSED. WHITE BACKGROUND WITH GREEN LETTERS AND BORDER. AT INTERSECTIONS WITH COUNTY OR STATE MAINTAINED ROADS; THE COUNTY OR STATE MAINTAINED ROAD SHALL BE GREEN BACKGROUND WITH WHITE LETTERS AND BORDER.
3. ANY TRAFFIC CONTROL DEVICE FOR A PRIVATE ROADWAY PLACED IN A COUNTY OR STATE RIGHT-OF-WAY SHALL BE INSTALLED ON THE APPROPRIATE BREAKAWAY POST ASSEMBLY.

W11-2 PED XING

R1-1 STOP SIGN

R1-2 YIELD

W16-7P

D-3 STREET NAME

R2-1 SPEED LIMIT

R3-7R

R3-4

R6-4

W2-6 CIRCULAR INTERSECTION

W9-1 RIGHT LANE ENDS

R4-7 KEEP RIGHT

W6-1 DIVIDED HWY

REVISIONS

NO.	DATE	DESCRIPTION	BY
1.	02-02-15	Revisions Per County Comments	ELR
2.	03-03-15	SWFWMD Resubmital	ELR
3.	03-09-15	Access connection and Sidewalk	JAC
4.	04-27-15	County Resubmital	ELR
5.	09-22-15	County Resubmital - Address Comments Mod 1	ELR
6.			
7.			
8.			
9.			

Engineering ~ Planning
Environmental Science
4260 West Linebaugh Avenue
Tampa, Florida 33624
Phone: 813.265.3130 Fax: 813.265.6610
www.wraengineering.com CA 00007652

DRAWING
SIGNING AND PAVEMENT MARKING PLANS
DESIGNED: JAC DRAWN: ELR APPROVED: JAC

PROJECT
CYPRESS CREEK TOWN CENTER NORTH
JOB #: 0967 DATUM: NGVD 1929

JOSEPH A. CIMINO
FL P.E. # 67540

Original Date: 07-14-14
Sheet
C-201

2012 Water Resource Associates, Inc. Plot Date: 9/23/2015 11:52:41 AM CAD File Name: S:\-PROJECT FILES\0967 - PASCO 54 INC. - CCTC NORTHCADD\PLANS\C-200_SIGNING_MARKING_PLANS.DWG

CR54 ACCESS CONNECTION
BUILD-OUT AND SIGNALIZATION
MARKING DETAIL
1"=40'

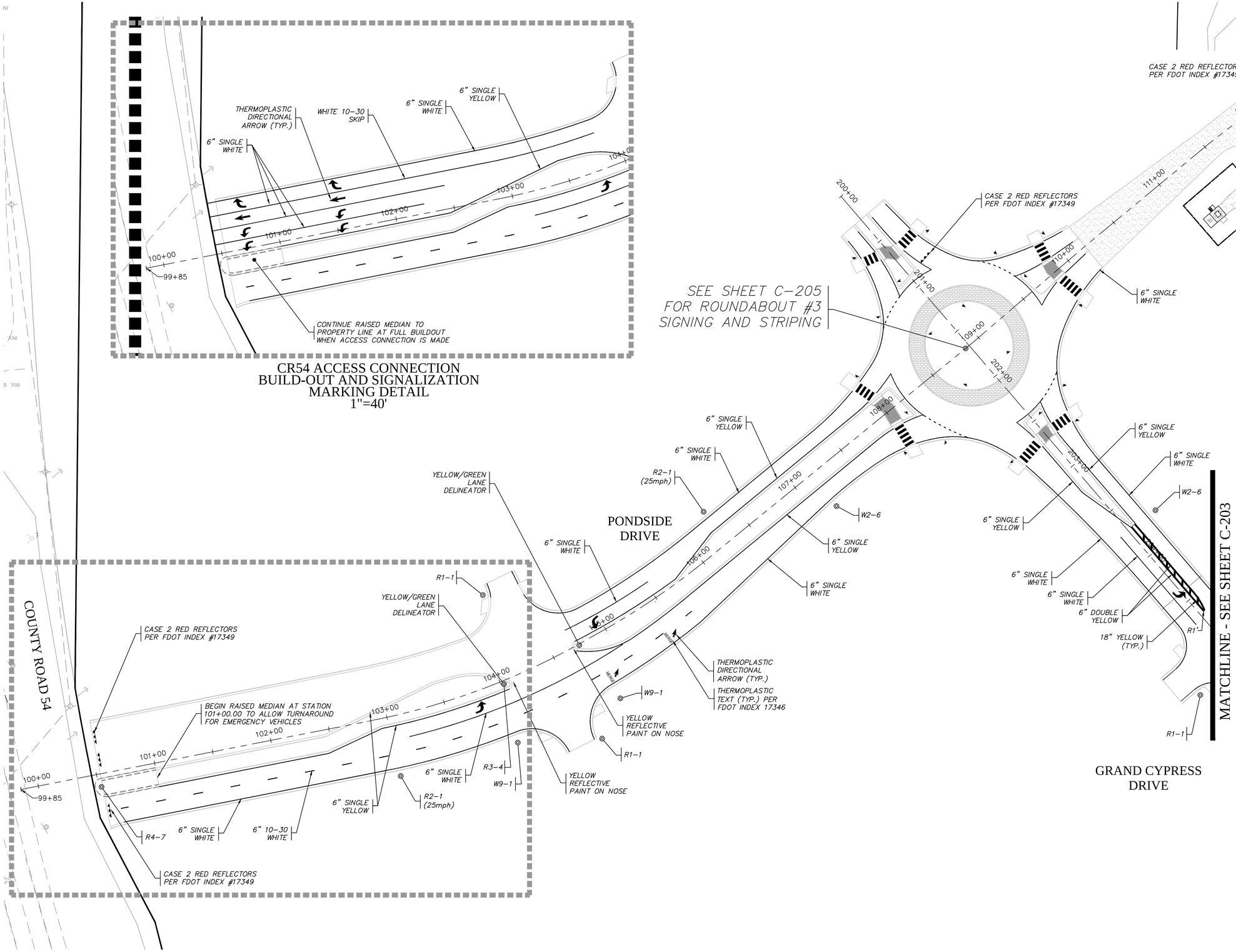

REVISIONS

NO.	DATE	DESCRIPTION	BY
1.	02-02-15	Revisions Per County Comments	ELR
2.	03-03-15	SWFWMD Resubmittal	ELR
3.	03-08-15	Access connection and Sidewalk	JAC
4.	04-27-15	County Resubmittal	ELR
5.	09-22-15	County Resubmittal - Address Comments Mod 1	ELR
6.			
7.			
8.			
9.			

Engineering ~ Planning
Environmental Science
4260 West Linebaugh Avenue
Tampa, Florida 33624
Phone: 813.265.3130 Fax: 813.265.6610
www.wraengineering.com CA 00007652

DRAWING
SIGNING AND PAVEMENT MARKING PLANS
DESIGNED: JAC DRAWN: ELR APPROVED: JAC

PROJECT
CYPRESS CREEK TOWN CENTER NORTH
JOB #: 0967 DATUM: NGVD 1929

JOSEPH A. CIMINO
FL. P.E. # 67540

Original Date: 07-14-14
Sheet
C-202

2012 Water Resource Associates, Inc. Plot Date: 9/23/2015 11:52:59 AM CAD File Name: S:\-PROJECT FILES\0967 - PASCO 54 INC. - CCTC NORTHCADD\PLANS\C-200_SIGNING_MARKING_PLANS.DWG

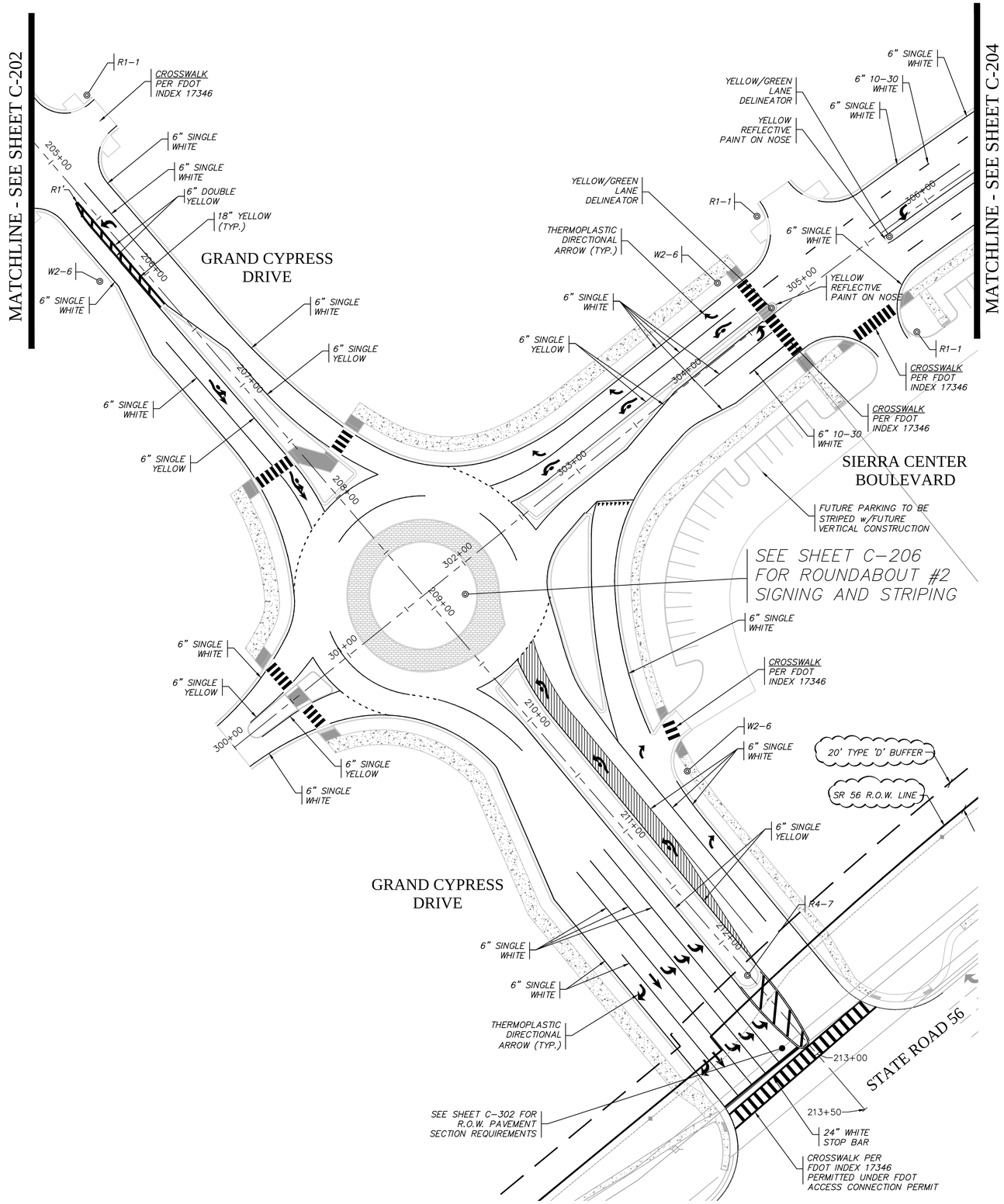

GRAPHIC SCALE

40 0 20 40 80

(IN FEET)
1 in. = 40 ft.

REVISIONS			
NO.	DATE	DESCRIPTION	BY
1.	02-02-15	Revisions Per County Comments	ELR
2.	03-03-15	SWFWMD Resubmittal	ELR
3.	03-06-15	Access connection and Sidewalk	JAC
4.	09-08-15	County Resubmittal	ELR
5.	09-22-15	County Resubmittal - Address Comments Mod 1	ELR
6.			
7.			
8.			
9.			

Engineering ~ Planning
Environmental Science
4260 West Linebaugh Avenue
Tampa, Florida 33624
Phone: 813.265.3130 Fax: 813.265.6610
www.wraengineering.com CA 00007652

DRAWING
SIGNING AND PAVEMENT MARKING PLANS
DESIGNED: JAC DRAWN: ELR APPROVED: JAC

PROJECT
CYPRESS CREEK TOWN CENTER NORTH
JOB #: 0967 DATUM: NGVD 1929

JOSEPH A. CIMINO
FL. P.E. # 67540

Original Date: 07-14-14
Sheet
C-203

2012 Water Resource Associates, Inc. Plot Date: 9/23/2015 11:52:54 AM CAD File Name: S:\-PROJECT FILES\0967 - PASCO 54 INC. - CCTC NORTHCADD\PLANS\C-200_SIGNING_MARKING_PLANS.DWG

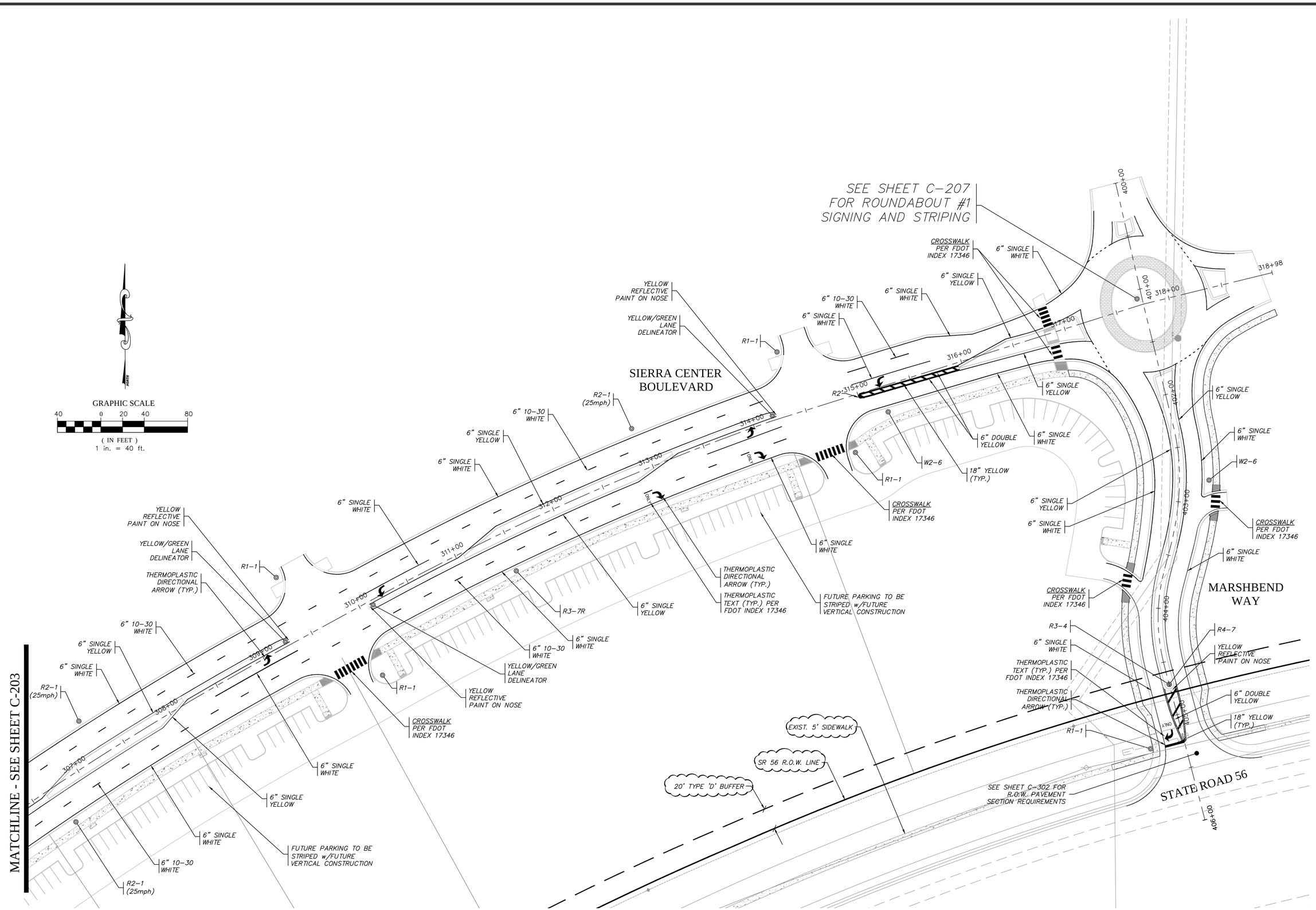

REVISIONS			
NO.	DATE	DESCRIPTION	BY
1.	02-02-15	Revisions Per County Comments	ELR
2.	03-03-15	SWFWMD Resubmittal	ELR
3.	03-08-15	Access connection and Sidewalk	JAC
4.	04-27-15	County Resubmittal	ELR
5.	09-22-15	County Resubmittal - Address Comments Mod 1	ELR
6.			
7.			
8.			

Engineering ~ Planning
Environmental Science
4260 West Linebaugh Avenue
Tampa, Florida 33624
Phone: 813.265.3130 Fax: 813.265.6610
www.wraengineering.com CA 00007652

DRAWING

SIGNING AND PAVEMENT MARKING PLANS

DESIGNED: JAC DRAWN: ELR APPROVED: JAC

PROJECT

CYPRESS CREEK TOWN CENTER NORTH

JOB #: 0967 DATUM: NGVD 1929

JOSEPH A. CIMINO
FL P.E. # 67540

Original Date: 07-14-14

Sheet

C-204

2012 Water Resource Associates, Inc. Plot Date: 9/23/2015 11:52:59 AM CAD File Name: S:\-PROJECT FILES\0967 - PASCO 54 INC. - CCTC NORTH\CADD\PLANS\C-200_SIGNING_MARKING_PLANS.DWG

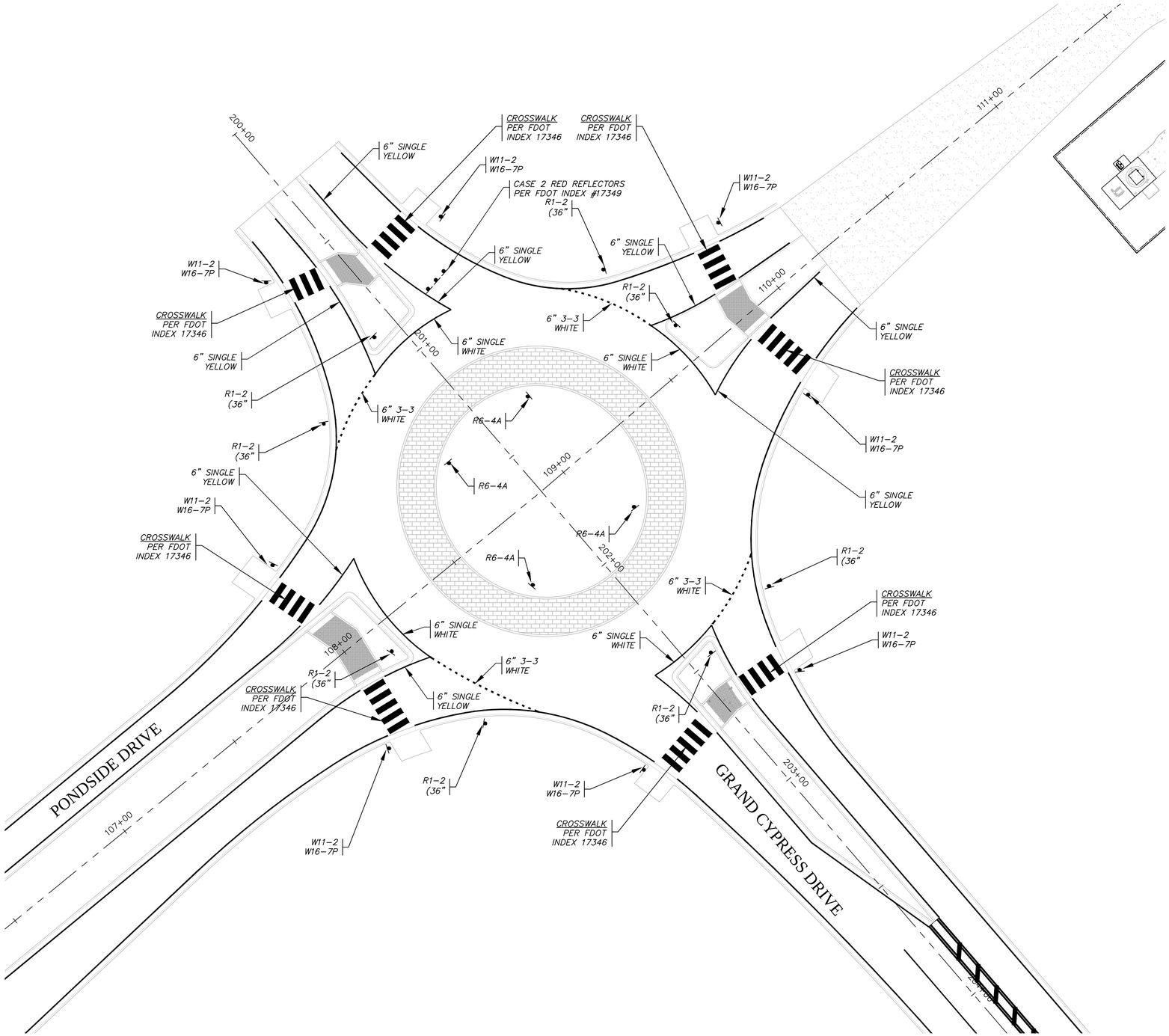

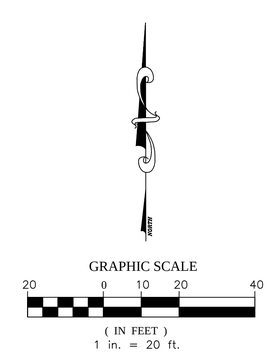

REVISIONS			
NO.	DATE	DESCRIPTION	BY
1.	02-02-15	Revisions Per County Comments	ELR
2.	03-03-15	SWFWMD Resubmittal	ELR
3.	03-09-15	Access connection and Sidewalk	JAC
4.	04-07-15	County Resubmittal	ELR
5.	09-22-15	County Resubmittal - Address Comments Mod 1	ELR
6.			
7.			
8.			

Engineering ~ Planning
Environmental Science
4260 West Linebaugh Avenue
Tampa, Florida 33624
Phone: 813.265.3130 Fax: 813.265.6610
www.wraengineering.com CA 00007652

DRAWING
SIGNING AND PAVEMENT MARKING PLANS ROUNDABOUT 1
DESIGNED: JAC DRAWN: ELR APPROVED: JAC

PROJECT
CYPRESS CREEK TOWN CENTER NORTH
JOB #: 0967 DATUM: NGVD 1929

JOSEPH A. CIMINO
FL P.E. # 67540

Original Date: 07-14-14
Sheet
C-205

2012 Water Resource Associates, Inc. Plot Date: 9/22/2015 11:53:04 AM CAD File Name: S:\~PROJECT FILES\0967 - PASCO 54 INC. - CCTC NORTH\CADD\PLANS\C-200_SIGNING_MARKING_PLANS.DWG

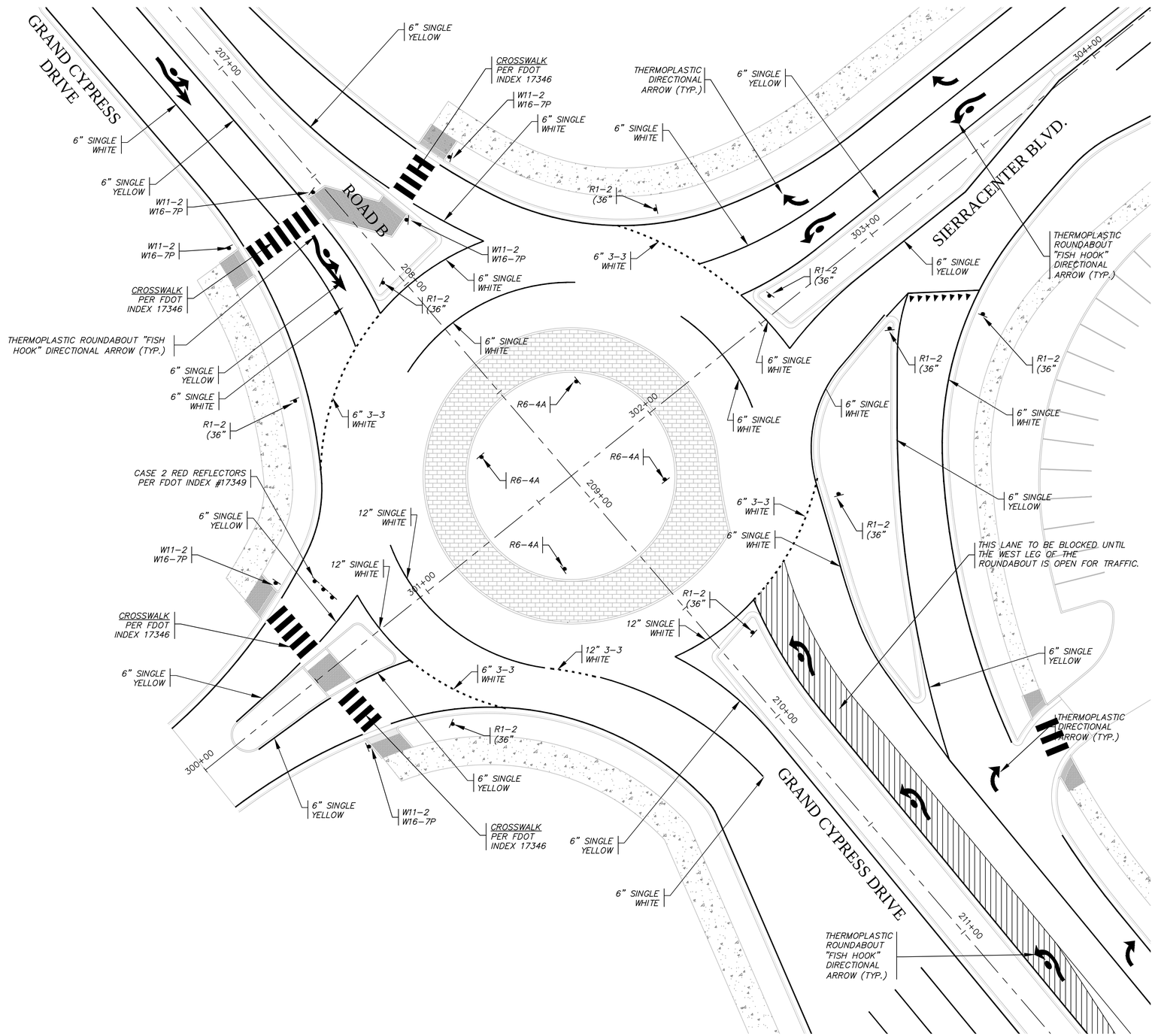

GRAPHIC SCALE

20 0 10 20 40

(IN FEET)
1 in. = 20 ft.

REVISIONS			
NO.	DATE	DESCRIPTION	BY
1.	02-02-15	Revisions Per County Comments	ELR
2.	03-03-15	SWFWMD Resubmittal	ELR
3.	03-06-15	Access connection and Sidewalk	JAC
4.	04-17-15	County Resubmittal	ELR
5.	09-22-15	County Resubmittal - Address Comments Mod 1	ELR
6.			
7.			
8.			
9.			

Engineering ~ Planning
Environmental Science
4260 West Linebaugh Avenue
Tampa, Florida 33624
Phone: 813.265.3130 Fax: 813.265.6610
www.wraengineering.com CA 00007652

DRAWING

SIGNING AND PAVEMENT MARKING PLANS ROUNDABOUT 2

DESIGNED: JAC DRAWN: ELR APPROVED: JAC

PROJECT

CYPRESS CREEK TOWN CENTER NORTH

JOB #: 0967 DATUM: NGVD 1929

JOSEPH A. CIMINO
FL P.E. # 67540

Original Date: 07-14-14

Sheet

C-206

2012 Water Resource Associates, Inc. Plot Date: 9/22/2015 11:53:09 AM CAD File Name: S:\~PROJECT FILES\0967 - PASCO 54 INC. - CCTC NORTHCADD\PLANS\C-200_SIGNING_MARKING_PLANS.DWG

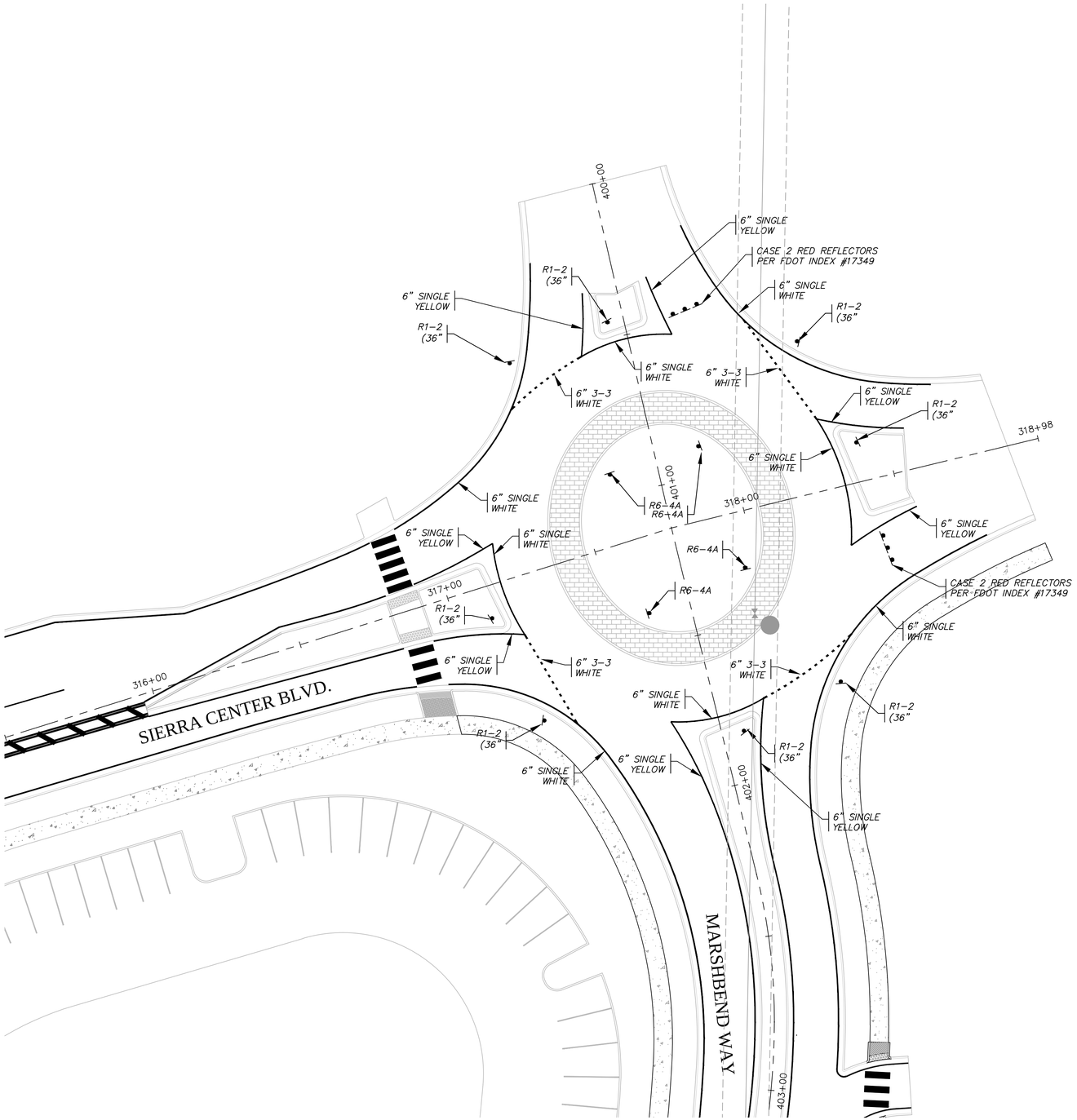

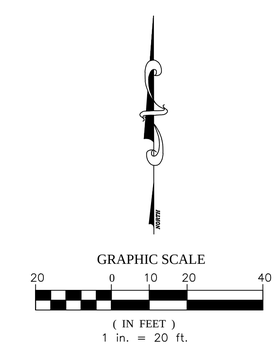

REVISIONS

NO.	DATE	DESCRIPTION	BY
1.	02-02-15	Revisions Per County Comments	ELR
2.	03-03-15	SWFWMD Resubmittal	ELR
3.	03-08-15	Access connection and Sidewalk	JAC
4.	06-05-15	County Resubmittal	ELR
5.	09-22-15	County Resubmittal - Address Comments Mod 1	ELR
6.			
7.			
8.			
9.			

Engineering ~ Planning
Environmental Science
4260 West Linebaugh Avenue
Tampa, Florida 33624
Phone: 813.265.3130 Fax: 813.265.6610
www.wraengineering.com CA 00007652

DRAWING
SIGNING AND PAVEMENT MARKING PLANS ROUNDABOUT 3
DESIGNED: JAC DRAWN: ELR APPROVED: JAC

PROJECT
CYPRESS CREEK TOWN CENTER NORTH
JOB #: 19967 DATUM: NGVD 1929

JOSEPH A. CIMINO
FL P.E. # 67540

Original Date: 07-14-14
Sheet
C-207

2012 Water Resource Associates, Inc. Plot Date: 9/23/2015 11:53:14 AM CAD File Name: S:\~PROJECT FILES\19967 - PASCO 54 INC. - CCTC NORTHCADD\PLANS\C-200_SIGNING_MARKING_PLANS.DWG

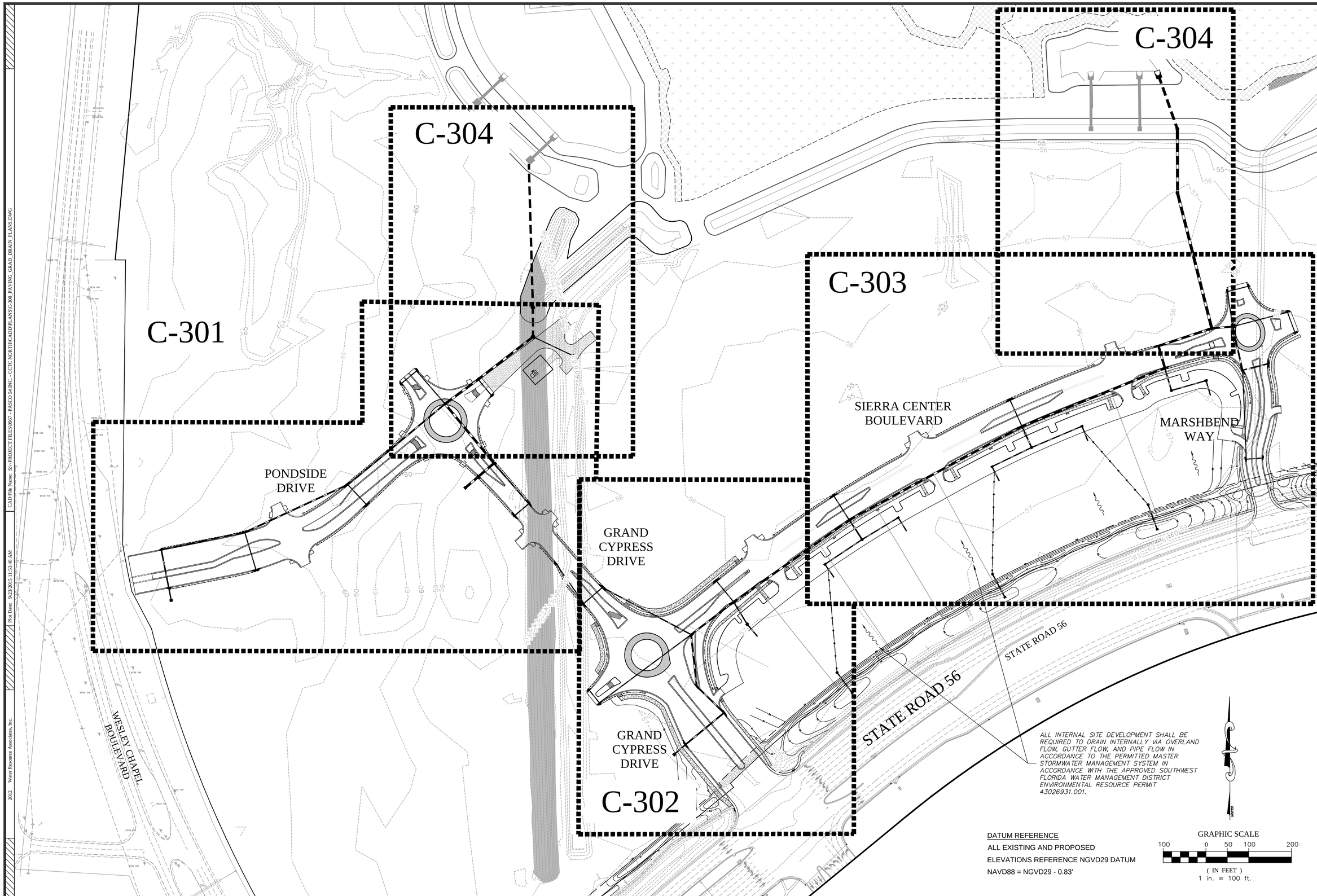

DATUM REFERENCE

ALL EXISTING AND PROPOSED

ELEVATIONS REFERENCE NGVD29 DATUM

NAVD88 = NGVD29 - 0.83'

REVISIONS

NO.	DATE	DESCRIPTION	BY
1.	02-02-15	Revisions Per County Comments	ELR
2.	03-03-15	SWFWMD Resubmittal	ELR
3.	06-16-15	Access connection and Sidewalk	ELR
4.	08-07-15	County Resubmittal	ELR
5.	09-22-15	County Resubmittal - Address Comments Mod 1	ELR
6.			
7.			
8.			
9.			

Engineering ~ Planning
Environmental Science
4260 West Linebaugh Avenue
Tampa, Florida 33624
Phone: 813.265.3130 Fax: 813.265.6610
www.wraengineering.com CA 00007652

DRAWING

OVERALL PAVING, GRADING AND DRAINAGE PLAN

DESIGNED: JAC DRAWN: ELR APPROVED: JAC

PROJECT

CYPRESS CREEK TOWN CENTER NORTH

JOB #: 0967 DATUM: NGVD 1929

JOSEPH A. CIMINO
FL P.E. # 67540

Original Date: 07-14-14

Sheet

C-300

2012 Water Resource Associates, Inc. Plot Date: 9/22/2015 11:53:48 AM CAD File Name: S:\~PROJECT FILES\0967 - PASCO 54 INC. - CCTC NORTH\CADD\PLANS\C-300_PAVING_GRAD_DRAIN_PLANS.DWG

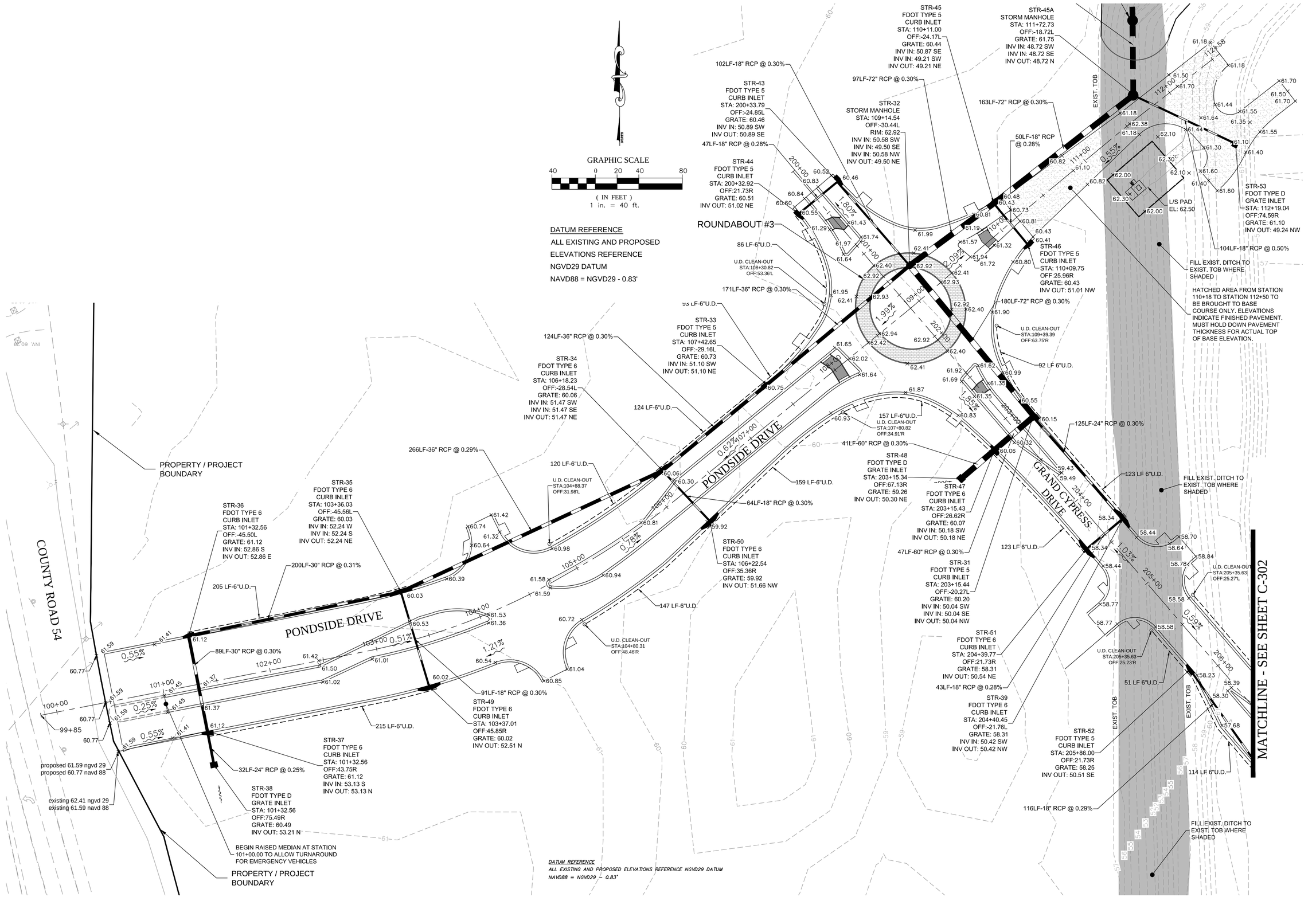

NO.	DATE	DESCRIPTION	BY
1.	02-02-15	Revisions Per County Comments	ELR
2.	03-03-15	SWFWMD Resubmittal	ELR
3.	04-06-15	Access connection and Sidewalk	JAC
4.	08-07-15	County Resubmittal	ELR
5.	09-22-15	County Resubmittal - Address Comments Mod 1	ELR
6.			
7.			
8.			
9.			

REVISIONS

Engineering ~ Planning
Environmental Science
4260 West Linebaugh Avenue
Tampa, Florida 33624
Phone: 813.265.3130 Fax: 813.265.6610
www.wraengineering.com CA 00007652

DRAWING: PAVING, GRADING AND DRAINAGE PLANS

DESIGNED: JAC DRAWN: ELR APPROVED: JAC

PROJECT: CYPRESS CREEK TOWN CENTER NORTH

JOB #: 0967 DATUM: NGVD 1929

JOSEPH A. CIMINO
FL P.E. # 67540

Original Date: 07-14-14

Sheet

C-301

2012 Water Resource Associates, Inc. Plot Date: 9/23/2015 11:53:38 AM CAD File Name: S:\~PROJECT FILES\0967 - PASCO 54 INC. - CCTC NORTH\CADD\PLANS\C-300_PAVING_GRAD_DRAIN_PLANS.DWG

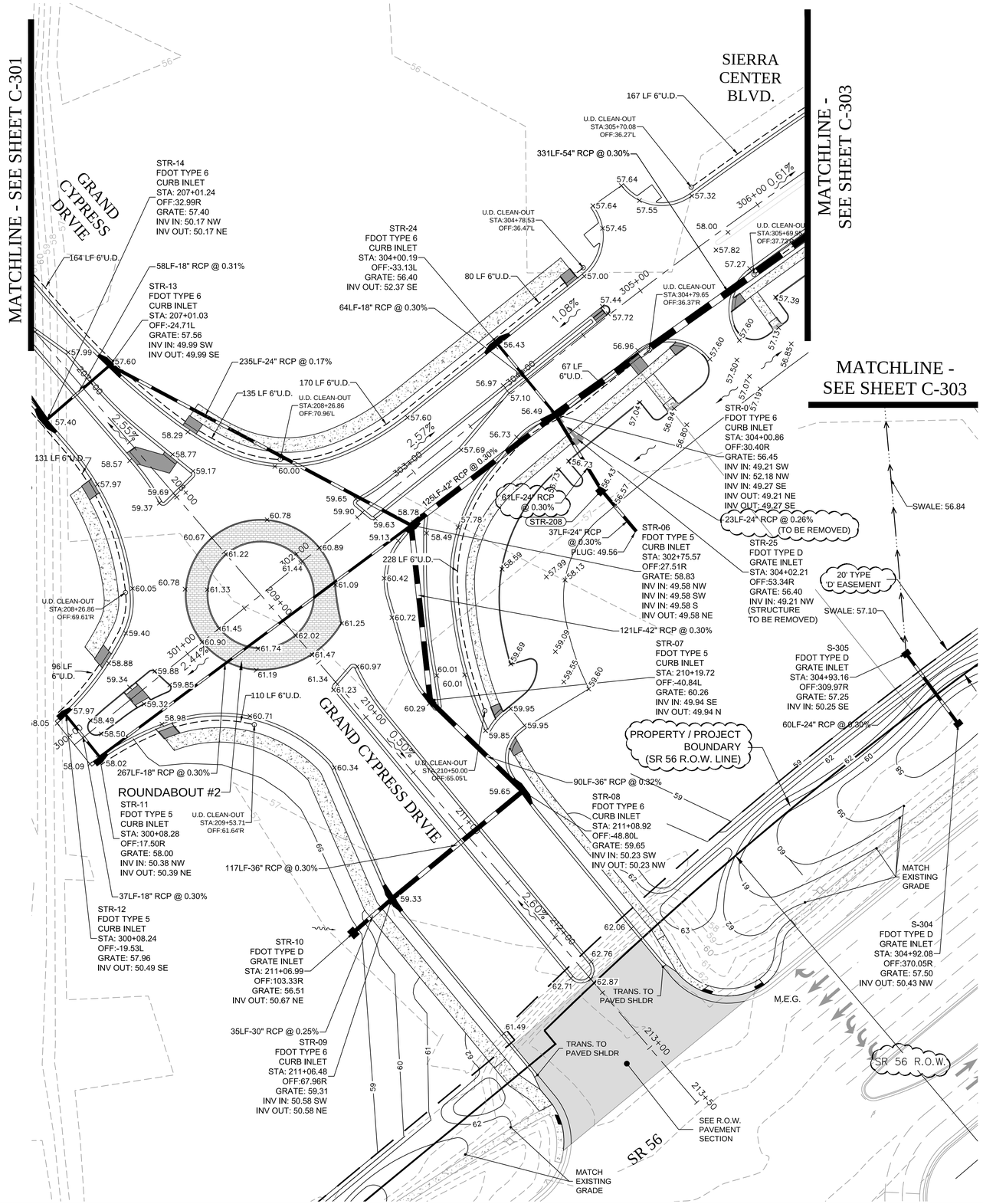

STORM STRUCTURES

STR-208
FDOT TYPE D
GRATE INLET
STA: 303+92.93
OFF:91.00R
GRATE: 57.00
INV IN: 49.45 SE
INV OUT: 49.45 NW

RIGHT OF WAY PAVEMENT SECTION

12" TYPE B STABILIZED SUBGRADE
OPTIONAL BASE GROUP 9 WITH TYPE SP STRUCTURAL COURSE (TRAFFIC C)(3.5") AND FRICTION COURSE FC-12.5 (TRAFFIC C)(1.5")(PG-76-22 ARB)

GRAPHIC SCALE

40 0 20 40 80

(IN FEET)
1 in. = 40 ft.

DATUM REFERENCE

ALL EXISTING AND PROPOSED ELEVATIONS REFERENCE NGVD29 DATUM
NAVD88 = NGVD29 - 0.83'

REVISIONS

NO.	DATE	DESCRIPTION	BY
1.	02-02-15	Revisions Per County Comments	ELR
2.	03-03-15	SWFWMD Resubmittal	ELR
3.	06-04-15	Access connection and Sidewalk	JAC
4.	08-07-15	County Resubmittal	ELR
5.	09-22-15	County Resubmittal - Address Comments Mod 1	ELR
6.			
7.			
8.			
9.			

Engineering ~ Planning
Environmental Science
4260 West Linebaugh Avenue
Tampa, Florida 33624
Phone: 813.265.3130 Fax: 813.265.6610
www.wraengineering.com CA 00007652

DRAWING

PAVING, GRADING AND DRAINAGE PLANS

DESIGNED: JAC DRAWN: ELR APPROVED: JAC

PROJECT

CYPRESS CREEK TOWN CENTER NORTH

JOB #: 0967 DATUM: NGVD 1929

JOSEPH A. CIMINO
FL P.E. # 67540

Original Date: 07-14-14

Sheet

C-302

2012 Water Resource Associates, Inc. Plot Date: 9/23/2015 11:54:07 AM CAD File Name: S:\--PROJECT FILES\0967 - PASCO 54 INC. - CCTC NORTH\CADD\PLANS\C-300_PAVING_GRAD_DRAIN_PLANS.DWG

STORM STRUCTURES

STR-200
FDOT TYPE D
GRATE INLET
STA: 316+48.30
OFF:77.92R
GRATE: 56.66
INV IN: 46.18 S
INV OUT: 46.18 W

STR-201
STORM MANHOLE
STA: 315+64.15
OFF:75.84R
GRATE: 57.08
INV IN: 45.93 E
INV OUT: 45.93 N

STR-202
FDOT TYPE D
GRATE INLET
STA: 313+33.47
OFF:88.60R
GRATE: 56.33
INV IN: 47.39 S
INV OUT: 47.39 SW

STR-203
STORM MANHOLE
STA: 312+00.61
OFF:88.58R
GRATE: 56.97
INV IN: 47.01 NE
INV IN: 47.01 SW
INV OUT: 47.01 NW

STR-204
FDOT TYPE D
GRATE INLET
STA: 310+94.15
OFF:88.98R
GRATE: 56.46
INV IN: 47.32 SE
INV OUT: 47.32 NE

STR-205
FDOT TYPE D
GRATE INLET
STA: 308+39.05
OFF:88.60R
GRATE: 56.46
INV IN: 48.67 SE
INV OUT: 48.67 SW

STR-206
STORM MANHOLE
STA: 307+37.01
OFF:88.50R
GRATE: 56.96
INV IN: 48.37 NE
INV IN: 48.37 SW
INV OUT: 48.37 NW

STR-207
FDOT TYPE D
GRATE INLET
STA: 306+29.03
OFF:88.83R
GRATE: 56.46
INV IN: 48.68 SE
INV OUT: 48.68 NE

SECTION 'A - A'
N.T.S.

DATUM REFERENCE
ALL EXISTING AND PROPOSED
ELEVATIONS REFERENCE NGVD29 DATUM
NAVD88 = NGVD29 - 0.83'

GRAPHIC SCALE
40 0 20 40 80
(IN FEET)
1 in. = 40 ft.

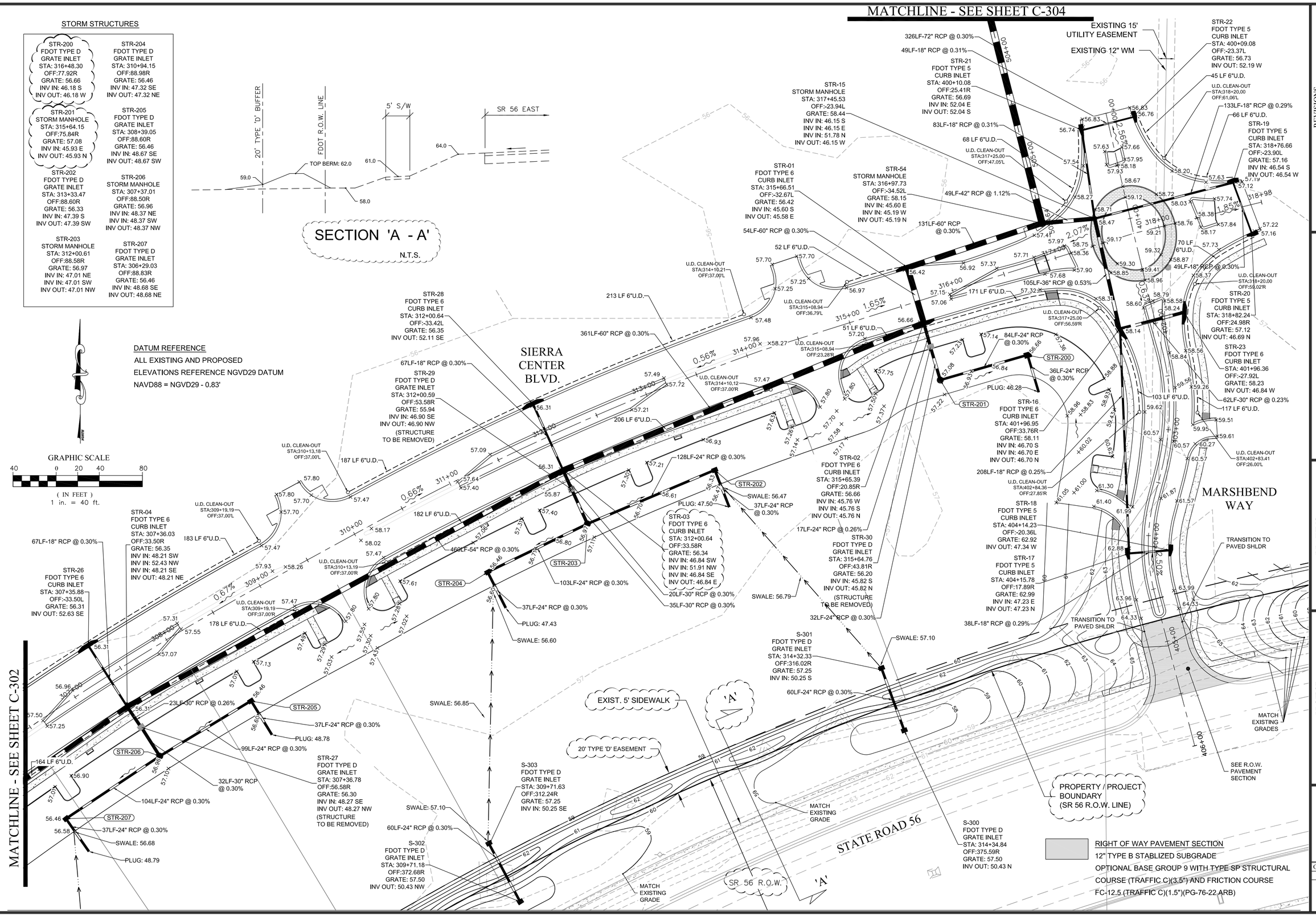

RIGHT OF WAY PAVEMENT SECTION
12" TYPE B STABLIZED SUBGRADE
OPTIONAL BASE GROUP 9 WITH TYPE SP STRUCTURAL COURSE (TRAFFIC C)(3.5") AND FRICTION COURSE FC-12.5 (TRAFFIC C)(1.5")(PG-76-22 ARB)

REVISIONS

NO.	DATE	DESCRIPTION	BY
1.	02-02-15	Revisions Per County Comments	ELR
2.	02-06-15	SWFWMD Resubmittal	JAC
3.	03-03-15	County Resubmittal - Sidewalk	JAC
4.	08-07-15	County Resubmittal	ELR
5.	09-22-15	County Resubmittal - Address Comments Mod 1	ELR
6.			
7.			
8.			
9.			

Engineering ~ Planning
Environmental Science
4260 West Linebaugh Avenue
Tampa, Florida 33624
Phone: 813.265.3130 Fax: 813.265.6610
www.wraengineering.com CA 00007652

DRAWING
PAVING, GRADING AND DRAINAGE PLANS
DESIGNED: JAC DRAWN: ELR APPROVED: JAC

PROJECT
CYPRESS CREEK TOWN CENTER NORTH
JOB #: 0967 DATUM: NGVD 1929

JOSEPH A. CIMINO
FL P.E. # 67540

Original Date: 07-14-14
Sheet
C-303

2012 Water Resource Associates, Inc. Plot Date: 10/7/2015 11:04:04 AM CAD File Name: S:\~PROJECT FILES\0967 - PASCO 54 INC. - CCTC NORTHCADD\PLANS\C-300_PAVING, GRAD DRAIN PLANS.DWG

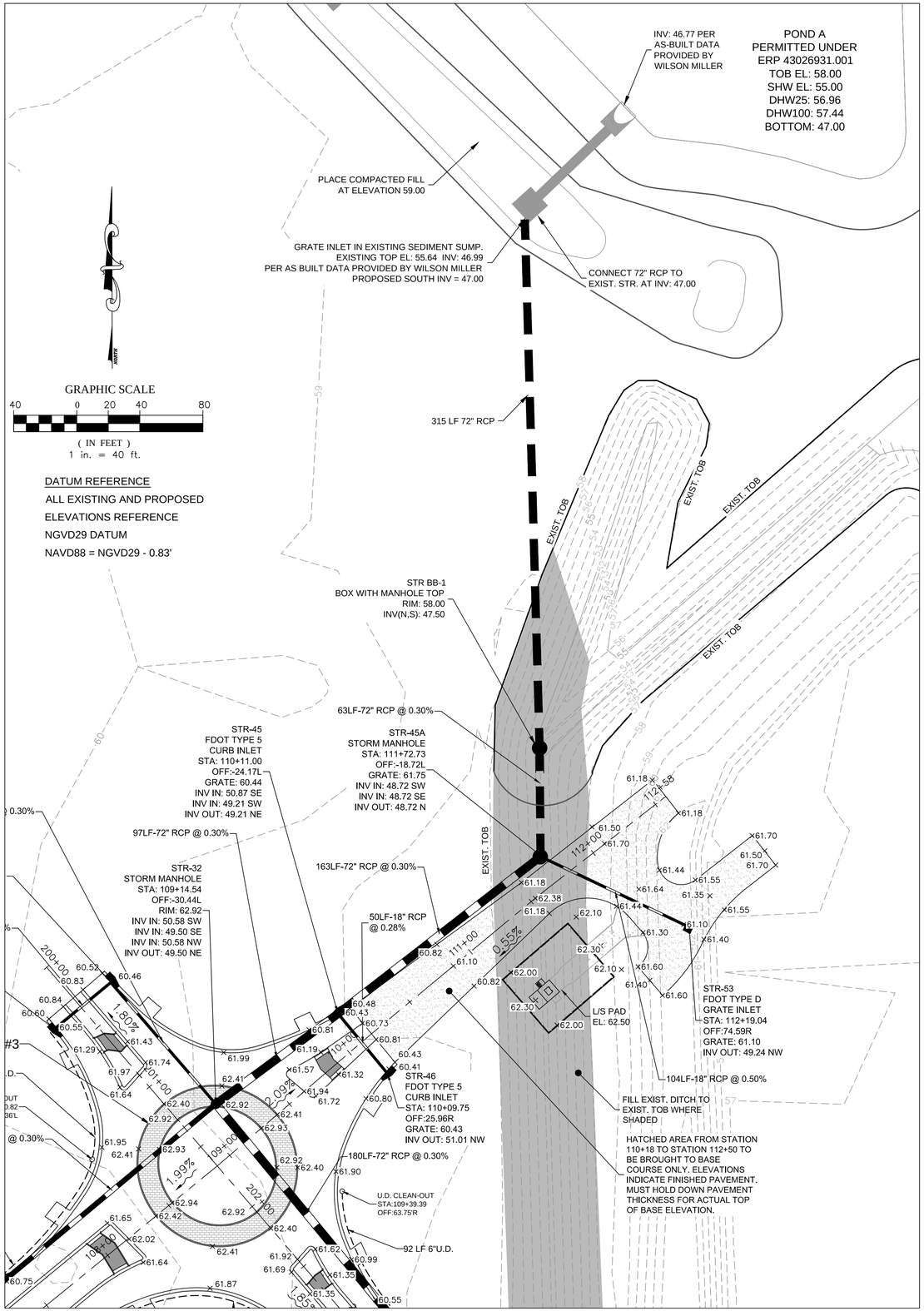

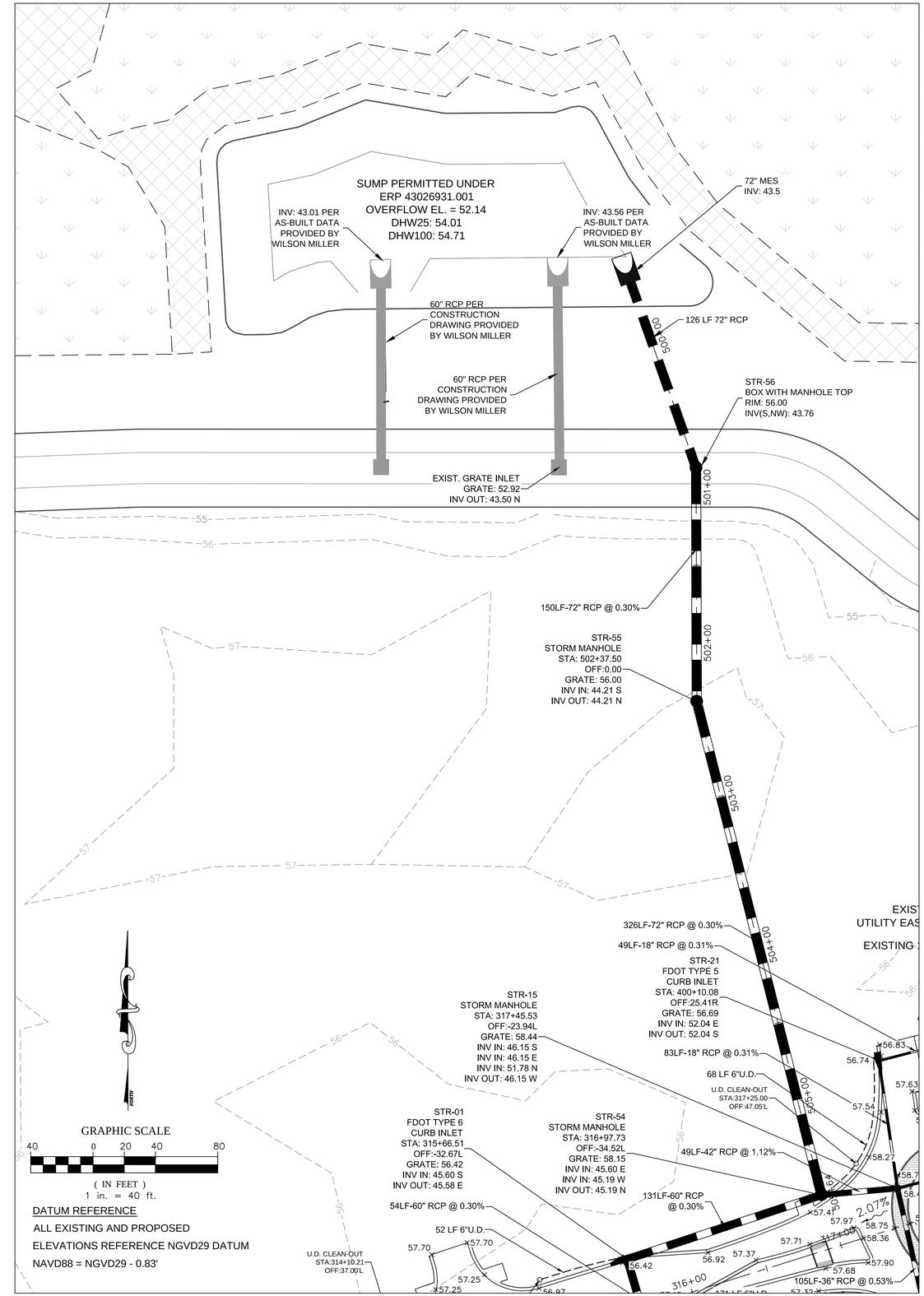

REVISIONS

NO.	DATE	DESCRIPTION	BY
1.	02-02-15	Revisions Per County Comments	ELR
2.	03-03-15	SWFWMD Resubmittal	ELR
3.	03-04-15	Add Crosswalks and Sidewalk	ELR
4.	08-07-15	County Resubmittal	ELR
5.	09-22-15	County Resubmittal - Address Comments Mod 1	ELR
6.			
7.			
8.			
9.			

Engineering ~ Planning
Environmental Science
4260 West Linebaugh Avenue
Tampa, Florida 33624
Phone: 813.265.3130 Fax: 813.265.6610
www.wraengineering.com CA 00007652

DRAWING

PAVING, GRADING AND DRAINAGE PLANS

DESIGNED: JAC DRAWN: ELR APPROVED: JAC

PROJECT

CYPRESS CREEK TOWN CENTER NORTH

JOB #: 0967 DATUM: NGVD 1929

JOSEPH A. CIMINO
FL P.E. # 67540

Original Date: 07-14-14

Sheet

C-304

2012 Water Resource Associates, Inc. Plot Date: 9/23/2015 11:54:35 AM CAD File Name: S:--PROJECT FILES\0967 - PASCO 54 INC. - CCTC NORTH\CADD\PLANS\C-300_PAVING_GRAD_DRAIN_PLANS.DWG

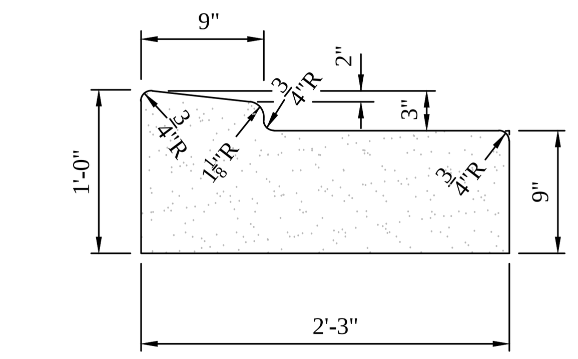

TYPE 'RA' CURB DETAIL

F.D.O.T. INDEX NO. 300
NOT TO SCALE

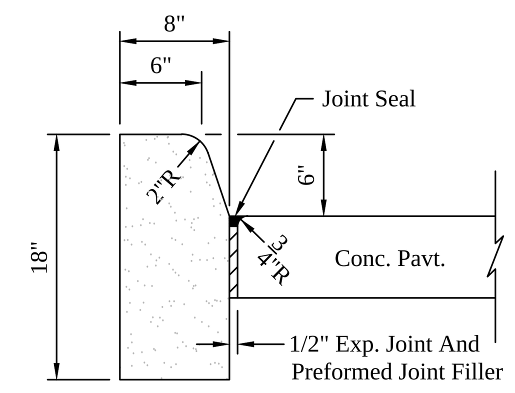

TYPE 'D' CURB DETAIL

F.D.O.T. INDEX NO. 300
NOT TO SCALE

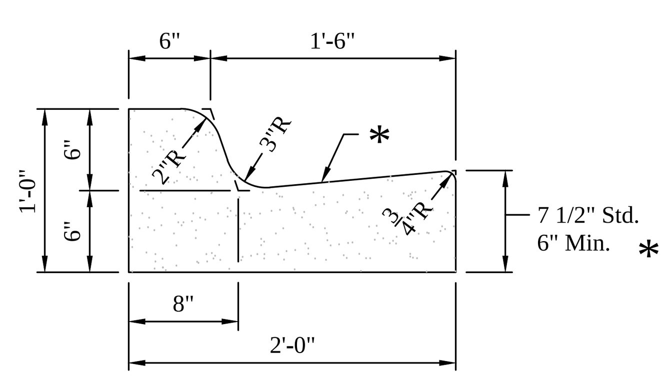

TYPE 'F' CURB DETAIL

F.D.O.T. INDEX NO. 300
NOT TO SCALE

Note: For use adjacent to concrete or flexible pavement, concrete shown.
Expansion joint, preformed joint filler and joint seal are required between curbs and concrete pavement only.

* When used on high side of roadways, the cross slope of the gutter shall match the cross slope of the adjacent pavement. The thickness of the lip shall be 6", unless otherwise shown on plans.

Note: For use adjacent to concrete or flexible pavement, concrete shown.
For details depicting usage adjacent to flexible pavement, see diagram below. Expansion joint, preformed joint filler and joint seal are required between curbs and concrete pavement only.

GENERAL NOTES:

1. For curb, gutter and curb and gutter provide 1/8" - 1/4" contraction joints at 10' centers (max.). Contraction joints adjacent to concrete pavement on tangents and flat curves are to match the pavement joints, with intermediate joints not to exceed 10' centers. Curb, gutter and curb & gutter expansion joints shall be located in accordance with Section 520 of the standard specifications.

   Ends of Curbs Type D shall transition from full to zero heights in 3 feet.

Aluminum Post: 3/8" dia. Aluminum Button Head Bolt with Nut and Lockwasher or 5/16" dia. Stainless Steel Hex Bolt with Flat Washer under Head and Lockwasher under Nut.

Channel Post: Provide Attachment in Accordance with the "Sign Attachment Detail" on Index No. 11865.

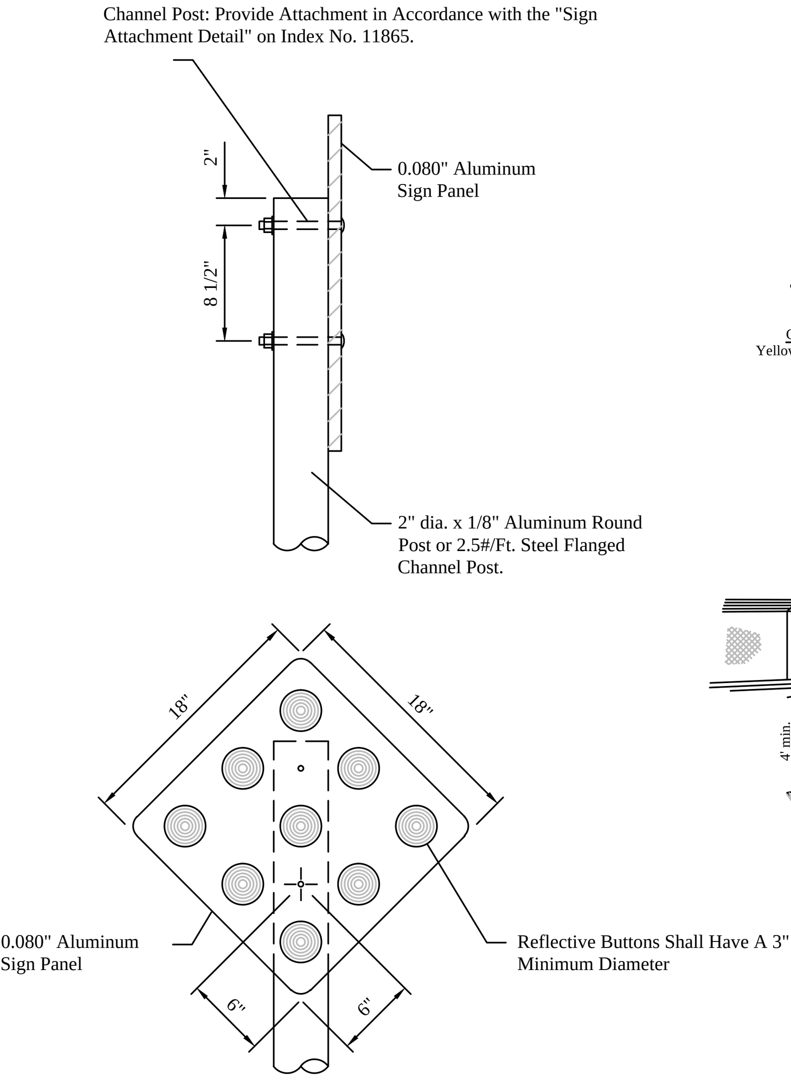

No concrete footing is required for delineator supports.
Supports shall be driven 3' into the ground.

CASE I...Object Markers (Type I) shall have a Yellow Reflective Background, and Yellow Reflective Buttons.
CASE II...End of Road Markers Shall have a Red Reflective Background, and Red Reflective Buttons. Payment shall be under Pay Item for Type I Object Marker.

NOTE: for pavement marking see Index No. 17346
No guardrail is required unless special field conditions require its use.

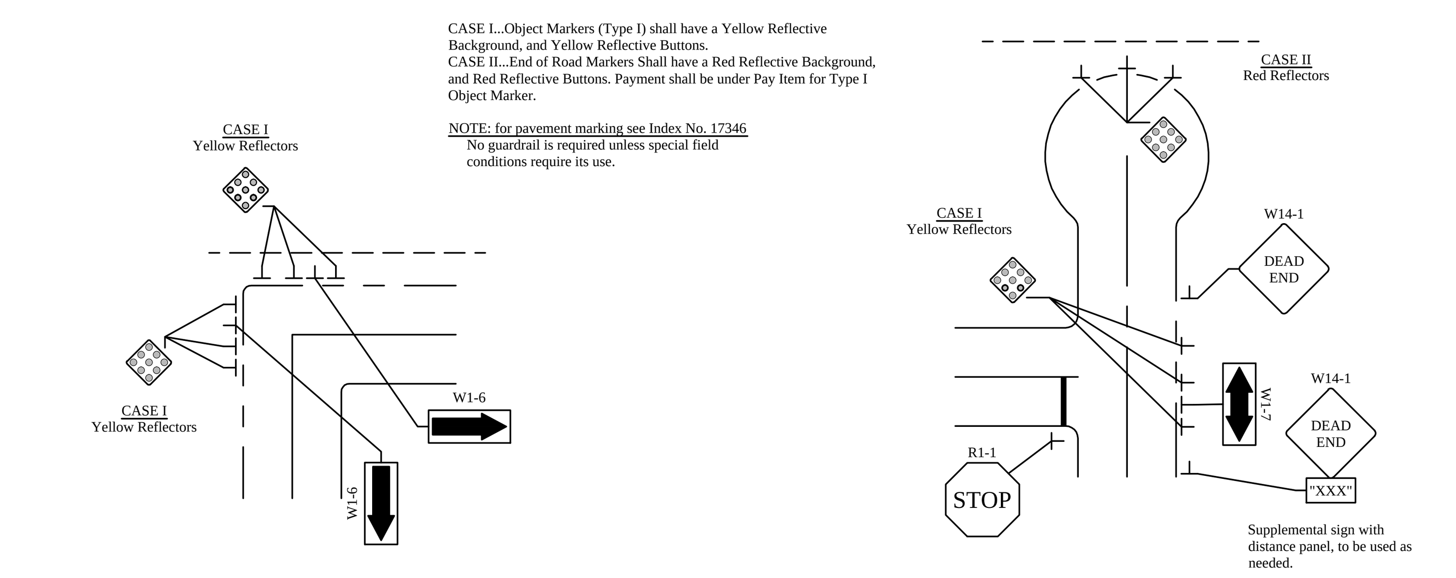

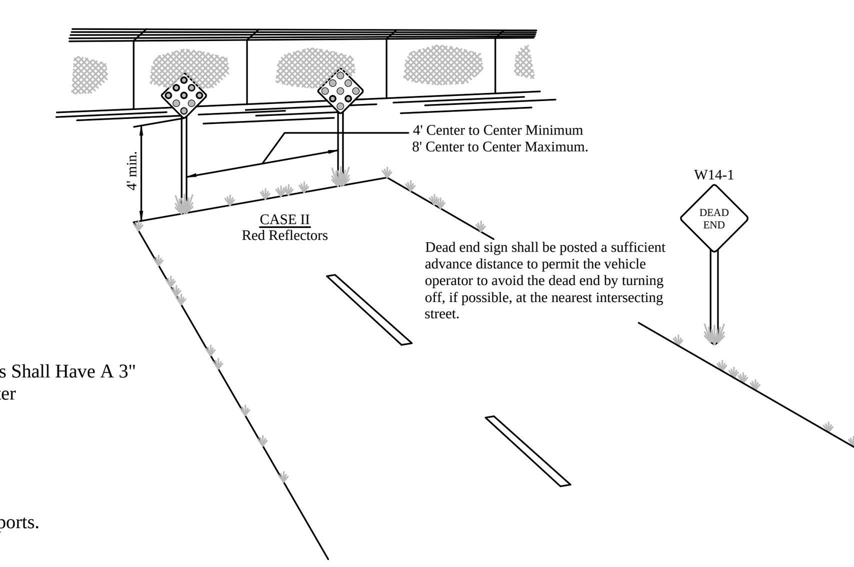

NOTES:

1. THIS INDEX APPLICABLE TO RESIDENTIAL AND MINOR STREETS ONLY MAJOR STREETS TO BE EVALUATED ON A CASE BY CASE BASIS.
2. "T"-INTERSECTION - TWO-WAY ARROWS AND REFLECTORS ARE OPTIONAL. THE NEED SHOULD BE BASED ON A REVIEW OF EACH LOCATION.
3. FOR ADDITIONAL DETAILS ON ALUMINUM ROUND POST, STEEL FLANGED CHANNEL POST, SIGN PANEL MATERIAL AND BOLTS, NUTS AND WASHERS SEE INDEX NOS. 11860 AND 11865.
4. CASE I INSTALLATION - THE ARROW PANELS AND OBJECT MARKERS SHALL BE LOCATED APPROXIMATELY 20 FEET, BUT NOT LESS THAN 12 FEET FROM THE EDGE OF THE TRAVEL LANE.

TRAFFIC CONTROLS FOR STREET TERMINATIONS
F.D.O.T. INDEX NO. 17349

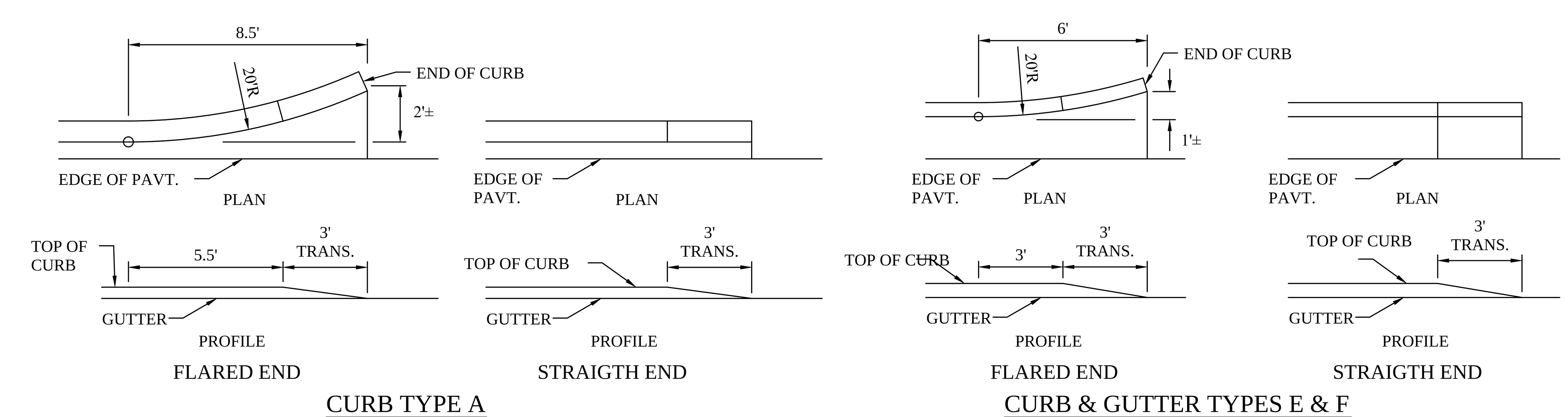

CURB & GUTTER ENDINGS

N.T.S.

PASCO COUNTY CRUSHED CONCRETE BASE SPECIFICATIONS

THE WORK SPECIFIED UNDER THIS SECTION CONSISTS OF THE CONSTRUCTION OF ROADWAY BASE UTILIZING CRUSHED CONCRETE (RECLAIMED CONCRETE AGGREGATE BASE MATERIAL) ON A PREPARED STABILIZED SUBGRADE OF LBR 40 WITH A DENSITY OF 98% OF THE MODIFIED PROCTOR MAXIMUM DENSITY AS DETERMINED BY FM 1-T 180, METHOD D, IN CONFORMITY WITH THE LINES, GRADES NOTES AND TYPICAL CROSS SECTIONS SHOWN IN THE PLANS, AND AS DIRECTED BY THE COUNTY ENGINEER.

THE CONSTRUCTION OF CRUSHED CONCRETE BASE SHALL CONFORM TO THE REQUIREMENTS OF THIS SECTION, OR, IN LIEU THEREOF, SUCH REQUIREMENTS AS MAY BE ESTABLISHED BY THE COUNTY ENGINEER DURING CONSTRUCTION. THE COUNTY ENGINEER SHALL HAVE FULL AUTHORITY TO MODIFY THE PROVISIONS OF THIS SECTION AS DEEMED NECESSARY, IN HIS OPINION, TO MEET FIELD CONDITIONS AND REQUIREMENTS.

MATERIALS

CRUSHED CONCRETE MUST BE PRODUCED FROM A SOURCE APPROVED BY FLORIDA DEPARTMENT OF TRANSPORTATION OR THE COUNTY ENGINEER. THE SUPPLIER SHALL HAVE DEPARTMENT OF ENVIRONMENTAL PROTECTION (DEP) PERMIT REQUIREMENTS SECTION 62-701.730 OR BE QUALIFIED AS A CLEAN DEBRIS SOURCE UNDER DEP RULES. THE RECLAIMED CONCRETE AGGREGATE BASE SHALL CONSIST OF CRUSHED CONCRETE MATERIAL DERIVED FROM THE CRUSHING OF HARD PORTLAND CEMENT CONCRETE.

COMPOSITION

BASE MATERIAL SHALL CONFORM TO THE FOLLOWING **GRADATION REQUIREMENTS**:

SIEVE SIZE	PERCENT BY WEIGHT PASSING
2 INCH	100
3/4 INCH	65 to 95
3/8 INCH	40 to 85
No. 4	25 to 65
No. 10	20 to 50
No. 50	5 to 25
No. 200	0 to 10

BASE MATERIAL SHALL CONFORM TO THE FOLLOWING **PLASTICITY REQUIREMENTS**:

CRUSHED CONCRETE BASE SHALL NOT CONTAIN PLASTIC SOILS SUCH THAT THE No. 40 SIEVE MATERIAL SHALL BE NON-PLASTIC.

LIQUID LIMIT (AS DETERMINED BY AASHTO T80) (LESS THAN 25) PER MATERIAL TYPE

THE FINISHED IN-PLACE CRUSHED CONCRETE BASE **LIMEROCK BEARING RATIO** SHALL HAVE A MINIMUM (LBR) OF 150.

CRUSHED CONCRETE BASE SHALL BE FREE OF ALL MATERIALS THAT FALL UNDER THE CATEGORY OF SOLID WASTE OR HAZARD MATERIALS AS DEFINED BY THE STATE OR LOCAL JURISDICTION AND SHALL MEET ALL DEP PERMIT REQUIREMENTS WHICH PERTAIN TO CONSTRUCTION, DEMOLITION AND RECYCLING OF THESE MATERIALS. CRUSHED CONCRETE BASE SHALL BE ASBESTOS FREE. THE FOLLOWING LIMITS SHALL NOT BE EXCEEDED:

BITUMINOUS CONCRETE........1% BY WEIGHT
BRICKS........1% BY WEIGHT
WOOD AND OTHER ORGANIC SUBSTANCES........0.5% BY WEIGHT
HEAVY METALS (EXCEPT LEAD)........0.1% BY WEIGHT
LEAD........5 PARTS PER MILLION
REINFORCED STEEL AND WELDED WIRE FABRIC........0.1% BY WEIGHT
PLASTER AND GYPSUM BOARD........0.1% BY WEIGHT

THE MATERIAL FOR CRUSHED CONCRETE BASE SHALL CONSIST ONLY OF CRUSHED CONCRETE PAVEMENT AND SUCH ADDITIVE MATERIAL AS MAY BE APPROVED BY THE COUNTY ENGINEER FOR THE PURPOSE OF FACILITATING CONSTRUCTION AND ACHIEVING THE DESIRED CHARACTERISTICS OF THE FINISHED IN-PLACED PRODUCT. APPROVAL FROM THE COUNTY ENGINEER IS REQUIRED BEFORE PLACING MATERIAL FROM MORE THAN ONE SOURCE. ONCE APPROVED, A CHANGE IN THE SOURCE OF BASE MATERIAL SHALL REQUIRE ADDITIONAL ACCEPTANCE TESTING. THE MATERIAL SHALL NOT CONTAIN LUMPS, BALLS OR POCKETS OF SAND OR CLAY MATERIAL IN SIZE OR QUANTITY SUFFICIENT TO BE DETRIMENTAL TO THE PROPER BONDING, FINISHING, STRENGTH OF THE CONCRETE BASE. EXISTING BASE IS TO BE REMOVED TO CONSTRUCT THE NEW BASE.

NOTE:
NO DEVIATIONS TO THIS DETAIL WILL BE PERMITTED UNLESS APPROVED BY THE COUNTY ENGINEER.
ANY PROPOSED ALTERATIONS SHALL BE CLEARLY IDENTIFIED AND HIGHLIGHTED ON DETAIL.

PASCO COUNTY ENGINEERING SERVICES — DESIGN STANDARDS | CRUSHED - CONCRETE BASE SPECIFICATIONS | APPROVED BY JCW | BCC APPROVAL | REVISED | Sheet No. 1 of 2 | Index No. 104

C:\Standards\Final\NEW Index #\104_Crush-Conc_BaseSpec.dwg 05/15/09

EQUIPMENT, PLACEMENT AND SPREADING OF MATERIAL

USE MECHANICAL ROCK SPREADERS, EQUIPPED WITH A DEVICE THAT STRIKES OFF THE ROCK UNIFORMLY TO LAYING THICKNESS AND CAPABLE OF PRODUCING EVEN DISTRIBUTION. FOR ROADWAY WIDTHS OF 20 FEET OR LESS, CROSSOVERS, INTERSECTIONS, RAMP AREAS OR WHERE THE USE OF A MECHANICAL SPREADER IS NOT PRACTICABLE; THE CONTRACTOR MAY SPREAD THE CRUSHED CONCRETE BASE USING BULLDOZERS OR BLADE GRADERS.

TRANSPORT CRUSHED CONCRETE TO THE POINT OF USE, OVER THE BASE PREVIOUSLY PLACED, AND DUMP IT ON THE END OF THE PRECEDING SPREAD. HAULING ON SUBGRADE TO DUMP CRUSHED CONCRETE BASE WILL BE PERMITTED ONLY WHEN, IN THE ENGINEER'S OPINION, THESE OPERATIONS WILL NOT BE DETRIMENTAL TO THE BASE AND SUBGRADE.

CRUSHED CONCRETE SHALL BE SPREAD UNIFORMLY WITHOUT SEGREGATION OF FINE OR COURSE MATERIALS. SEGREGATED AREAS SHALL BE REPLACED WITH PROPERLY GRADED CRUSHED CONCRETE AFTER REMOVAL.

THE MINIMUM THICKNESS OF THE CRUSHED CONCRETE BASE SHALL BE INDICATED ON THE PLANS. WHEN THE SPECIFIED COMPACTED THICKNESS OF THE CRUSHED CONCRETE BASE IS **GREATER THAN SIX INCHES, CONSTRUCT THE BASE IN MULTIPLE COURSES OF EQUAL THICKNESS. INDIVIDUAL COURSES SHALL NOT BE LESS THAN THREE INCHES.** PLACE CRUSHED CONCRETE MATERIAL TO ENSURE THE TOTAL THICKNESS SINGLE SOURCE INTEGRITY AT ANY STATION LOCATION OF THE BASE.

COMPACTING, FINISHING AND TESTING REQUIREMENTS

AFTER SPREADING IS COMPLETED THE CRUSHED CONCRETE SHALL BE UNIFORMLY COMPACTED, WITH WATER BEING ADDED AS REQUIRED TO A **DENSITY OF NOT LESS THAN ONE HUNDRED PERCENT (100%) OF THE MAXIMUM DENSITY AS DETERMINED BY AASHTO T-180.** DURING FINAL COMPACTION OPERATIONS, IF THE BLADING OF ANY AREAS IS NECESSARY TO OBTAIN THE TRUE GRADE AND CROSS SECTION, FREE OF SCABS AND LAMINATIONS, THE COMPACTING OPERATIONS FOR SUCH AREAS SHALL BE COMPLETED PRIOR TO THE PERFORMANCE OF DENSITY TESTS ON THE FINISHED BASE.

MULTIPLE COURSE BASE: CLEAN THE FIRST COURSE OF FOREIGN MATERIAL, THEN BLADE AND BRING IT TO A SURFACE CROSS-SECTION APPROXIMATELY PARALLEL TO THE FINISHED BASE. BEFORE SPREADING ANY MATERIAL FOR THE UPPER COURSES, **OBTAIN DENSITY TESTS FOR THE LOWER COURSES** TO DETERMINE THAT THE REQUIRED COMPACTION [NOT LESS THAN ONE HUNDRED PERCENT (100%) OF THE MAXIMUM DENSITY AS DETERMINED BY AASHTO T-180] HAS BEEN OBTAINED. AFTER SPREADING THE CRUSHED CONCRETE FOR THE TOP COURSE, FINISH AND SHAPE IT'S SURFACE TO PRODUCE THE REQUIRED GRADE AND CROSS-SECTION, FREE OF SCABS AND LAMINATIONS, AFTER COMPACTION.

THE MINIMUM DENSITY THAT WILL BE ACCEPTED AT ANY LOCATION OUTSIDE THE TRAVELED ROADWAY (SUCH AS INTERSECTIONS, CROSSOVERS, TURNOUTS, ETC.) SHALL BE 98% OF THE MAXIMUM DENSITY AS DETERMINED BY AASHTO T-180.

TESTING OF BASE COURSE

THE MINIMUM **FREQUENCY** OF SAMPLING AND TESTING OF CRUSHED CONCRETE MATERIAL, LAB DENSITY, FIELD DENSITY AND THICKNESS SHALL ADHERE TO THE FREQUENCY OF TESTING FOR LIMEROCK BASE IN THE MOST CURRENT EDITION OF "**PASCO COUNTY ENGINEERING SERVICES DEPARTMENT TESTING SPECIFICATIONS FOR CONSTRUCTION OF ROADS, STORM DRAINAGE AND UTILITIES**". ONE PLANT MIX DESIGN, ONE PLANT GRADATION TEST FOR SIEVE ANALYSIS OF FINE AND COARSE AGGREGATES (AASHTO T-27) (FM1-T027) INCLUDING A PLASTICITY INDEX (FM-T090) (AASHTO T-90) FROM THE APPROVED SOURCE SHALL BE SUBMITTED AT ONE PER DAY OR CHANGE OF MATERIAL. ONE ROADWAY FIELD TEST FOR SIEVE ANALYSIS OF FINE AND COARSE AGGREGATES (ASTM C-136) SHALL BE SUBMITTED PER 500 FEET OF ROAD PER DAY PER MIX DESIGN; MINIMUM ONE PER ROAD.

THE CONTRACTOR SHALL BE RESPONSIBLE FOR ALL TESTING PERFORMED IN CONNECTION WITH CONSTRUCTION OF THE BASE.

CORRECTION OF DEFECTS

ALL SEGREGATED AREAS OF FINE OR COURSE CRUSHED CONCRETE SHALL BE REMOVED AND REPLACED WITH PROPERLY GRADED RECLAIMED CONCRETE AGGREGATE BASE MATERIAL. ALL DEFECTS IN MATERIALS AND CONSTRUCTION SHALL BE CORRECTED BY THE CONTRACTOR, AT HIS EXPENSE, AND TO THE SATISFACTION OF THE COUNTY ENGINEER.

PRIMING AND MAINTENANCE

APPLY THE PRIME COAT ONLY WHEN THE BASE MEETS THE SPECIFIED DENSITY REQUIREMENTS AND WHEN THE MOISTURE CONTENT. AT THE TIME OF PRIMING, ENSURE THAT THE BASE IS FIRM, UNYIELDING AND IN SUCH CONDITION THAT NO UNDUE DISTORTION WILL OCCUR. MAINTAIN THE TRUE CROWN AND TEMPLATE, WITH NO RUTTING OR DISTORTION, WHILE APPLYING THE SURFACE COURSE.

PASCO COUNTY TESTING SPECIFICATIONS ON CRUSHED CONCRETE BASE

TESTS FOR BASE THICKNESS, AND DENSITY SHALL BE LOCATED NO MORE THAN THREE HUNDRED (300) FEET APART AND SHALL BE STAGGERED TO THE LEFT, RIGHT, AND ON THE CENTERLINE OF ROADWAY. THERE SHALL BE NO LESS THAN ONE (1) TEST PER STREET. BEARING VALUE, GRADATION AND FIELD TEST FOR SIEVE ANALYSIS OF FINE AND COARSE AGGREGATES (ASTM C-136) SHALL BE NO MORE THAN FIVE HUNDRED (500) FEET.

EXAMPLE: A SEVEN HUNDRED FEET ROAD WOULD REQUIRE TWO FIELD LBR AND GRADATION TESTS, THREE FIELD DENSITY AND THICKNESS TESTS ALONG WITH THE APPROPRIATE LAB TESTING.

NOTE:
NO DEVIATIONS TO THIS DETAIL WILL BE PERMITTED UNLESS APPROVED BY THE COUNTY ENGINEER.
ANY PROPOSED ALTERATIONS SHALL BE CLEARLY IDENTIFIED AND HIGHLIGHTED ON DETAIL.

PASCO COUNTY ENGINEERING SERVICES — DESIGN STANDARDS | CRUSHED - CONCRETE BASE SPECIFICATIONS | APPROVED BY JCW | BCC APPROVAL | REVISED | Sheet No. 2 of 2 | Index No. 104

C:\Standards\Final\NEW Index #\104_Crush-Conc_BaseSpec.dwg 05/15/09

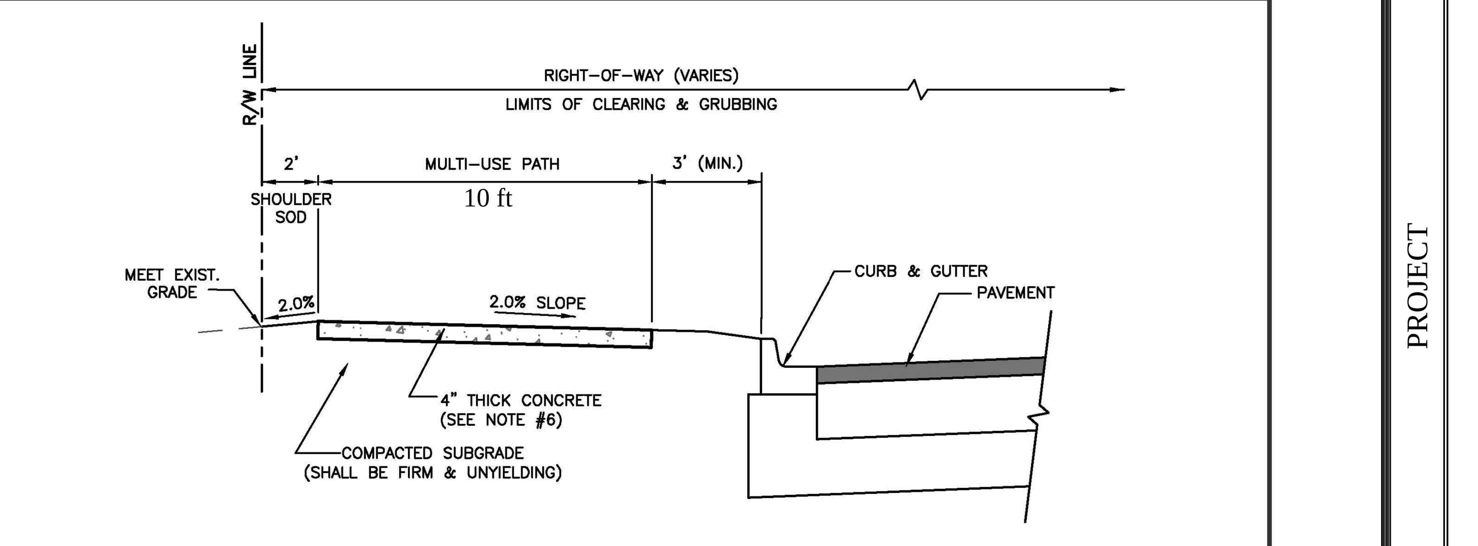

CONCRETE MULTI-USE PATH - TYPICAL SECTION
NTS

DESIGN PARAMETERS:

- DESIGN SPEED 20 MPH.
- MIN. RADIUS 150'
- CLEAR ZONE WIDTH – (2' WIDE FLAT AREA)
- VERTICAL CLEARANCE – 8' MIN. (10' RECOMMENDED) (10' MIN. FOR EQUESTRAIN USE)
- HORIZONTAL CLEARANCE 2' MINIMUM

SIDEWALK NOTES:

1. ALL CONCRETE SHALL BE 3,000 P.S.I. FIBER-REINFORCED.
2. TOOL RADIUS ALL EXPOSED EDGES.
3. CONSTRUCTION JOINTS @ 8 FT. INTERVALS.
4. 1/2" EXPANSION JOINTS @ 100 FT. INTERVALS.
5. SURFACE SHALL BE SANDY TEXTURE BROOM FINISH.
6. ALL PATHS SUBJECT TO LIGHT VEHICULAR TRAFFIC SHALL BE A MINIMUM OF 6" THICK, I.E., DRIVEWAYS. PATHS AT COMMERCIAL ENTRANCES SHALL BE A MINIMUM OF 8" THICK.
7. IF AREA BETWEEN CURB AND MULTI-USE PATH IS NOT ASPHALT OR CONCRETE, SOD SHALL BE UTILIZED.

NOTE:
NO DEVIATIONS TO THIS DETAIL WILL BE PERMITTED UNLESS APPROVED BY THE COUNTY ENGINEER.
ANY PROPOSED ALTERATIONS SHALL BE CLEARLY IDENTIFIED AND HIGHLIGHTED ON DETAIL.

PASCO COUNTY ENGINEERING SERVICES — DESIGN STANDARDS | CONCRETE MULTI-USE PATH - TYPICAL SECTION - URBAN ROADWAY | APPROVED BY JCW | BCC APPROVAL | REVISED | Sheet No. 1 of 1 | Index No. 108

08/09/08

REVISIONS

NO.	DATE	DESCRIPTION	BY
1.	02-02-15	Revisions Per County Comments	ELR
2.	03-03-15	SWFWMD Resubmittal	ELR
3.	03-08-15	Access connection and Sidewalk	JAC
4.	08-07-15	County Resubmittal	ELR
5.	09-22-15	County Resubmittal - Address Comments Mod 1	ELR
6.			
7.			
8.			
9.			

Engineering ~ Planning
Environmental Science
4260 West Linebaugh Avenue
Tampa, Florida 33624
Phone: 813.265.3130 Fax: 813.265.6610
www.wraengineering.com CA 00007652

DRAWING: ROADWAY DETAILS
DESIGNED: JAC DRAWN: ELR APPROVED: JAC

PROJECT: CYPRESS CREEK TOWN CENTER NORTH
JOB #: 0967 DATUM: NGVD 1929

JOSEPH A. CIMINO
FL P.E. # 67540

Original Date: 07-14-14
Sheet
C-305

CAD File Name: S:\~PROJECT FILES\0967 - PASCO 54 INC. - CCTC NORTH\CADD\PLANS\C-305_ROADWAY_DETAILS.DWG | Plot Date: 9/23/2015 11:54:46 AM | 2012 Water Resource Associates, Inc.

CAD File Name: S:\~PROJECT FILES\0967 - PASCO 54 INC. - CCTC NORTH\CADD\PLANS\C-306_DRAINAGE_DETAILS.DWG   Plot Date: 9/23/2015 11:54:54 AM   2012 Water Resource Associates, Inc.

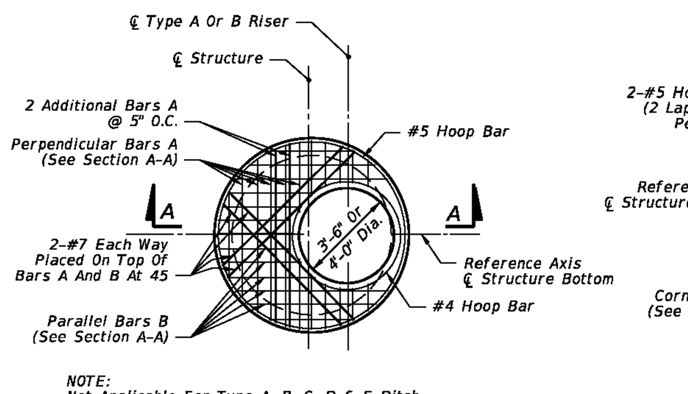

NOTE:
Not Applicable For Type A, B, C, D & E Ditch Bottom Inlets Or Type S & V Gutter Inlets. See Index Nos. 220, 221, 230, 231 & 232.

TOP SLAB REINFORCING STEEL DIAGRAM
(ALTERNATE A)

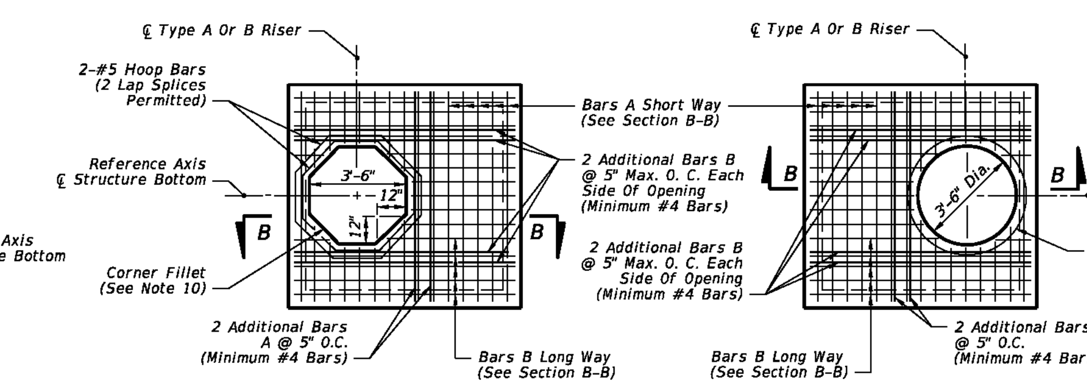

SQUARE OPENING WITH CORNER FILLETS   ROUND RISER OPENING
TOP SLAB REINFORCING STEEL DIAGRAM
(ALTERNATE B)

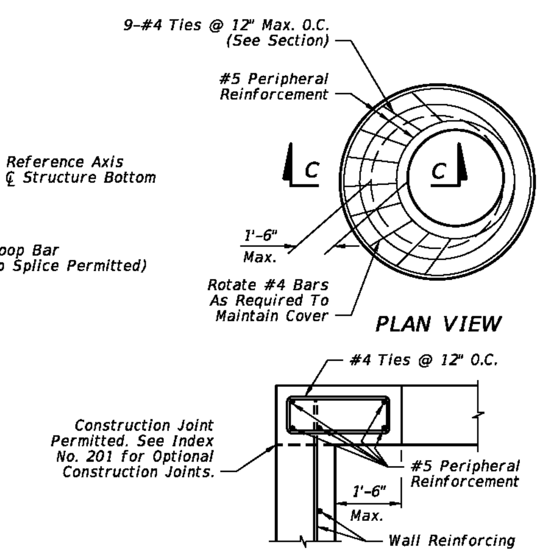

SECTION C-C
SPECIAL TOP SLAB*

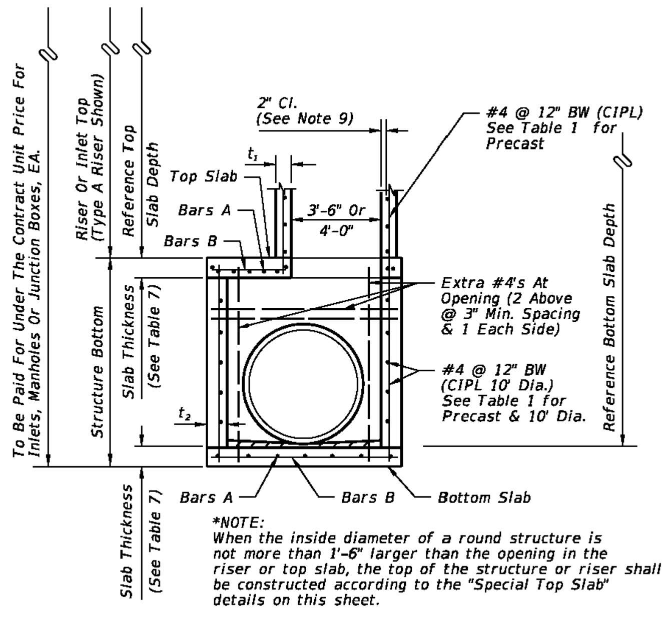

*NOTE:
When the inside diameter of a round structure is not more than 1'-6" larger than the opening in the riser or top slab, the top of the structure or riser shall be constructed according to the "Special Top Slab" details on this sheet.

SECTION A-A
(ALTERNATE A)

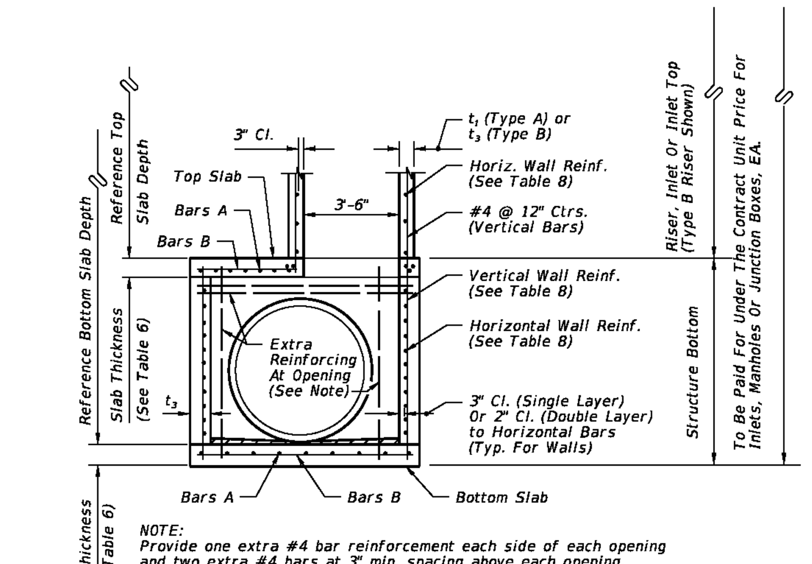

NOTE:
Provide one extra #4 bar reinforcement each side of each opening and two extra #4 bars at 3" min. spacing above each opening.

SECTION B-B
(ALTERNATE B)

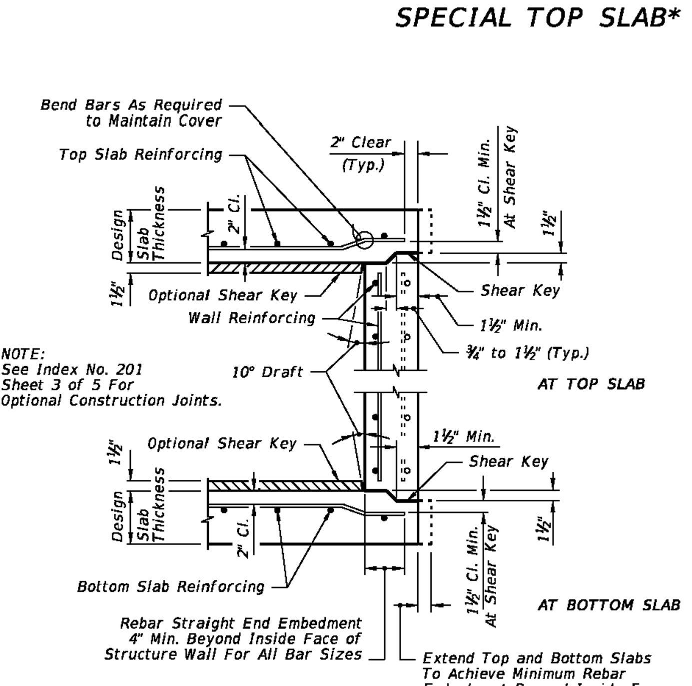

NOTE:
See Index No. 201 Sheet 3 of 5 For Optional Construction Joints.

TYPICAL SLAB TO WALL DETAILS
FOR PRECAST STRUCTURES

LAST REVISION	REVISION	DESCRIPTION:	FDOT DESIGN STANDARDS 2013	STRUCTURE BOTTOMS TYPE J AND P	INDEX NO.	SHEET NO.
01/01/10					200	1

SLAB DESIGNS - SQUARE AND RECTANGULAR STRUCTURES (TABLE 6)
(ALL SLABS 8" THICK EXCEPT AS NOTED - REINFORCING PARALLEL TO SHORT WAY AND LONG WAY)

SHORT-WAY SLAB DEPTH	SHORT-WAY SCHEDULE (Bars A)	LONG-WAY SLAB DEPTH	LONG-WAY SCHEDULE (Bars B)
SIZE: 3'-6" x UNLIMITED			
≥0.5' < 8'	B10	≥0.5' < 24'	B10
8' < 13'	B5.5	24'-40'	B5.5
13' < 31'	C6.5		
31'-40'	D7		
SIZE: 4' x UNLIMITED			
≥0.5' < 7'	B5.5	≥0.5' < 15'	B10
7' < 19'	C6.5	15' < 29'	B5.5
19' < 31'	D7	29'-40'	C6.5
31'-40'	E5		
SIZE: 5' x 5'			
≥0.5' < 3'	C6.5	≥0.5' < 3'	C6.5
3' < 7'	B5.5	3' < 13'	C6.5
7' < 22'	C6.5	13' < 22'	D7
22' < 29'	D7	22' < 29'	D4.5
29'-40'	E5	29'-40'	E5
SIZE: 5' x 6'			
≥0.5' < 12'	C6.5	≥0.5' < 3'	C6.5
12' < 26'	D7	3' < 9'	B5.5
26'-40'	E5	9' < 23'	C3.5
		23' < 35'	D4.5
		35'-40'	E5
SIZE: 5' x 7'			
≥0.5' < 10'	C6.5	≥0.5' < 10'	B5.5
10' < 20'	D7	10' < 31'	C3.5
20' < 34'	E5	31'-40'	D4.5
34'-40'	F5		
SIZE: 5' x 8'			
≥0.5' < 7'	C6.5	≥0.5' < 8'	B10
7' < 13'	D7	8' < 17'	B5.5
13' < 24'	E5	17' < 25'	C6.5
24'-40'	F5	25'-40'	C3.5
SIZE: 5' x 9'			
≥0.5' < 8'	C6.5	≥0.5' < 14'	B10
8' < 14'	D7	14' < 24'	B5.5
14' < 25'	E5	24' < 34'	C6.5
25'-40'	F5	34'-40'	C3.5
SIZE: 5' x UNLIMITED			
≥0.5' < 8'	C6.5	≥0.5' < 14'	B10
8' < 14'	D7	14' < 24'	B5.5
14' < 25'	E5	24' < 34'	C6.5
25'-40'	F5	34'-40'	C3.5

SHORT-WAY SLAB DEPTH	SHORT-WAY SCHEDULE (Bars A)	LONG-WAY SLAB DEPTH	LONG-WAY SCHEDULE (Bars B)
SIZE: 6' x 6'			
≥0.5' < 13'	C6.5	≥0.5' < 10'	C3.5
13' < 23'	D7	10' < 18'	D4.5
23'-40'	E5	18' < 27'	E5
		27' < 33'	E3
		33'-40'	F5
SIZE: 6' x 7'			
≥0.5' < 8'	C6.5	≥0.5' < 8'	C6.5
8' < 16'	D7	8' < 12'	C3.5
16' < 28'	E5	12' < 21'	D4.5
28'-40'	F5	21' < 28'	E5
		28' < 35'	E3
		35'-40'	F5
SIZE: 6' x 8'			
≥0.5' < 6'	C6.5	≥0.5' < 6'	B5.5
6' < 13'	D7	6' < 11'	C6.5
13' < 22'	E5	11' < 17'	C3.5
22' < 35'	F5	17' < 22'	D4.5
35'-40'	G5	22' < 32'	E5
		32'-40'	E3
SIZE: 6' x 9'			
≥0.5' < 8'	D7	≥0.5' < 8'	B5.5
8' < 14'	E5	8' < 14'	C6.5
14' < 24'	F5	14' < 21'	C3.5
24'-34'	G5	21' < 25'	D4.5
		25'-34'	E5
SIZE: 6' x UNLIMITED			
≥0.5' < 8'	D7	≥0.5' < 8'	B5.5
8' < 14'	E5	8' < 14'	C6.5
14' < 24'	F5	14' < 21'	C3.5
24'-34'	G5	21' < 25'	D4.5
		25'-34'	E5
SIZE: 7' x 7'			
≥0.5' < 8'	C6.5	≥0.5' < 4'	C6.5
8' < 15'	D7	4' < 7'	C3.5
15' < 26'	E5	7' < 11'	D4.5
26'-40'	F5	11' < 22'	E3
		22' < 32'	F3.5
		32'-40'	G3.5
SIZE: 7' x 8'			
≥0.5' < 5'	C6.5	≥0.5' < 5'	C6.5
5' < 11'	D7	5' < 8'	C3.5
11' < 19'	E5	8' < 13'	D4.5
19' < 30'	F5	13' < 22'	E3
30'-40'	G5	22' < 30'	F3.5
		30'-40'	G3.5
SIZE: 7' x 9'			
≥0.5' < 9'	D7	≥0.5' < 7'	C6.5
9' < 15'	E5	7' < 10'	C3.5
15' < 25'	F5	10' < 14'	D4.5
25' - 34'	G5	14' < 21'	E5
		21' < 29'	F5
		29'-34'	F3.5

SHORT-WAY SLAB DEPTH	SHORT-WAY SCHEDULE (Bars A)	LONG-WAY SLAB DEPTH	LONG-WAY SCHEDULE (Bars B)
SIZE: 8' x 8'			
≥0.5' < 10'	D7	≥0.5' < 9'	D4.5
10' < 19'	E5	9' < 13'	E5
19'-30'	F5	13' < 18'	F5
		18' < 23'	F3.5
		23'-30'	G3.5
SIZE: 8' x 9'			
≥0.5' < 8'	D7	≥0.5' < 7'	D7
8' < 14'	E5	7' < 9'	D4.5
14' < 23'	F5	9' < 15'	E3
23'-31'	G3.5	15' < 20'	F5
		20' < 23'	F3.5
		23'-31'	G3.5
SIZE: 9' x 9'			
≥0.5' < 8'	D7	≥0.5' < 7'	D4
8' < 14'	E5	7' < 10'	E5
14' < 22'	F5	10' < 17'	F3.5
		17' < 22'	G3.5
SIZE: 9'x9'x10" SLAB THICKNESS			
22' < 36'	F5	22' < 31'	F3.5
36'-40'	G5	31'-40'	G3.5
SIZE: 10'x10'x10" SLAB THICKNESS			
≥0.5' < 7'	C6.5	0.5' < 6'	C6.5
7' < 10'	D7	6' < 9'	D4.5
10' < 18'	E5	9' < 15'	E5
18' < 27'	F5	15' < 22'	F5
27'-32'	G5	22'-32'	G3.5
SIZE: 12'x12'x12" SLAB THICKNESS			
≥0.5' < 10'	D7	≥0.5' < 8'	D7
10' < 16'	E5	8' < 14'	E5
16' < 25'	F5	14' < 22'	F5
25'-35'	G5	22' < 30'	G5
		30'-35'	H4

SLAB DESIGNS - ROUND STRUCTURES (TABLE 7)

SLAB DEPTH	SLAB THICKNESS	REINF. (2-WAY) SCHEDULE
SIZE: 3'-6" DIAMETER		
2'-15'	6" Precast	C6.5
0.5' < 30'	8"	A6
30'-40'	8"	B5.5
SIZE: 4'-0" DIAMETER		
≥0.5' < 19'	8"	A6
19' < 30'	8"	B5.5
30'-40'	8"	C6.5
SIZE: 5'-0" DIAMETER		
≥0.5' < 15'	8"	B5.5
15' < 26'	8"	C6.5
26' < 35'	8"	D7
35'-40'	8"	D4.5
SIZE: 6'-0" DIAMETER		
≥0.5' < 9'	8"	B5.5
9' < 15'	8"	C6.5
15' < 22'	8"	C3.5
22' < 30'	8"	D4.5
30'-40'	8"	E5
SIZE: 7'-0" DIAMETER		
≥0.5' < 8'	8"	C3.5
8' < 16'	8"	D4.5
16' < 23'	8"	E5
23' < 27'	8"	E3
27'-40'	8"	F3.5
SIZE: 8'-0" DIAMETER		
≥0.5' < 10'	8"	D4.5
10' < 16'	8"	E5
16' < 19'	8"	E3
19' < 29'	8"	F3.5
29'-40'	10"	F5
SIZE: 10'-0" DIAMETER		
≥0.5' < 12'	10"	D4.5
12' < 20'	10"	E5
20' < 28'	10"	F5
28'-40'	10"	G3.5
SIZE: 12'-0" DIAMETER		
≥0.5' < 8'	10"	D4.5
8' < 13'	10"	E5
13' < 18'	10"	F5
18' < 26'	10"	G3.5
26'-40'	12"	G3.5

SLAB AND WALL DESIGN TABLE NOTES

1. Size is the inside dimension(s) of a structure.
2. Slab reinforcement is appropriate for top, intermediate, and bottom slabs.
3. Bottom Slabs for precast 3'-6" x 3'-6" rectangular structures at 15' depth or less, may be 6" thick.
4. Slab depth is measured from finished grade to top of slab.
5. Wall depth is measured to the top of the bottom slab for boxes and to the top of the intermediate slab for risers.
6. Wall height is the distance between top of lower slab to bottom of upper slab. Maximum wall height is 12' for wall lengths exceeding 5', or 10' for wall lengths exceeding 12'.
7. Wall lengths exceeding 6'-0" require two layers of reinforcing (See Table 8) with 2" of cover from the horizontal bars to the inside and outside faces for each layer.
8. Wall lengths exceeding the dimensions or depths shown in Table 8, or 12'-0" diameter require a special design.
9. Wall thickness and reinforcing for rectangular structures is the same for both long and short sides.
10. Reinforcing schedules with larger areas of steel may be substituted for schedules with smaller bar or wire spacing, except that Schedule B10 may not be substituted for Schedule A6. See Index 201, Sheet 4 for allowable bar spacing adjustments when larger areas of reinforcing are substituted.

LAST REVISION	REVISION	DESCRIPTION:	FDOT DESIGN STANDARDS 2013	STRUCTURE BOTTOMS TYPE J AND P	INDEX NO.	SHEET NO.
07/01/09					200	4

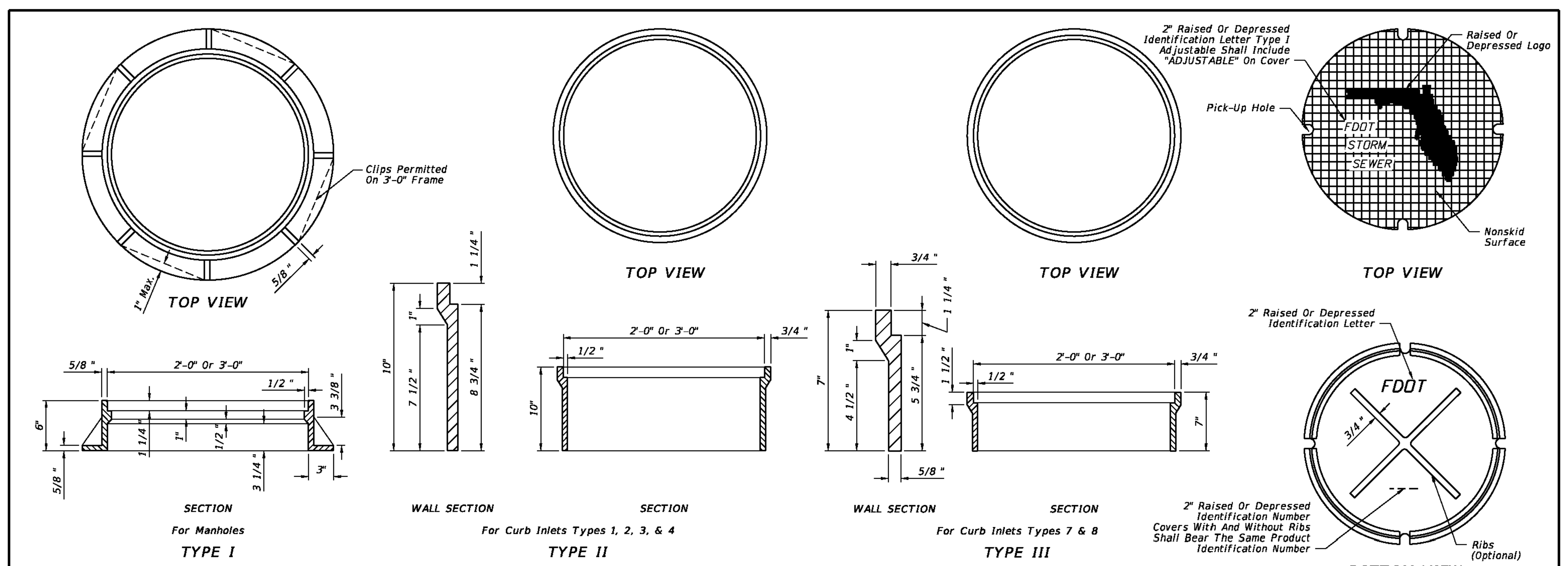

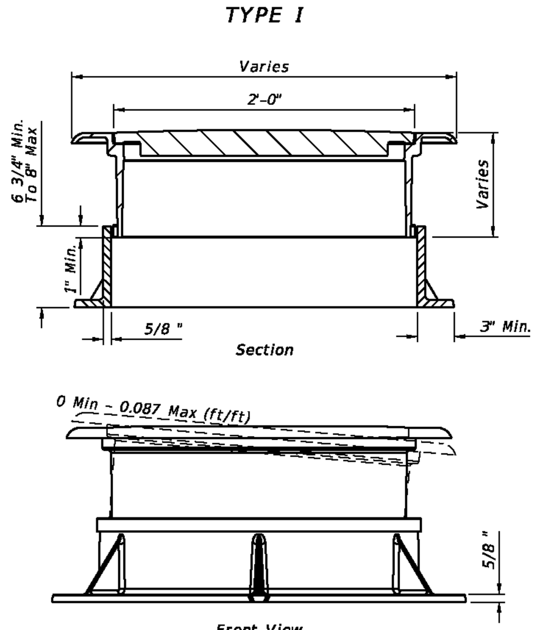

TYPE I ADJUSTABLE

Frame Type	2' OPENING Frame	2' OPENING Cover (Std.)	3' OPENING Frame	3' OPENING 2-Piece Cover Inside	3' OPENING 2-Piece Cover Outside	3' OPENING 2-Piece Cover Total
I *	155	190	220	190	220	410
II	145	190	255	190	220	410
III	90	190	180	190	220	410

WEIGHT OF CASTINGS (lb)

* Includes Type I Adjustable

NOTES (FRAMES, AND COVER)

1. The standard cover is to be used for all frames Types I, II, III and the 2-piece cover, and is the replacement cover for all previous frames with 1½" deep seats (traffic type). The 185 lb. cover (nontraffic type), 1984 Roadway and Traffic Design Standards Index No. 201, is the replacement cover for existing frames with ½" deep seats. Installation of frame with ½" deep seats is not permitted.
2. Use the 2'-0" cover, unless the 2-piece cover is called for in the plans, except at inlets and manholes with sump bottoms use the 2-piece cover when the sump depth exceeds 2', unless otherwise noted.

DESIGNER NOTE:

Consider using the 2-piece cover where depths exceed 5' and manual entry may be required for cleaning. Clearly note the requirement for a 2-piece cover, on the Drainage Structure sheets in the plans.

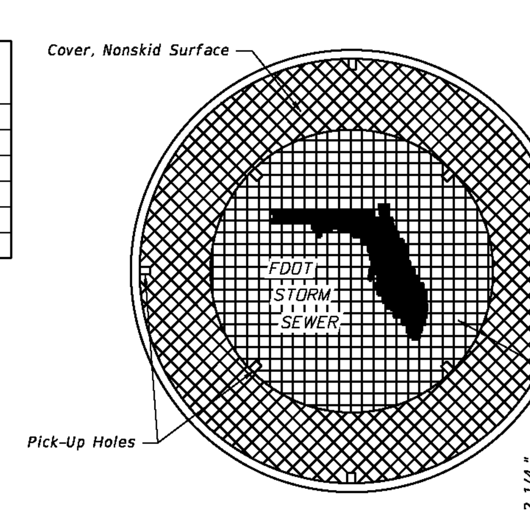

For Use With Types I, II And III Frames With 3'-0" Opening
2-PIECE COVER

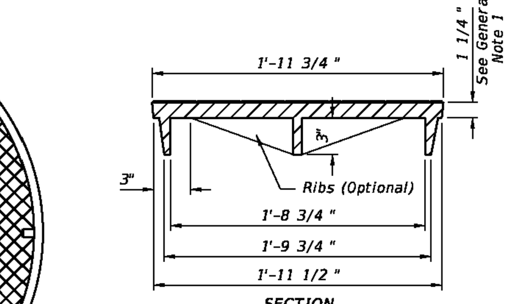

COVER FOR ALL FRAMES

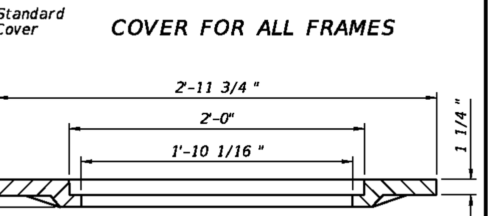

2-PIECE COVER

LAST REVISION	REVISION	DESCRIPTION:	FDOT DESIGN STANDARDS 2013	SUPPLEMENTARY DETAILS FOR MANHOLES & INLETS	INDEX NO.	SHEET NO.
01/01/12					201	1

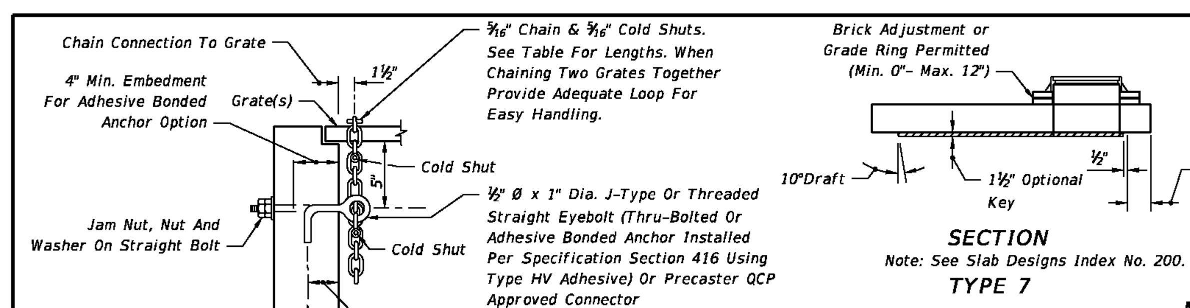

NOTE: When Alternate "G" grate is specified, the chain, bolt, nuts, washer and cold shuts shall be galvanized in accordance with Section 425 of the Standard Specifications.

Cost of eyebolt and chain to be included in the contract unit price for inlets.

EYEBOLT AND CHAIN REQUIREMENTS

Index Number	Inlet Type	Eye-Bolts	Length Of Chain	Handling & Remarks
217	(MB) 1	1	4'-0"	Slide & Spin
	(MB) 2	1	4'-0"	Slide & Spin
	(MB) 3	2	2 @ 4'-0"	Slide & Spin
	(MB) 4	2	2 @ 4'-0"	Slide & Spin
	(MB) 5	2	2 @ 4'-0"	Slide & Spin
218	(BW)	1	3'-8"	Slide Or Slide & Spin
219	(BW, RGD)	1	4'-0"	Slide & Spin
220	S	1	4'-0"	Slide & Spin
221	V	1	4'-0"	Slide & Spin
230	A	1	3'-0"	Slide
231	B	1	5'-0"	Slide & Spin
232	C	1	2'-6"	Slide & Spin
	D	1	2'-6"	Slide & Spin
	E	2	2 @ 2'-6"	Slide & Spin
	H	2	2 @ 2'-6"	Flip Ctr. Grate and Slide & Spin Single Free Grate
			1 or 2 @ 1'-6"	Ctr. Grate(s) Chained To One End Grate
233	F	1	3'-6"	Flip Or Slide & Spin
	G	1	6'-0"	Slide
			2'-0"	Lifting Loop
234	J	1	4'-0"	Slide & Spin

EYEBOLT AND CHAIN FOR LOCKING GRATES TO INLETS

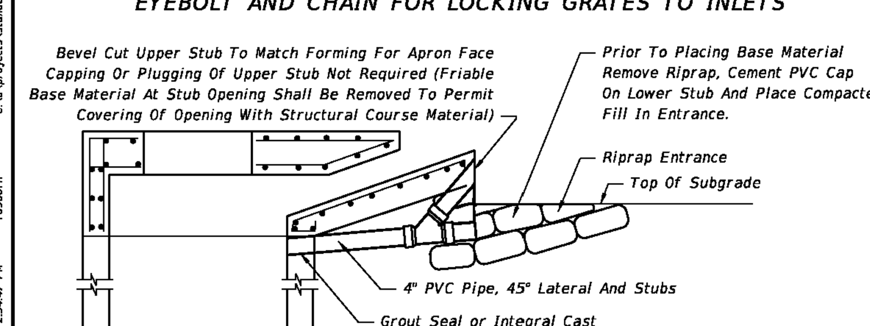

Note: Cost of pipe, fittings and sandbagging to be included in the contract unit price for inlets.

TEMPORARY DRAINS FOR SUBGRADE AND BASE

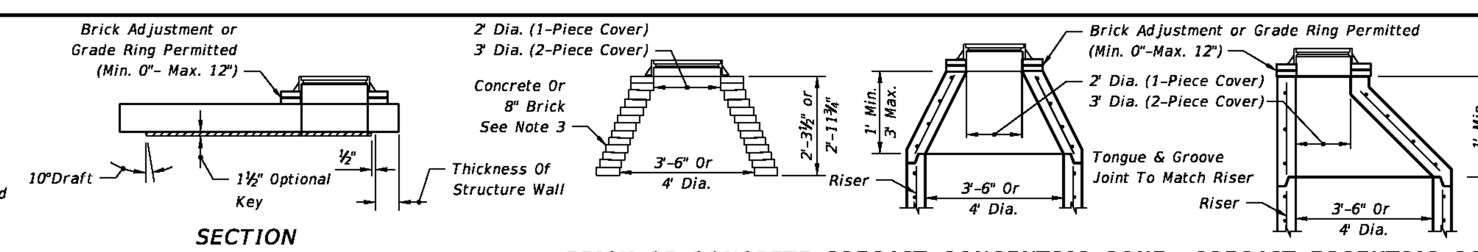

SECTION
Note: See Slab Designs Index No. 200.
TYPE 7

BRICK OR CONCRETE PRECAST CONCENTRIC CONE   PRECAST ECCENTRIC CONE
TYPE 8

MANHOLE TOPS

NOTES (TOPS)

1. Manhole top Type 7 slabs shall be of Class II concrete. Concrete as specified in ASTM C478 may be used for precast units; see General Note No. 3.
2. Manhole top Type 7 slabs may be of cast-in-place or precast construction. The optional key is for precast tops and in lieu of dowels. Frame and slab openings are to be omitted when top is used over a junction box.
3. Manhole top Type 8 may be of cast-in-place or precast concrete construction or brick construction. For concrete construction, the concrete and steel reinforcement shall be the same as the supporting wall unit. An eccentric cone may be used.
4. Manhole tops shall be secured to structures by optional construction joints as shown on Sheet 3.
5. Frames can be adjusted a maximum 12" height with brick or precast ASTM C478 grade rings.
6. Substitution of manhole top Type 8 for manhole top Type 7 is allowed provided that minimum dimensions shown above are not reduced.
7. Substitution of Manhole top Type 7 for Type 8 is allowed if the minimum thickness (h) above pipe opening cannot be maintained with manhole top Type 8.

DESIGN NOTES

1. Manhole top Type 8 should be specified in the plans when depths shown above can be maintained.

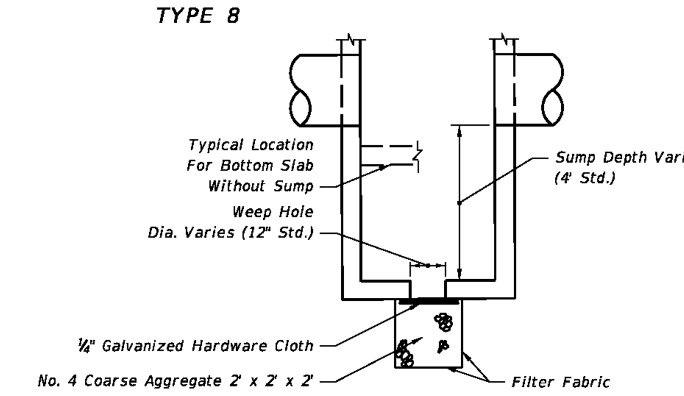

NOTE: Sump bottom appropriate for all manhole and inlet types. Sumps are to be constructed in inlet and manholes connected to French Drains unless excluded in the plans. At other locations, sump is to be constructed only where called for in the plans. Weep holes to be constructed in sump bottom only where called for in the plans. Cost of sump bottom and weep hole to be included in the contract unit price for inlet or manhole.

SUMP BOTTOM

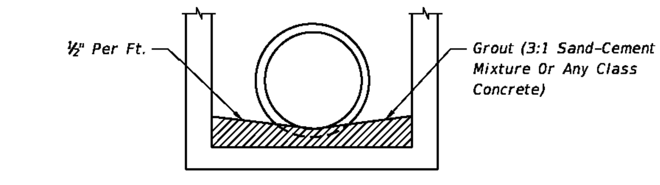

FOR ALL STRUCTURES UNLESS EXCLUDED BY SPECIAL DETAIL
ALL PIPE TYPES
DRAINAGE STRUCTURE INVERT

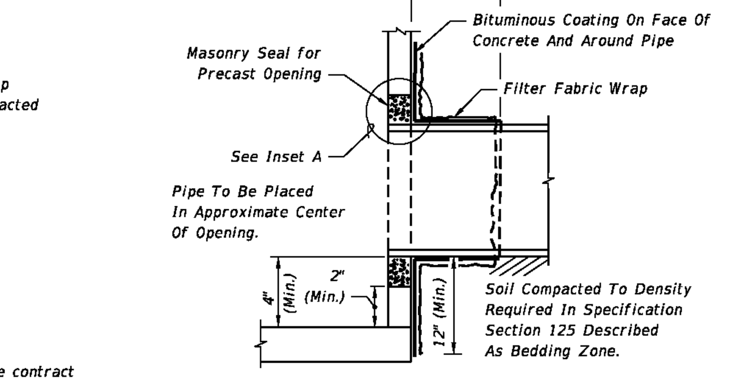

FILTER FABRIC WRAP ON GROUTED PIPE TO STRUCTURE JOINT

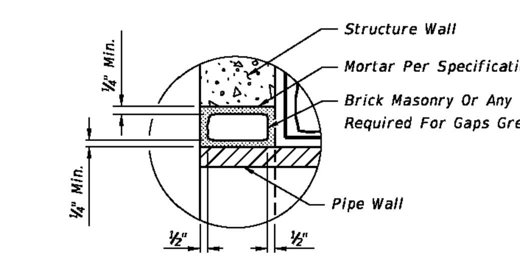

INSET A

LAST REVISION	REVISION	DESCRIPTION:	FDOT DESIGN STANDARDS 2013	SUPPLEMENTARY DETAILS FOR MANHOLES & INLETS	INDEX NO.	SHEET NO.
07/01/12					201	2

REVISIONS

NO.	DATE	DESCRIPTION	BY
1.	02-02-15	Revisions Per County Comments	ELR
2.	03-03-15	SWFWMD Resubmittal	ELR
3.	03-08-15	Access connection and Sidewalk	JAC
4.	08-07-15	County Resubmittal	ELR
5.	09-22-15	County Resubmittal - Address Comments Mod 1	ELR
6.			
7.			
8.			
9.			

Engineering ~ Planning
Environmental Science
4260 West Linebaugh Avenue
Tampa, Florida 33624
Phone: 813.265.3130 Fax: 813.265.6610
www.wraengineering.com CA 00007652

DRAWING
DRAINAGE DETAILS
DESIGNED: JAC DRAWN: ELR APPROVED: JAC

PROJECT
CYPRESS CREEK
TOWN CENTER NORTH
JOB #: 0967 DATUM: NGVD 1929

JOSEPH A. CIMINO
FL P.E. # 67540

Original Date: 07-14-14
Sheet
C-306

CAD File Name: S:\~PROJECT FILES\0967 - PASCO 54 INC. - CCTC NORTH\CADD\PLANS\C-306_DRAINAGE_DETAILS.DWG
Plot Date: 9/23/2015 11:54:59 AM
2012 Water Resource Associates, Inc.

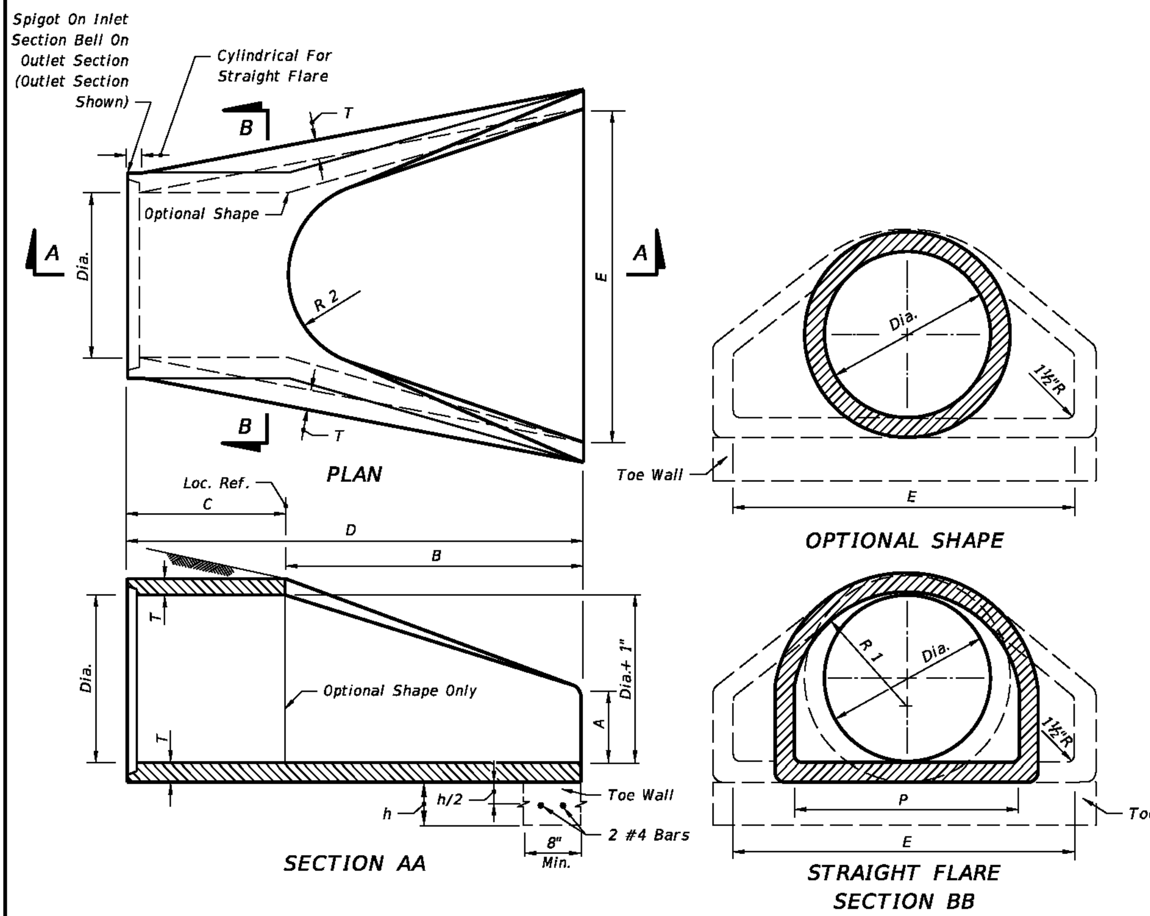

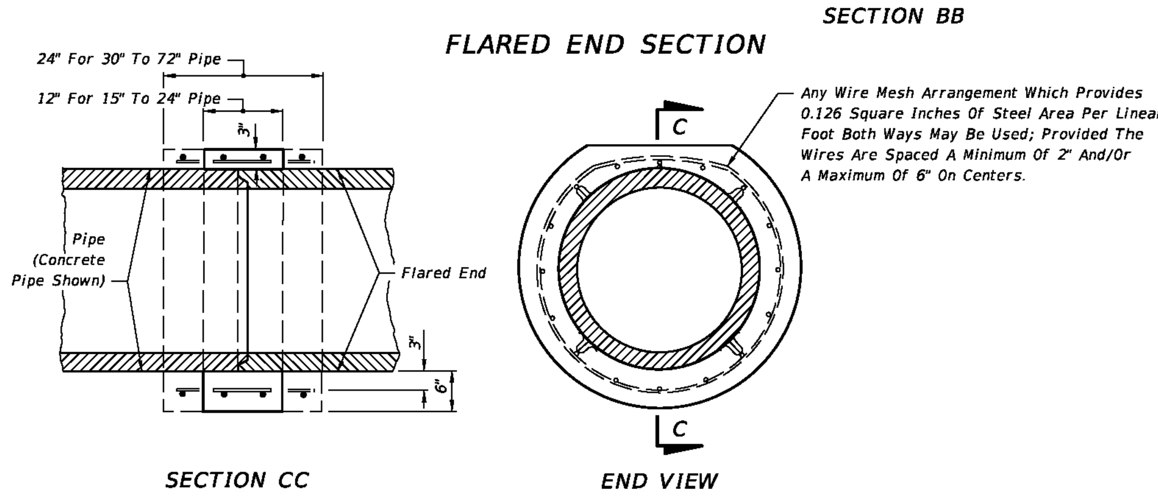

DIA.	T	REINF. (in²/ft)	BELL Or Spigot	A	B	C	D	E	P	R 1	R 2	FLAT	WEIGHT (lb)	h	TOE WALL CLASS I CONC (CY)
12"	2"	0.07	1½"	4"	2'-0"	4'-0⅞"	6'-0⅞"	2'-0"	19 15/16"	10⅛"	9"	3½"	530	12"	.06
15"	2¼"	0.07	2"	6"	2'-3"	3'-10"	6'-1"	2'-6"	24 5/16"	12½"	11"	3½"	740	12"	.07
18"	2½"	0.07	2½"	9"	2'-3"	3'-10"	6'-1"	3'-0"	29"	15½"	12"	4"	990	15"	.11
21"	2¾"	0.07	2¼"	9"	2'-11"	3'-2"	6'-1"	3'-6"	31⅝"	16⅛"	13"	4"	1280	15"	.12
24"	3"	0.07	2½"	9½"	3'-7½"	2'-6"	6'-1½"	4'-0"	33 3/16"	16 13/16"	14"	4½"	1520	18"	.17
27"	3¼"	0.148	2½"	10½"	4'-0"	2'-1½"	6'-1½"	4'-6"	36"	18 9/16"	14½"	4½"	1930	18"	.19
30"	3½"	0.148	3"	1'-0"	4'-6"	1'-7¾"	6'-1¾"	5'-0"	37"	18½"	15"	5"	2190	21"	.24
36"	4"	0.148	3½"	1'-3"	5'-3"	2'-10¾"	8'-1¾"	6'-0"	47 13/16"	24 5/16"	20"	5½"	4100	21"	.29
42"	4½"	0.148	3¾"	1'-9"	5'-3"	2'-11"	8'-2"	6'-6"	53⅞"	27½"	22"	5½"	5380	24"	.36
48"	5"	0.148	4¼"	2'-0"	6'-0"	2'-2"	8'-2"	7'-0"	56½"	28½"	22"	5¾"	6550	24"	.39
54"	5½"	0.174	4¾"	2'-3"	5'-5"	2'-11"	8'-4"	7'-6"	65½"	33⅛"	24"	6¼"	8040	24"	.42
60"	6"	0.174	5"	2'-6"	5'-0"	3'-3"	8'-3"	8'-0"	72½"	36 11/16"	24"	6¾"	8750	24"	.44
66"	6½"	0.174	5½"	2'-0"	6'-6"	1'-9"	8'-3"	8'-6"	72"	36⅛"	24"	7¼"	10630	24"	.47
72"	7"	0.174	6"	2'-0"	6'-6"	1'-9"	8'-3"	9'-0"	77 13/16"	38 15/16"	24"	7¾"	12520	24"	.50

GENERAL NOTES

1. Flared end sections shall conform to the requirements of ASTM C76 with the exception that dimensions and reinforcement shall be as prescribed in the table above. Circumferential reinforcement may consist of either one cage or two cages of steel. Compressive strength of concrete shall be 4000 psi. Shop drawings for flared end sections having dimensions other than above must be submitted for approval to the State Drainage Engineer.

2. Connections between the flared end section and the pipe culvert may be any of the following types unless otherwise shown on the plans.

   a. Joints meeting the requirements of Section 449 of the Standard Specifications (O-Ring Gasket). Flared end section joint dimensions and tolerances shall be identical or compatible to those used in the pipe culvert joint. When pipe culvert and flared end section manufacturers are different, the compatibility of joint designs shall be certified to by the manufacturer of the flared end sections.

   b. Joints sealed with preformed plastic gaskets. The gaskets shall meet the requirements of Section 942-2 of the Standard Specifications and the minimum sizes for gaskets shall be as that specified for equivalent sizes of elliptical pipe.

   c. Reinforced concrete jackets, as detailed on this drawing. Cost of the reinforced concrete jacket to be included in the contract unit price for the flared end section. When non-coated corrugated metal pipe is called for in the plans, the pipe shall be bituminous coated in the jacketed area as specified on Index No. 280. Bituminous coating to be included in the contract unit price for the pipe culvert. Concrete jacket shall be as specified on Index No. 280. Cost of concrete and reinforcement shall be included in the contract unit price for the pipe culvert.

3. Toe walls shall be constructed when shown on the plans or at locations designated by the Engineer. Toe walls are to be cast-in-place with Class I Concrete and paid for under the contract unit price for Flared End Section (Concrete), EA. Reinforcing steel shall also be included in the cost of the Flared End Section (Concrete), EA.

4. On skewed pipe culverts the flared end sections shall be placed in line with the pipe culvert. Side slopes shall be warped as required to fit the flared end sections.

5. Flared End Section to be paid for under the contract unit price for Flared End Section (Concrete), EA. Sodding shall be in accordance with Index No. 281, and paid for under the contract unit price for Performance Turf, SY.

DESIGN NOTES

1. Flared end sections are intended for use outside the clear zone on median drain and cross drain installation, except that flared end sections for pipe sizes 12" and 15" are permitted within the clear zone. When the slope intersection permits, 12" and 15" flared end sections may be located with the culvert opening as close as 8' beyond the outside edge of the shoulder. Flared end sections are not intended for side drain installations.

2. Reinforced concrete jackets shall be used at all locations where high velocities and/or highly erosive soils may cause disjointing. These locations are to be shown on the plans.

3. Toe walls shall be used whenever the anticipated velocity of discharge and soil type are such that erosive action would occur. Toe walls are not required where ditch pavement is provided, except when disjointing would occur if the ditch pavement should fail.

6/28/2012 2:37:36 PM rd960rh C:\d\projects\standards\roadway\00200-s\00270-01.dgn

LAST REVISION	REVISION	DESCRIPTION:	FDOT DESIGN STANDARDS 2013	FLARED END SECTION	INDEX NO.	SHEET NO.
07/01/09					270	1

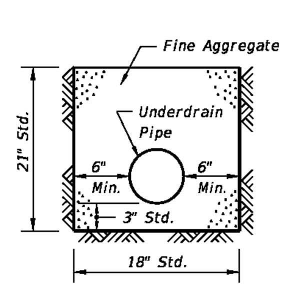

TYPE I

GENERAL NOTES

1. The underdrain pipe shall be either 4" smooth or 5" corrugated tubing unless otherwise shown in the plans. The size to be furnished will be based on the nominal internal diameter of a pipe with a smooth interior wall. Except when prohibited by the plans, the special provisions or this standard, pipe with a corrugated interior wall may be provided based on the following size equivalency.

   4" smooth interior equivalent to 5" corrugated interior
   5" smooth interior equivalent to 6" corrugated interior
   6" smooth interior equivalent to 8" corrugated interior
   8" smooth interior equivalent to 10" corrugated interior

2. Fine aggregate shall be quartz sand meeting the requirements of Sections 902-4 of the Standard Specifications.

3. Coarse aggregate shall be gravel or stone meeting the requirements of Sections 901-2 or 901-3. The gradation shall meet Section 901, Grades 4, 467, 5, 56 or 57 stone unless otherwise shown restricted in the plans.

4. Underdrain Type I, II, III and V shall be in accordance with Section 440.

5. Filter fabric shall be Type D-3 (See Index No. 199). The internal filter fabric of Type V underdrain shall have a permittivity of 0.7 /sec. and an AOS of #40 sieve.

6. When Type I is used, a filter fabric sock meeting Section 948 is required.

7. See Index No. 500 for the standard location of Type I, II, and III underdrain. The location of Type V underdrain and nonstandard locations of Type I, II, and III underdrain will be as detailed in the plans.

8. All filter fabric joints shall overlap a minimum of 1'. The internal filter fabric of Type V underdrain shall overlap into the coarse aggregate or the fine aggregate a minimum of 1'.

9. Underdrain outlet pipes shall be nonperforated and all bends shall be made using ⅛ (45 deg.) elbows. 90 deg. bends shall be constructed with two ⅛ elbows separated by at least 1' of straight pipe. Outlet pipes stubbed into inlets or other drainage structures shall be not less than 6" above the structure flow line. Outlet pipes discharging to grassed areas shall have concrete aprons, hardware cloth, and bordering sod as shown in Index No. 287 for Edgedrain outlets.

10. Pay Item shall be based on the size of the smooth interior products. The contract unit price for Underdrain, LF, shall include the cost of pipe, fittings, aggregate, sock, filter fabric, underdrain cleanouts, and concrete aprons.

    The contract unit price for Underdrain Outlet Pipe, LF, shall be full compensation for trench excavation, pipe and fittings, concrete aprons, hardware cloth for concrete aprons, stubbing into drainage structures, backfill in place, and disposal of excess materials.

    The contract unit price for Underdrain Inspection Box, EA. shall be for the number completed and accepted.

DESIGN NOTES

1. The type of underdrain should be selected to meet design water removal rate and soil conditions. Caution is prescribed in the use of these typical sections since special designs may be required to satisfy project conditions.

2. Type I underdrain is intended for minimum water removal conditions.

3. Type II underdrain is intended for moderate water removal conditions. Where reactive conditions may create chemical clogging, the use of an inert material and/or elimination of the filter fabric may be necessary.

4. Type III underdrain is intended for maximum water removal conditions. Filter fabric is required between the coarse aggregate or fine aggregate including those described in general notes 2 and 3. Design note 3 applies for reactive conditions.

5. Type V underdrain is intended for use in detention basins and other locations which require a filtration system. The standard fine aggregate specified for Type V underdrain conforms to filtration gradation requirements of Chapter 62-25 FAC.

6. The designer should detail in the plans, the location of:
   (a) Type V underdrain, (b) nonstandard locations of Type I, II, and III underdrain, (c) underdrain inspection boxes, (d) cleanouts for Type V underdrain, and (e) underdrain outlet pipes.

7. The designer should specify the flow line elevations at the beginning, bends, junctions and ends of underdrain pipes and outlet pipes.

8. The designer should evaluate whether an external filter fabric envelope is required around underdrain Types I and III. When required, fabric shall be specified in the plans.

6/28/2012 9:30:07 AM rd960rh C:\d\projects\standards\roadway\00200-s\00286-01.dgn

LAST REVISION	REVISION	DESCRIPTION:	FDOT DESIGN STANDARDS 2013	UNDERDRAIN	INDEX NO.	SHEET NO.
07/01/07					286	1

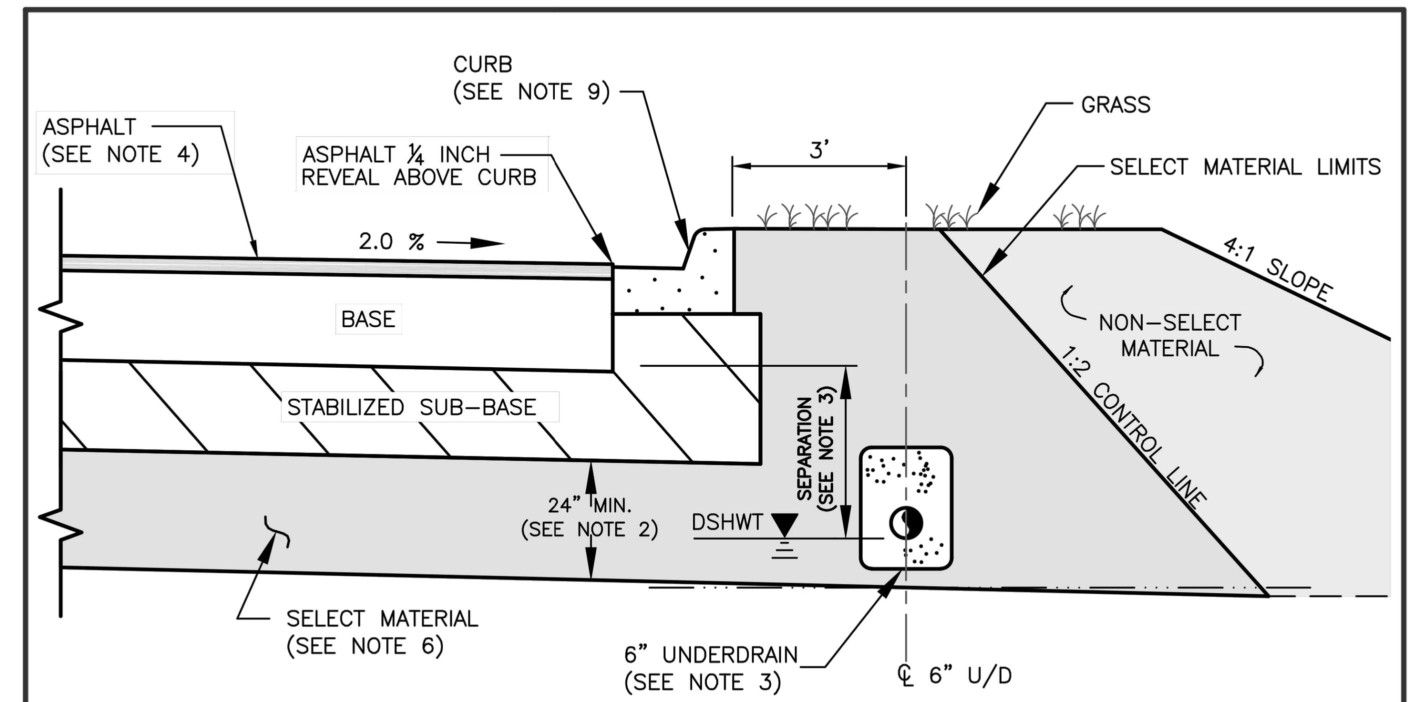

SECTIONAL VIEW
NTS

NOTES:

1. THE MINIMUM VERTICAL SEPARATION BETWEEN THE DESIGN SEASONAL HIGH WATER TABLE (DSHWT) AND THE BOTTOM OF THE BASE AT THE LOWEST EDGE OF PAVEMENT SHALL BE AS FOLLOWS:
   A. LIMEROCK BASE 24 INCH
   B. SOIL CEMENT BASE 12 INCH
   C. CRUSHED CONCRETE BASE (IF APPROVED) 12 INCH
   D. ASPHALT BASE COURSE (ABC) 12 INCH
2. A MINIMUM TWO (2) FEET OF SELECT MATERIAL CONSISTING OF A–1, A–3 OR A–2–4 WITH A MAXIMUM 15% PASSING THE #200 SIEVE BELOW THE STABILIZED SUB–BASE.
3. IF THE VERTICAL SEPARATION BETWEEN DSHWT AND BOTTOM OF BASE IS LESS THAN 2 FEET, UNDERDRAINS SHALL BE CONSTRUCTED ALONG BOTH SIDES OF THE ROAD. IF 2–3 FEET, UNDERDRAINS SHALL BE CONSTRUCTED ALONG ONE SIDE. THE INVERT OF A SIX (6) INCH UNDERDRAIN SHALL BE TWO (2) FEET MINIMUM BELOW THE BOTTOM OF THE BASE.
4. TYPE 2 THRU TYPE 5 ROADWAYS SHALL CONTAIN A MINIMUM OF 1.5 INCH OF SP ASPHALTIC CONCRETE. COLLECTOR ROADWAYS SHALL HAVE A MINIMUM OF THREE (3) INCHES OF SP ASPHALTIC CONCRETE. TYPE 1 ROADWAYS MAY BE COMPLETED IN STAGES, INITIALLY 2.25 INCHES OF SP 12.5 (S–1) ASPHALT COURSE WITH REQUIRED PAVEMENT MARKINGS AND 0.75 INCHES OF SP 9.5 (S–3) COURSE INSTALLED WITH ANY THERMOPLASTIC STRIPES, PRIOR TO RELEASE OF THE ASSURANCE FOR MAINTENANCE.
5. THE ROAD DESIGN DRAWINGS SHALL CONTAIN SOIL BORING LOCATIONS WITH EXISTING SOIL DATA, OBSERVED WATER LEVEL AND DSHWT SURFACE. UNDERDRAIN OUTFALL POND DATA AND PROXIMATE WETLAND HYDRO PERIOD ELEVATIONS SHALL ALSO BE IDENTIFIED.
6. SELECT MATERIAL SHALL BE PLACED PER FDOT INDEX DRAWINGS 500 & 505.
7. THE REQUIRED MINIMUM STRUCTURAL NUMBER (SN) SHALL BE;
   2.34 MIN. TYPE 2 ROADWAY
   3.50 MIN. TYPE I ROADWAYS
   3.70 MIN. COUNTY COLLECTOR
   4.00 MIN. COUNTY ARTERIAL
8. SOIL CEMENT BASE SHALL NOT BE CONSTRUCTED OVER STABILIZED SUBGRADE EXCEEDING LBR 20. THE COUNTY ASSIGNED LAYER COEFFICIENT FOR A MAXIMUM 12 INCH DEPTH, LBR 20 SHALL BE 0.04 PER INCH.
9. CURB DESIGN IS SITE SPECIFIC AND SHALL BE IDENTIFIED ON PLANS.

NOTE:
NO DEVIATIONS TO THIS DETAIL WILL BE PERMITTED UNLESS APPROVED BY THE COUNTY ENGINEER.
ANY PROPOSED ALTERATIONS SHALL BE CLEARLY IDENTIFIED AND HIGHLIGHTED ON DETAIL.

PASCO COUNTY ENGINEERING SERVICES DESIGN STANDARDS	ROADWAY DESIGN CRITERIA	Sheet No. 1 of 1
APPROVED BY JCW	BCC APPROVAL ____ REVISED ____	Index No. 100

C:\Standards\Final\100_Road_Design-Criteria.dwg 09/09/08

REVISIONS

NO.	DATE	DESCRIPTION	BY
1.	02-02-15	Revisions Per County Comments	ELR
2.	03-03-15	SWFWMD Resubmittal	ELR
3.	03-08-15	Access connection and Sidewalk	JAC
4.	08-07-15	County Resubmittal	ELR
5.	09-22-15	County Resubmittal - Address Comments Mod 1	ELR
6.			
7.			
8.			
9.			

Engineering ~ Planning
Environmental Science
4260 West Linebaugh Avenue
Tampa, Florida 33624
Phone: 813.265.3130 Fax: 813.265.6610
www.wraengineering.com CA 00007652

DRAWING: DRAINAGE DETAILS
DESIGNED: JAC DRAWN: ELR APPROVED: JAC

PROJECT: CYPRESS CREEK TOWN CENTER NORTH
JOB #: 0967 DATUM: NGVD 1929

JOSEPH A. CIMINO
FL P.E. # 67540

Original Date: 07-14-14
Sheet
C-307

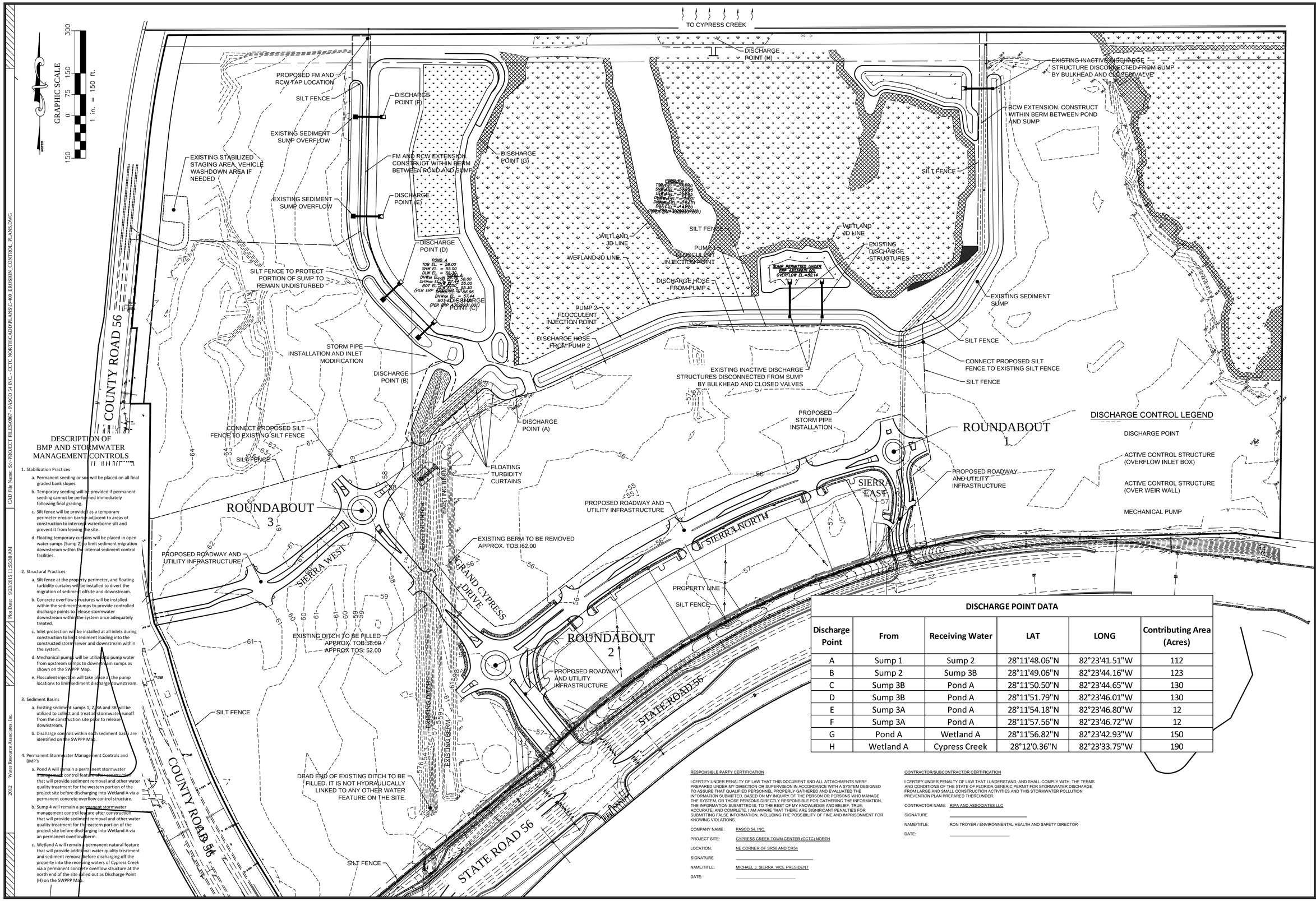

DESCRIPTION OF BMP AND STORMWATER MANAGEMENT CONTROLS

1. Stabilization Practices
   a. Permanent seeding or sod will be placed on all final graded bank slopes.
   b. Temporary seeding will be provided if permanent seeding cannot be performed immediately following final grading.
   c. Silt fence will be provided as a temporary perimeter erosion barrier adjacent to areas of construction to intercept waterborne silt and prevent it from leaving the site.
   d. Floating temporary curtains will be placed in open water sumps (Sump 2) to limit sediment migration downstream within the internal sediment control facilities.

2. Structural Practices
   a. Silt fence at the property perimeter, and floating turbidity curtains will be installed to divert the migration of sediment offsite and downstream.
   b. Concrete overflow structures will be installed within the sediment sumps to provide controlled discharge points to release stormwater downstream within the system once adequately treated.
   c. Inlet protection will be installed at all inlets during construction to limit sediment loading into the constructed stormsewer and downstream within the system.
   d. Mechanical pumps will be utilized to pump water from upstream sumps to downstream sumps as shown on the SWPPP Map.
   e. Flocculent injection will take place at the pump locations to limit sediment discharge downstream.

3. Sediment Basins
   a. Existing sediment sumps 1, 2, 3A and 3B will be utilized to collect and treat all stormwater runoff from the construction site prior to release downstream.
   b. Discharge controls within each sediment basin are identified on the SWPPP Map.

4. Permanent Stormwater Management Controls and BMP's
   a. Pond A will remain a permanent stormwater management control feature after construction that will provide sediment removal and other water quality treatment for the western portion of the project site before discharging into Wetland A via a permanent concrete overflow control structure.
   b. Sump 4 will remain a permanent stormwater management control feature after construction that will provide sediment removal and other water quality treatment for the eastern portion of the project site before discharging into Wetland A via an permanent overflow berm.
   c. Wetland A will remain a permanent natural feature that will provide additional water quality treatment and sediment removal before discharging off the property into the receiving waters of Cypress Creek via a permanent concrete overflow structure at the north end of the site called out as Discharge Point (H) on the SWPPP Map.

DISCHARGE POINT DATA

Discharge Point	From	Receiving Water	LAT	LONG	Contributing Area (Acres)
A	Sump 1	Sump 2	28°11'48.06"N	82°23'41.51"W	112
B	Sump 2	Sump 3B	28°11'49.06"N	82°23'44.16"W	123
C	Sump 3B	Pond A	28°11'50.50"N	82°23'44.65"W	130
D	Sump 3B	Pond A	28°11'51.79"N	82°23'46.01"W	130
E	Sump 3A	Pond A	28°11'54.18"N	82°23'46.80"W	12
F	Sump 3A	Pond A	28°11'57.56"N	82°23'46.72"W	12
G	Pond A	Wetland A	28°11'56.82"N	82°23'42.93"W	150
H	Wetland A	Cypress Creek	28°12'0.36"N	82°23'33.75"W	190

RESPONSIBLE PARTY CERTIFICATION

I CERTIFY UNDER PENALTY OF LAW THAT THIS DOCUMENT AND ALL ATTACHMENTS WERE PREPARED UNDER MY DIRECTION OR SUPERVISION IN ACCORDANCE WITH A SYSTEM DESIGNED TO ASSURE THAT QUALIFIED PERSONNEL PROPERLY GATHERED AND EVALUATED THE INFORMATION SUBMITTED. BASED ON MY INQUIRY OF THE PERSON OR PERSONS WHO MANAGE THE SYSTEM, OR THOSE PERSONS DIRECTLY RESPONSIBLE FOR GATHERING THE INFORMATION, THE INFORMATION SUBMITTED IS, TO THE BEST OF MY KNOWLEDGE AND BELIEF, TRUE, ACCURATE, AND COMPLETE. I AM AWARE THAT THERE ARE SIGNIFICANT PENALTIES FOR SUBMITTING FALSE INFORMATION, INCLUDING THE POSSIBILITY OF FINE AND IMPRISONMENT FOR KNOWING VIOLATIONS.

COMPANY NAME : PASCO 54, INC.

PROJECT SITE: CYPRESS CREEK TOWN CENTER (CCTC) NORTH

LOCATION: NE CORNER OF SR56 AND CR54

SIGNATURE _____

NAME/TITLE: MICHAEL J. SIERRA, VICE PRESIDENT

DATE: _____

CONTRACTOR/SUBCONTRACTOR CERTIFICATION

I CERTIFY UNDER PENALTY OF LAW THAT I UNDERSTAND, AND SHALL COMPLY WITH, THE TERMS AND CONDITIONS OF THE STATE OF FLORIDA GENERIC PERMIT FOR STORMWATER DISCHARGE FROM LARGE AND SMALL CONSTRUCTION ACTIVITIES AND THIS STORMWATER POLLUTION PREVENTION PLAN PREPARED THEREUNDER.

CONTRACTOR NAME: RIPA AND ASSOCIATES LLC

SIGNATURE _____

NAME/TITLE: RON TROYER / ENVIRONMENTAL HEALTH AND SAFETY DIRECTOR

DATE: _____

REVISIONS

NO.	DATE	DESCRIPTION	BY
1.	12/02/14	Revisions per FDEP Comments	JAC
2.			
3.			
4.			
5.			
6.			
7.			

Engineering ~ Planning
Environmental Science
4260 West Linebaugh Avenue
Tampa, Florida 33624
Phone: 813.265.3130 Fax: 813.265.6610
www.wraengineering.com CA 00007652

DRAWING: FDEP SWPPP MAP

DESIGNED: JAC DRAWN: ELR APPROVED: JAC

PROJECT: CYPRESS CREEK TOWN CENTER NORTH

JOB #: 0967 DATUM: NGVD 1929

JOSEPH A. CIMINO
FL P.E. # 67540

Original Date: 07-14-14

Sheet

C-400

CAD File Name: S:\~PROJECT FILES\0967 - PASCO 54 INC. - CCTC NORTH\CADD\PLANS\C-400_EROSION_CONTROL_PLANS.DWG
Plot Date: 9/23/2015 11:55:30 AM
2012 Water Resource Associates, Inc.

EROSION AND SEDIMENTATION

PRIOR TO ANY CONSTRUCTION ACTIVITY THE CONTRACTOR SHALL INSTALL EROSION AND SEDIMENTATION CONTROL MEASURES SHOWN ON THE PLANS AND PROVIDED FOR IN FDOT INDEX NO. 102. AS CONSTRUCTION PROGRESSES, THE CONTRACTOR SHALL PERIODICALLY CHECK THE SEDIMENTATION CONTROLS AND REPAIR THEM AS NECESSARY TO KEEP THEM IN GOOD FUNCTIONING ORDER. THE CONTRACTOR SHALL ALSO PROTECT INLETS AND OTHER SITE APPURTENANCES FROM SEDIMENTATION USING PROTECTION AS DETAILED IN FDOT INDEX NO. 102.

THE CONTRACTOR SHALL CONDUCT GROUND STABILIZING MEASURES (PAVING, GRASSING, MULCHING AND SODDING) AS SOON AS PRACTICABLE FOLLOWING FINAL GRADING OF THE SITE.

FOLLOWING COMPLETION OF CONSTRUCTION AND COMPLETED STABILIZATION OF POTENTIAL EROSION AREAS, THE CONTRACTOR SHALL REMOVE SEDIMENTATION CONTROL MEASURES AND CLEAN AND REPAIR ANY AREAS AFFECTED BY THE CONSTRUCTION ACTIVITIES.

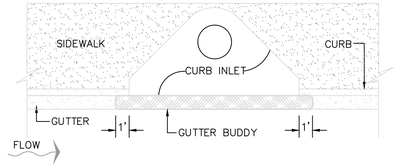

CURB INLET PROTECTION DETAIL (1)

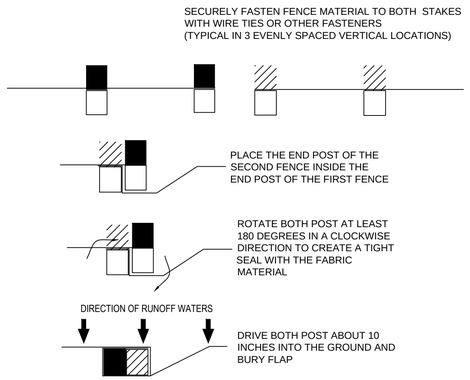

ATTACHING TWO SILT FENCES (2)

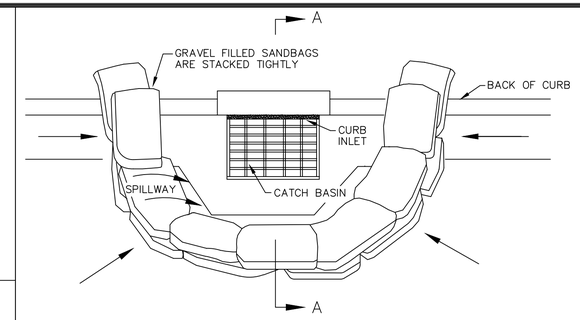

PLAN VIEW

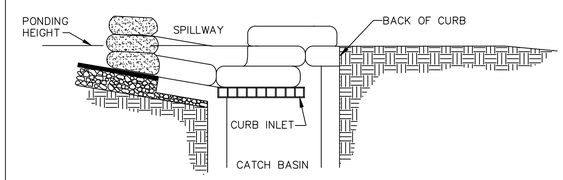

SECTION A–A

NOTES:

1. PLACE CURB TYPE SEDIMENT BARRIERS ON GENTLY SLOPING STREET SEGMENTS WHERE WATER CAN POND AND ALLOW SEDIMENT TO SEPARATE FROM RUNOFF
2. SANDBAGS OF EITHER BURLAP OR WOVEN GEOTEXTILE FABRIC, ARE FILLED WITH GRAVEL, LAYERED AND PACKED TIGHTLY
3. LEAVE ONE SANDBAG GAP IN THE TOP ROW TO PROVIDE A SPILLWAY FOR OVERFLOW
4. INSPECT BARRIERS AND REMOVE SEDIMENT AS NECESSARY. SEDIMENT AND GRAVEL MUST BE REMOVED FROM THE TRAVELED WAY IMMEDIATELY

CURB INLET PROTECTION DETAIL (3)

CONTROL NOTES

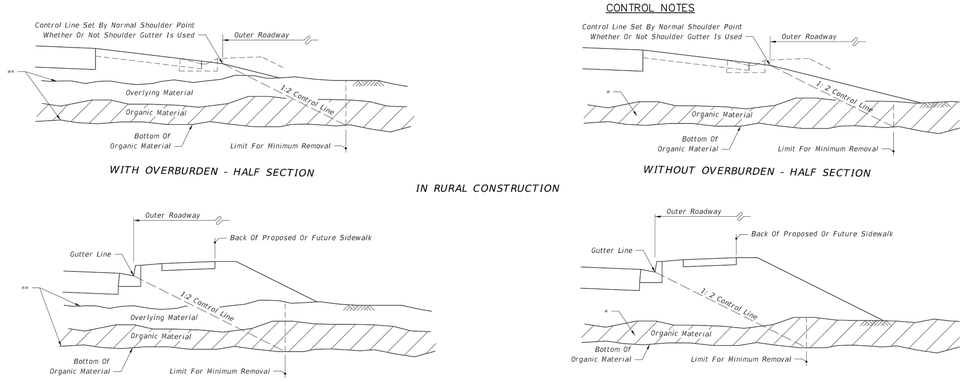

** Remove Overlying Material And Organic Material Within The Limits Shown And Backfill In Accordance With Index No. 505, Unless Otherwise Called For In The Plans Or Directed Otherwise By The District Geotechnical Engineer; The Limits Include Full Median Width When Applied To Divided Facilities With Median Widths Up To 64'; When Median Width Is Greater Than 64' And For Bifurcated Roadways The Organic Material Removal Limits Will Be Set By A 1:2 Control Line Complimentary To The Outer Roadway That Will Accommodate One Future Median Lane On Each Roadway Unless Specified Otherwise By The Plans.

* Remove Organic Material Within The Limits Shown And Backfill In Accordance With Index No. 505, Unless Otherwise Called For In The Plans Or Directed Otherwise By The District Geotechnical Engineer; The Limits Include Full Median Width When Applied To Divided Facilities With Median Widths Up To 64'; When Median Width Is Greater Than 64' And For Bifurcated Roadways The Organic Material Removal Limits Will Be Set By A 1:2 Control Line Complimentary To The Outer Roadway That Will Accommodate One Future Median Lane On Each Roadway Unless Specified Otherwise By The Plans.

REMOVAL OF ORGANIC MATERIAL

GENERAL NOTES

1. All details shown on this index for removal of organic and plastic materials apply unless otherwise shown on the plans.
2. Utilization of excavated materials shall be in accordance with Index No. 505.
3. Where organic or plastic material is undercut, backfill shall be made of suitable material in accordance with Index No. 505, unless otherwise shown on the plans.
4. The term "Plastic Material" used in this index in conjunction with removal of plastic soil is as defined under soil classifications for Plastic (P) and High Plastic (H) on Index No. 505.
5. The term "Organic Material" as used on this index is defined as any soil which has an average organic content greater than five (5.0) percent, or an individual organic content test result which exceeds seven (7.0) percent. Organic material shall be removed as shown on this index and the plans unless directed otherwise by the District Geotechnical Engineer. Average organic content shall be determined from the test results from a minimum of three randomly selected samples from each stratum. Tests shall be performed in accordance with AASHTO T 267 on the portion of a sample passing the No. 4 sieve.
6. The normal depth of side ditches shall be 3.5' below the shoulder point except in special cases.
7. In municipal areas, where underdrain is to be constructed beneath the proposed pavement, the grade of the underdrain filter material will not extend above the bottom of the stabilized section of the subgrade. Gradation of the filter material shall conform to FDOT specifications. Minimum grade on underdrain pipe shall be 0.2%.
8. See Index No. 506 for miscellaneous earthwork details.

DESIGN NOTES

1. At locations where organic material or other soft soil deposits persists to such depth that removal is impractical, the construction of a geosynthetic foundation over those soils should be considered. The Engineer of Record should request guidance from the District Geotechnical Engineer and make a geosynthetic foundation design in accordance with Index No. 501 when pursuing geosynthetic alternates.
2. The designer shall take into consideration the expectancy of roadway widening to the outside, and where widening is anticipated specify in the plans the limits of removal of organic and plastic materials necessary to accommodate anticipated widening.

LAST REVISION	REVISION	DESCRIPTION:			INDEX NO.	SHEET NO.
02			FDOT DESIGN STANDARDS FY 2012/2013	REMOVAL OF ORGANIC AND PLASTIC MATERIAL	500	1

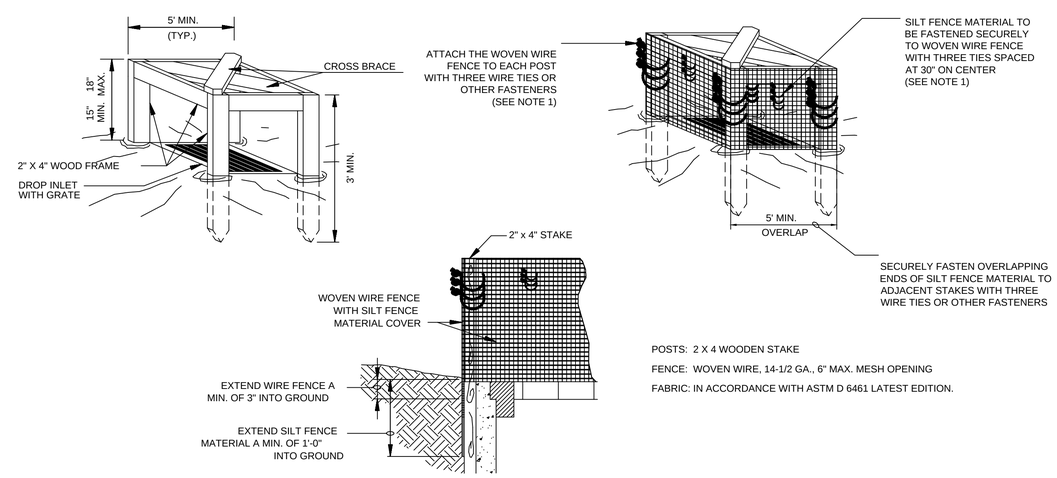

POSTS: 2 X 4 WOODEN STAKE

FENCE: WOVEN WIRE, 14-1/2 GA., 6" MAX. MESH OPENING

FABRIC: IN ACCORDANCE WITH ASTM D 6461 LATEST EDITION.

1. ATTACH THE WOVEN WIRE FENCE TO EACH POST AND THE GEOTEXTILE TO THE WOVEN WIRE FENCE (SPACED EVERY 30") WITH THREE WIRE TIES OR OTHER FASTENERS, ALL SPACED WITHIN THE TOP 8" OF THE FABRIC. ATTACH EACH TIE DIAGONALLY 45 DEGREES THROUGH THE FABRIC, WITH EACH PUNCTURE AT LEAST 1" VERTICALLY APART.
2. WHEN TWO SECTIONS OF SILT FENCE MATERIAL ADJOIN EACH OTHER, THEY SHALL BE OVERLAPPED ACROSS TWO POSTS.
3. MAINTENANCE SHALL BE PERFORMED AS NOTED IN THE SWPPP. DEPTH OF ACCUMULATED SEDIMENTS MAY NOT EXCEED ONE-HALF THE HEIGHT OF THE FABRIC. MAINTENANCE CLEANOUT MUST BE CONDUCTED REGULARLY TO PREVENT ACCUMULATED SEDIMENTS FROM REACHING ONE-HALF THE HEIGHT OF THE SILT FENCE MATERIAL ABOVE GRADE.
4. ALL SILT FENCE INLETS SHALL INCLUDE WIRE SUPPORT.

SILT FENCE INLET PROTECTION (4)

N.T.S.

REVISIONS

NO.	DATE	DESCRIPTION	BY
1.	02-02-15	Revisions Per County Comments	ELR
2.	03-03-15	SWFWMD Resubmittal	ELR
3.	06-04-15	Access Ramp and Sidewalk	JAC
4.	08-07-15	County Resubmittal	ELR
5.	09-22-15	County Resubmittal - Address Comments Mod 1	ELR
6.			
7.			
8.			
9.			

Engineering ~ Planning
Environmental Science
4260 West Linebaugh Avenue
Tampa, Florida 33624
Phone: 813.265.3130 Fax: 813.265.6610
www.wraengineering.com CA 00007652

DRAWING: EROSION CONTROL DETAILS

DESIGNED: JAC DRAWN: ELR APPROVED: JAC

PROJECT: CYPRESS CREEK TOWN CENTER NORTH

JOB #: 0967 DATUM: NGVD 1929

JOSEPH A. CIMINO
FL P.E. # 67540

Original Date: 07-14-14

Sheet

C-401

2012 Water Resource Associates, Inc. Plot Date: 9/23/2015 11:55:41 AM CAD File Name: S:\~PROJECT FILES\0967 - PASCO 54 INC. - CCTC NORTH\CADD\PLANS\C-401_EROSION_CONTROL_DETAILS.DWG

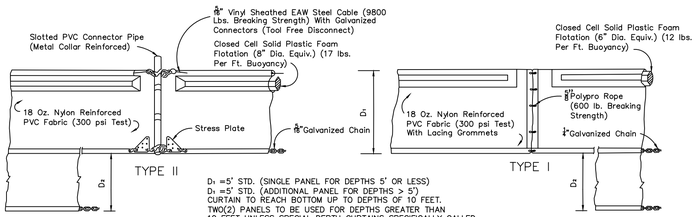

D_1 =5' STD. (SINGLE PANEL FOR DEPTHS 5' OR LESS)
D_1 =5' STD. (ADDITIONAL PANEL FOR DEPTHS > 5')
CURTAIN TO REACH BOTTOM UP TO DEPTHS OF 10 FEET.
TWO(2) PANELS TO BE USED FOR DEPTHS GREATER THAN 10 FEET UNLESS SPECIAL DEPTH CURTAINS SPECIFICALLY CALLED FOR IN THE PLANS OR AS DETERMINED BY THE ENGINEER.

NOTICE: COMPONENTS OF TYPES I AND II MAY BE SIMILAR OR IDENTICAL TO PROPRIETARY DESIGNS. ANY INFRINGEMENT ON THE PROPRIETARY RIGHTS OF THE DESIGNER SHALL BE THE SOLE RESPONSIBILITY OF THE USER. SUBSTITUTIONS FOR TYPES I AND II SHALL BE AS APPROVED BY THE ENGINEER.

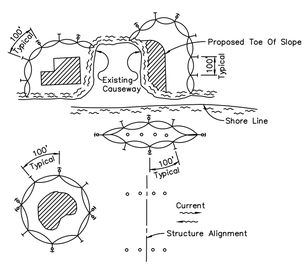

LEGEND

- Pile Locations
- Dredge Or Fill Area
- Mooring Buoy w/Anchor
- Anchor
- Barrier Movement Due To Current Action

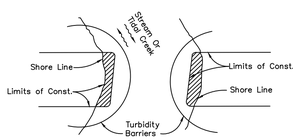

Note:
Turbidity barriers for flowing streams and tidal creeks may be either floating, or staked types or any combination of types that will suit site conditions and meet erosion control and water quality requirements. The barrier type(s) will be at the Contractors option unless otherwise specified in the plans, however payment will be under the pay item(s) established in the plans for Floating Turbidity Barrier and/or Staked Turbidity Barrier. Posts in staked turbidity barriers to be installed in vertical position unless otherwise directed by the Engineer.

NOTES:
1. Turbidity barriers are to be used in all permanent bodies of water regardless of water depth.
2. Number and spacing of anchors dependent on current velocities.
3. Deployment of barrier around pile locations may vary to accommodate construction operations.
4. Navigation may require segmenting barrier during construction operations.
5. For additional information see Section 104 of the Standard Specifications.

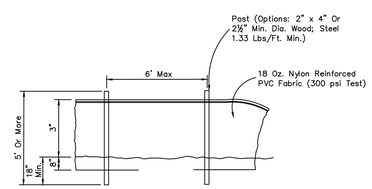

STAKED TURBIDITY BARRIER

GENERAL NOTES

1. Floating turbidity barriers are to be paid for under the contract unit price for Floating Turbidity Barrier, LF.
2. Staked turbidity barriers are to be paid for under the contract unit price for Floating Turbidity Barrier, LF.

TURBIDITY BARRIER (FDOT INDEX 103) 3

N.T.S.

NOTES:
1. PROVIDE SEDIMENT TRAP ON DOWN GRADIENT SIDE (OR BOTH SIDES) AS REQUIRED.
2. FLUSH SURFACE STONE TOWARD SEDIMENT TRAP WITH HIGH VOLUME WATER FLOW AS NEEDED TO MAINTAIN CLEAN SURFACE STONE.
3. SEDIMENT TRAP SHALL BE LOCATED OUTSIDE OF THE RIGHT-OF-WAY AND AT A MINIMUM SETBACK DISTANCE AS REQUIRED PER LOCAL JURISDICTION.
4. SEE SWPPP SITE MAPS FOR LOCATION OF SEDIMENT TRAP(S).
5. CONTRACTOR TO LOCATE TEMPORARY CONSTRUCTION FENCING, JERSEY BARRIERS, OR BOTH ALONG THE SIDES OF THE CONSTRUCTION EXIT TO PREVENT CONSTRUCTION TRAFFIC FROM SHORT CIRCUITING/BYPASSING THE EXIT.

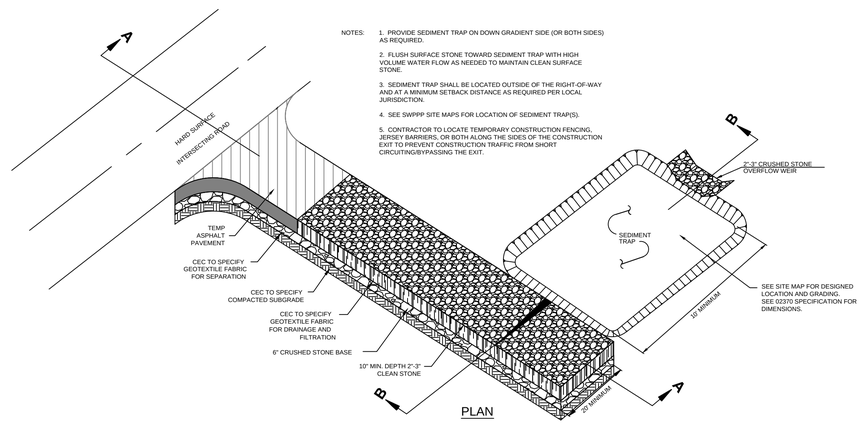

PLAN

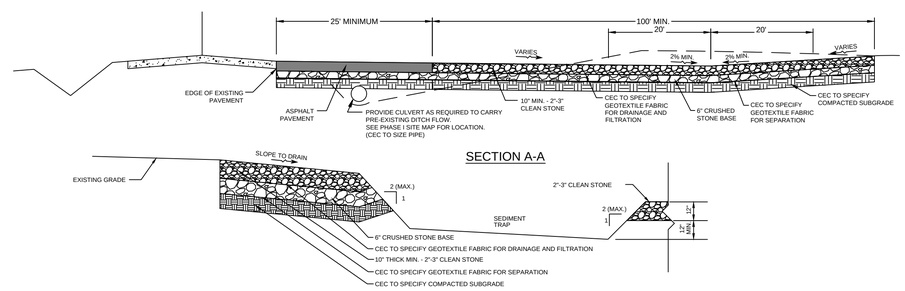

SECTION A-A

SECTION B-B

CONSTRUCTION ACCESS 1

N.T.S.

REVISIONS

NO.	DATE	DESCRIPTION	BY
1.	02-02-15	Revisions Per County Comments	ELR
2.	03-03-15	SWFWMD Resubmittal	ELR
3.	06-04-15	Access connection and Sidewalk	JAC
4.	08-07-15	County Resubmittal	ELR
5.	09-22-15	County Resubmittal - Address Comments Mod 1	ELR
6.			
7.			
8.			
9.			

Engineering ~ Planning
Environmental Science
4260 West Linebaugh Avenue
Tampa, Florida 33624
Phone: 813.265.3130 Fax: 813.265.6610
www.wraengineering.com CA 00007652

DRAWING
EROSION CONTROL DETAILS
DESIGNED: JAC DRAWN: ELR APPROVED: JAC

PROJECT
CYPRESS CREEK TOWN CENTER NORTH
JOB #: 0967 DATUM: NGVD 1929

JOSEPH A. CIMINO
FL P.E. # 67540

Original Date: 07-14-14
Sheet
C-402

CAD File Name: S:\-PROJECT FILES\0967 - PASCO 54 INC. - CCTC NORTH\CADD\PLANS\C-404_EROSION_CONTROL_DETAILS.DWG
Plot Date: 9/22/2015 11:55:44 AM
2012 Water Resource Associates, Inc.

STORM WATER POLLUTION PREVENTION PLAN

The following notes constitute a Storm Water Pollution Prevention Plan (SWPPP) in accordance with the Florida Department of Environmental Protection's (FDEP) "National Pollutant Discharge Elimination System" (NPDES) Generic Permit for Stormwater Discharge from Large and Small Construction Activities.

The following entities are identified as team members of "SWPPP": Water Resource Associates, the Developer, and the site contractor and his sub-contractors. Each team member has specific responsibilities and obligations. In general, all team members, with regard to their involvement and responsibilities on the project, are to implement all necessary storm water management controls to assure compliance with the NPDES Generic Permit for Storm Water Discharges from Construction Activities, the Southwest Florida Water Management District Permit, the applicable local governing agency (i.e. Pasco County) and the guidelines listed in the SWPPP. The duties and responsibilities of the team members as they pertain to the SWPPP are as follows.

Water Resource Associates, Inc.

A. Develop SWPPP including, but not limited to, retention/detention ponds, control structures, erosion control methods and locations and stabilization criteria. This design is included within these construction plans and the following notes and instructions.

B. Submit and obtain the necessary design related storm water permits from the Florida Department of Environmental Protection, the Southwest Florida Water Management District and other applicable govermental bodies.

C. Upon notification by the developer of his intent to commence construction, submit a Notice of Intent to the FDEP on behalf of the developer and copy the contractor including SWPPP certification and copy of the permit.

D. Submit to SWFWMD and the operator of the municipal separate storm water system, if applicable, a letter of construction commencement.

E. Complete and submit a Notice of Termination and certification for developer.
The NOT's shall be submitted no more than 30 days after
(a) completion of the project and final stabilization of the site or
(b) when responsibility for the site has ended. Final stabilization as defined by EPA is when all soil disturbing activities at the site have been completed and a uniform (e.g. evenly distributed, without large bare areas) perennial vegetative cover with a density of 70% of the native background vegetative cover for the area has been established on all unpaved areas and areas not covered by permanent structures. As an alternative, equivalent permanent stabilization measures (such as riprap, gabions, or geotextiles) may be employed. The client shall notify Water Resource Associates when one of these criteria has been met.

Contractor

A. RIPA AND ASSOCIATES LLC is the designated SWPPP contractor for these construction activities. See SWPPP Map for applicable certifications A copy of this SWPPP and certification shall be maintained onsite throughout the duration of construction.

B. During construction, assure compliance with the designed Storm Water Pollution Prevention Plans prepared by Water Resource Associates and the NPDES Generic Permit for Storm Water Discharges from Large and Small Construction Activities.

C. Maintain a copy of the construction plans, which include the Storm Water Pollution Prevention Plan, the NOT, and all inspections reports and certifications on site.

D. Undertake all reasonable Best Management Practices (BMP's) to assure that sited or otherwise polluted storm water is not allowed to discharge from the site during all phases of construction. Stabilization BMP's that may be used include: straw bale dikes, silt fences, earth dikes, brush barriers, drainage swales, check dams, subsurface drain, pipe slope drain, level spreaders, storm drain inlet protection, outlet protection, sediment traps, and temporary sediment basins. Detention ponds may also be used as temporary sediment basins. Additional BMP's that may need to be implemented include: providing protected storage areas for chemicals, paints, solvents, fertilizers, and other potentially toxic materials. Providing waste receptacles at convenient locations and providing regular collection of wastes, including building material wastes. Minimizing off-site tracking of sediments. Making adequate preparations, including training and equipment to contain spills of oil and hazardous materials. Complying with applicable state or local waste disposal, sanitary sewer or septic system regulations and the use of appropriate pollution prevention measures for allowable non-storm water components of discharge.

E. Notify Water Resource Associates and the developer in writing of any non-storm water pollution sources which are being stored, or otherwise used during the construction of the project, i.e., fertilizers, fuels, pesticides, other chemicals. The notification should be accompanied with the contractor's design and methods to prevent pollution run-off from these sources.

F. Develop a maintenance and inspection plan which includes, but is not limited to the following:

A. The specific areas to be inspected and maintained that includes all the disturbed areas and material storage areas of the site.
B. The erosion and sediment controls identified in the SWPPP to be maintained and inspected and those additional controls that the contractor deems necessary.
C. Maintenance procedures.
D. The procedure to follow if additional work is required or whom to call.
E. Inspections and maintenance forms.
F. The personnel assigned to each task.

The following shall be inspected a minimum of once a week or within 24 hours after 0.50 inches of rainfall:

Stabilization measures (once a month if fully stabilized).
Structural controls.
Discharge points.
Construction entrances and exits.
Areas used for storage of exposed materials.

An inspection form shall be completed for each inspection. Any permit violations should be noted and corrective measures shall be conducted as soon as practicable before the next anticipated storm event to ensure all facilities remain in good and effective operating condition, and no later than 7 days after the inspection occurred. If revisions to the SWPPP are needed, a report form for changes in the SWPPP shall be completed and a copy sent to Water Resource Associates. The original shall be kept on-site as documentation of the change. If the inspection passes, a certification that the facility is in compliance with the SWPPP and the NPDES permit must be signed by a duly authorized representative of the principal executive official of the operator of the SWPPP with one of the following qualifications:

1. Has successfully completed the Florida Stormwater, Erosion and Sediment Control Inspector Training Program.
2. Successfully completed a similar training program.
3. Has enough practical on the job training to be qualified to perform the inspections.

Retain inspection reports and certifications for at least three years.

G. Site stabilization measures shall be initiated as soon as practical but in no case more than 7 days, in portions of the site where construction activities have temporarily or permanently ceased.

H. Releases in Excess of Reportable Quantities.

1. The discharge of hazardous substances or oil in the stormwater discharge(s) from a facility or activity shall be prevented or minimized in accordance with the applicable stormwater pollution prevention plan for the facility or activity. This permit does not relieve the operator of the reporting requirements of 40 CFR part 117 and 40 CFR part 302. Where a release containing a hazardous substance in amount equal to or in excess of a reporting quantity established under either 40 CFR 117 or 40 CFR 302, occurs during a 24 hour period:

a. The operator is required to notify the State Warning Point (800-210-0519 or 850-413-9911) as soon as he or she has knowledge of the discharge;

b. The operator shall submit within 14 calendar days of knowledge of the release a written description of: the release (including the type and estimate of the amount of material released), the date that such release occurred, the circumstances leading to the release, and remedial steps to be taken, to the Florida Department of Environmental Protection, NPDES Stormwater Section, Mail Station 2500, 2600 Blair Stone Road, Tallahassee, Florida 32399-2400; and

c. The stormwater pollution prevention plan required under Part V of this permit must be modified within 14 calendar days of knowledge of the release: to provide a description of the release, the circumstances leading to the release, and the date of the release. In addition, the plan must be reviewed to identify measures to prevent the reoccurrence of such releases and to respond to such releases, and the plan must be modified where appropriate.

2. This permit does not authorize the discharge of hazardous substances or oil resulting from an on-site spill.

Developer

A. Notify WRA of your intent to commence construction. Sign the Notice of Intent form as operator of the storm water discharge facility and permittee and return to Water Resource Associates, Inc.

B. Sign a Certification of Storm Water Pollution Prevention Plan and return it to Water Resource Associates, Inc.

C. Notify WRA when it is time to submit a Notice of Termination as defined under Part E of the Water Resource Associates section of the SWPPP. Sign and return to Water Resource Associates, Inc. for submittal to FDEP a Notice of Termination form and certification.

PRE-DEVELOPED SITE INFORMATION:

1. Total site acreage: 93 ac. +/-
2. Land use: Vacant Pasture
3. Vegetation: Native grasses and other ground cover
4. Receiving waters or municipal separate storm water system: Master stormwater system that discharges to Cypress Creek
5. 25 Year/24 Hour rainfall depth: 8.5"
6. Soil types: FINE SANDS, DEPRESSIONAL MUCK AND CLEAN FILL

PROJECT INFORMATION:

1. Project type: Roadway, sidewalk and utility infrastructure
2. Anticipated construction sequence is as follows:
   1. Complete erosion control installation
   2. Clearing and grubbing
   3. Earthwork activities
   4. Storm water system construction
   5. Utility construction
   6. Base and pavement construction
   7. Final stabilization

   The BMP's listed in Part D of the Contractor section of the SWPPP shall be considered during all phases of construction.
3. Anticipated start date: MAY 2014
4. Anticipated completion date: OCTOBER 2014
5. Total acres disturbed: 15 ac. +/-
6. Pre-developed "CN" number: 80
7. Post-developed "CN" number: 98 for roadway and sidewalks
8. The storm water management system, upon completion and appropriate certification and as-built submittals will be operated and maintained by: CYPRESS CREEK TOWN CENTER POA, INC.
9. The potential source of pollution from this project is on-site development and construction activity.

GENERAL EROSION AND TURBIDITY CONTROL NOTES

1. The Site Subcontractor shall be responsible for installation and maintenance of all erosion and turbidity controls and the quality and quantity of offsite or wetland discharges.
2. Prior to construction, the Site Subcontractor is responsible for having his dewatering plan and turbidity control plan approved by the applicable reviewing agencies. Refer to the project's permit approvals and permit conditions for agencies requiring such review and approval. Questions concerning appropriate techniques should be addressed to those agencies and/or discussed with the project engineer and owner.
3. The appropriate turbidity and erosion control methodologies selected by the Site Subcontractor for the this project should be made following assessment of the plans and project site specific factors and after consultations as needed with the project engineer and appropriate agencies. The Site Subcontractor will be responsible for obtaining any and all necessary permits for such activity; several factors to consider are listed below:
   A. Clay content in excavated materials and/or permeabilities rates
   B. Depth of cut in ponds, trenches, or utility lines
   C. Ambient ground water levels
   D. Actual rainfall amounts and time of year relative to normal rainy seasons
   E. Proximity to wetlands, water bodies or offsite properties
   F. 'Class' designation of receiving water bodies (i.e., Outstanding Florida Waters, shellfish harvest areas, etc.)
   G. Density, type, and proximity of upland vegetation to be retained during construction (for use as possible filtration areas)
   H. Fill height relative to natural grade and length and steepness of the proposed slopes
   I. Existing topography and directions of surface flow
   J. Type of equipment used
   K. Project type
   L. Duration of construction activities
   M. Separation distance of onsite ponds
   N. Ambient quality of surface and groundwater
   O. Temporary stockpile locations and heights
4. At the onset of construction, the Site Subcontractor, as the party responsible for implementation of the erosion and sediment control plan, shall assess the above described conditions and factors with respect to relative cost effectiveness and select the appropriate methods of protetion. A fairly extensive list of techniques are presented below but it must be stressed that any or al of the following may be necessary to maintain water quality and quantity standards. The construction sequencing should be thought out in advance of initiation to provide adequate protection of water quality.
5. Discharges which exceed 29 N.T.U.'s over the background levels are in violation of state water quality standards. Discharges of water quantities which affect offsite properties or may damage wetlands are also prohibited by regulating agencies.
6. The erosion and turbidity control measures shown hereon are the minimum required for agency approval. Additional control and measures may be required due to the Site Subcontractor's construction sequence & unforeseen weather conditions. Any additional measures deemed necessary by the Site Subcontractor shall be included in the lump sum bid with no extras for materials and labor allowed.
7. Hay bales or silt screens shall be installed prior to land clearing to protect water quality and to identify areas to be protected from clearing activities and maintained for the duration of the project until all soil is stabilized.
8. Floating turbidity barriers shall be in place in flowing systems or in open water lake edges prior to initiation of earthwork and maintained for the duration of the project until all soil is stabilized.
9. No clay material shall be left exposed in any stormwater facility. If clay or sandy-clays are encountered during stormwater storage excavation, the Site Subcontractor shall notify the Engineer immediately before proceeding with further excavation. If the Engineer of Record has determined that such soils are non-confining and must be excavated to meet permit and design conditions, excavation may proceed after obtaining written authorization from the appropriate governing agency. If said soils are left exposed at the permitted and designed depth, the Site Subcontractor shall over-excavate the pond's bottom and side slopes by a minimum of twelve (12") inches and backfill with clean sands to help prevent suspension of fine particles in the water column.
10. The installation of temporary erosion control barriers shall be coordinated with the construction of the permanent erosion control features to the extent necessary to assure effective and continuous control of erosion and water pollution throughout the life of the construction phase.
11. The type of erosion control barriers used shall be governed by the nature of the construction operation and soil type that will be exposed. Silty and clayey material may require solid sediment barriers to prevent turbid water discharge, while sandy material may need only silt screens or have bales to prevent erosion. Floating turbidity curtains should generally be used in open water situations. Diversion ditches or swales may be required to prevent turbid stormwater runoff from being discharged to wetlands or other water bodies. It may be necessary to employ a combination of barriers, ditches and other erosion/turbidity control measures if conditions warrant.
12. Where pumps are to be used to remove turbid waters from construction areas, the water shall be treated prior to discharge to the wetlands. Treatment methods include, for example, turbid water being pumped into grassed swales or appropriate upland vegetated areas (other than upland preservation areas and wetland buffers), sediment basins, or confined by an appropriate enclosure such as turbidity barriers or low berms, and kept confined until turbidity levels meet State Water Quality Standards.
13. The Permittee shall schedule his operations such that the are unprotected erodible earth exposed at any one time is not larger that the minimum area necessary for efficient construction operation, and the duration of exposed, uncompleted construction to the elements shall be as short as practicable. Clearing and grubbing shall be so scheduled and performed such that grading operations can follow immediately thereafter. Grading operations shall be so scheduled and performed that permanent erosion control features can follow immediately thereafter if conditions on the project permit.
14. Water derived from various dewatering methods should be passed through sufficiently wide areas of existing upland vegetation to filter our excess turbidity. If this is not sufficient, the water shall be retained in previously constructed permanent stormwater ponds or else retained in temporary sedimentation basins until clarity is suitable to allow for its discharge. Plugging the outfalls from completed stormwater ponds may be needed to avoid discharge. However, such situations should be monitored closely to preclude berm failure if water levels rise too high.
15. Water can be transported around the site by the use of internal swales or by pumps and pipes.
16. Sheet flow of newly filled or scraped areas may be controlled or contained by the use of brush barriers, diversion swales, interceptor ditches or low berms. Flow should be directed toward areas where sediments can sufficiently settle out.
17. Exposed soils shall be stabilized as soon as possible, especially slopes leading to wetlands. Stabilization methods include solid sod, seeding and mulching or hydromulching to provide a temporary or permanent grass cover mulch blankets, filter fabrics, etc., can be employed to provide vegetative cover.
18. Energy dissipaters (such as rip rap, a gravel bed, hay bales, etc.) shall be installed at the discharge point of pipes or swales if scouring is observed.
19. Attempt to install roadway curb and gutters as soon as possible to reduce the surface area for erosion to occur.
20. Implement storm drain inlet protection (hay bales or gravel) to limit sedimentation within the stormwater system. Perform inspections and periodic cleaning of sediments which wash out into the streets until all soil is stabilized.
21. Water discharge velocities from impounded areas and temporary sedimentation basins shall be restricted to avoid scouring in receiving areas.
22. If water clarity does not reduce to state standards rapidly enough in holding ponds, it may be possible to use chemical agents such as alum to flocculate or coagulate the sediment particles.
23. Hay bales, silt screens, or gravel beds can be added around the pipe or swale discharge points to help clarify discharges. Spreader swales may help dissipate cloudy water prior to contact with wetlands.
24. All fuel storage areas or other hazardous storage areas shall conform to accepted state or federal criteria for such containment areas.
25. Vehicle or equipment washdown areas will be sufficiently removed from wetlands or offsite areas.
26. Non-potable water shall be sprayed on all exposed earth surfaces during clearing grading, earth moving, and other site preparation activities. The exposed earth shall be watered throughout the day to minimize dust.
27. If the above controls remain ineffective in precluding release of turbid water, especially during pond or utility line dewatering, then the well points or sock drains to withdraw groundwater which may already be clear enough to allow for direct discharge to wetlands.
28. Ongoing inspections and periodic maintenance by the Site Subcontractor shall occur throughout construction as necessary to insure the above methods are working suitably. This may be needed daily, if conditions so warrant. Site Subcontractors are encouraged to obtain and thoroughly review The Florida Development Manual: A Guide to Sound Land and Water Management, which was developed by the State of Florida Department of Environmental Protection in 1988. This provides fairly in-depth discussions of recommended techniques and also provides specific design and technical standards. A copy of this document is available for review at Water Resource Associates, Inc.
29. Spoil disposal locations are to be located outside of all wetland JD lines and buffer lines shown on the plan. Spoil disposal locations must be self-contained, in that erosion control measures such as silt fence and/or hay bails must be installed and maintained around each disposal area to prevent sediment runoff beyond the limits of construction.
29. Fill stockpiles are to be located outside of all wetland JD lines and buffer lines shown on the plan. Fill stockpiles must be self-contained, in that erosion control measures such as silt fence and/or hay bails must be installed and maintained around each stockpile to prevent sediment runoff beyond the limits of construction.

Pond/Lake Excavation Note
No excavation shall extend below the permitted design depths/elevations shown on the drawings, unless additional testing supports otherwise; and no lower semi-confining unit clayey soil material and/or no limestone materials shall be excavated, regardless if these materials are encountered within the permitted excavation depths/elevations. If any lower semi-confining unit clayey soil materials or limestone materials are encountered above the permitted depths/elevations, then excavation operations shall cease in the general area and the Engineer of Record shall be notified immediately.

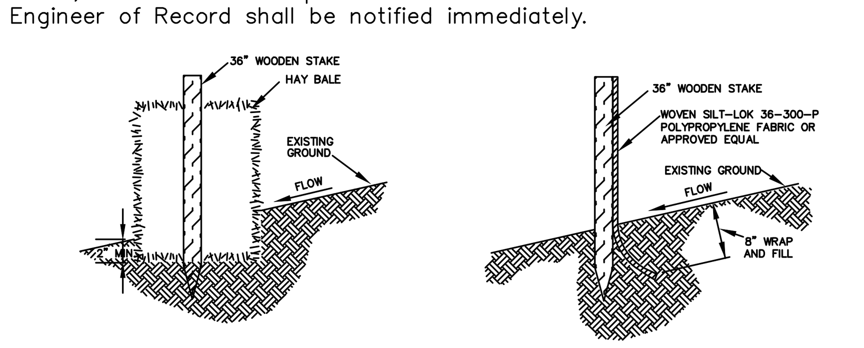

STAKED HAY BAIL

STAKED SILT FENCE

EROSION CONTROL NOTES:

1. TO PREVENT SEDIMENTARY RUNOFF DURING CONSTRUCTION, STAKED HAYBALES, STAKED SILT SCREENS OR INLET DEBRIS CONTROL SCREENS ARE TO BE PLACED AT STORM INLETS, OUTFALL LOCATIONS AND ADJACENT PROPERTY LINES AS REQUIRED PRIOR TO ANY CONSTRUCTION ACTIVITIES. THE CONTRACTOR IS RESPONSIBLE FOR MAINTAINING THE SEDIMENTATION BARRIERS IN A WORKING MANNER FOR THE DURATION OF CONSTRUCTION AND SHOULD BE CHECKED DAILY. SILTATION ACCUMULATIONS GREATER THAN THE LESSER OF 12 INCHES OR ONE-HALF OF THE DEPTH OF THE SEDIMENTATION BARRIER SHALL BE IMMEDIATELY REMOVED AND REPLACED IN UPLAND AREAS. IN ADDITION TO SPECIFIED EROSION CONTROL LOCATIONS, THE CONTRACTOR SHALL PERFORM DAILY SITE INSPECTIONS FOR POTENTIAL EROSION PROBLEMS. IF PROBLEMS OCCUR, THE CONTRACTOR IS RESPONSIBLE FOR INSTALLING APPROPRIATE EROSION CONTROL IMMEDIATELY. STORMWATER TREATMENT FACILITIES INCLUDING OUTFALL PER DETAIL ARE TO BE CONSTRUCTED EARLY IN SITE DEVELOPMENT, WITH NO OFF-SITE UNTREATED RUN-OFF OCCURRING DURING CONSTRUCTION. THE CONTRACTOR IS RESPONSIBLE FOR REMOVING TEMPORARY EROSION CONTROL DEVICES FOLLOWING COMPLETION OF ALL CONSTRUCTION AND FINAL STABILIZATION.
2. CONTRACTOR TO KEEP CONSTRUCTION ACTIVITIES AND EQUIPMENT TO A MINIMUM AT OUTFALL LOCATIONS WHICH DISCHARGE TO EXISTING JURISDICTIONAL AREAS. FLOATING OR STAKED TURBIDITY BARRIERS MAY BE USED IN LIEU OF STAKED HAYBALES/SILT SCREENS WHERE WARRANTED.
3. ALL EROSION CONTROL MEASURES SHALL BE MAINTAINED IN-PLACE UNTIL THE SITE HAS BEEN STABILIZED AND REVEGETATED.
4. CONSTRUCTION METHOD AND MATERIALS TO BE IN ACCORDANCE WITH SECTION 104-6 OF THE FLORIDA DEPARTMENT OF TRANSPORTATION STANDARD CONSTRUCTION SPECIFICATIONS.
   a) HAY BALES MUST BE BUTTED CLOSE TOGETHER AND HAVE NO GAPS TO ALLOW FLOW TO PASS THROUGH WITHOUT BEING FILTERED.
   b) JOINTS OF THE FILTER FABRIC MUST BE OVERLAPPED AND PROPERLY CONNECTED TO PREVENT ANY OPENING FROM OCCURRING.
5. SILT SCREENS MAY ALSO REPRESENT CONSTRUCTION LIMITS BARRIERS. THEY SHALL BE ERECTED PRIOR TO INITIATION OF SITE CLEARING OPERATIONS NEAR WETLANDS, BUFFER AREAS AND ANY OTHER AREAS SHOWN AS PRESERVED OR PROTECTED FROM CONSTRUCTION ACTIVITIES. FAILURE TO INSTALL AND MAINTAIN BARRIERS/SILT SCREENS SHALL BE CAUSE FOR PUNITIVE FINANCIAL PENALTIES. FINANCIAL PENALTIES (PUNITIVE AND REGULATORY), CONSULTING FEES AND ESTIMATED COST OF RESTORATION WILL BE DEDUCTED FROM SUBSEQUENT PAYMENT REQUESTS.

EROSION CONTROL DETAIL
N.T.S

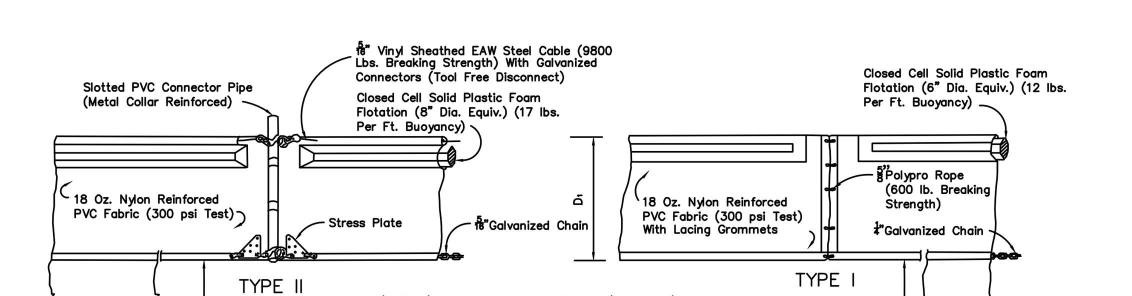

D_1 =5' STD. (SINGLE PANEL FOR DEPTHS 5' OR LESS)
D_1 =5' STD. (ADDITIONAL PANEL FOR DEPTHS > 5')
CURTAIN TO REACH BOTTOM UP TO DEPTHS OF 10 FEET.
TWO(2) PANELS TO BE USED FOR DEPTHS GREATER THAN 10 FEET UNLESS SPECIAL DEPTH CURTAINS SPECIFICALLY CALLED FOR IN THE PLANS OR AS DETERMINED BY THE ENGINEER.

NOTICE: COMPONENTS OF TYPES I AND II MAY BE SIMILAR OR IDENTICAL TO PROPRIETARY DESIGNS. ANY INFRINGEMENT ON THE PROPRIETARY RIGHTS OF THE DESIGNER SHALL BE THE SOLE RESPONSIBILITY OF THE USER. SUBSTITUTIONS FOR TYPES I AND II SHALL BE AS APPROVED BY THE ENGINEER.

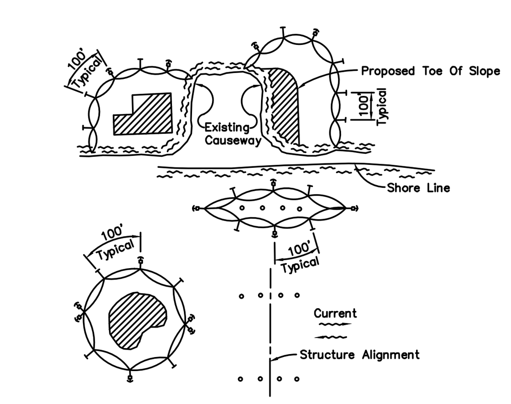

LEGEND
- Pile Locations
- Dredge Or Fill Area
- Mooring Buoy w/Anchor
- Anchor
- Barrier Movement Due To Current Action

NOTES:
Turbidity barriers are to be used in all permanent bodies of water regardless of water depth.
2. Number and spacing of anchors dependent on current velocities.
3. Deployment of barrier around pile locations may vary to accommodate construction operations.
4. Navigation may require segmenting barrier during construction operations.
5. For additional information see Section 104 of the Standard Specifications.

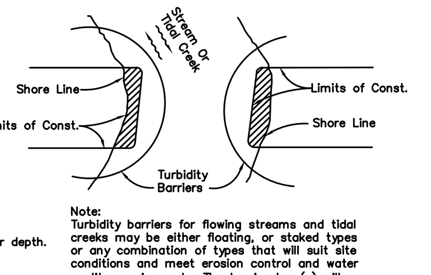

Note:
Turbidity barriers for flowing streams and tidal creeks may be either floating, or staked types or any combination of types that will suit site conditions and meet erosion control and water quality requirements. The barrier type(s) will be at the Contractors option unless otherwise specified in the plans, however payment will be under the pay item(s) established in the plans for Floating Turbidity Barrier and/or Staked Turbidity Barrier. Posts in staked turbidity barriers to be installed in vertical position unless otherwise directed by the Engineer.

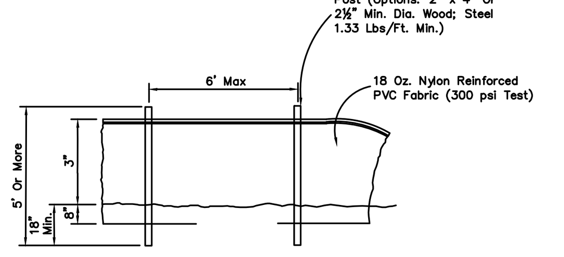

STAKED TURBIDITY BARRIER

GENERAL NOTES
1. Floating turbidity barriers are to be paid for under the contract unit price for Floating Turbidity Barrier, LF.
2. Staked turbidity barriers are to be paid for under the contract unit price for Floating Turbidity Barrier, LF.

TURBIDITY BARRIER DETAIL (FDOT INDEX 103)
N.T.S

REVISIONS

NO.	DATE	DESCRIPTION	BY
1.	02-02-15	Revisions Per County Comments	ELR
2.	03-03-15	SWFWMD Resubmittal	ELR
3.	03-08-15	Access connection and Sidewalk	JAC
4.	08-07-15	County Resubmittal	ELR
5.	09-22-15	County Resubmittal - Address Comments Mod 1	ELR
6.			
7.			
8.			
9.			

Engineering ~ Planning
Environmental Science
4260 West Linebaugh Avenue
Tampa, Florida 33624
Phone: 813.265.3130 Fax: 813.265.6610
www.wraengineering.com CA 00007652

DRAWING
SWPPP NOTES
DESIGNED: JAC DRAWN: ELR APPROVED: JAC

PROJECT
CYPRESS CREEK
TOWN CENTER NORTH
JOB #: 0967 DATUM: NGVD 1929

JOSEPH A. CIMINO
FL P.E. # 67540

Original Date: 07-14-14
Sheet
C-403

CAD File Name: S:\~PROJECT FILES\0967 - PASCO 54 INC. - CCTC NORTH\CADD\PLANS\C-406_SWPPP_NOTES.DWG
Plot Date: 9/23/2015 11:55:54 AM

2012 Water Resource Associates, Inc.

CAD File Name: S:\~PROJECT FILES\0967 - PASCO 54 INC. - CCTC NORTH\CADD\PLANS\C-500_WATER_SEWER_PLANS.DWG   Plot Date: 9/23/2015 11:56:22 AM

2012 Water Resource Associates, Inc.

WATER, WASTEWATER & REUSE WATER SYSTEM NOTES

1. HORIZONTAL SEPARATION BETWEEN UNDERGROUND WATER MAINS AND SANITARY OR STORM SEWERS, WASTEWATER OR STORMWATER FORCE MAINS, RECLAIMED WATER PIPELINES, AND ON-SITE SEWAGE TREATMENT AND DISPOSAL SYSTEMS SHALL BE AS FOLLOWS:
A. NEW OR RELOCATED UNDERGROUND WATER MAINS SHALL BE LAID TO PROVIDE A HORIZONTAL DISTANCE OF AT LEAST THREE FEET BETWEEN THE OUTSIDE OF THE WATER MAIN AND THE OUTSIDE OF ANY EXISTING OR PROPOSED STORM SEWER, STORMWATER FORCE MAIN, OR PIPELINE CONVEYING RECLAIMED WATER REGULATED UNDER PART III OF CHAPTER 62-610,
B. NEW OR RELOCATED UNDERGROUND WATER MAINS SHALL BE LAID TO PROVIDE A HORIZONTAL DISTANCE OF AT LEAST THREE FEET, AND PREFERABLY TEN FEET, BETWEEN THE OUTSIDE OF THE WATER MAIN AND THE OUTSIDE OF ANY EXISTING OR PROPOSED VACUUM-TYPE SANITARY SEWER.
C. NEW OR RELOCATED UNDERGROUND WATER MAINS SHALL BE LAID TO PROVIDE A HORIZONTAL DISTANCE AT LEAST SIX FEET, AND PREFERABLY TEN FEET, BETWEEN THE OUTSIDE OF THE WATER MAIN AND THE OUTSIDE OF ANY EXISTING OR PROPOSED GRAVITY- OR PRESSURE-TYPE SANITARY SEWER, WASTEWATER FORCE MAIN, OR PIPELINE CONVEYING RECLAIMED WATER NOT REGULATED UNDER PART III OF CHAPTER 62-610, F.A.C. THE MINIMUM HORIZONTAL SEPARATION DISTANCE BETWEEN WATER MAINS AND GRAVITY-TYPE SANITARY SEWERS SHALL BE REDUCED TO THREE FEET WHERE THE BOTTOM OF THE WATER MAIN IS LAID AT LEAST SIX INCHES ABOVE THE TOP OF THE SEWER.
D. NEW OR RELOCATED UNDERGROUND WATER MAINS SHALL BE LAID TO PROVIDE A HORIZONTAL DISTANCE OF AT LEAST TEN FEET BETWEEN THE OUTSIDE OF THE WATER MAIN AND ALL PARTS OF ANY EXISTING OR PROPOSED "ON-SITE SEWAGE TREATMENT AND DISPOSAL SYSTEM" AS DEFINED IN SECTION 381.0065(2), F.S., AND RULE 64E-6.002, F.A.C.
2. VERTICAL SEPARATION BETWEEN UNDERGROUND WATER MAINS AND SANITARY OR STORM SEWERS, WASTEWATER OR STORMWATER FORCE MAINS, AND RECLAIMED WATER PIPELINES SHALL BE AS FOLLOWS:
A. NEW OR RELOCATED UNDERGROUND WATER MAINS CROSSING ANY EXISTING OR PROPOSE GRAVITY-OR VACUUM-TYPE SANITARY SEWER OR STORM SEWER SHALL BE LAID SO THE OUTSIDE OF THE WATER MAIN IS AT LEAST SIX INCHES, AND PREFERABLY 12 INCHES, ABOVE OR AT LEAST 12 INCHES BELOW THE OUTSIDE OF THE OTHER PIPELINE. HOWEVER, IT IS PREFERABLE TO LAY THE WATER MAIN ABOVE THE OTHER PIPELINE.
B. NEW OR RELOCATED UNDERGROUND WATER MAINS CROSSING ANY EXISTING OR PROPOSED PRESSURE-TYPE SANITARY SEWER, WASTEWATER OR STORMWATER FORCE MAIN, OR PIPELINE CONVEYING RECLAIMED WATER SHALL BE LAID SO THE OUTSIDE OF THE WATER MAIN IS AT LEAST 12 INCHES ABOVE OR BELOW THE OUTSIDE OF THE OTHER PIPELINE. HOWEVER, IT IS PREFERABLE TO LAY THE WATER MAIN ABOVE THE OTHER PIPELINE.
C. AT THE UTILITY CROSSINGS DESCRIBED IN PARAGRAPHS (A) AND (B) ABOVE, ONE FULL LENGTH OF WATER MAIN PIPE SHALL BE CENTERED ABOVE OR BELOW THE OTHER PIPELINE SO THE WATER MAIN JOINTS WILL BE AS FAR AS POSSIBLE FROM THE OTHER PIPELINE. ALTERNATIVELY, AT SUCH CROSSINGS, THE PIPES SHALL BE ARRANGED SO THAT ALL WATER MAIN JOINTS ARE AT LEAST THREE FEET FROM ALL JOINTS IN VACUUM-TYPE SANITARY SEWERS, STORM SEWERS, STORMWATER FORCE MAINS, OR PIPELINES CONVEYING RECLAIMED WATER REGULATED UNDER PART III OF CHAPTER 62-610, F.A.C. AND AT LEAST SIX FEET FROM ALL JOINTS IN GRAVITY-OR PRESSURE-TYPE SANITARY SEWERS, WASTEWATER FORCE MAINS, OR PIPELINES CONVEYING RECLAIMED WATER NOT REGULATED UNDER PART III OF CHAPTER 62-610, F.A.C.
3. SEPARATION BETWEEN WATER MAINS AND SANITARY OR STORM SEWER MANHOLES.
A. NO WATER MAIN SHALL PASS THROUGH, OR COME INTO CONTACT WITH, ANY PART OF A SANITARY SEWER MANHOLE, STORM SEWER MANHOLE OR INLET STRUCTURE.
4. ALL UTILITY MATERIAL AND WORKMANSHIP MUST COMPLY WITH "PASCO COUNTY STANDARDS FOR DESIGN AND CONSTRUCTION OF WATER, WASTEWATER, AND RECLAIMED WATER FACILITIES", JUNE 1995 EDITION.T
5. ALL PVC WATER MAINS 4 - 12 INCHES SHALL BE IN ACCORDANCE WITH AWWA C-900. PIPE SHALL BE CLASS 200 AND MEET THE REQUIREMENTS OF DR-14.
6. ALL PVC WATER MAIN SMALLER THAN 4 INCHES SHALL BE CLASS 200 AND MEET THE REQUIREMENTS OF SDR 21 IN ACCORDANCE WITH ASTM D-2241.
7. ALL PVC SANITARY SEWER PIPE SHALL MEET THE REQUIREMENTS OF ASTM D-3034 WITH THICKNESS AS FOLLOWS: AT INVERTS FROM 0' - 12' SHALL BE SDR-35, INVERT DEPTHS FROM 12' - 18' SHALL BE SDR 26. FOR INVERTS DEEPER THAN18', DUCTILE IRON PIPE SHALL BE USED.
8. ALL DUCTILE IRON UTILITY WATER MAIN, SANITARY SEWER PIPE AND REUSE WATER MAINS SHALL BE CLASS 50 IN ACCORDANCE WITH ANSI A 21.52.
9. RECLAIMED WATER MAINS 4 - 12 INCHES SHALL BE IN ACCORDANCE WITH AWWA C-900, DR18. RECLAIMED WATER MAINS 14 - 24 INCHES SHALL BE IN ACCORDANCE WITH AWWA C-905, DR25. ALL PIPE SHALL BE CLASS 150.
10. ALL PVC REUSE WATER MAINS SMALLER THAN 4" SHALL BE CLASS 200 AND MEET THE REQUIREMENTS OF SDR 21 IN ACCORDANCE WITH ASTM D-2241.
11. ALL WATER MAINS, SANITARY SEWER MAINS AND RECLAIMED WATER MAINS SHALL HAVE A MINIMUM OF 36 INCHES OF COVER, EXCEPT AS NOTED.
12. PRIOR TO COMMENCING NEW WORK WHICH REQUIRES CONNECTING TO EXISTING LINES OR APPURTENANCES, THE CONTRACTOR SHALL NOTIFY THE APPROPRIATE UTILITY AND SHALL VERIFY THE LOCATION AND ELEVATION OF THE EXISTING CONNECTION POINT AND NOTIFY THE DEVELOPER'S ENGINEER OF ANY CONFLICTS OR DISCREPANCIES.
13. CONNECTIONS INTO EXISTING COUNTY-OWNED SYSTEMS SHALL BE VIA WET TAP. WET TAPS SHALL BE PERFORMED BY THE PASCO COUNTY UTILITIES SERVICES BRANCH AT THE OWNER'S EXPENSE. MATERIALS FOR WET TAPS LARGER THAN 2" SHALL BE PROVIDED AND INSTALLED BY THE PROJECT CONTRACTOR. EXCAVATION, BACKFILL, AND SURFACE RESTORATION SHALL BE THE CONTRACTOR'S RESPONSIBILITY.
14. LOCATION OF THE SANITARY SEWER SERVICE LATERALS, IF INDICATED ON THE PLANS ARE A DISTANCE FROM THE DOWNSTREAM MANHOLE.
15. LOCATION OF THE WATER SERVICE SLEEVE, IF INDICATED ON THE PLANS, ARE PER THE CENTERLINE ROAD STATIONING.
16. CONFLICTS BETWEEN REUSE WATER AND STORM, SANITARY SEWER OR WATER MAIN TO BE RESOLVED BY ADJUSTING THE REUSE WATER LINES AS NECESSARY.
17. JOINT RESTRAINTS SHALL BE PROVIDED AT ALL FITTINGS, JOINTS AND BENDS AS SHOWN ON DETAILS.
18. ALL PIPE AND FITTINGS SHALL BE CLEARLY MARKED WITH THE NAME OR TRADEMARK OF THE MANUFACTURER, THE BATCH NUMBER, THE LOCATION OF THE PLANT AND STRENGTH DESIGNATION, AS APPLICABLE . ALL PIPE SHALL BE LAID WITH A TWO INCH METALLIC TAPE APPROPRIATELY COLOR CODED AND IMPRINTED WITH THE TYPE OF SERVICE 12 INCHES TO 18 INCHES BELOW FINAL GRADE, DIRECTLY ABOVE THE UTILITY FOR IDENTIFICATION AND EASE OF LOCATION. THE APPROPRIATE TAPE COLOR CODES ARE AS FOLLOWS:
GREEN SANITARY FORCE MAIN
BLUE POTABLE WATER
PURPLE TREATED EFFLUENT FOR REUSE
19. THE CONTRACTOR SHALL TEST ALL GRAVITY SEWERS IN ACCORDANCE WITH PASCO COUNTY REGULATIONS. IF ACCEPTABLE, SAID TESTS WILL BE CERTIFIED BY THE ENGINEER OF RECORD AS REQUIRED.
20. PIPE DEFLECTION SHALL BE IN ACCORDANCE WITH AWWA STANDARD C-600, LATEST EDITION.
21. THRUST BLOCKS ARE NOT ALLOWED! RESTRAINED JOINTS SHALL BE USED ON ALL PRESSURIZED PIPING.
22. FIRE HYDRANTS WILL REQUIRE FLOW TESTING AND COLOR-CODING BASED ON TEST RESULTS.

KEY MAP

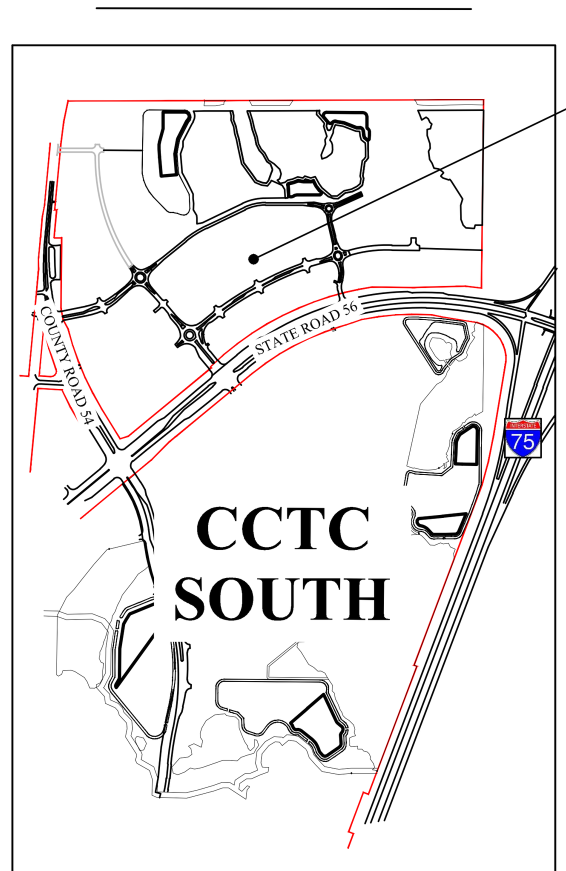

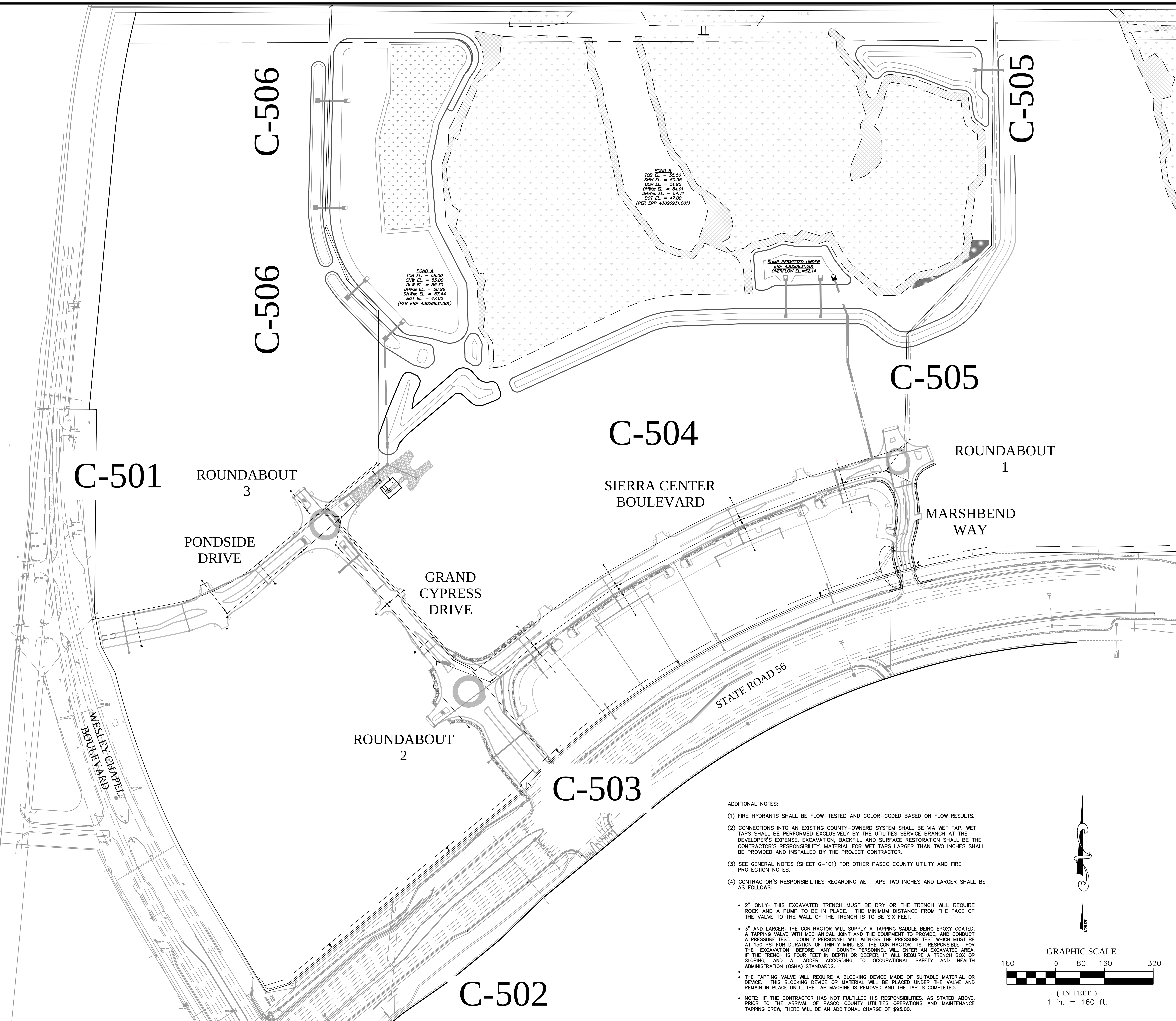

ADDITIONAL NOTES:

(1) FIRE HYDRANTS SHALL BE FLOW–TESTED AND COLOR–CODED BASED ON FLOW RESULTS.

(2) CONNECTIONS INTO AN EXISTING COUNTY–OWNERD SYSTEM SHALL BE VIA WET TAP. WET TAPS SHALL BE PERFORMED EXCLUSIVELY BY THE UTILITIES SERVICE BRANCH AT THE DEVELOPER'S EXPENSE. EXCAVATION, BACKFILL AND SURFACE RESTORATION SHALL BE THE CONTRACTOR'S RESPONSIBILITY. MATERIAL FOR WET TAPS LARGER THAN TWO INCHES SHALL BE PROVIDED AND INSTALLED BY THE PROJECT CONTRACTOR.

(3) SEE GENERAL NOTES (SHEET G–101) FOR OTHER PASCO COUNTY UTILITY AND FIRE PROTECTION NOTES.

(4) CONTRACTOR'S RESPONSIBILITIES REGARDING WET TAPS TWO INCHES AND LARGER SHALL BE AS FOLLOWS:

- 2" ONLY- THIS EXCAVATED TRENCH MUST BE DRY OR THE TRENCH WILL REQUIRE ROCK AND A PUMP TO BE IN PLACE. THE MINIMUM DISTANCE FROM THE FACE OF THE VALVE TO THE WALL OF THE TRENCH IS TO BE SIX FEET.
- 3" AND LARGER- THE CONTRACTOR WILL SUPPLY A TAPPING SADDLE BEING EPOXY COATED, A TAPPING VALVE WITH MECHANICAL JOINT AND THE EQUIPMENT TO PROVIDE, AND CONDUCT A PRESSURE TEST. COUNTY PERSONNEL WILL WITNESS THE PRESSURE TEST WHICH MUST BE AT 150 PSI FOR DURATION OF THIRTY MINUTES. THE CONTRACTOR IS RESPONSIBLE FOR THE EXCAVATION BEFORE ANY COUNTY PERSONNEL WILL ENTER AN EXCAVATED AREA. IF THE TRENCH IS FOUR FEET IN DEPTH OR DEEPER, IT WILL REQUIRE A TRENCH BOX OR SLOPING, AND A LADDER ACCORDING TO OCCUPATIONAL SAFETY AND HEALTH ADMINISTRATION (OSHA) STANDARDS.
- THE TAPPING VALVE WILL REQUIRE A BLOCKING DEVICE MADE OF SUITABLE MATERIAL OR DEVICE. THIS BLOCKING DEVICE OR MATERIAL WILL BE PLACED UNDER THE VALVE AND REMAIN IN PLACE UNTIL THE TAP MACHINE IS REMOVED AND THE TAP IS COMPLETED.
- NOTE: IF THE CONTRACTOR HAS NOT FULFILLED HIS RESPONSIBILITIES, AS STATED ABOVE, PRIOR TO THE ARRIVAL OF PASCO COUNTY UTILITIES OPERATIONS AND MAINTENANCE TAPPING CREW, THERE WILL BE AN ADDITIONAL CHARGE OF $95.00.

REVISIONS

NO.	DATE	DESCRIPTION	BY
1.	02-02-15	Revisions Per County Comments	ELR
2.	03-03-15	SWFWMD Resubmittal	ELR
3.	03-08-15	Access connection and Sidewalk	JAC
4.	08-07-15	County Resubmittal	ELR
5.	09-22-15	County Resubmittal - Address Comments Mod 1	ELR
6.			
7.			
8.			
9.			

Engineering ~ Planning
Environmental Science
4260 West Linebaugh Avenue
Tampa, Florida 33624
Phone: 813.265.3130 Fax: 813.265.6610
www.wraengineering.com CA 00007652

DRAWING
OVERALL WATER AND SEWER PLAN
DESIGNED: JAC DRAWN: ELR APPROVED: JAC

PROJECT
CYPRESS CREEK TOWN CENTER NORTH
JOB #: 0967 DATUM: NGVD 1929

JOSEPH A. CIMINO
FL P.E. # 67540

Original Date: 07-14-14
Sheet
C-500

KEY MAP

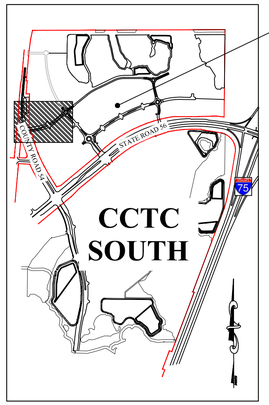

EASEMENT NOTES:

LIMITS OF PROPOSED PUBLIC ACCESS/UTILITY EASEMENT DASHED AND SHADED THROUGHOUT C-500 SERIES TO COVER PUBLIC WATER, SEWER AND RECLAIMED UTILITIES, AND PROVIDE PUBLIC ACCESS TO LIFT STATION TRACT DEDICATED TO PASCO COUNTY.

MATCHLINE - SEE SHEET 506

COUNTY ROAD 54

PROJECT BOUNDARY & ROW LINE

INSTALL TEMP. SERVICE-JUMPER CONNECTION DURING CONSTRUCTION TO BE REMOVED AT FINAL CLEARANCE.

WET TAP CONNECTION POINT SEE WET TAP NOTES THIS SHEET SEE SHEET C-601 FOR DETAILS

EXISTING 16" DIP WM

99+85

100+00

101+00

102+00

103+00

104+00

105+00

106+00

107+00

108+00

109+00

110+00

111+00

112+00

112+57

200+00

201+00

202+00

203+00

204+00

205+00

TEE GATE VALE (TYP.)

FIRE HYDRANT ASSEMBLY (TYP.)

8" WM (TYP.)

LIMITS OF PROPOSED PUBLIC ACCESS/UTILITY EASEMENT (SEE EASEMENT NOTE THIS SHEET)

136 LF 8" PVC @ 0.46%

SS-1
STA: 104+36.53
OFF: -94.19 L
RIM: 60.91
INV: 49.17 SE

SS-2
STA: 104+63.51
OFF: 39.48 R
RIM: 60.89
INV: 48.55 NW
INV: 48.55 S
INV: 48.45 NE

50 LF 8" PVC @ 0.46%

SS-1B
STA: 104+42.02
OFF: 83.96 R
RIM: 60.93
INV: 48.78 N

326 LF 8" PVC @ 0.45%

FIRE HYDRANT ASSEMBLY (TYP.)

PONDSIDE DRIVE

SS-3
STA: 107+83.12
OFF: 21.26 R
RIM: 61.18
INV: 46.98 SW
INV: 46.88 NE

8" WM (TYP.)

TEE
GATE VALE
(TYP.)

SS-4A
STA: 200+10.78
OFF: 13.81 R
RIM: 60.70
INV: 39.26 SE

96' of 8" PVC @ 0.45%

SS-4
STA: 201+06.48
OFF: 15.19 R
RIM: 61.75
INV: 38.83 NW
INV: 38.73 E

ROUNDABOUT #3

105' of 8" PVC @ 0.45%

SS-7B (DROP)
STA:111+21.35
OFF:5.23R
RIM:61.74
INV IN:35.45 SW
INV IN:43.45 SW
INV OUT:35.35 SE

37' of 8" PVC @ 0.46%

SS-7C
STA: 111+20.64
OFF: -31.46 L
RIM: 61.55
INV: 43.62 SE

GATE VALE AND PLUG

8"X2" TEE
75 LF - 2" SERVICE LINE

8" 45° BEND

8" 45° BEND

8" WM (TYP.)

3/4" METER OUTSIDE FENCE WITH RPZ INSIDE FENCE

45'

55'

SEE DETAIL ON SHEET 509 FOR LIFT STATION PARCEL

LIFT STATION EFFLUENT PIPE
INV: 35.16'

42' of 10" PVC @ 0.45%

175' of 10" PVC @ 0.46%

SS-7A (DROP)
STA: 109+46.58
OFF: 17.43 R
RIM: 61.92
INV: 36.36 S
INV: 45.26 SW
INV: 38.26 W
INV: 36.26 NE

93' of 8" PVC @ 0.45%

164' of 8" PVC @ 0.99%

8" GV

681 LF
8" RCW

SS-7
STA: 202+40.52
OFF: 17.01 R
RIM: 61.45
INV: 36.88 SE
INV: 36.78 N

GRAND CYPRESS DRIVE

257' of 8" PVC @ 0.45%

LIMITS OF PROPOSED PUBLIC ACCESS/UTILITY EASEMENT (SEE EASEMENT NOTE THIS SHEET)

SS-5A
STA: 204+98.63
OFF: 65.23 R
RIM: 58.80
INV: 38.34 NE

49' of 8" PVC @ 0.40%

MATCHLINE - SEE SHEET C-503

NORTH

GRAPHIC SCALE

40 0 20 40 80

(IN FEET)
1 in. = 40 ft.

REVISIONS			
NO.	DATE	DESCRIPTION	BY
1.	02-02-15	Revisions Per County Comments	ELR
2.	03-03-15	SWFWMD Resubmittal	ELR
3.	06-04-15	Access Gate and Sidewalk	ELR
4.	08-07-15	County Resubmittal	ELR
5.	09-22-15	County Resubmittal - Address Comments Mod 1	ELR
6.			
7.			
8.			
9.			

Engineering ~ Planning
Environmental Science
4260 West Linebaugh Avenue
Tampa, Florida 33624
Phone: 813.265.3130 Fax: 813.265.6610
www.wraengineering.com CA 00007652

DRAWING
WATER AND SEWER PLANS

DESIGNED: JAC DRAWN: ELR APPROVED: JAC

PROJECT
CYPRESS CREEK
TOWN CENTER NORTH

JOB #: 0967 DATUM: NGVD 1929

JOSEPH A. CIMINO
FL P.E. # 67540

Original Date: 07-14-14
Sheet
C-501

2012 Water Resource Associates, Inc. Plot Date: 9/23/2015 11:56:30 AM CAD File Name: S:\~PROJECT FILES\0967 - PASCO 54 INC. - CCTC NORTH\CADD\PLANS\C-500_WATER_SEWER_PLANS.DWG

KEY MAP

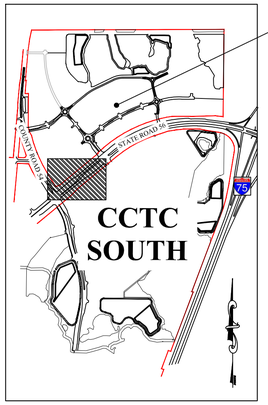

MATCHLINE - SEE SHEET C-503

LIMITS OF PROPOSED PUBLIC ACCESS/UTILITY EASEMENT. (SEE EASEMENT NOTE THIS SHEET)

BEND(S) (TYP.)

213+00

213+50

STATE ROAD 56

FIRE HYDRANT ASSEMBLY (TYP.)

8" WM (TYP.) - SEE SHEET(S) C-611-616 FOR PROFILE

20' TYPE 'D' BUFFER

LIMITS OF PROPOSED PUBLIC ACCESS/UTILITY EASEMENT 15 FT OFF OF ROW LINE. (SEE EASEMENT NOTE THIS SHEET)

SR 56 R.O.W.

STATE ROAD 56

PROJECT BOUNDARY & ROW LINE

WESLEY CHAPEL BLVD

WET TAP CONNECTION POINT SEE WET TAP NOTES THIS SHEET SEE SHEET(S) C-611-616 FOR PROFILE

INSTALL TEMP. SERVICE-JUMPER CONNECTION DURING CONSTRUCTION TO BE REMOVED AT FINAL CLEARANCE.

BEND(S) (TYP.)

EXISTING 16" DIP WM

EASEMENT NOTES:

LIMITS OF PROPOSED PUBLIC ACCESS/UTILITY EASEMENT DASHED AND SHADED THROUGHOUT C-500 SERIES TO COVER PUBLIC WATER, SEWER AND RECLAIMED UTILITIES, AND PROVIDE PUBLIC ACCESS TO LIFT STATION TRACT DEDICATED TO PASCO COUNTY.

GRAPHIC SCALE

40 0 20 40 80

(IN FEET)
1 in. = 40 ft.

REVISIONS

NO.	DATE	DESCRIPTION	BY
1.	02-02-15	Revisions Per County Comments	ELR
2.	03-03-15	SWFWMD Resubmittal	ELR
3.	06-05-15	Access connection and Sidewalk	JAC
4.	08-07-15	County Resubmittal	ELR
5.	09-22-15	County Resubmittal - Address Comments Mod 1	ELR
6.			
7.			
8.			
9.			

Engineering ~ Planning
Environmental Science
4260 West Linebaugh Avenue
Tampa, Florida 33624
Phone: 813.265.3130 Fax: 813.265.6610
www.wraengineering.com CA 00007652

DRAWING

WATER AND SEWER PLANS

DESIGNED: JAC DRAWN: ELR APPROVED: JAC

PROJECT

CYPRESS CREEK
TOWN CENTER NORTH

JOB #: 0962 DATUM: NGVD 1929

JOSEPH A. CIMINO
FL P.E. # 67540

Original Date: 07-14-14

Sheet

C-502

2012 Water Resource Associates, Inc. Plot Date: 9/22/2015 11:56:35 AM CAD File Name: S:\~PROJECT FILES\0967 - PASCO 54 INC. - CCTC NORTH\CADD\PLANS\C-500_WATER_SEWER_PLANS.DWG

KEY MAP

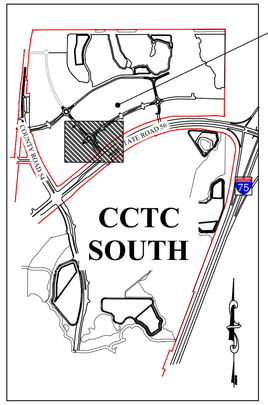

EASEMENT NOTES:

LIMITS OF PROPOSED PUBLIC ACCESS/UTILITY EASEMENT DASHED AND SHADED THROUGHOUT C-500 SERIES TO COVER PUBLIC WATER, SEWER AND RECLAIMED UTILITIES, AND PROVIDE PUBLIC ACCESS TO LIFT STATION TRACT DEDICATED TO PASCO COUNTY.

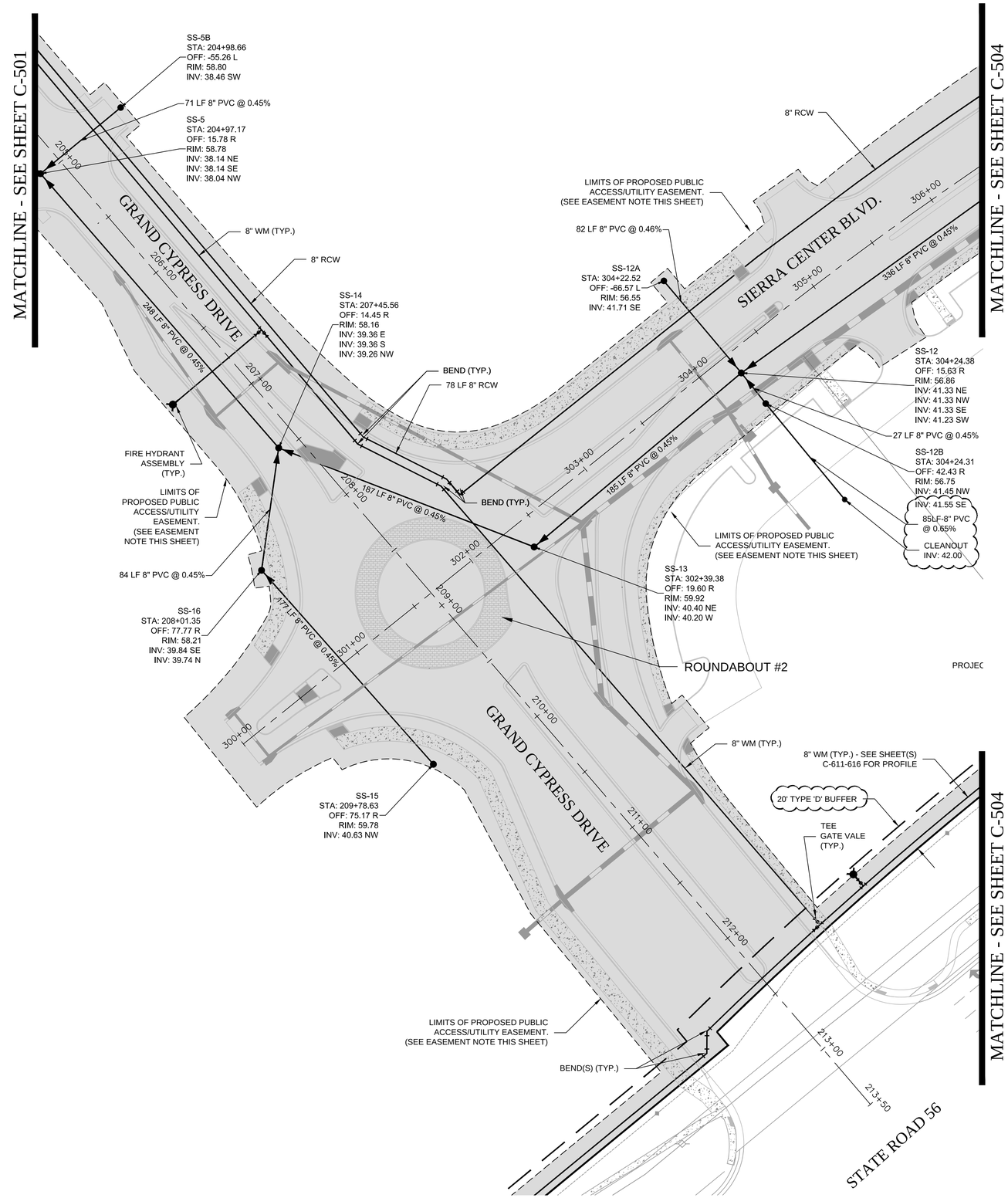

GRAPHIC SCALE

40 0 20 40 80

(IN FEET)
1 in. = 40 ft.

REVISIONS

NO.	DATE	DESCRIPTION	BY
1.	02-02-15	Revisions Per County Comments	ELR
2.	03-03-15	SWFWMD Resubmittal	ELR
3.	06-04-15	Access connection and Sidewalk	JAC
4.	08-07-15	County Resubmittal	ELR
5.	09-22-15	County Resubmittal - Address Comments Mod 1	ELR
6.			
7.			
8.			
9.			

Engineering ~ Planning
Environmental Science
4260 West Linebaugh Avenue
Tampa, Florida 33624
Phone: 813.265.3130 Fax: 813.265.6610
www.wraengineering.com CA 00007652

DRAWING

WATER AND SEWER PLANS

DESIGNED: JAC DRAWN: ELR APPROVED: JAC

PROJECT

CYPRESS CREEK
TOWN CENTER NORTH

JOB #: 0967 DATUM: NGVD 1929

JOSEPH A. CIMINO
FL P.E. # 67540

Original Date: 07-14-14

Sheet

C-503

2012 Water Resource Associates, Inc. Plot Date: 9/23/2015 11:56:40 AM CAD File Name: S:\~PROJECT FILES\0967 - PASCO 54 INC. - CCTC NORTH\CADD\PLANS\C-500_WATER_SEWER_PLANS.DWG

KEY MAP

GRAPHIC SCALE

40 0 20 40 80

(IN FEET)
1 in. = 40 ft.

EASEMENT NOTES:

LIMITS OF PROPOSED PUBLIC ACCESS/UTILITY EASEMENT DASHED AND SHADED THROUGHOUT C-500 SERIES TO COVER PUBLIC WATER, SEWER AND RECLAIMED UTILITIES, AND PROVIDE PUBLIC ACCESS TO LIFT STATION TRACT DEDICATED TO PASCO COUNTY.

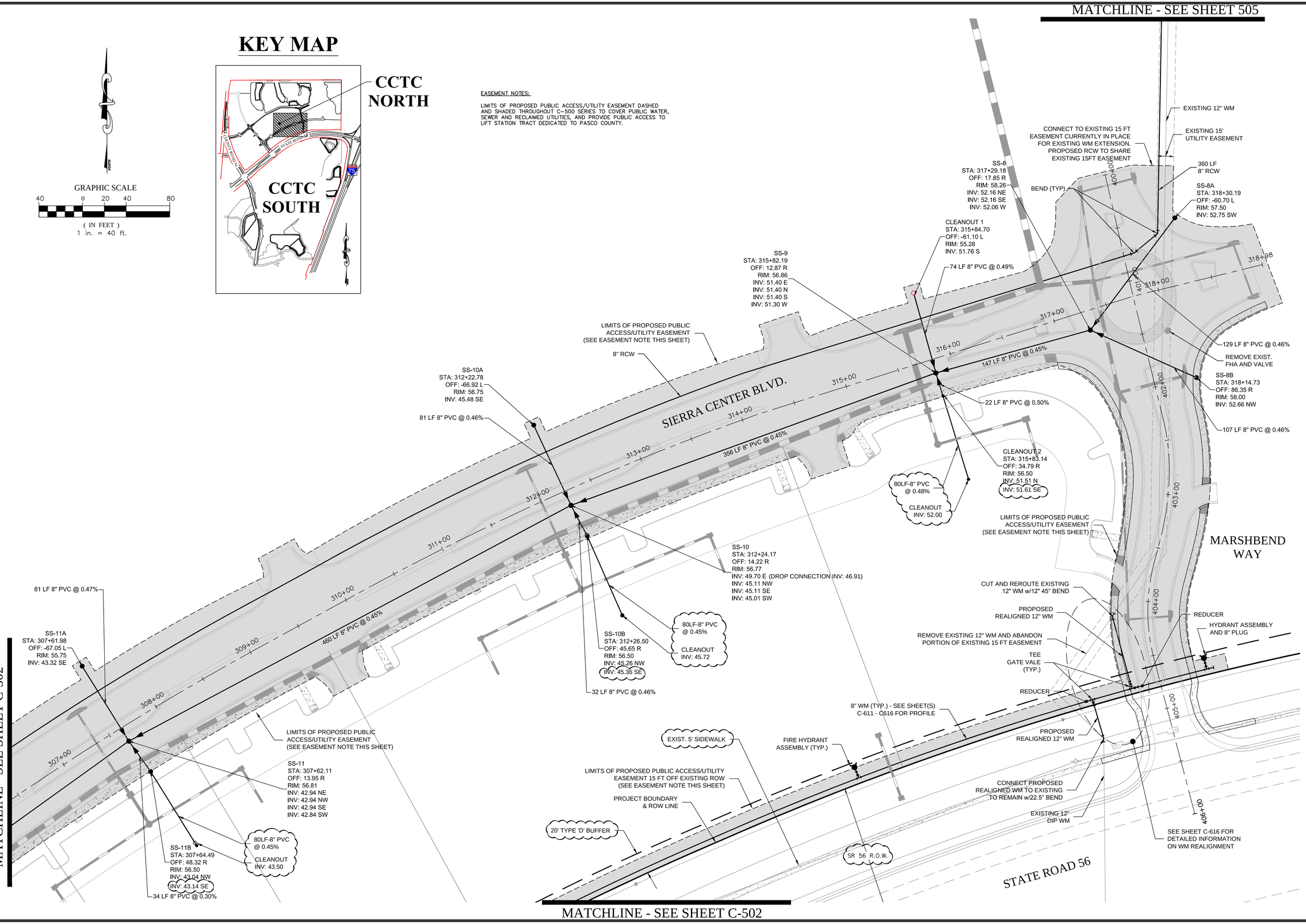

REVISIONS			
NO.	DATE	DESCRIPTION	BY
1.	02-02-15	Revisions Per County Comments	ELR
2.	03-03-15	SWFWMD Resubmittal	ELR
3.	03-06-15	Access Connection and Sidewalk	ELR
4.	08-07-15	County Resubmittal	ELR
5.	09-22-15	County Resubmittal - Address Comments Mod 1	ELR
6.			
7.			
8.			
9.			

Engineering ~ Planning
Environmental Science
4260 West Linebaugh Avenue
Tampa, Florida 33624
Phone: 813.265.3130 Fax: 813.265.6610
www.wraengineering.com CA 00007652

DRAWING: WATER AND SEWER PLANS

DESIGNED: JAC DRAWN: ELR APPROVED: JAC

PROJECT: CYPRESS CREEK TOWN CENTER NORTH

JOB #: 0967 DATUM: NGVD 1929

JOSEPH A. CIMINO
FL P.E. # 67540

Original Date: 07-14-14

Sheet

C-504

2012 Water Resource Associates, Inc. Plot Date: 9/22/2015 11:56:45 AM CAD File Name: S:\--PROJECT FILES\0967 - PASCO 54 INC. - CCTC NORTH\CADD\PLANS\C-500_WATER_SEWER_PLANS.DWG

MATCHLINE - SEE RIGHT

788 LF
8" RCW

45°
(8")

RCW RUN WITHIN EXISTING 15' UTILITY EASEMENT TO BE COORDINATED WITH THE UTILITY DEPARTMENT

400 LF
8" RCW

EXISTING 15 FT EASEMENT CURRENTLY IN PLACE FOR EXISTING WM EXTENSION. PROPOSED RCW TO SHARE EXISTING 15FT EASEMENT

45°
(8")

GRAPHIC SCALE
40 0 20 40 80
(IN FEET)
1 in. = 40 ft.

MATCHLINE - SEE SHEET C-504

KEY MAP

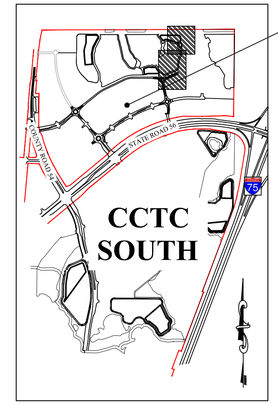

GRAPHIC SCALE
40 0 20 40 80
(IN FEET)
1 in. = 40 ft.

EASEMENT NOTES:

LIMITS OF PROPOSED PUBLIC ACCESS/UTILITY EASEMENT DASHED AND SHADED THROUGHOUT C-500 SERIES TO COVER PUBLIC WATER, SEWER AND RECLAIMED UTILITIES, AND PROVIDE PUBLIC ACCESS TO LIFT STATION TRACT DEDICATED TO PASCO COUNTY.

EXISTING RWM

EXISTING FM

8" WET TAP TO EXISTING 12" DIP RCW
INCLUDE 8" GV

EXISTING UTILITY EASEMENT OFF OF NORTH PROPERTY LINE THAT PROVIDES ACCESS FOR COUNTY TO PUBLIC UTILITIES

RCW RUN WITHIN EXISTING 15' UTILITY EASEMENT TO BE COORDINATED WITH THE UTILITY DEPARTMENT

EXISTING 15 FT EASEMENT CURRENTLY IN PLACE FOR EXISTING WM EXTENSION. PROPOSED RCW TO SHARE EXISTING 15FT EASEMENT

8" RCW

MATCHLINE - SEE LEFT

REVISIONS

NO.	DATE	DESCRIPTION	BY
1.	02-02-15	Revisions Per County Comments	ELR
2.	03-03-15	SWFWMD Resubmittal	ELR
3.	06-04-15	Access connection and Sidewalk	JAC
4.	08-07-15	County Resubmittal	ELR
5.	09-22-15	County Resubmittal - Address Comments Mod 1	ELR
6.			
7.			
8.			
9.			

Engineering ~ Planning
Environmental Science
4260 West Linebaugh Avenue
Tampa, Florida 33624
Phone: 813.265.3130 Fax: 813.265.6610
www.wraengineering.com CA 00007652

DRAWING
WATER AND SEWER PLANS
DESIGNED: JAC DRAWN: ELR APPROVED: JAC

PROJECT
CYPRESS CREEK
TOWN CENTER NORTH
JOB #: 0962 DATUM: NGVD 1929

JOSEPH A. CIMINO
FL P.E. # 67540

Original Date: 07-14-14
Sheet
C-505

2012 Water Resource Associates, Inc. Plot Date: 9/23/2015 11:56:51 AM CAD File Name: S:\~PROJECT FILES\0967 - PASCO 54 INC. - CCTC NORTH\CADD\PLANS\C-500_WATER_SEWER_PLANS.DWG

MATCHLINE - SEE RIGHT

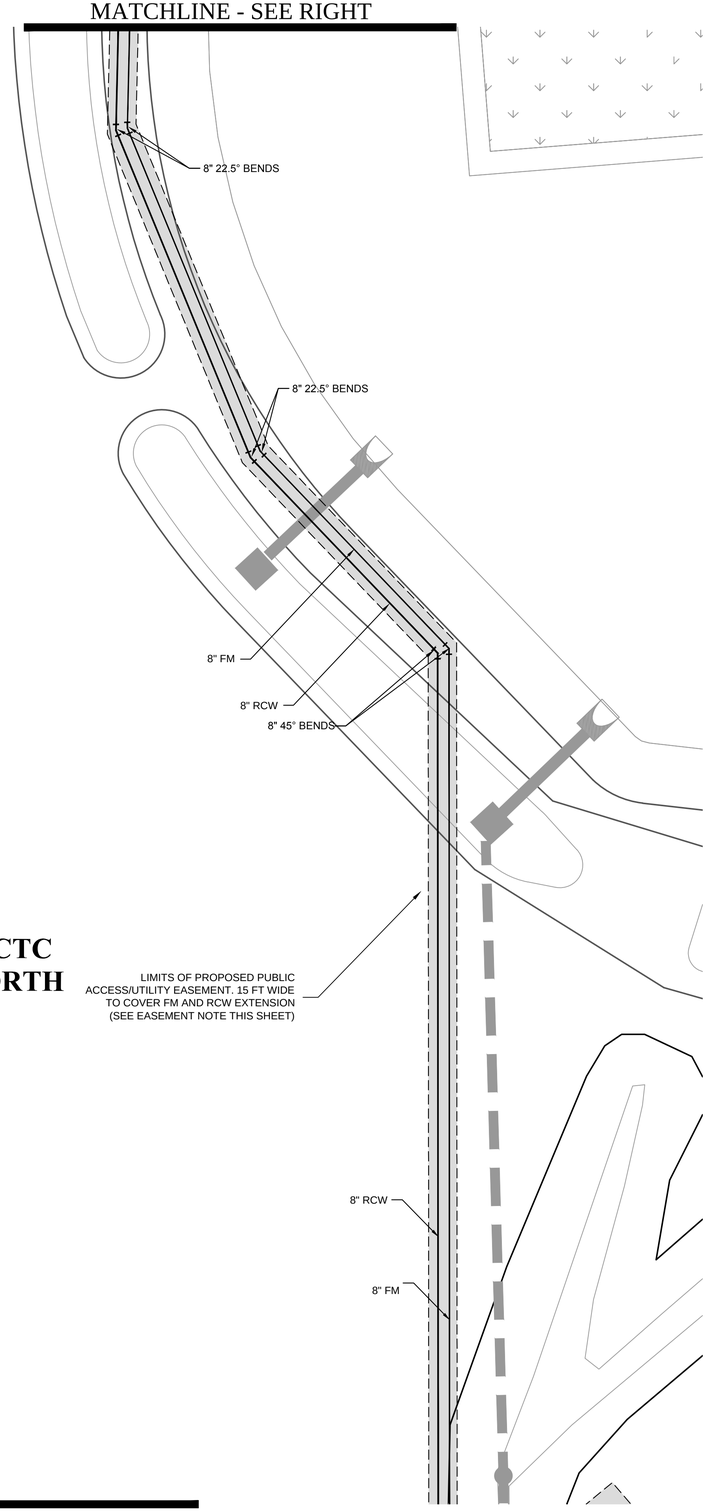

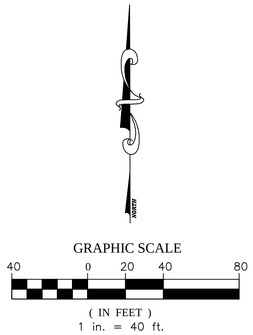

KEY MAP

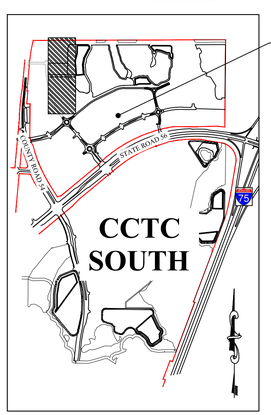

EASEMENT NOTES:

LIMITS OF PROPOSED PUBLIC ACCESS/UTILITY EASEMENT DASHED AND SHADED THROUGHOUT C-500 SERIES TO COVER PUBLIC WATER, SEWER AND RECLAIMED UTILITIES, AND PROVIDE PUBLIC ACCESS TO LIFT STATION TRACT DEDICATED TO PASCO COUNTY.

MATCHLINE - SEE SHEET C-501

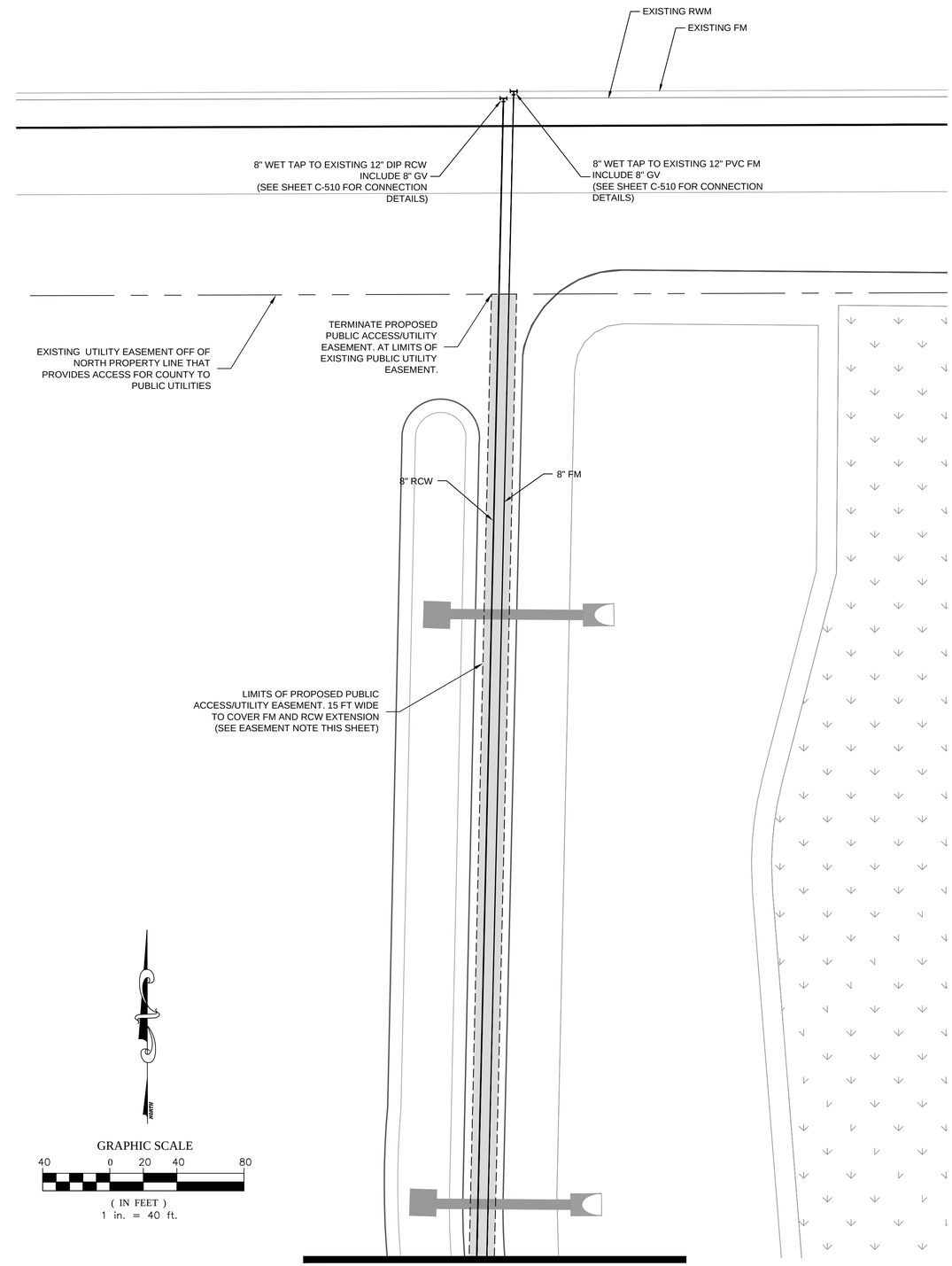

MATCHLINE - SEE LEFT

REVISIONS

NO.	DATE	DESCRIPTION	BY
1.	02-02-15	Revisions Per County Comments	ELR
2.	03-03-15	SWFWMD Resubmittal	ELR
3.	06-04-15	Access connection and Sidewalk	JAC
4.	08-07-15	County Resubmittal	ELR
5.	09-22-15	County Resubmittal - Address Comments Mod 1	ELR
6.			
7.			
8.			
9.			

Engineering ~ Planning
Environmental Science
4260 West Linebaugh Avenue
Tampa, Florida 33624
Phone: 813.265.3130 Fax: 813.265.6610
www.wraengineering.com CA 00007652

DRAWING
WATER AND SEWER PLANS
DESIGNED: JAC DRAWN: ELR APPROVED: JAC

PROJECT
CYPRESS CREEK
TOWN CENTER NORTH
JOB #: 0967 DATUM: NGVD 1929

JOSEPH A. CIMINO
FL. P.E. # 67540

Original Date: 07-14-14
Sheet
C-506

2012 Water Resource Associates, Inc. Plot Date: 9/23/2015 11:56:56 AM CAD File Name: S:--PROJECT FILES\0967 - PASCO 54 INC. - CCTC NORTH\CADD\PLANS\C-500_WATER_SEWER_PLANS.DWG

PIPE RESTRAINT LENGTHS IN FEET
COMMON FITTINGS

WATER MAINS - TEST PRESSURE 150 PSI						
		FITTING TYPE				
		11-1/4°	22-1/2°	45°	90°	DEAD END
PIPE SIZE	4"	2'	4'	8'	20'	45'
	6"	3'	6'	12'	28'	63'
	8"	4'	7'	15'	36'	82'
	10"	4'	9'	18'	43'	98'
	12"	5'	10'	21'	50'	116'
	16"	6'	13'	26'	63'	148'
	20"	7'	15'	31'	76'	179'
	24"	9'	17'	36'	87'	208'

FORCE MAINS - TEST PRESSURE 100 PSI						
		FITTING TYPE				
		11-1/4°	22-1/2°	45°	90°	DEAD END
PIPE SIZE	4"	1'	3'	6'	13'	30'
	6"	2'	4'	8'	19'	42'
	8"	2'	5'	10'	24'	55'
	10"	3'	6'	12'	29'	66'
	12"	3'	7'	14'	34'	77'
	16"	4'	8'	18'	42'	99'
	20"	5'	10'	21'	50'	119'
	24"	6'	11'	24'	58'	139'

RESTRAINT LENGTHS ARE MEASURED FROM THE CENTER LINE OF THE FITTING ALONG THE PIPE IN BOTH DIRECTIONS (EXCEPT DEAD ENDS).

CREATED 02/24/03
REVISED

RESTRAINED JOINT TABLE
COMMON FITTINGS

PROVIDED FOR INFORMATIONAL PURPOSES ONLY. NO MODIFICATIONS WITHOUT WRITTEN PCU APPROVAL

PASCO COUNTY UTILITIES — DETAIL 28

PIPE RESTRAINT LENGTHS IN FEET
TEES (BRANCH SIDE)

WATER MAINS - TEST PRESSURE 150 PSI										
		BRANCH SIZE								
		3"	4"	6"	8"	10"	12"	16"	20"	24"
RUN SIZE	3"	6'	14'	30'	—	—	—	—	—	—
	4"	2'	11'	28'	44'	—	—	—	—	—
	6"	1'	2'	22'	40'	52'	—	—	—	—
	8"	1'	1'	16'	35'	48'	62'	—	—	—
	10"	1'	1'	10'	30'	44'	58'	83'	—	—
	12"	1'	1'	3'	25'	40'	55'	80'	103'	—
	16"	1'	1'	1'	14'	31'	48'	75'	98'	119'
	20"	1'	1'	1'	2'	22'	40'	69'	94'	116'
	24"	1'	1'	1'	1'	11'	31'	63'	89'	111'

RESTRAINT LENGTHS ARE MEASURED FROM THE CENTER LINE OF THE TEE ALONG THE BRANCH FOR THE DISTANCE INDICATED. A MINIMUM OF 5 FEET OF RESTRAINED PIPE MUST BE INSTALLED ON BOTH RUNS OF THE TEE. MEGALUG TYPE RESTRAINERS ARE REQUIRED ON ALL JOINTS.

CREATED 02/24/03
REVISED

RESTRAINED JOINT TABLE
TEES (BRANCH SIDE)

PROVIDED FOR INFORMATIONAL PURPOSES ONLY. NO MODIFICATIONS WITHOUT WRITTEN PCU APPROVAL

PASCO COUNTY UTILITIES — DETAIL 29

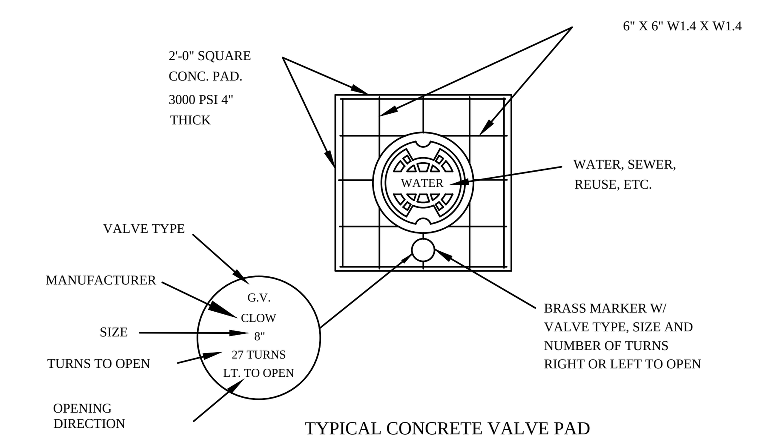

TYPICAL CONCRETE VALVE PAD

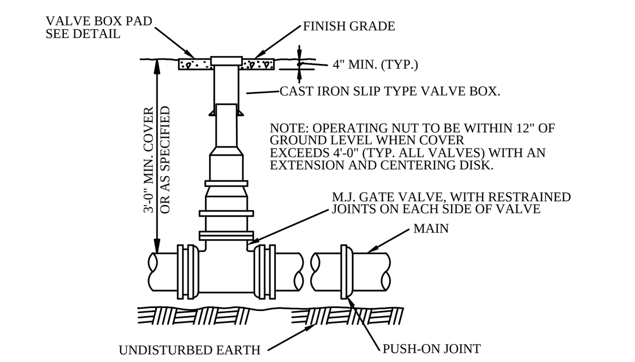

CREATED 02/24/03
REVISED

VALVE BOX DETAIL
SLIP TYPE

PROVIDED FOR INFORMATIONAL PURPOSES ONLY. NO MODIFICATIONS WITHOUT WRITTEN PCU APPROVAL

PASCO COUNTY UTILITIES — DETAIL 27

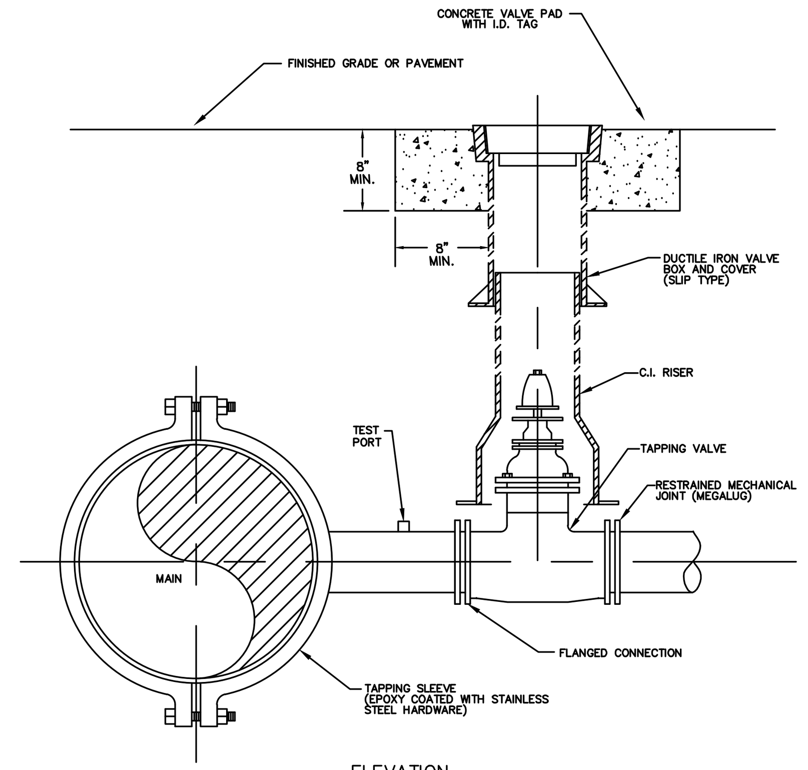

ELEVATION

NOTES:
- SADDLE CONNECTION WILL BE TESTED TO 150 PSI PRIOR TO TAPPING MAIN.
- MECHANICAL JOINTS/UNDERGROUND PIPING SHALL BE RESTRAINED AS SPECIFIED BY COUNTY/ENGINEER.
- VALVE EXTENSION ROD SHALL BE UTILIZED, AS NECESSARY, SO THAT VALVE OPERATING NUT IS A MAXIMUM OF 3' BELOW GRADE.

CREATED 02/24/03
REVISED

WATER, REUSE, AND FORCE MAIN
TAPPING DETAIL W/ VALVE LOCATION

PROVIDED FOR INFORMATIONAL PURPOSES ONLY. NO MODIFICATIONS WITHOUT WRITTEN PCU APPROVAL

PASCO COUNTY UTILITIES — DETAIL 34

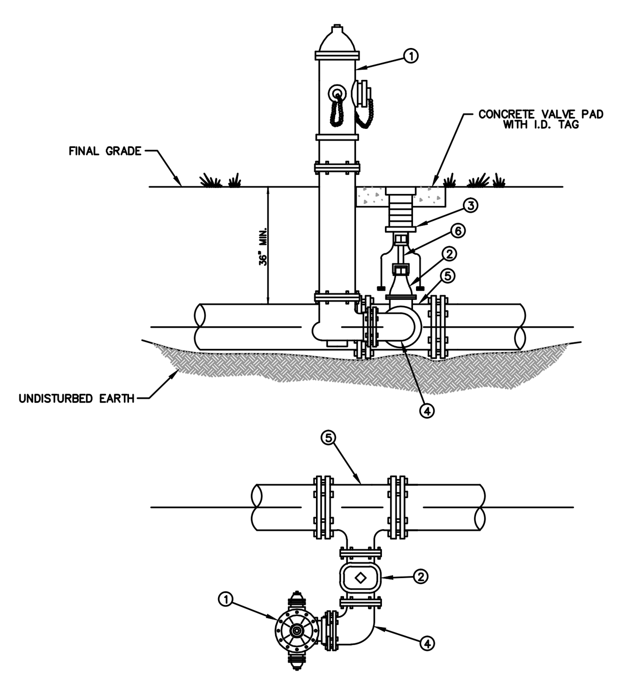

MATERIALS		
ITEM	QUANT.	DESCRIPTION
1	1	HYDRANT, FIRE (5 1/4" VALVE MIN.), PAINTED YELLOW
2	1	6" VALVE, GATE, MJ RESILIENT WEDGE
3	1	BOX, VALVE SLIP TYPE
4	1	6" BEND, ANCHORING, D.I.
5	1	TEE, ANCHORING, MJ
6	*	VALVE EXTENSION ROD, AS NECESSARY (3' MAX. BELOW GRADE)

CREATED 02/24/03
REVISED

PARALLEL TO THE MAIN

PROVIDED FOR INFORMATIONAL PURPOSES ONLY. NO MODIFICATIONS WITHOUT WRITTEN PCU APPROVAL

PASCO COUNTY UTILITIES

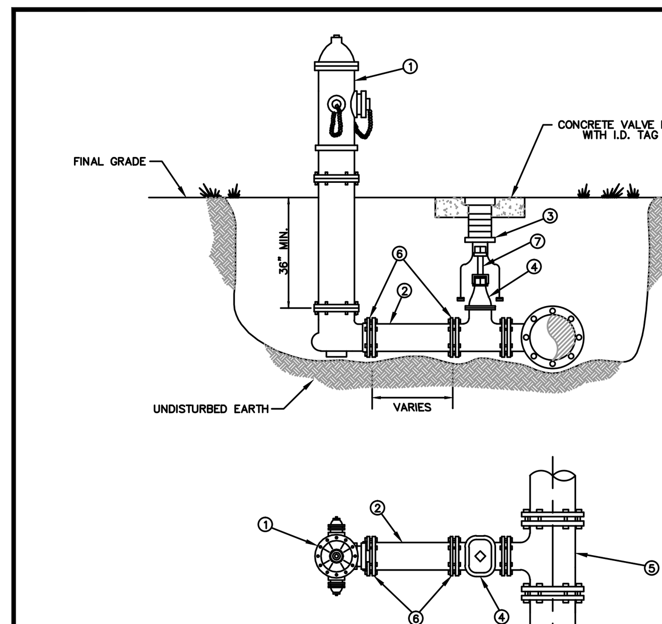

MATERIALS		
ITEM	QUANT.	DESCRIPTION
1	1	HYDRANT, FIRE (5 1/4" VALVE MIN.), PAINTED YELLOW
2	*	6" PIPE, P.V.C. (DR-18)
3	1	BOX, VALVE SLIP TYPE
4	1	6" VALVE, GATE, M.J. RESILIENT WEDGE
5	1	TEE, ANCHORING, M.J.
6	*	6" RESTRAINER GLAND (MEGALUG)
7	*	VALVE EXTENSION ROD, AS NECESSARY (3' MAX. BELOW GRADE)

CREATED 02/24/03
REVISED

FIRE HYDRANT
PERPENDICULAR TO THE MAIN

PROVIDED FOR INFORMATIONAL PURPOSES ONLY. NO MODIFICATIONS WITHOUT WRITTEN PCU APPROVAL

PASCO COUNTY UTILITIES — DETAIL 24

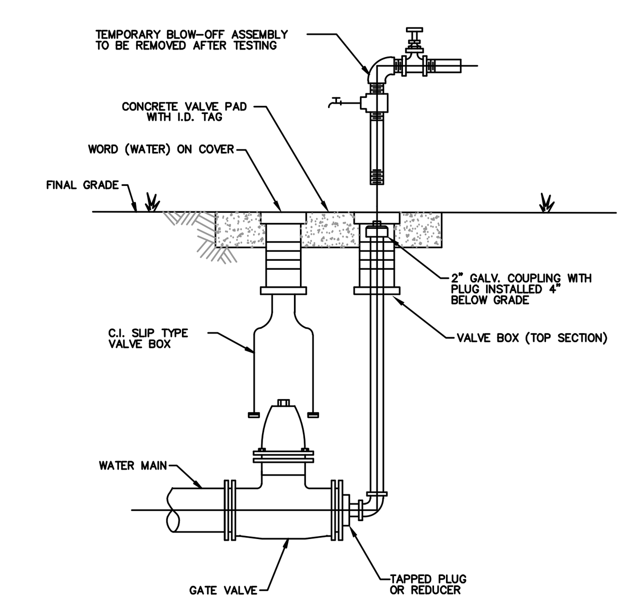

NOTES:
- MECHANICAL JOINTS/UNDERGROUND PIPING SHALL BE RESTRAINED AS SPECIFIED IN JOINT RESTRAINT TABLE (DETAIL 46)
- VALVE EXTENSION ROD SHALL BE UTILIZED, AS NECESSARY, SO THAT VALVE OPERATING NUT IS A MAXIMUM OF 3' BELOW GRADE.

CREATED 02/24/03
REVISED

PERMANENT
BLOW-OFF DETAIL

PROVIDED FOR INFORMATIONAL PURPOSES ONLY. NO MODIFICATIONS WITHOUT WRITTEN PCU APPROVAL

PASCO COUNTY UTILITIES — DETAIL 25

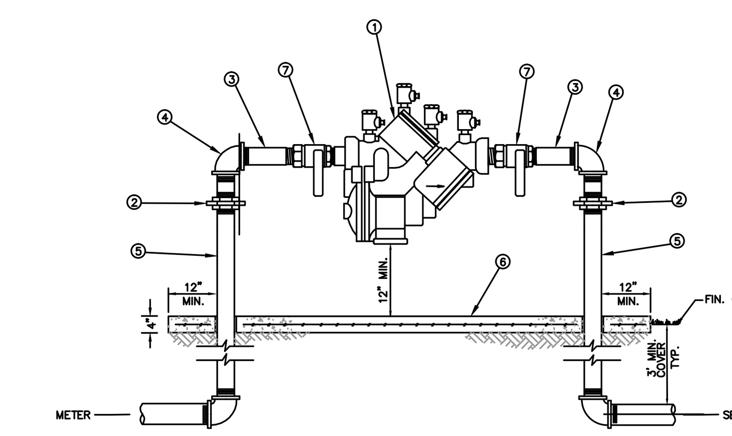

MATERIALS		
ITEM	QUANT.	DESCRIPTION
1	1	BACKFLOW PREVENTER ASSEMBLY, REDUCED PRESSURE ZONE
2	2	UNIONS – GALV.
3	2	NIPPLES – BRASS
4	2	ELBOWS – GALV. 90°
5	2	RISER – GALV.
6	*	CONCRETE SLAB
7	2	BALL VALVES – BRASS OR S.S. (PROVIDED WITH BFP ASS'Y)

NOTE:
- FIELD ADJUST AND CUT ITEM 5 TO THE PROPER LENGTH.
- MINIMUM CLEARANCE OF 24" TO BE MAINTAINED AROUND DEVICE FOR TESTING.
- ENTIRE ASSEMBLY TO BE PAINTED SAFETY BLUE.
- CONCRETE SLAB TO EXTEND 12" MIN. AROUND ENTIRE DEVICE.
- DEVICE MUST BE LISTED WITH THE UNIVERSITY OF SOUTHERN CALIFORNIA FOUNDATION FOR CROSS CONNECTION CONTROL AND HYDRAULIC RESEARCH.

CREATED 02/24/03
REVISED

REDUCED PRESSURE
BACKFLOW PREVENTER
(SINGLE SERVICE: 3/4", 1", 1-1/2", 2")

PROVIDED FOR INFORMATIONAL PURPOSES ONLY. NO MODIFICATIONS WITHOUT WRITTEN PCU APPROVAL

PASCO COUNTY UTILITIES — DETAIL 12

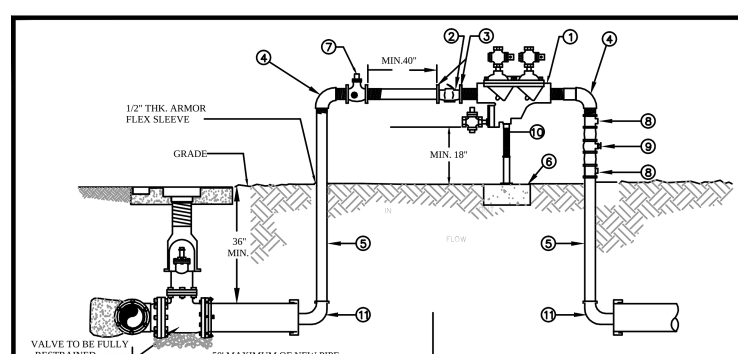

MATERIALS		
ITEM	QUANT.	DESCRIPTION
1	1	2" BACKFLOW PREVENTER ASSEMBLY, REDUCED PRESSURE ZONE
2	1	2" METER FURNISHED BY PASCO COUNTY UTILITIES
3	2	BRASS-METER FLANGES OR ADAPTORS
4	2	2" ELBOWS – GALV. 90°
5	2	2" RISER – GALV.
6	*	CONCRETE SLAB
7	1	2" VALVE – BRASS OR S.S.
8	2	TEE/ VALVES – BRASS OR S.S.
9	1	2" GATE VALVE – BRASS OR S.S.
10	1	PIPE STAND (SUPPORT)
11	2	M.J. CAP WITH 2" TAP

NOTE: - CONTRACTOR/CUSTOMER SHALL APPLY AT PASCO COUNTY UTILITIES CUSTOMER SERVICE FOR TEMPORARY WATER SERVICE AT LEAST THREE DAYS PRIOR TO REQUIRED SERVICE DATE.
- THE METER WILL BE FURNISHED, INSTALLED AND INITIAL READING TAKEN BY PASCO COUNTY UTILITIES. ALL FITTINGS, PIPING, VALVES AND MATERIALS INCLUDING THE PASCO COUNTY APPROVED REDUCED PRESSURE BACKFLOW PREVENTION DEVICE SHALL BE FURNISHED AND INSTALLED BY THE CONTRACTOR/CUSTOMER.
- CONTRACTOR/CUSTOMER FURNISHED REDUCED PRESSURE BACKFLOW PREVENTION DEVICE MUST BE INSTALLED BEFORE THE METER IS INSTALLED BY PASCO COUNTY UTILITIES. THE APPROVED BACKFLOW PREVENTION DEVICE SHALL BE TESTED AND CERTIFIED BY PASCO COUNTY UTILITIES CERTIFIED BACKFLOW PREVENTION TECHNICIAN AT TIME OF METER INSTALLATION.
- CONTRACTOR/CUSTOMER SHALL PROTECT THE JUMPER/METER ASSEMBLY FROM DAMAGE.
- CONTRACTOR/CUSTOMER IS RESPONSIBLE FOR BACTERIOLOGICAL TESTING AFTER CONNECTION OF TEMPORARY WATER SERVICE.
- TEMPORARY CONSTRUCTION JUMPER/METER ASSEMBLY SHALL NOT BE REMOVED UNTIL SYSTEM IS ACCEPTED AND DEPARTMENT OF HEALTH CERTIFICATION AND CLEARANCE FOR SERVICE FORM HAS BEEN RECEIVED BY PASCO COUNTY UTILITIES.
- WHEN THE NEW SYSTEM IS ACCEPTED AND THE FINAL METER READING TAKEN BY PASCO COUNTY, THE TEMPORARY CONSTRUCTION JUMPER/METER ASSEMBLY MUST BE COMPLETELY REMOVED FROM M.J CAP TO M.J. CAP AND A NEW WATER MAIN IS TO BE CHLORINATED AND INSTALLED COMPLETING THE FINAL CONNECTION.
- BY APPLYING FOR SERVICE, CONTRACTOR/CUSTOMER AGREES TO TAKE WATER SERVICE FROM PASCO COUNTY UTILITIES IN ACCORDANCE WITH THE APPROPRIATE RATE SCHEDULE AND IN ACCORDANCE WITH PASCO COUNTY UTILITIES RULES AND REGULATION.

CREATED 11/18/05
REVISED 05/30/06

TEMPORARY CONSTRUCTION WATER SERVICE

PROVIDED FOR INFORMATIONAL PURPOSES ONLY. NO MODIFICATIONS WITHOUT WRITTEN PCU APPROVAL

PASCO COUNTY UTILITIES — DETAIL 01

REVISIONS

NO.	DATE	DESCRIPTION	BY
1.	02-02-15	Revisions Per County Comments	ELR
2.	03-03-15	SWFWMD Resubmittal	ELR
3.	03-08-15	Access connection and Sidewalk	JAC
4.	08-07-15	County Resubmittal	ELR
5.	09-22-15	County Resubmittal - Address Comments Mod 1	ELR
6.			
7.			
8.			
9.			

Engineering ~ Planning
Environmental Science
4260 West Linebaugh Avenue
Tampa, Florida 33624
Phone: 813.265.3130 Fax: 813.265.6610
www.wraengineering.com CA 00007652

DRAWING
WATER AND SEWER DETAILS
DESIGNED: JAC DRAWN: ELR APPROVED: JAC

PROJECT
CYPRESS CREEK
TOWN CENTER NORTH
JOB #: 0967 DATUM: NGVD 1929

JOSEPH A. CIMINO
FL P.E. # 67540

Original Date: 07-14-14
Sheet
C-507

2012 Water Resource Associates, Inc. Plot Date: 9/23/2015 11:57:11 AM CAD File Name: S:\~PROJECT FILES\0967 - PASCO 54 INC. - CCTC NORTH\CADD\PLANS\C-504_WATER_SEWER_DETAILS.DWG

MANUFACTURER-SPECIFIC INFORMATION

TECHNICAL SALES CORPORATION

4621 N. HALE AVENUE
TAMPA, FL 33614
813 876-9256 FAX 813 874-1194

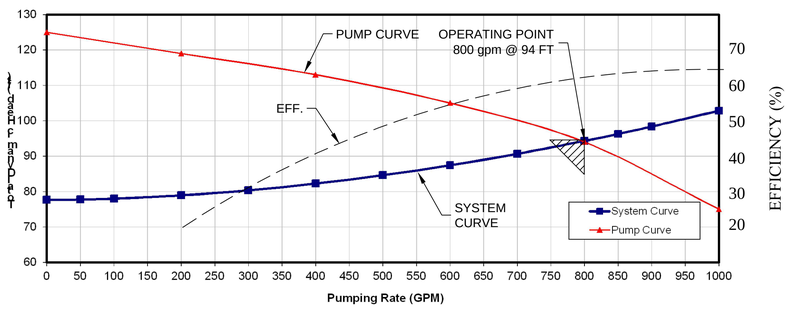

PUMP STATION DATA:

1. ADDRESS TBD
2. POWER CO. METER NO. TBD
3. POWER CO. POLE/PAD NO. TBD

5. DESIGN CAPACITY 800 GPM
6. WET WELL DIAMETER 8 FT. DIA.
7. CONTROL ELEVATIONS: SEE DETAIL THIS SHEET
8. STATIC HEAD 31.64 FT.
9. PUMP MODEL EBARA 150DLF637
10. PUMP SERIAL NO.
11. PUMP DESIGN POINT 800 GPM @ 94 TDH
12. PUMP H.P. 50 PHASE 3
13. PUMP IMP. NO./DIA. 199/297 mm
14. PUMP VOLTS AMPS
15. PUMP SPEED 1800 RPM
16. SOLIDS PASSING 3 IN
17. DISCHARGE 6 IN

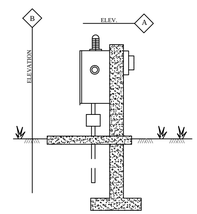

PANEL BOX ELEVATION

NOT TO SCALE

NOTE:
POSITION PANEL BOX SO OPERATOR'S BACK IS NOT TO WET WELL WHILE FACING BOX

PANEL BOX TO BE LOCATED TO ALLOW UNOBSTRUCTED ACCESS TO WET WELL BY PAVED ACCESS ROAD

PANEL ELEVATION SHALL BE ABOVE 100-YEAR FLOOD ELEV. AND MUST BE SHOWN ON ALL PLANS

DUPLEXOR SHALL BE AN T.T.I. 6012 MPE DUPLEX CONTROLLER

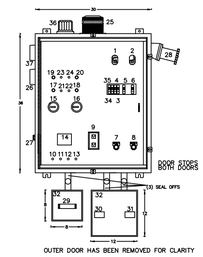

1 – MAIN BREAKER
2 – EMERGENCY RECEPTACLE BREAKER
3 – CONTROL BREAKER
4 – MB1 MOTOR BREAKER 1
5 – MB2 MOTOR BREAKER 2
6 – OVERLOAD 1 RESET
7 – OVERLOAD 2 RESET
8 – DUPLEX RECEPTACLE (GFI)
9 – FTS1 FLOAT TEST SWITCH 1
10 – FTS2 FLOAT TEST SWITCH 2
11 – FTS3 FLOAT TEST SWITCH 3
12 – FTS4 FLOAT TEST SWITCH 4
13 – DUPLEXOR – (SEE NOTE BELOW)
14 – ELAPSE TIME METER 1
15 – ELAPSE TIME METER 2
16 – PL1 OVERTEMP 1
17 – PL2 OVERTEMP 2
18 – PL3 MOISTURE 1
19 – PL4 MOISTURE 2
20 – OVERTEMP 1 TEST BUTTON
21 – OVERTEMP 2 TEST BUTTON
22 – MOISTURE 1 TEST BUTTON
23 – MOISTURE 2 TEST BUTTON
24 – AL ALARM LIGHT (DC)
25 – AL ALARM LIGHT (DC)
26 – AH ALARM HORN (DC)
27 – ASB ALARM SILENCE BUTTON
28 – GR GENERATOR RECEPTACLE
29 – FLOAT TERMINAL STRIP
30 – PUMP 1 POWER TERMINAL BLOCK
31 – PUMP 2 POWER TERMINAL BLOCK
32 – (2) JUNCTION BOXES
33 – LA LIGHTNING ARRESTOR
34 – SPARE CIRCUIT BREAKER
35 – ACB DC ALARM CIRCUIT BREAKER
36 – AL ALARM LIGHT (AC)
37 – ALARM HORN (AC)

PANEL BOX COMPONENT LAY-OUT

NOT TO SCALE

NOTE:
BREAKER, MODULAR CONTROL UNIT & RESETS MOUNTED FOR OPERATION THROUGH INNER SAFETY DOOR.

HOUR METERS G.F.I. RECEPTACLE TO BE MOUNTED ON INNER SAFETY DOOR.

SEE TECHNICAL SPECIFICATION FOR DETAILS.

SEE NOTE NO. 12 FOR INFORMATION PERTAINING TO BATTERY BACK-UP FOR ALARM

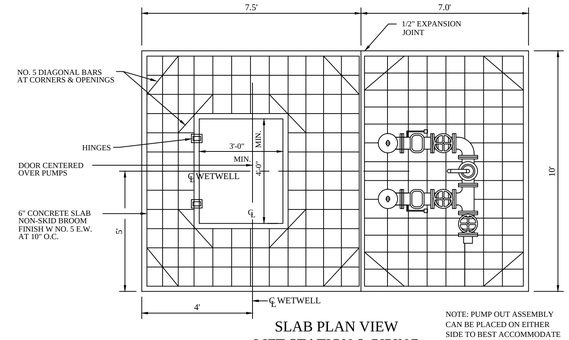

SLAB PLAN VIEW
LIFT STATION & PIPING

NOT TO SCALE

NOTE: PUMP OUT ASSEMBLY CAN BE PLACED ON EITHER SIDE TO BEST ACCOMMODATE PROPOSED LAYOUT

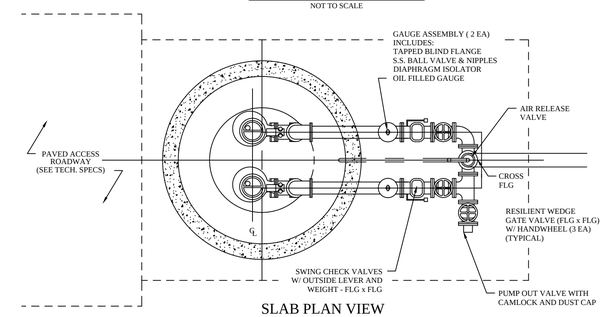

SLAB PLAN VIEW
LIFT STATION & PIPING

NOT TO SCALE

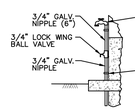

HOSE BIB DETAIL

NOT TO SCALE

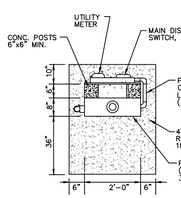

ELEVATION A

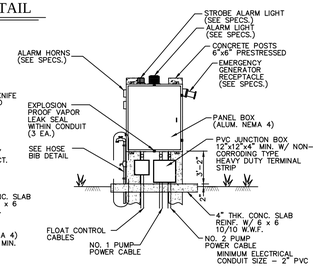

ELEVATION B

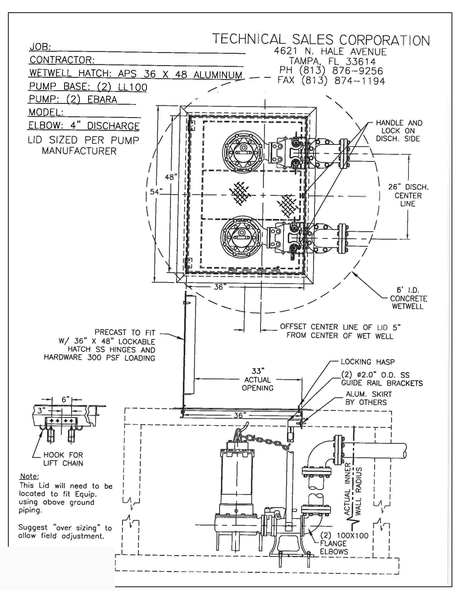

LIFT STATION NOTES

1. ALL CONSTRUCTION MATERIALS AND EQUIPMENT SHALL BE IN ACCORDANCE WITH PASCO COUNTY STANDARDS FOR DESIGN AND CONSTUCTION OF "WATER, WASTEWATER & RECLAIMED WATER FACILITIES, JUNE 1995 EDITION".
2. PUMP MANUFACTURER AND SPECIFICATIONS ARE SHOWN FOR REFERENCE ONLY. ANY LIFT STATION PACKAGE MEETING "FLORIDA DEPARTMENT OF ENVIRONMENTAL PROTECTION" REQUIREMENTS AND THE DESIGN CONDITIONS MAY BE SUBMITTED TO THE ENGINEER FOR APPROVAL.
3. ALL PUMPING STATION PIPING SHALL BE FLANGED CAST OR DUCTILE IRON PIPE UNLESS OTHERWISE NOTED.
4. ALL WALL OPENINGS IN PUMPING STATION FOR PIPES, ETC. SHALL BE THOROUGHLY GROUTED AND MADE WATERTIGHT.
5. THE CONTRACTOR SHALL PROVIDE A 3/4" WATER SERVICE, CURB STOP AND 3/4" HOSE BIBB TO POINT INDICATED ON PLANS, TOGETHER WITH A BACK FLOW PREVENTER.
6. THE CONTRACTOR SHALL INSURE THAT A NAME PLATE SHALL BE FURNISHED FOR EACH PUMP INDICATING THE CAPACITY, TDH, SPEED AND EFFICIENCY. PUMPS SHALL BE CAPABLE OF PASSING MINIMUM 3" SOLIDS.
7. INFLUENT PIPE CONNECTION TO WET WELL SHALL CONSIST OF AT LEAST ONE FULL LENGTH OF DUCTILE IRON PIPE AND EXTEND 4" INSIDE WETWELL.
8. PIPE FOR WATER SERVICE SHALL BE SCHEDULE 40 GALVINIZED STEEL PIPE.
9. THE CONTRACTOR SHALL SUBMIT SHOP DRAWINGS FOR APPROVAL PRIOR TO PURCHASING EQUIPMENT OR COMMENCING CONSTRUCTION.
10. FORCE MAIN TO HAVE 36" MINIMUM COVER.
11. ASPHALT DRIVE TO LIFT STATION SHALL CONSIST OF 9" COMPACTED SUBGRADE (98% T-180), 6" SOIL CEMENT (300 PSI) AND 1" OF TYPE S ASPHALT.
12. CONTRACTOR SHALL PROVIDE AND INSTALL A BATTERY BACK-UP SYSTEM FOR THE PUMP STATION ALARM CONTRACTOR SHALL SUBMIT SHOP DRAWINGS TO THE ENGINEER FOR HIS APPROVAL AS WELL AS PASCO COUNTY APPROVAL.
13. WASTEWATER PUMP STATION START-UP TEST, WHETHER COUNTY-OWNED OR PRIVATELY-OWNED, MUST BE SCHEDULED THREE BUSINESS DAYS IN ADVANCE BY THE CONTRACTOR OR HIS REPRESENTATIVE BY CONTACTING GEORGEANN BENNETT, ENGINEERING RECORDS TECHNICIAN AT (727) 847-8145, EXTENSION 8621. THE PASCO COUNTY UTILITIES INSPECTOR AND OPERATION AND SEWER MAINTENANCE STAFF MUST BE PRESENT AS PART OF THE FLORIDA DEPARTMENT OF ENVIRONMENTAL PROTECTION (FDEP) CERTIFICATION/CLEARANCE PROCESS.

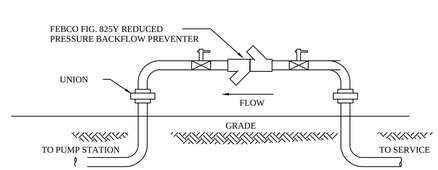

WATER SERVICE BACKFLOW PREVENTER

NOT TO SCALE

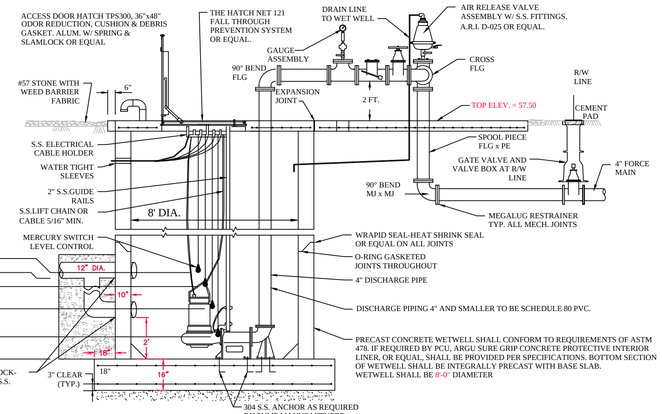

ELEVATION TYPICAL
LIFT STATION & PIPING

NOT TO SCALE

NOTES:

1. ALL PIPING WITHIN THE WETWELL (LARGER THAN 4") AND ALL ABOVE GROUND PIPING SHALL BE MANUFACTURED FLANGED PIPE. FIELD FABRICATED FLANGES (UNI-FLANGE OR MEGAFLANGE) WILL NOT BE PERMITTED.

2. ALL DUCTILE IRON PIPE AND FITTINGS SHALL BE PROVIDED WITH CERAMIC EPOXY INTERIOR LINING (PROTECTO 401). IN ADDITION, ALL PIPE & FITTINGS WITHIN THE WETWELL SHALL BE PROVIDED WITH POLYETHYLENE SHRINK WRAPPED EXTERIOR COATING.

3. ALL UNDERGROUND FITTINGS SHALL BE RESTRAINED MECHANICAL JOINT AND SHALL BE PROVIDED WITH PROTECTO 401 INTERIOR LINING.

4. IF LIFT CABLES ARE USED, LIFTING RINGS MUST BE PROVIDED EVERY 4 FT.

5. INDIVIDUAL WALL PENETRATION SLEEVES SHALL BE PROVIDED FOR EACH PUMP CABLE.

6. ALL HARDWARE (INCLUDING FLANGE BOLTS & NUTS) SHALL BE STAINLESS STEEL.

7. ALL ABOVE GROUND PIPING TO BE PAINTED SAFETY GREEN.

8. SLAB ELEVATION TO BE 12 IN. ABOVE C/L OF ROADWAY OR 12 IN. ABOVE 100 YEAR FLOOD PLAIN - WHICHEVER IS HIGHER.

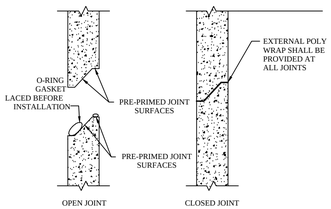

PRECAST JOINT DETAIL

NOT TO SCALE

REVISIONS

NO.	DATE	DESCRIPTION	BY
1.	02-02-15	Revisions Per County Comments	ELR
2.	03-03-15	SWFWMD Resubmittal	ELR
3.	03-24-15	County Resubmittal	ELR
4.	08-07-15	County Resubmittal - Proposed Sidewalk	ELR
5.	09-22-15	County Resubmittal - Address Comments Mod 1	ELR
6.			
7.			
8.			
9.			

Engineering ~ Planning
Environmental Science
4260 West Linebaugh Avenue
Tampa, Florida 33624
Phone: 813.265.3130 Fax: 813.265.6610
www.wraengineering.com CA 00007652

DRAWING: LIFT STATION DETAILS

DESIGNED: JAC DRAWN: ELR APPROVED: JAC

PROJECT: CYPRESS CREEK TOWN CENTER NORTH

JOB #: 0967 DATUM: NGVD 1929

JOSEPH A. CIMINO
FL P.E. # 67540

Original Date: 07-14-14

Sheet

C-508

2012 Water Resource Associates, Inc. Plot Date: 9/23/2015 11:57:23 AM CAD File Name: S:\-PROJECT FILES\0967 - PASCO 54 INC. - CCTC NORTH\CADD\PLANS\C-507_LIFT_STATION_DETAILS.DWG

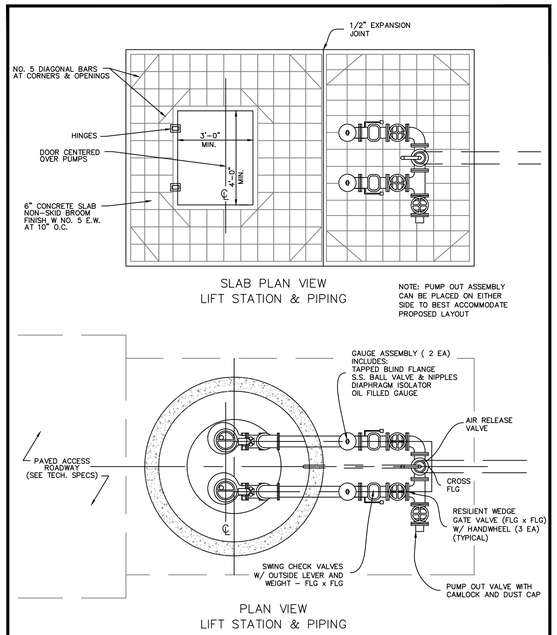

CREATED 02/24/03 REVISED	PUMP STATION SLAB & PIPING PLAN	PROVIDED FOR INFORMATIONAL PURPOSES ONLY. NO MODIFICATIONS WITHOUT WRITTEN PCU APPROVAL
	PASCO COUNTY UTILITIES	DETAIL 48

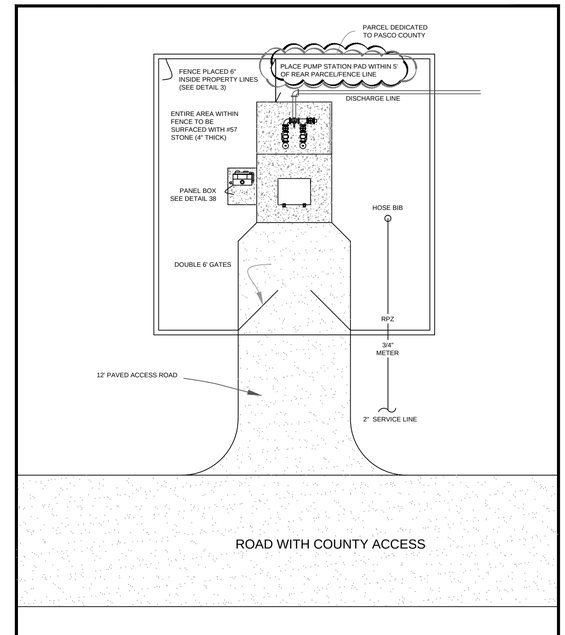

CREATED 02/24/03 REVISED	PUMP STATION (DUPLEX) SITE PLAN & ACCESS	PROVIDED FOR INFORMATIONAL PURPOSES ONLY. NO MODIFICATIONS WITHOUT WRITTEN PCU APPROVAL
	PASCO COUNTY UTILITIES	DETAIL 47

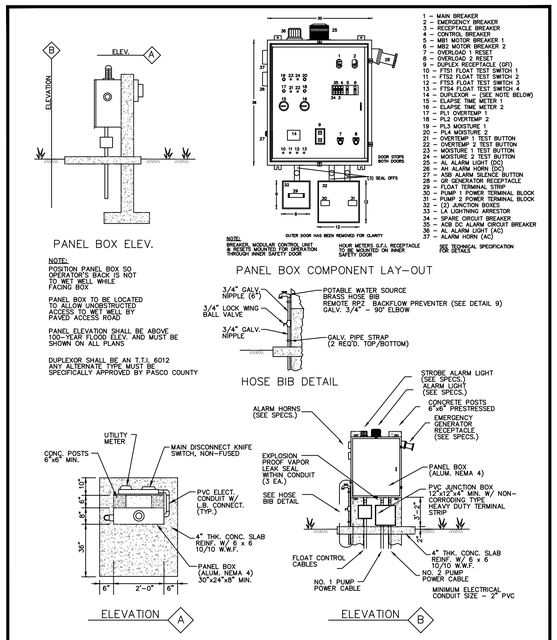

CREATED 02/24/03 REVISED	STANDARD PUMP STATION (DUPLEX) PANEL BOX ELEVATION & COMPONENT LAY-OUT	PROVIDED FOR INFORMATIONAL PURPOSES ONLY. NO MODIFICATIONS WITHOUT WRITTEN PCU APPROVAL
	PASCO COUNTY UTILITIES	DETAIL 50

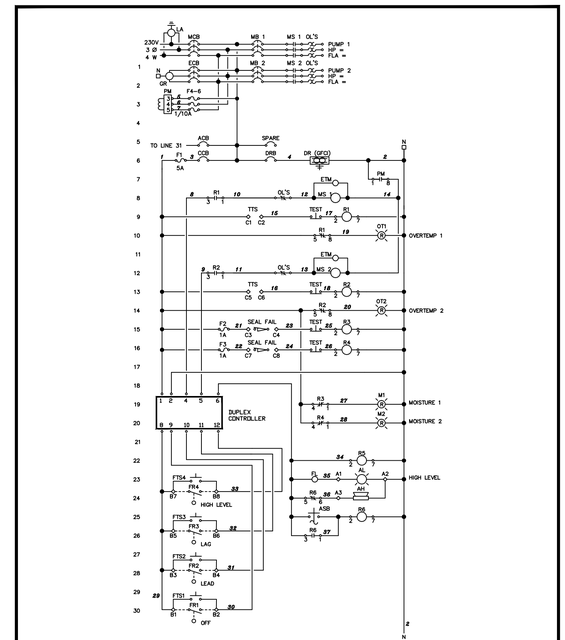

CREATED 02/24/03 REVISED	STANDARD PUMP STATION WIRING DIAGRAM (1 OF 2)	PROVIDED FOR INFORMATIONAL PURPOSES ONLY. NO MODIFICATIONS WITHOUT WRITTEN PCU APPROVAL
	PASCO COUNTY UTILITIES	DETAIL 51

REVISIONS

NO.	DATE	DESCRIPTION	BY
1.	02-02-15	Revisions Per County Comments	E.L.R.
2.	03-03-15	SWFWMD Resubmittal	E.L.R.
3.	06-04-15	Access connection and Sidewalk	E.L.R.
4.	08-07-15	County Resubmittal	E.L.R.
5.	09-22-15	County Resubmittal - Address Comments Mod 1	E.L.R.
6.			
7.			
8.			
9.			

Engineering ~ Planning
Environmental Science
4260 West Linebaugh Avenue
Tampa, Florida 33624
Phone: 813.265.3130 Fax: 813.265.6610
www.wraengineering.com CA 00007652

DRAWING
LIFT STATION DETAILS
DESIGNED:JAC DRAWN:ELR APPROVED:JAC

PROJECT
CYPRESS CREEK
TOWN CENTER NORTH
JOB #: 0962 DATUM: NGVD 1929

JOSEPH A. CIMINO
FL P.E. # 67540

Original Date: 07-14-14
Sheet
C-509

2012 Water Resource Associates, Inc. Plot Date: 9/23/2015 11:57:29 AM CAD File Name: S:\~PROJECT FILES\0967 - PASCO 54 INC. - CCTC NORTH\CADD\PLANS\C-507_LIFT_STATION_DETAILS.DWG

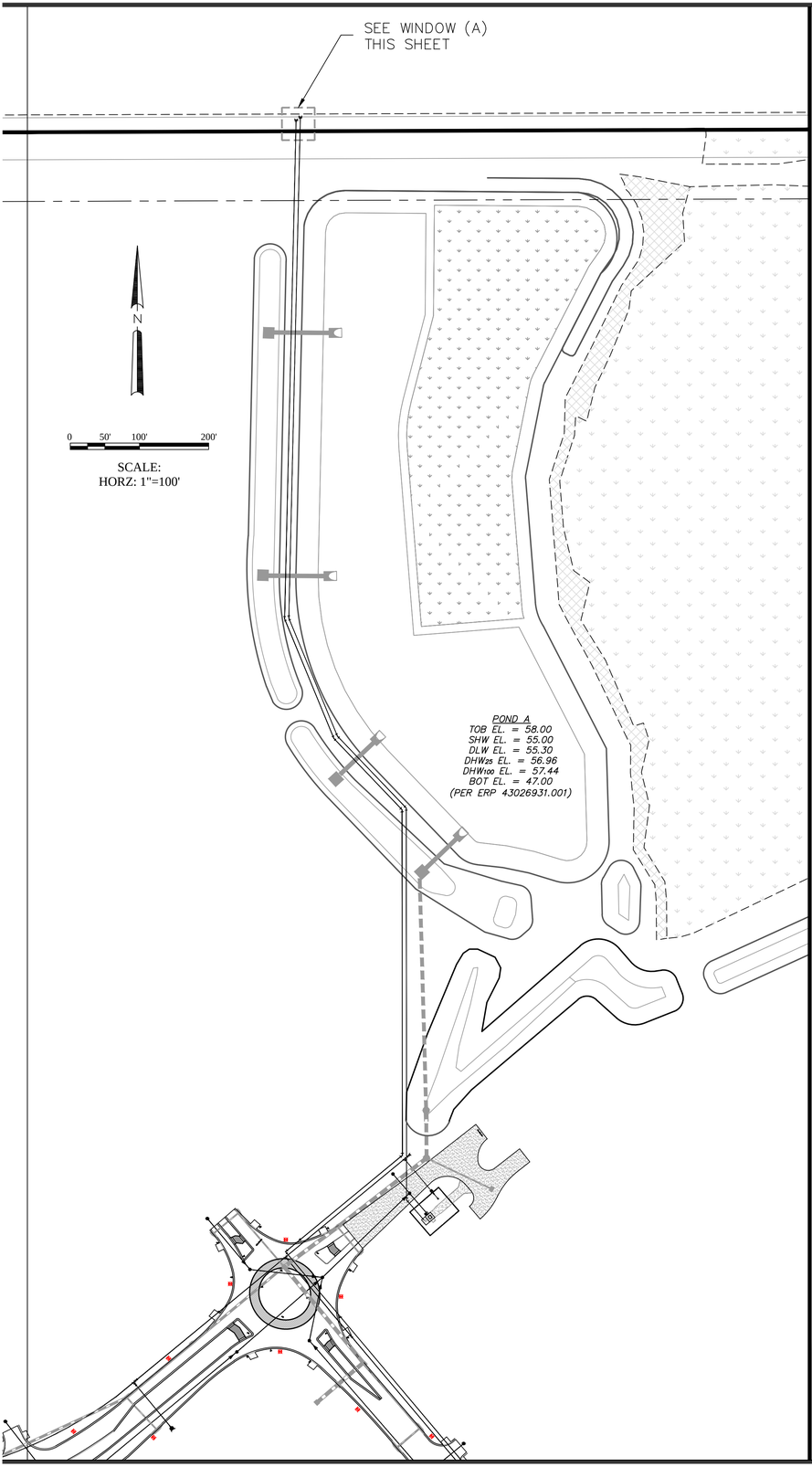

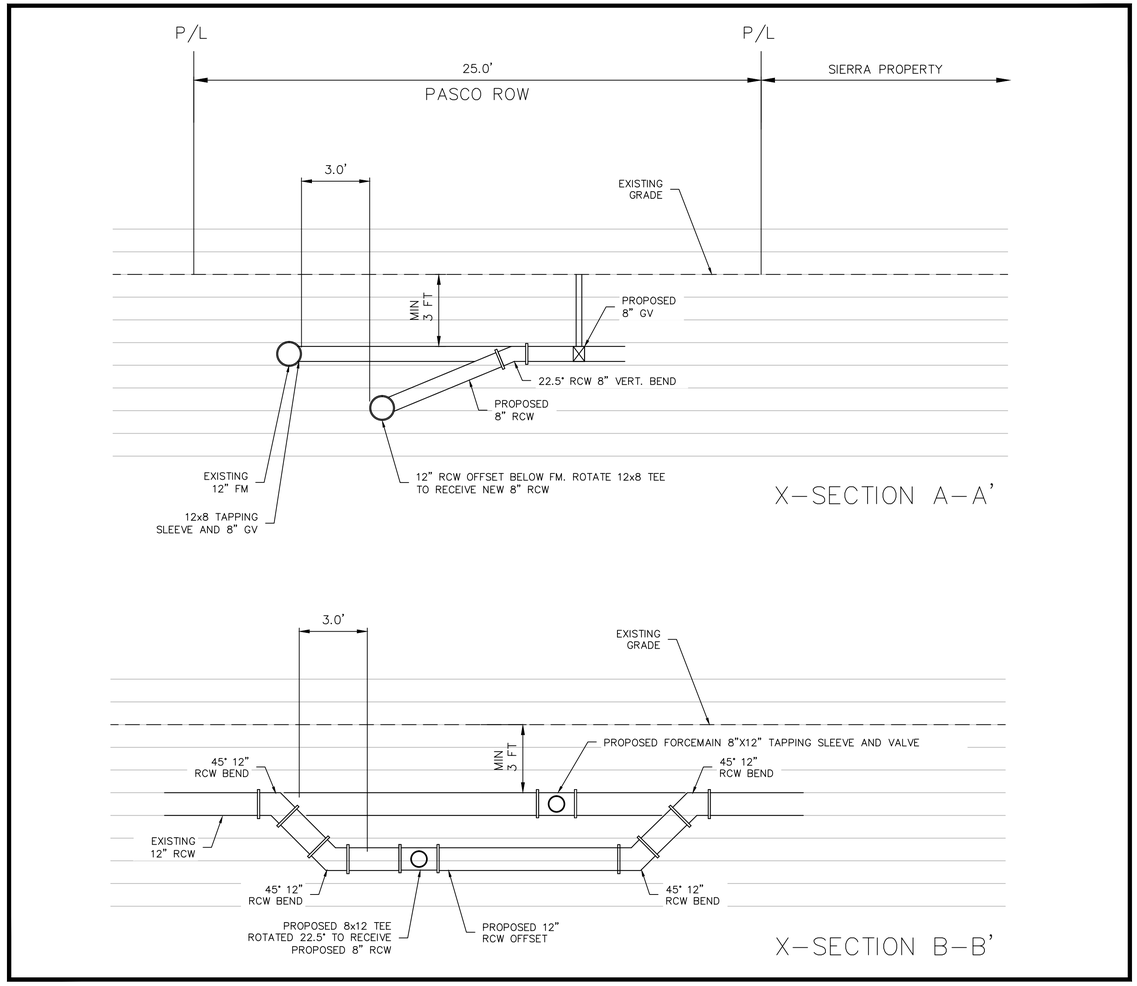

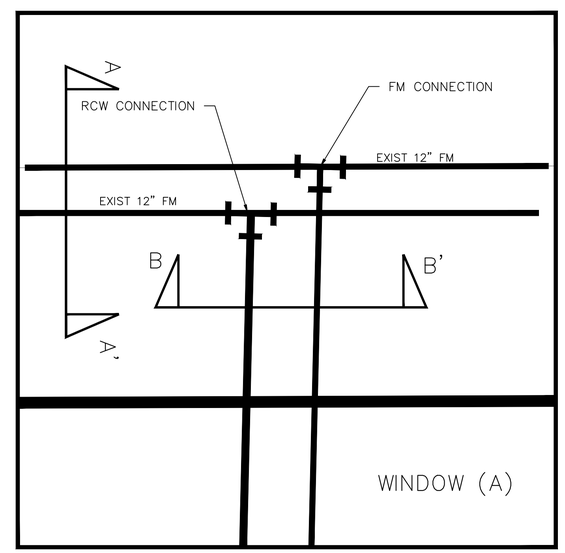

REVISIONS

NO.	DATE	DESCRIPTION	BY
1.	02-02-15	Revisions Per County Comments	ELR
2.	03-03-15	SWFWMD Resubmittal	ELR
3.	03-08-15	Access connection and Sidewalk	JAC
4.	08-07-15	County Resubmittal	ELR
5.	09-22-15	County Resubmittal - Address Comments Mod 1	ELR
6.			
7.			
8.			
9.			

05-06-14 Revisions per Pasco County Comments JAC
05-20-14 Revisions per Pasco County Utility Comments JAC

Engineering ~ Planning
Environmental Science
4260 West Linebaugh Avenue
Tampa, Florida 33624
Phone: 813.265.3130 Fax: 813.265.6610
www.wraengineering.com CA 00007652

DRAWING
NORTH UTILITY CONNECTIONS
DESIGNED: JAC DRAWN: ELR APPROVED: JAC

PROJECT
CYPRESS CREEK TOWN CENTER NORTH
JOB #: 19867 DATUM: NGVD 1929

JOSEPH A. CIMINO
FL P.E. # 67540

Original Date: 07-14-14
Sheet
C-510

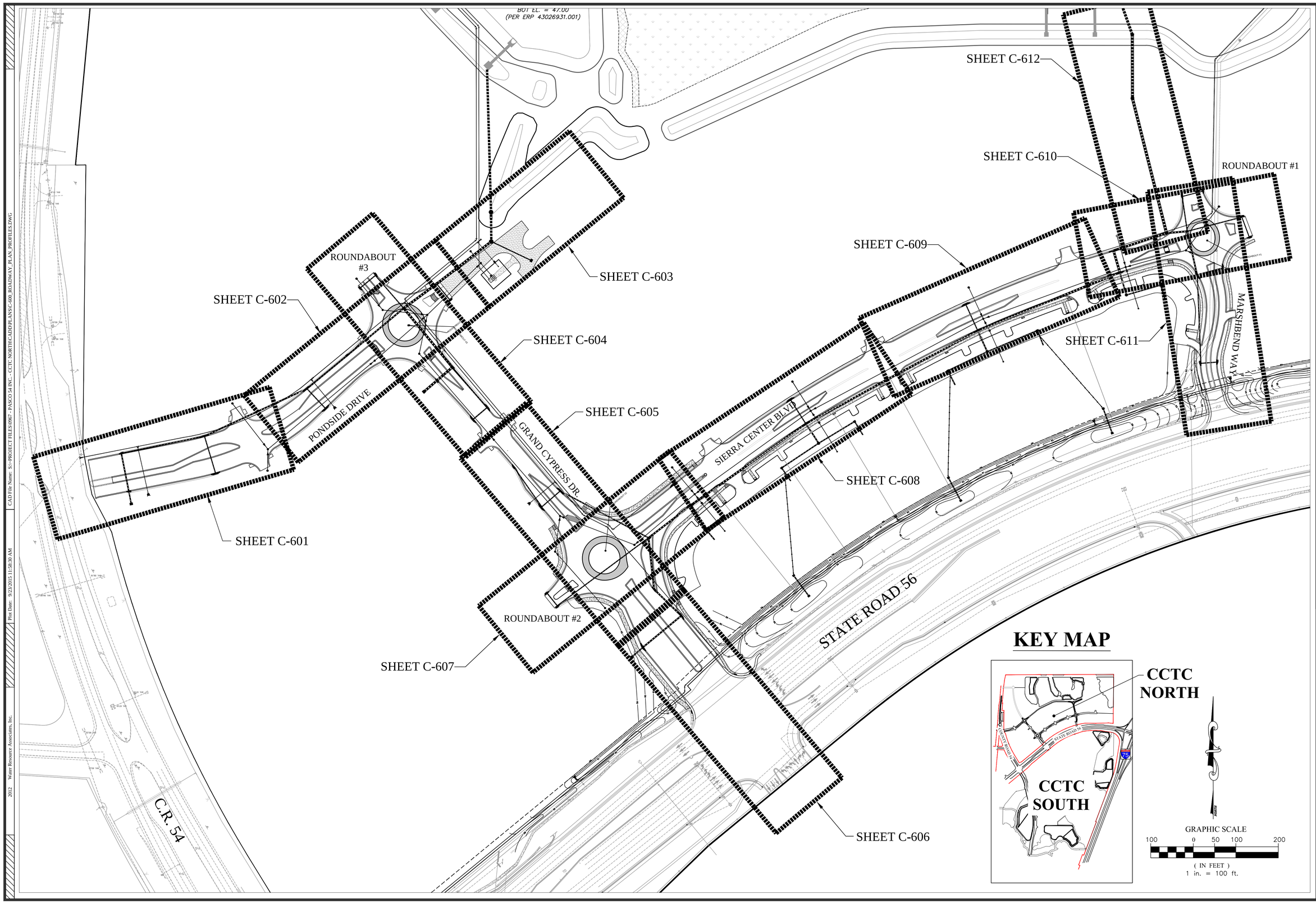

2012 Water Resource Associates, Inc. Plot Date: 9/23/2015 11:58:30 AM CAD File Name: S:\~PROJECT FILES\0967 - PASCO 54 INC. - CCTC NORTH\CADD\PLANS\C-600_ROADWAY_PLAN_PROFILES.DWG

REVISIONS

NO.	DATE	DESCRIPTION	BY
1.	02-02-15	Revisions Per County Comments	ELR
2.	03-03-15	SWFWMD Resubmittal	ELR
3.	06-05-15	Access connection and Sidewalk	ELR
4.	08-07-15	County Resubmittal	ELR
5.	09-22-15	County Resubmittal - Address Comments Mod 1	ELR
6.			
7.			
8.			
9.			

Engineering ~ Planning
Environmental Science
4260 West Linebaugh Avenue
Tampa, Florida 33624
Phone: 813.265.3130 Fax: 813.265.6610
www.wraengineering.com CA 00007652

DRAWING
ROADWAY PLAN & PROFILES KEY MAP
DESIGNED: JAC DRAWN: ELR APPROVED: JAC

PROJECT
CYPRESS CREEK TOWN CENTER NORTH
JOB #: 0967 DATUM: NGVD 1929

JOSEPH A. CIMINO
FL P.E. # 67540

Original Date: 07-14-14
Sheet
C-600

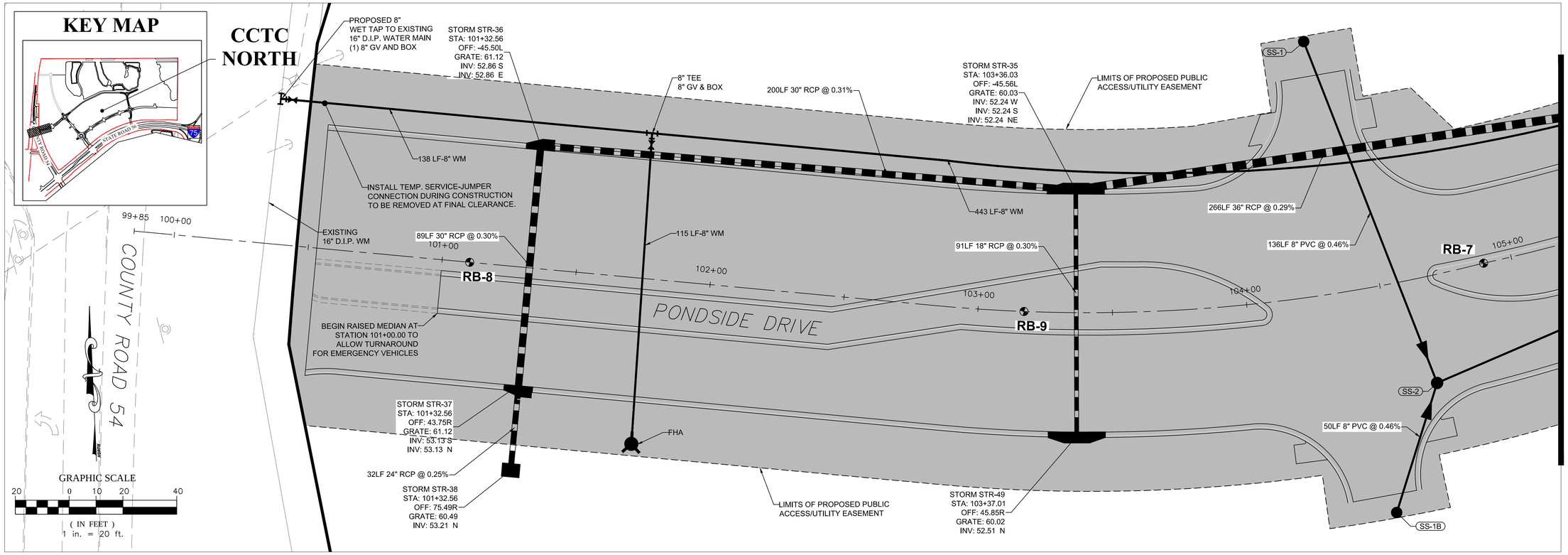

MATCHLINE - SEE SHEET C-602

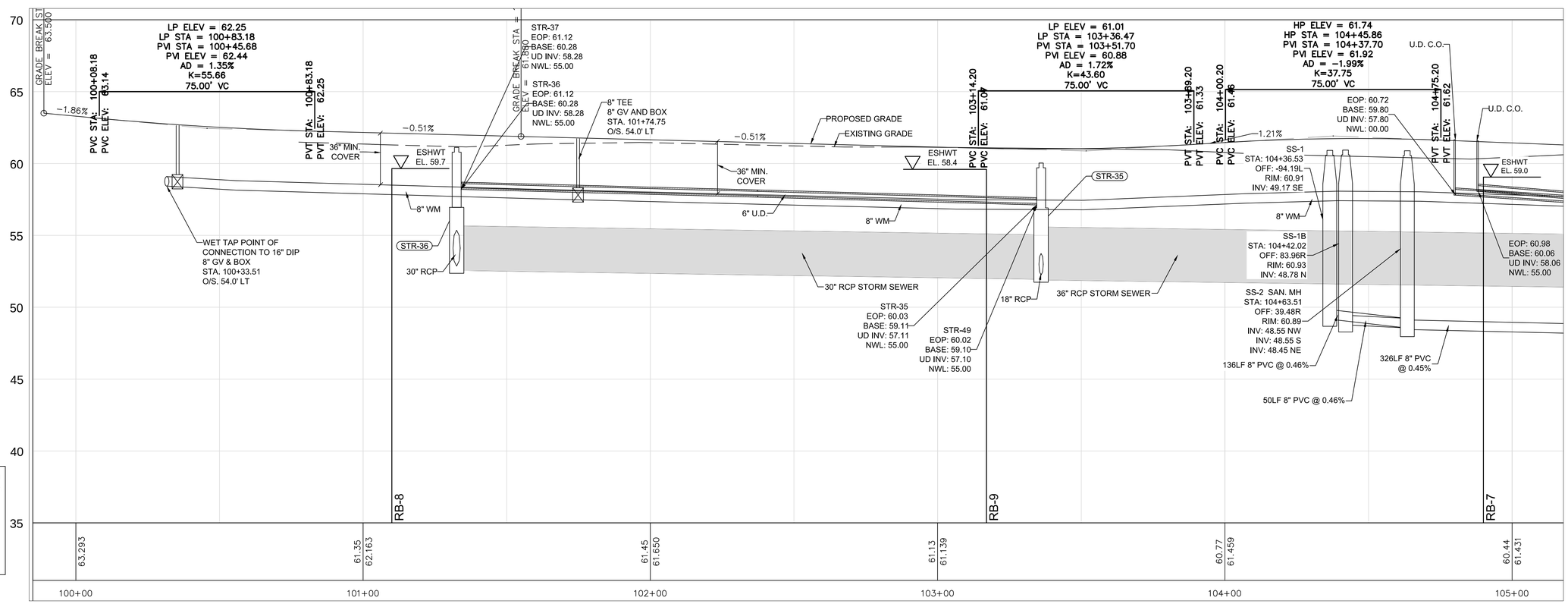

PONDSIDE DRIVE
1" = 20' HORIZ.
1" = 5' VERT.

NO.	DATE	DESCRIPTION	BY
1.	02-02-15	Revisions Per County Comments	ELR
2.	03-03-15	SWFWMD Resubmittal	ELR
3.	06-04-15	Accommodate Sidewalk	ELR
4.	08-07-15	County Resubmittal	ELR
5.	09-22-15	County Resubmittal - Address Comments Mod 1	ELR
6.			
7.			
8.			
9.			

REVISIONS

Engineering ~ Planning
Environmental Science
4260 West Linebaugh Avenue
Tampa, Florida 33624
Phone: 813.265.3130 Fax: 813.265.6610
www.wraengineering.com CA 00007652

DRAWING: ROADWAY PLAN AND PROFILES

DESIGNED: JAC DRAWN: ELR APPROVED: JAC

PROJECT: CYPRESS CREEK TOWN CENTER NORTH

JOB #: 0962 DATUM: NGVD 1929

JOSEPH A. CIMINO
FL P.E. # 67540

Original Date: 07-14-14

Sheet

C-601

2012 Water Resource Associates, Inc. Plot Date: 9/23/2015 11:38:40 AM CAD File Name: S:\-PROJECT FILES\0967 - PASCO 54 INC. - CCTC NORTH\CADD\PLANS\C-600_ROADWAY - PLAN - PROFILES.DWG

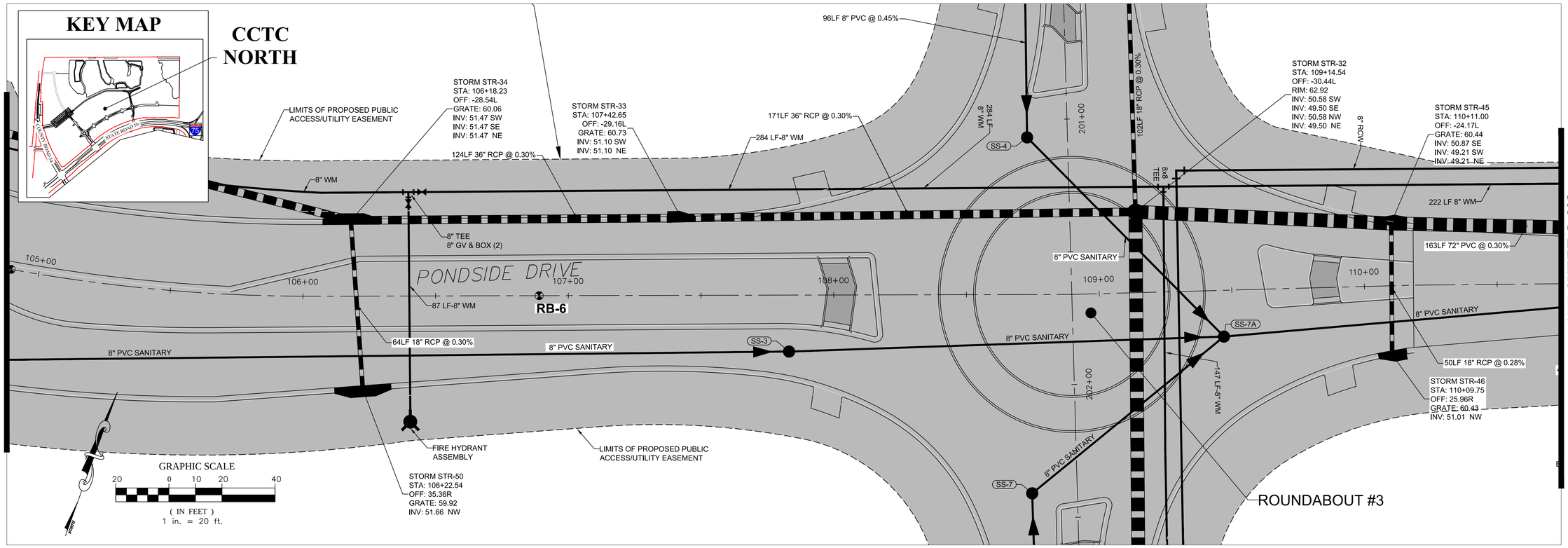

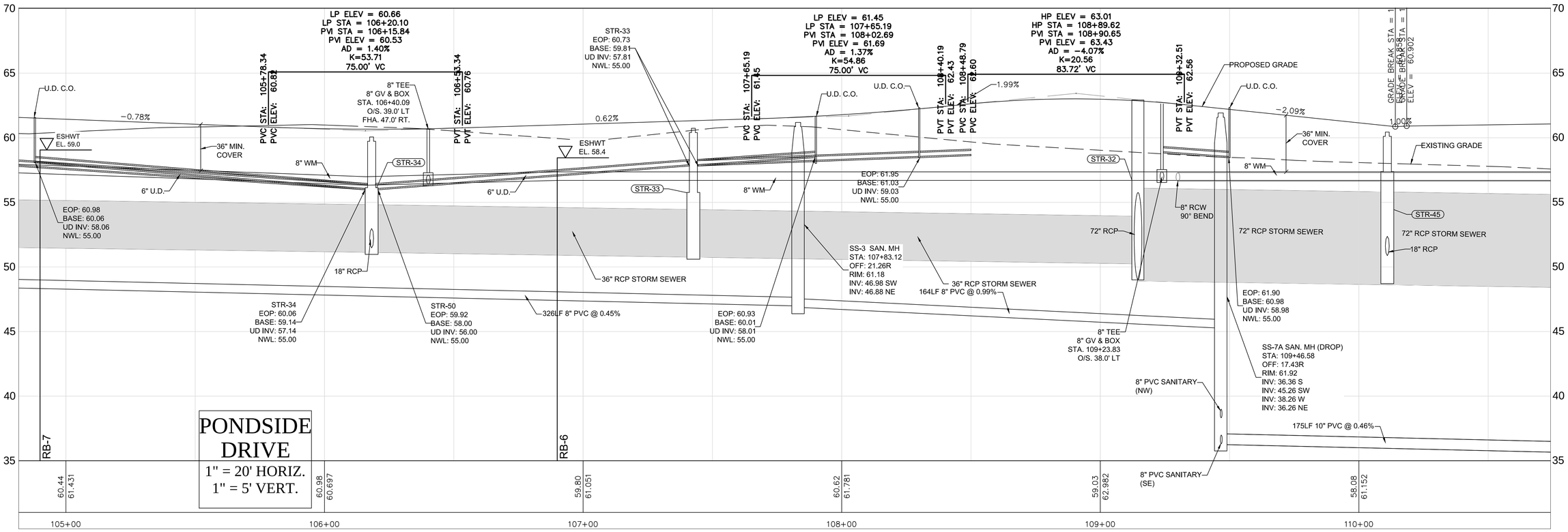

REVISIONS

NO.	DATE	DESCRIPTION	BY
1.	02-02-15	Revisions Per County Comments	ELR
2.	03-03-15	SWFWMD Resubmittal	ELR
3.	03-04-15	Revisions Per Sidewalk	ELR
4.	08-07-15	County Resubmittal	ELR
5.	09-22-15	County Resubmittal - Address Comments Mod 1	ELR
6.			
7.			
8.			
9.			

Engineering ~ Planning
Environmental Science
4260 West Linebaugh Avenue
Tampa, Florida 33624
Phone: 813.265.3130 Fax: 813.265.6610
www.wraengineering.com CA 00007652

DRAWING

ROADWAY PLAN AND PROFILES

DESIGNED: JAC DRAWN: ELR APPROVED: JAC

PROJECT

CYPRESS CREEK TOWN CENTER NORTH

JOB #: 0962 DATUM: NGVD 1929

JOSEPH A. CIMINO
FL P.E. # 67540

Original Date: 07-14-14

Sheet

C-602

CAD File Name: S:\~PROJECT FILES\0967 - PASCO 54 INC. - CCTC NORTH\CADD\PLANS\C-600_ROADWAY_PLAN_PROFILES.DWG
Plot Date: 9/22/2015 11:58:51 AM
2012 Water Resource Associates, Inc.

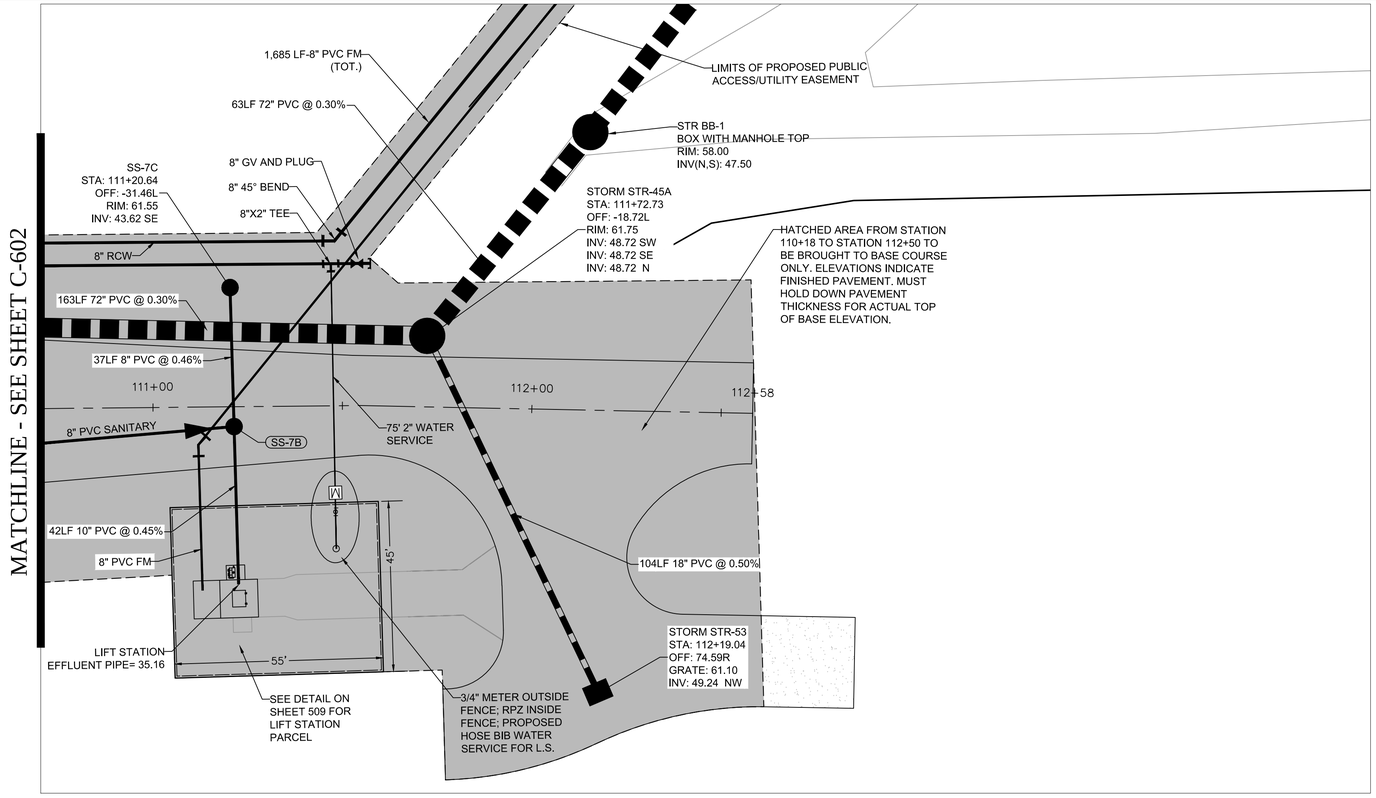

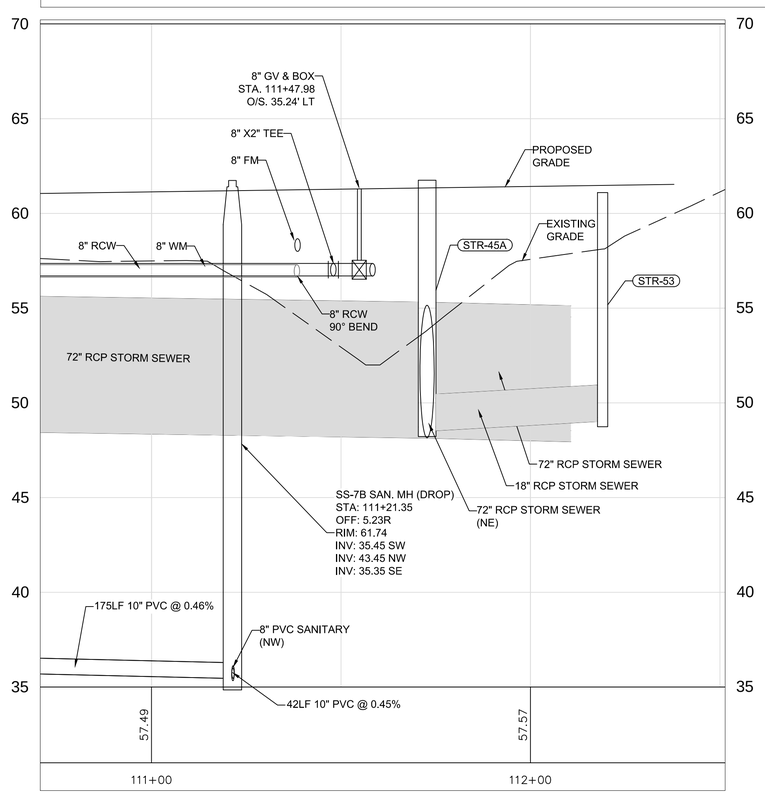

PONDSIDE DRIVE
1" = 20' HORIZ.
1" = 5' VERT.

KEY MAP

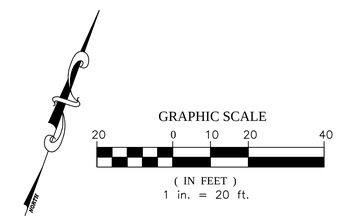

REVISIONS

NO.	DATE	DESCRIPTION	BY
1.	02-02-15	Revisions Per County Comments	ELR
2.	03-03-15	SWFWMD Resubmittal	ELR
3.	06-04-15	Access connection and Sidewalk	JAC
4.	08-07-15	County Resubmittal	ELR
5.	09-22-15	County Resubmittal - Address Comments Mod 1	ELR
6.			
7.			
8.			
9.			

Engineering ~ Planning
Environmental Science
4260 West Linebaugh Avenue
Tampa, Florida 33624
Phone: 813.265.3130 Fax: 813.265.6610
www.wraengineering.com CA 00007652

DRAWING
ROADWAY PLAN AND PROFILES
DESIGNED: JAC DRAWN: ELR APPROVED: JAC

PROJECT
CYPRESS CREEK TOWN CENTER NORTH
JOB #: 0962 DATUM: NGVD 1929

JOSEPH A. CIMINO
FL P.E. # 67540

Original Date: 07-14-14
Sheet
C-603

2012 Water Resource Associates, Inc. Plot Date: 9/23/2015 11:59:00 AM CAD File Name: S:\~PROJECT FILES\0967 - PASCO 54 INC. - CCTC NORTH\CADD\PLANS\C-600_ROADWAY - PLAN - PROFILES.DWG

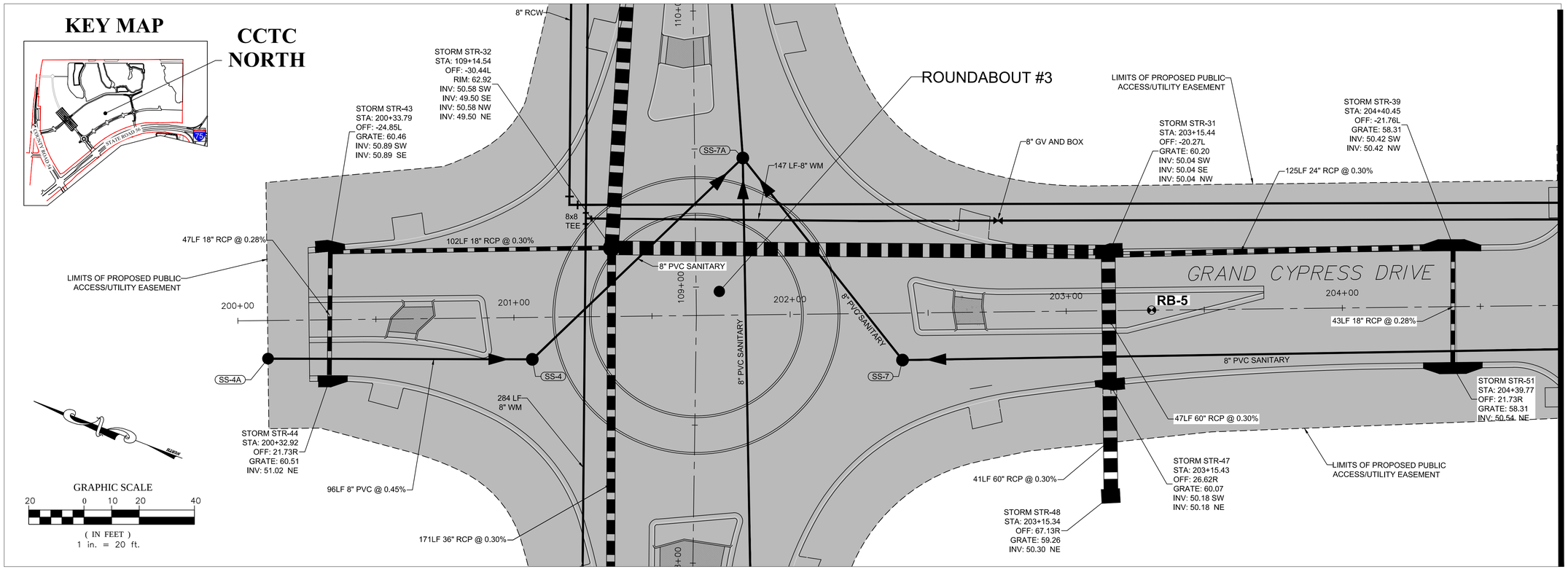

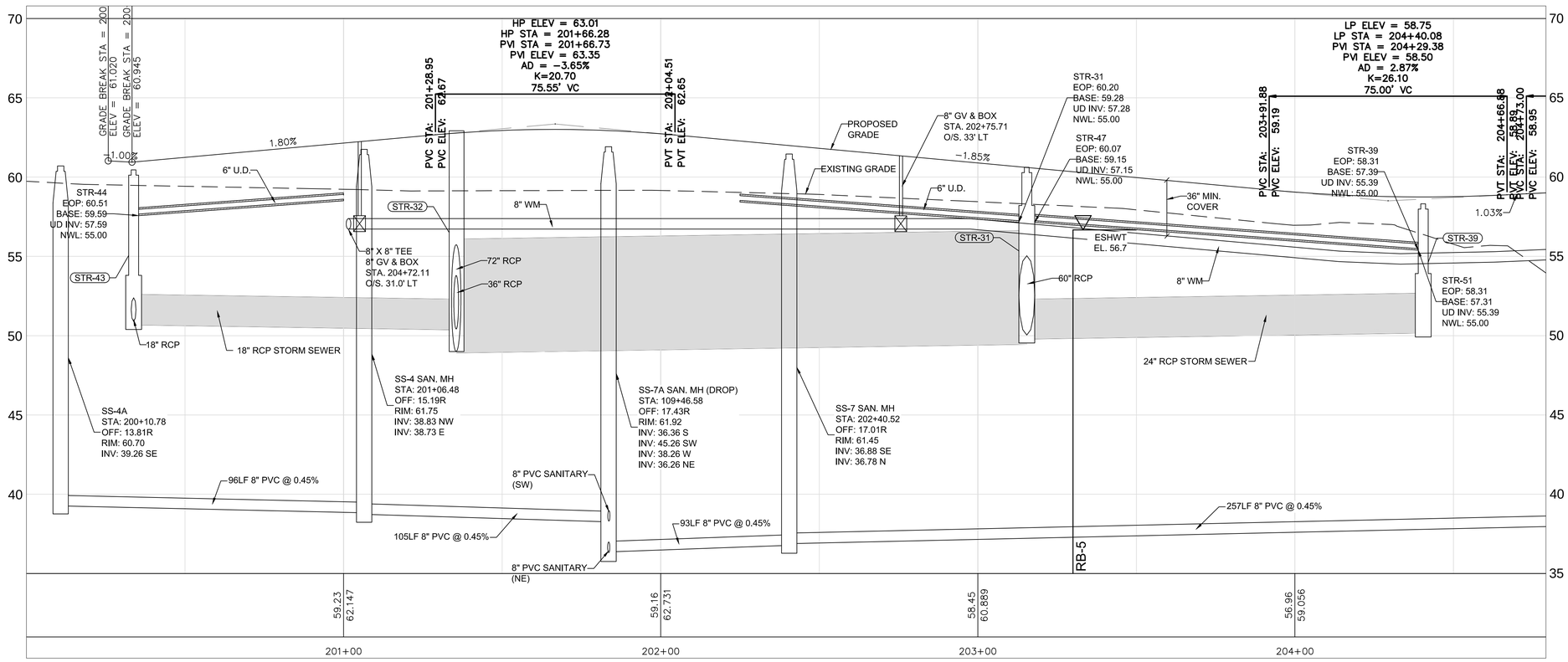

GRAND CYPRESS DRIVE
1" = 20' HORIZ.
1" = 5' VERT.

REVISIONS			
NO.	DATE	DESCRIPTION	BY
1.	02-02-15	Revisions Per County Comments	ELR
2.	03-03-15	SWFWMD Resubmittal	ELR
3.	03-04-15	Access comments and Sidewalk	ELR
4.	08-07-15	County Resubmittal	ELR
5.	09-22-15	County Resubmittal - Address Comments Mod 1	ELR
6.			
7.			
8.			
9.			

Engineering ~ Planning
Environmental Science
4260 West Linebaugh Avenue
Tampa, Florida 33624
Phone: 813.265.3130 Fax: 813.265.6610
www.wraengineering.com CA 00007652

DRAWING
ROADWAY PLAN AND PROFILES
DESIGNED: JAC DRAWN: ELR APPROVED: JAC

PROJECT
CYPRESS CREEK
TOWN CENTER NORTH
JOB #: 0962 DATUM: NGVD 1929

JOSEPH A. CIMINO
FL P.E. # 67540

Original Date: 07-14-14
Sheet
C-604

2012 Water Resource Associates, Inc. Plot Date: 9/23/2015 11:59:10 AM CAD File Name: S:\~PROJECT FILES\0967 - PASCO 54 INC. - CCTC NORTH\CADD\PLANS\C-600_ROADWAY - PLAN - PROFILES.DWG

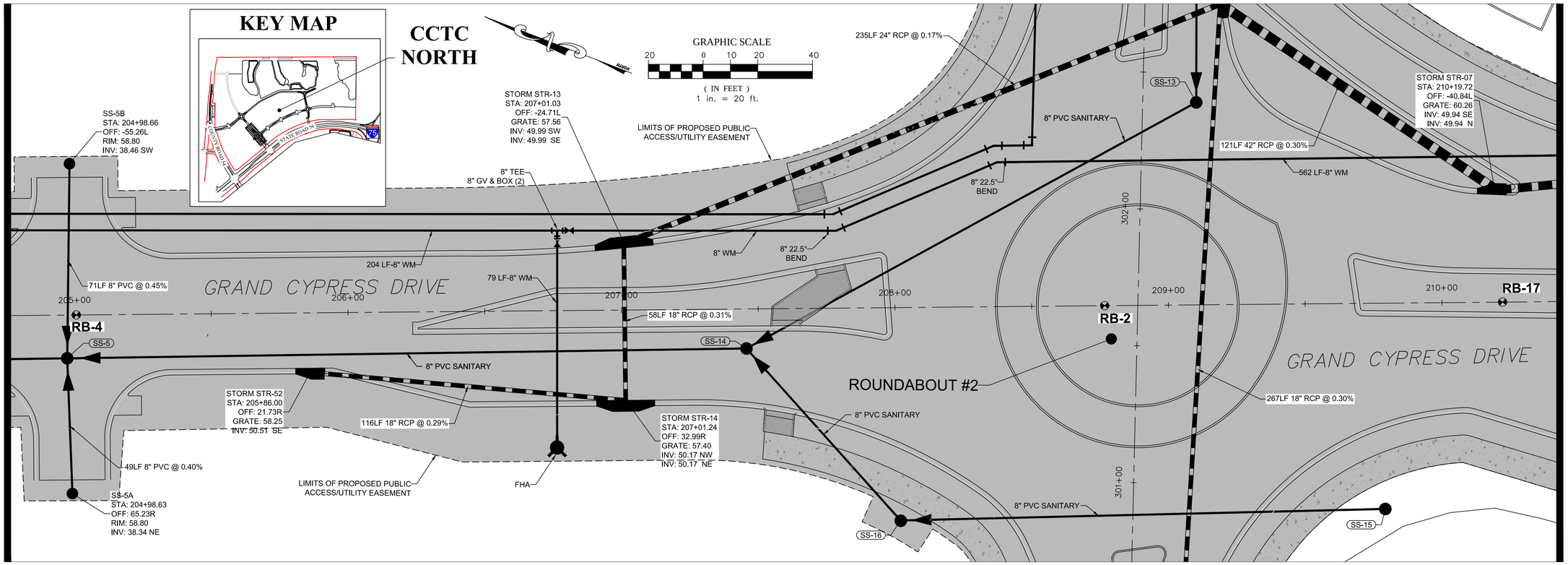

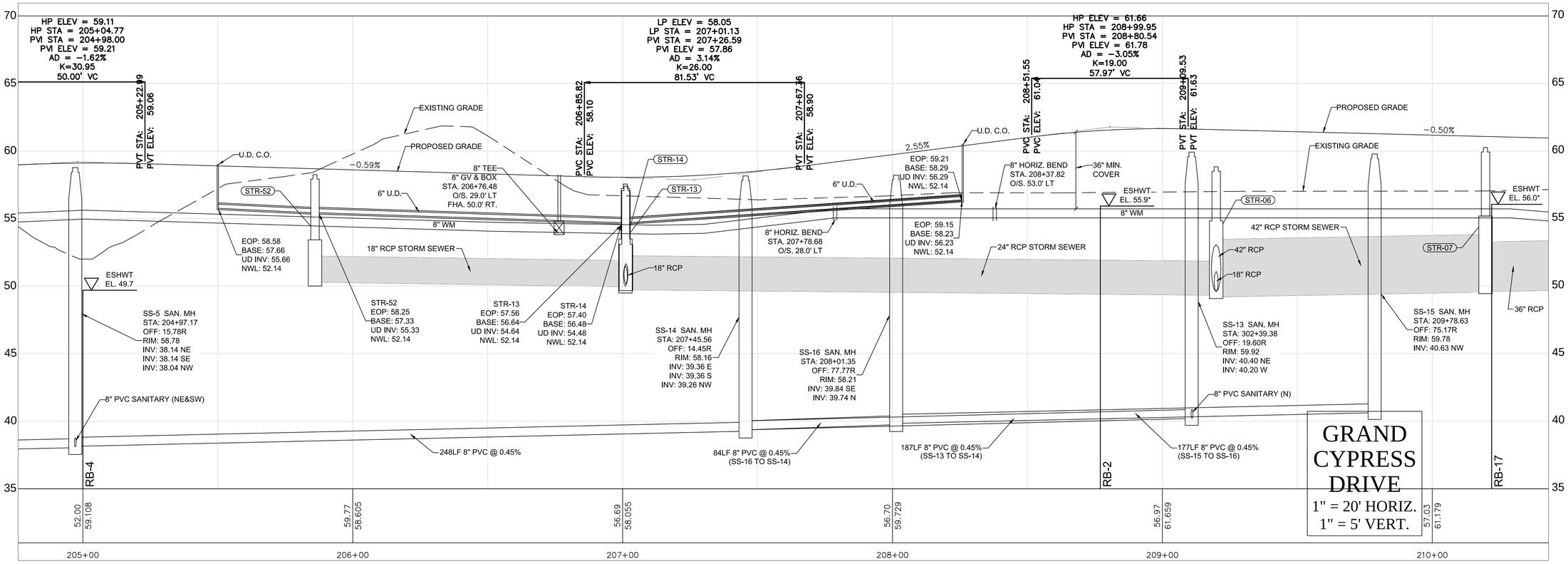

REVISIONS

NO.	DATE	DESCRIPTION	BY
1.	02-02-15	Revisions Per County Comments	ELR
2.	03-03-15	SWFWMD Resubmittal	ELR
3.	06-04-15	Access connection and Sidewalk	ELR
4.	08-07-15	County Resubmittal	ELR
5.	09-22-15	County Resubmittal - Address Comments Mod 1	ELR
6.			
7.			
8.			
9.			

Engineering ~ Planning
Environmental Science
4260 West Linebaugh Avenue
Tampa, Florida 33624
Phone: 813.265.3130 Fax: 813.265.6610
www.wraengineering.com CA 00007652

DRAWING
ROADWAY PLAN AND PROFILES
DESIGNED:JAC DRAWN:ELR APPROVED:JAC

PROJECT
CYPRESS CREEK
TOWN CENTER NORTH
JOB #:0962 DATUM: NGVD 1929

JOSEPH A. CIMINO
FL P.E. # 67540

Original Date: 07-14-14
Sheet
C-605

CAD File Name: S:\-PROJECT FILES\0967 - PASCO 54 INC. - CCTC NORTH\CADD\PLANS\C-600_ROADWAY - PLAN - PROFILES.DWG
Plot Date: 9/23/2015 11:59:21 AM
2012 Water Resource Associates, Inc.

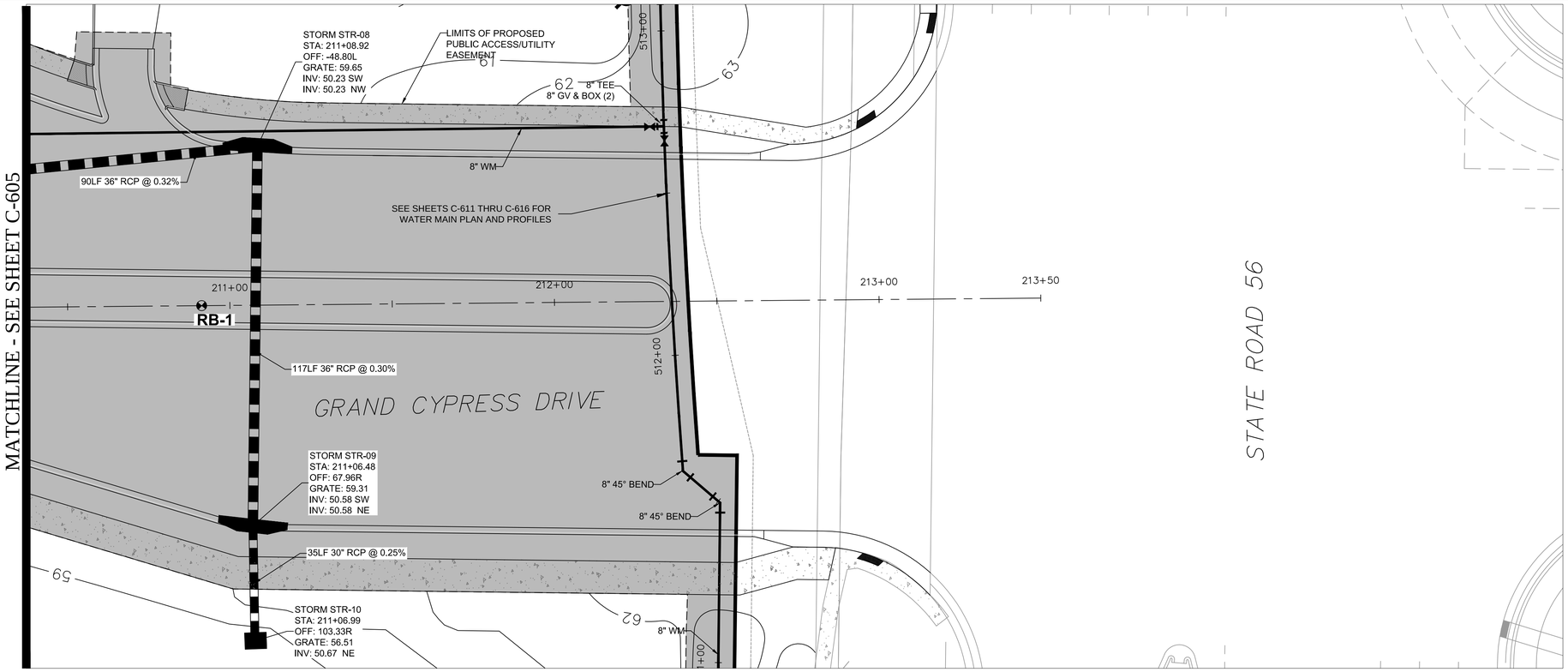

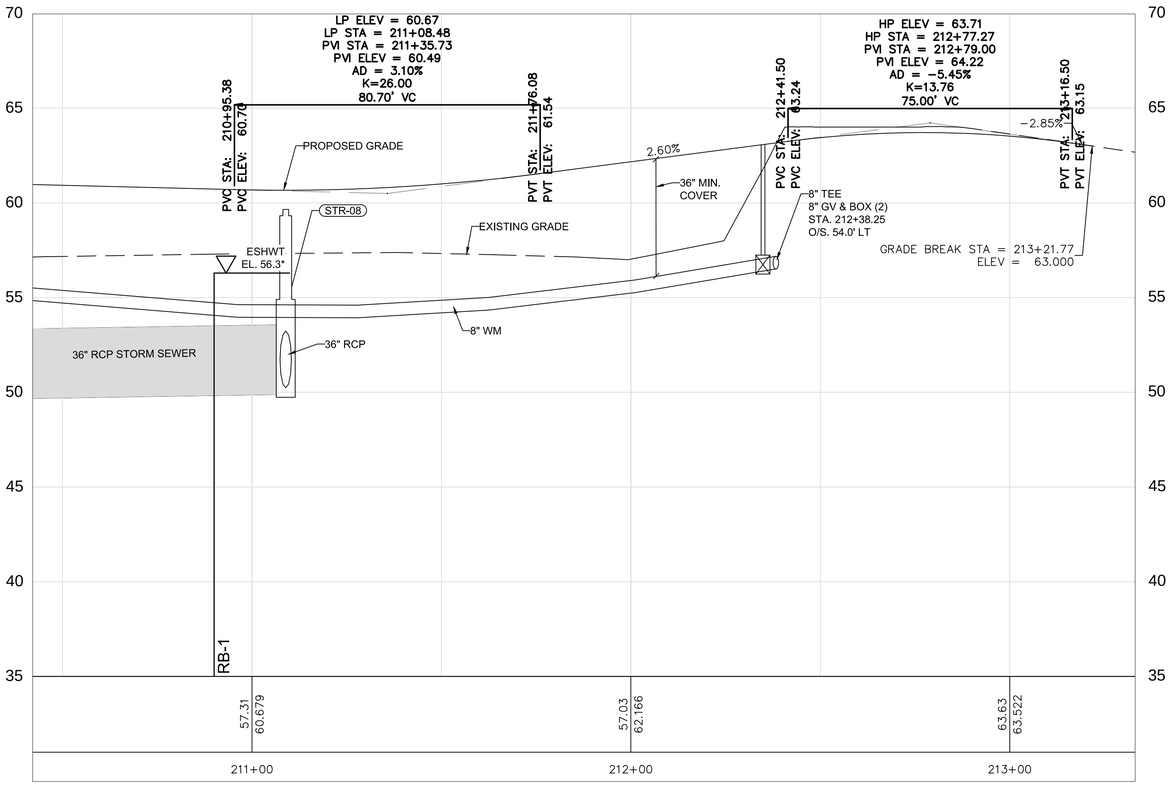

GRAND CYPRESS DRIVE
1" = 20' HORIZ.
1" = 5' VERT.

GRAPHIC SCALE
20 0 10 20 40
(IN FEET)
1 in. = 20 ft.

KEY MAP

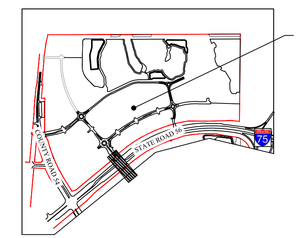

CCTC NORTH

REVISIONS

NO.	DATE	DESCRIPTION	BY
1.	02-02-15	Revisions Per County Comments	ELR
2.	03-03-15	SWFWMD Resubmittal	ELR
3.	03-04-15	Access connection and Sidewalk	ELR
4.	08-07-15	County Resubmittal	ELR
5.	09-22-15	County Resubmittal - Address Comments Mod 1	ELR
6.			
7.			
8.			
9.			

Engineering ~ Planning
Environmental Science
4260 West Linebaugh Avenue
Tampa, Florida 33624
Phone: 813.265.3130 Fax: 813.265.6610
www.wraengineering.com CA 00007652

DRAWING
ROADWAY PLAN AND PROFILES
DESIGNED: JAC DRAWN: ELR APPROVED: JAC

PROJECT
CYPRESS CREEK
TOWN CENTER NORTH
JOB #: 0962 DATUM: NGVD 1929

JOSEPH A. CIMINO
FL P.E. # 67540

Original Date: 07-14-14
Sheet
C-606

2012 Water Resource Associates, Inc. Plot Date: 9/23/2015 11:59:30 AM CAD File Name: S:\~PROJECT FILES\0967 - PASCO 54 INC. - CCTC NORTH\CADD\PLANS\C-600_ROADWAY - PLAN - PROFILES.DWG

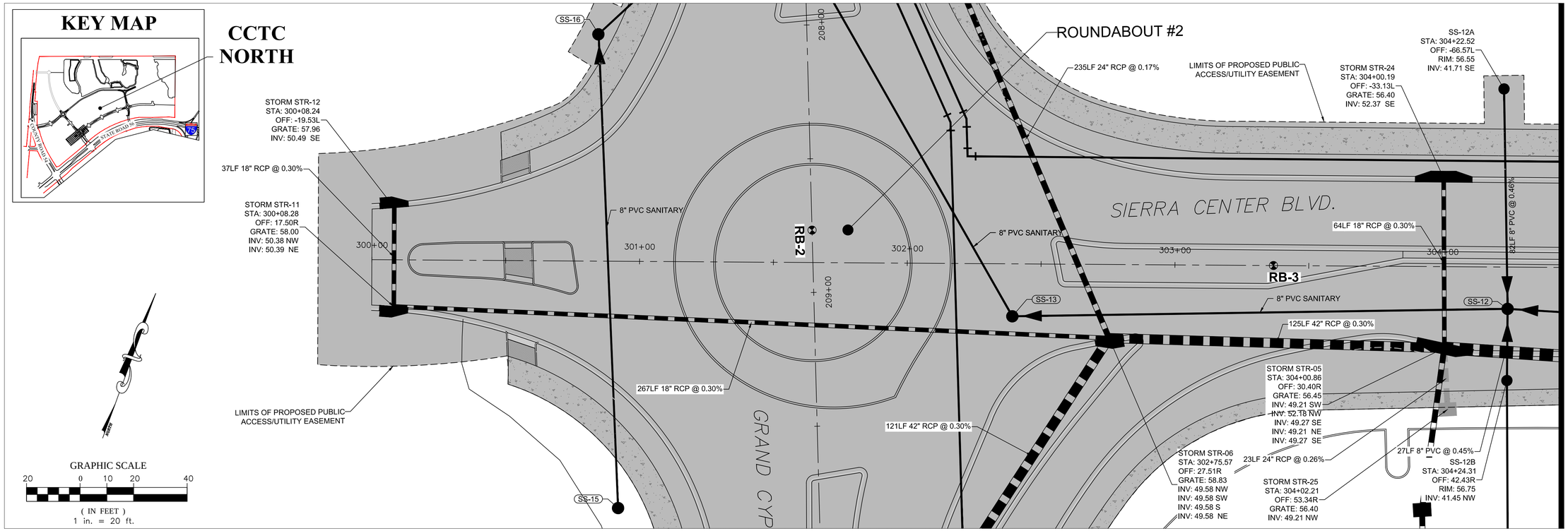

MATCHLINE - SEE SHEET C-608

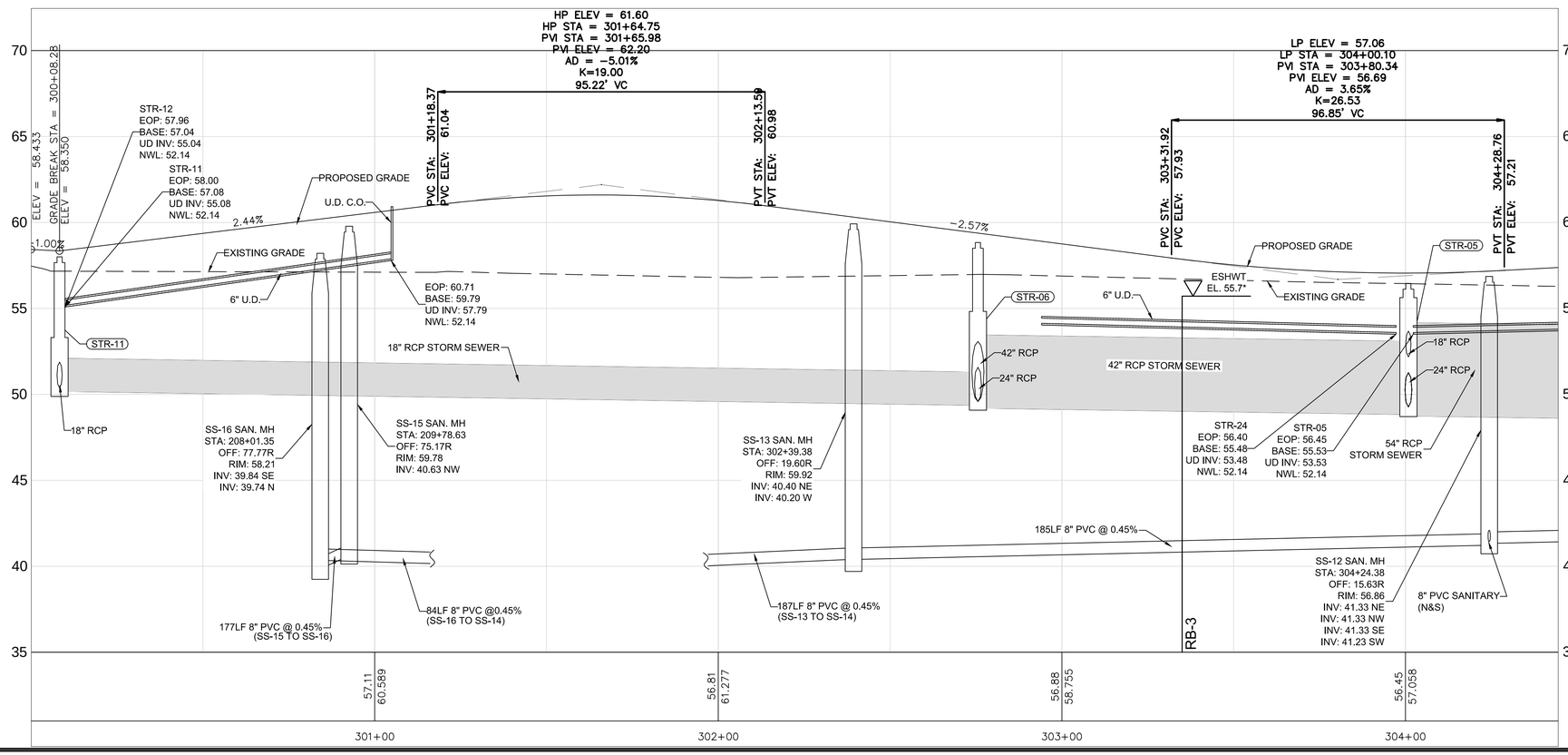

SIERRA CENTER BLVD
1" = 20' HORIZ.
1" = 5' VERT.

NO.	DATE	REVISIONS DESCRIPTION	BY
1.	02-02-15	Revisions Per County Comments	ELR
2.	03-03-15	SWFWMD Resubmittal	ELR
3.	03-24-15	Access connection and Sidewalk	ELR
4.	08-07-15	County Resubmittal	ELR
5.	09-22-15	County Resubmittal - Address Comments Mod 1	ELR
6.			
7.			
8.			
9.			

Engineering ~ Planning
Environmental Science
4260 West Linebaugh Avenue
Tampa, Florida 33624
Phone: 813.265.3130 Fax: 813.265.6610
www.wraengineering.com CA 00007652

DRAWING
ROADWAY PLAN AND PROFILES
DESIGNED: JAC DRAWN: ELR APPROVED: JAC

PROJECT
CYPRESS CREEK
TOWN CENTER NORTH
JOB #: 0967 DATUM: NGVD 1929

JOSEPH A. CIMINO
FL P.E. # 67540

Original Date: 07-14-14
Sheet
C-607

2012 Water Resource Associates, Inc. Plot Date: 9/23/2015 11:59:41 AM CAD File Name: S:\~PROJECT FILES\0967 - PASCO 54 INC. - CCTC NORTH\CADD\PLANS\C-600_ROADWAY_PLAN_PROFILES.DWG

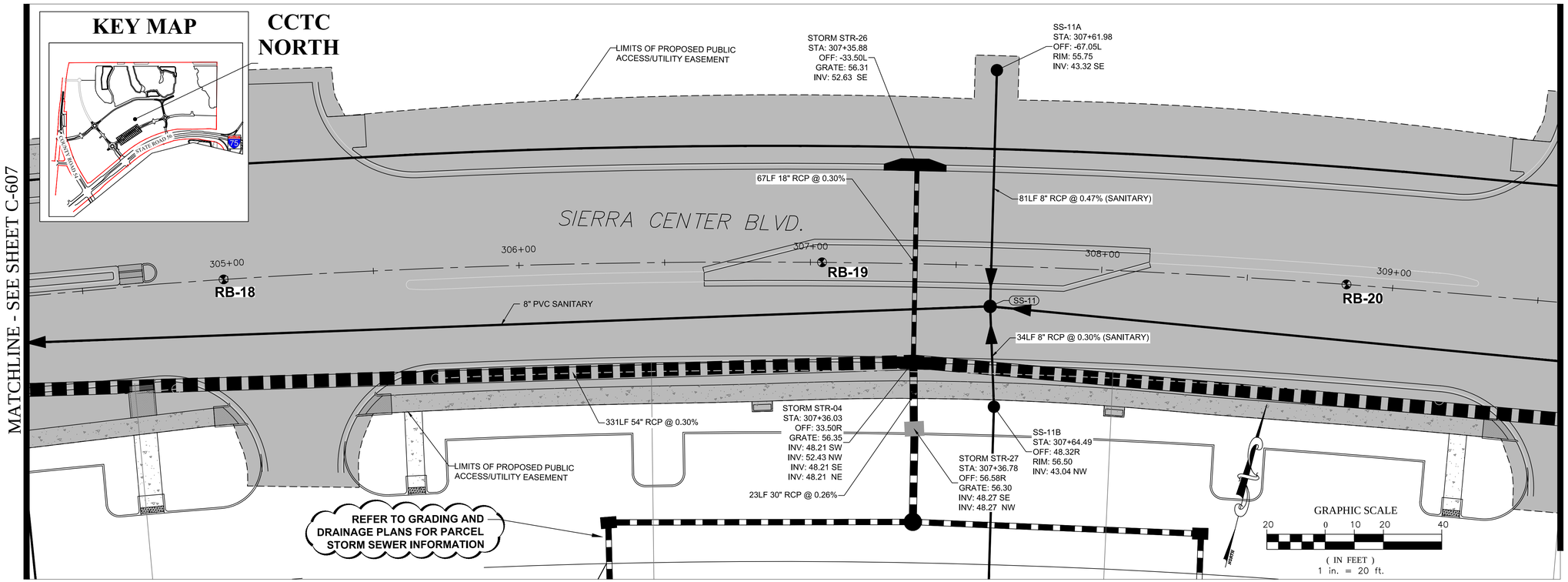

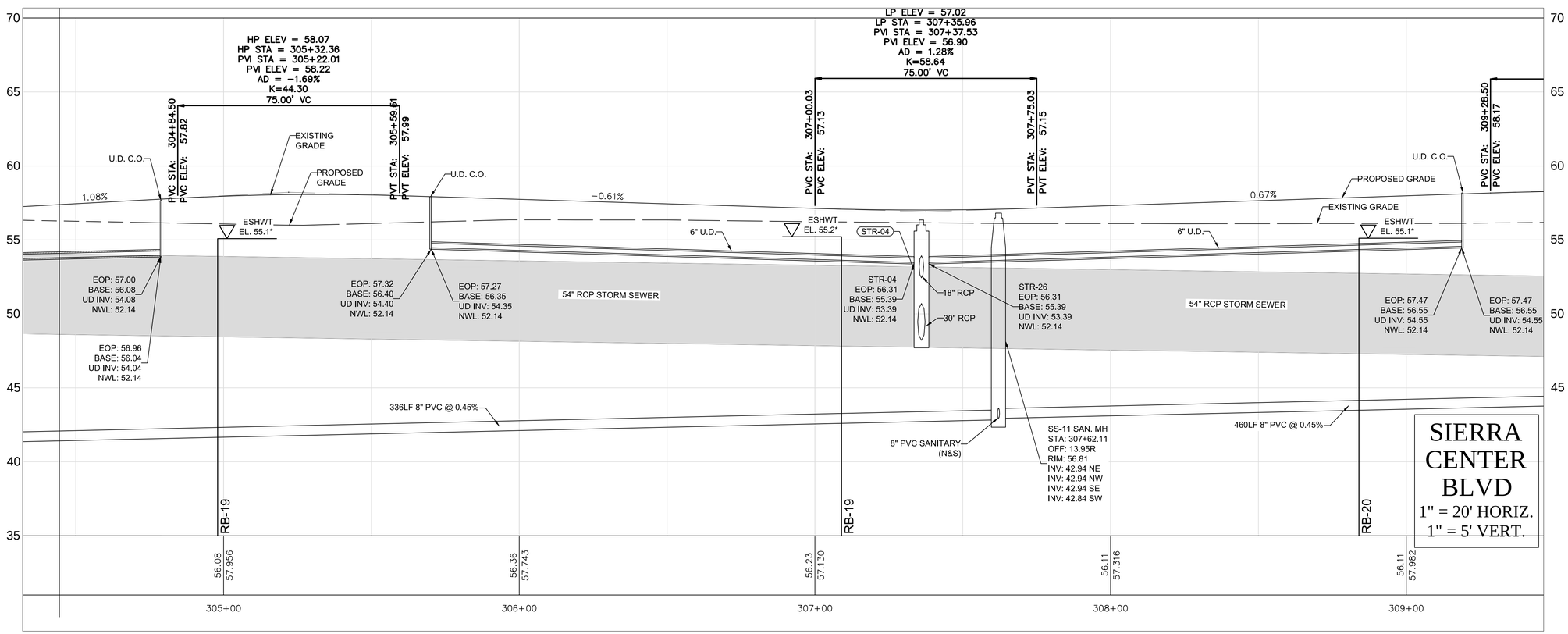

NO.	DATE	DESCRIPTION	BY
1.	02-02-15	Revisions Per County Comments	ELR
2.	03-03-15	SWFWMD Resubmittal	ELR
3.	03-06-15	Access connection and Sidewalk	ELR
4.	08-07-15	County Resubmittal	ELR
5.	09-22-15	County Resubmittal - Address Comments Mod 1	ELR
6.			
7.			
8.			
9.			

REVISIONS

Engineering ~ Planning
Environmental Science
4260 West Linebaugh Avenue
Tampa, Florida 33624
Phone: 813.265.3130 Fax: 813.265.6610
www.wraengineering.com CA 00007652

DRAWING: ROADWAY PLAN AND PROFILES

DESIGNED: JAC DRAWN: ELR APPROVED: JAC

PROJECT: CYPRESS CREEK TOWN CENTER NORTH

JOB #: 0967 DATUM: NGVD 1929

JOSEPH A. CIMINO
FL P.E. # 67540

Original Date: 07-14-14

Sheet

C-608

2012 Water Resource Associates, Inc. Plot Date: 9/23/2015 11:59:51 AM CAD File Name: S:\--PROJECT FILES\0967 - PASCO 54 INC. - CCTC NORTH\CADD\PLANS\C-600_ROADWAY_PLAN_PROFILES.DWG

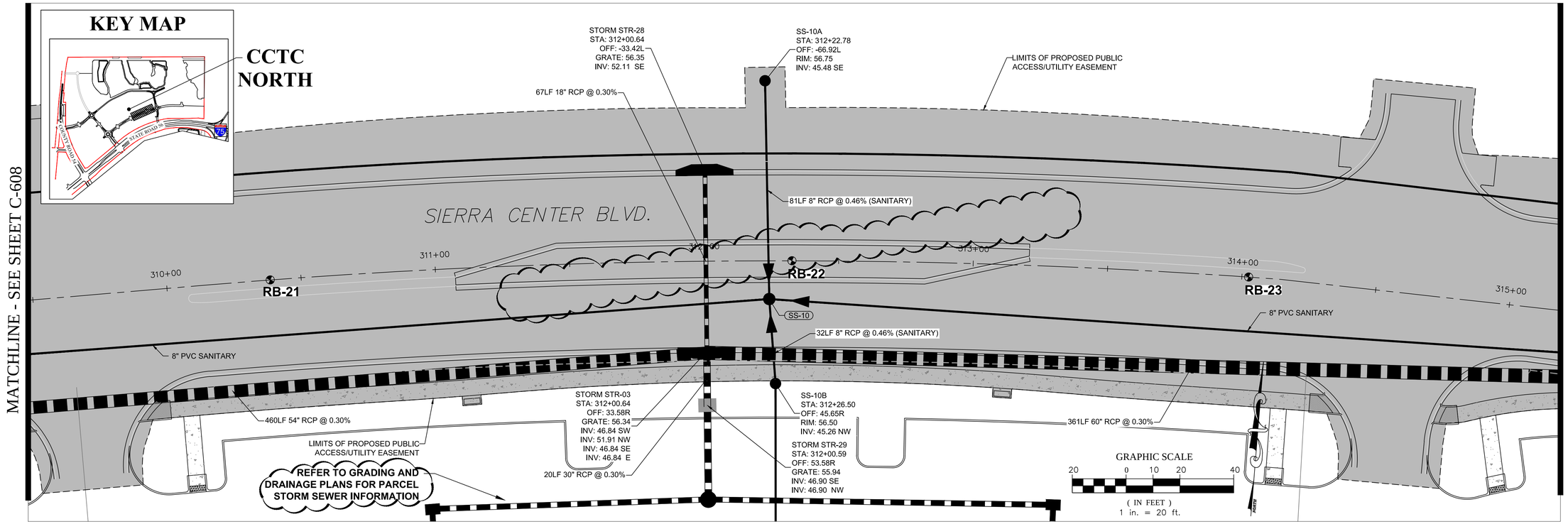

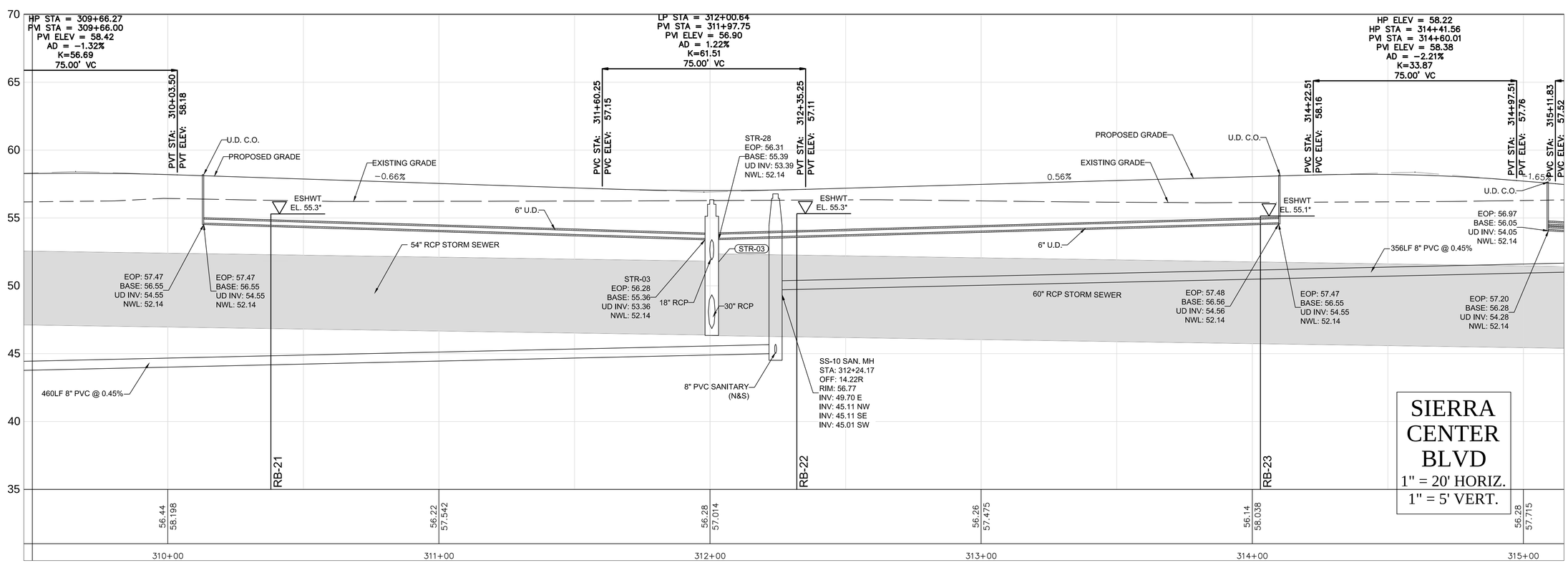

REVISIONS

NO.	DATE	DESCRIPTION	BY
1.	02-02-15	Revisions Per County Comments	ELR
2.	03-03-15	SWFWMD Resubmittal	ELR
3.	06-05-15	Accommodate Sidewalk	ELR
4.	08-07-15	County Resubmittal	ELR
5.	09-22-15	County Resubmittal - Address Comments Mod 1	ELR
6.			
7.			
8.			
9.			

Engineering ~ Planning
Environmental Science
4260 West Linebaugh Avenue
Tampa, Florida 33624
Phone: 813.265.3130 Fax: 813.265.6610
www.wraengineering.com CA 00007652

DRAWING
ROADWAY PLAN AND PROFILES
DESIGNED: JAC DRAWN: ELR APPROVED: JAC

PROJECT
CYPRESS CREEK TOWN CENTER NORTH
JOB #: 0962 DATUM: NGVD 1929

JOSEPH A. CIMINO
FL P.E. # 67540

Original Date: 07-14-14
Sheet
C-609

2012 Water Resource Associates, Inc. Plot Date: 9/23/2015 12:00:00 PM CAD File Name: S:\~PROJECT FILES\0967 - PASCO 54 INC. - CCTC NORTH\CADD\PLANS\C-600_ROADWAY_PLAN_PROFILES.DWG

MATCHLINE - SEE SHEET C-609

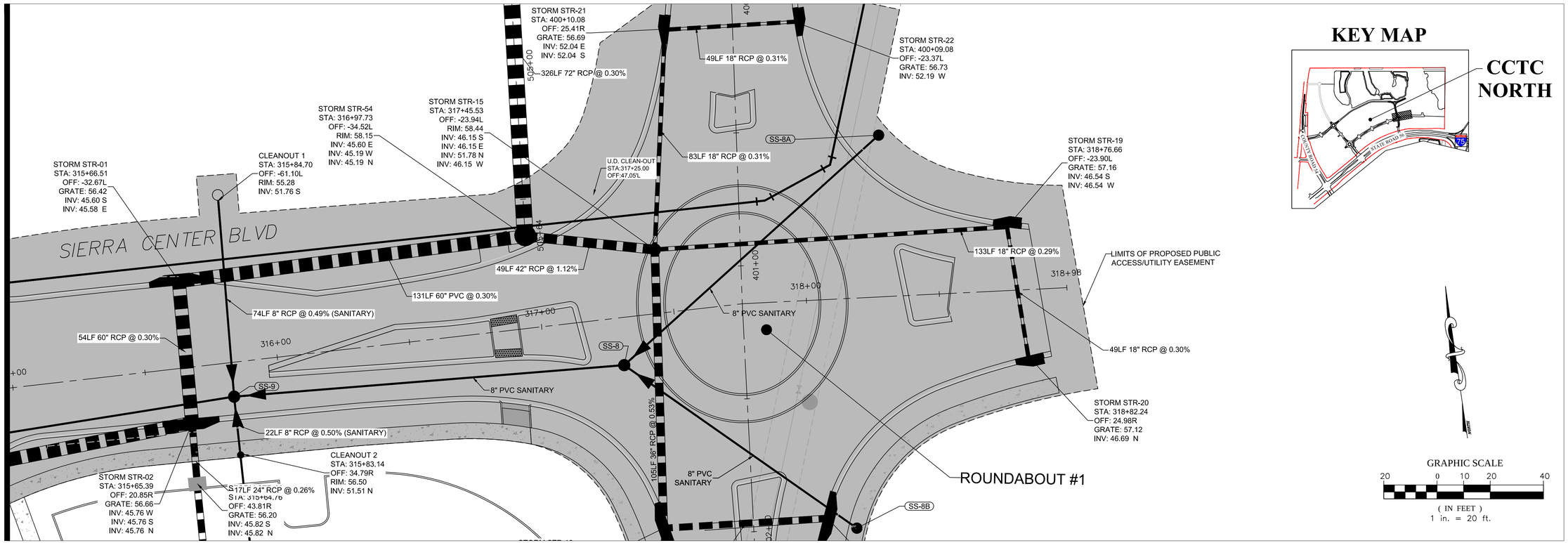

KEY MAP

GRAPHIC SCALE

20 0 10 20 40

(IN FEET)
1 in. = 20 ft.

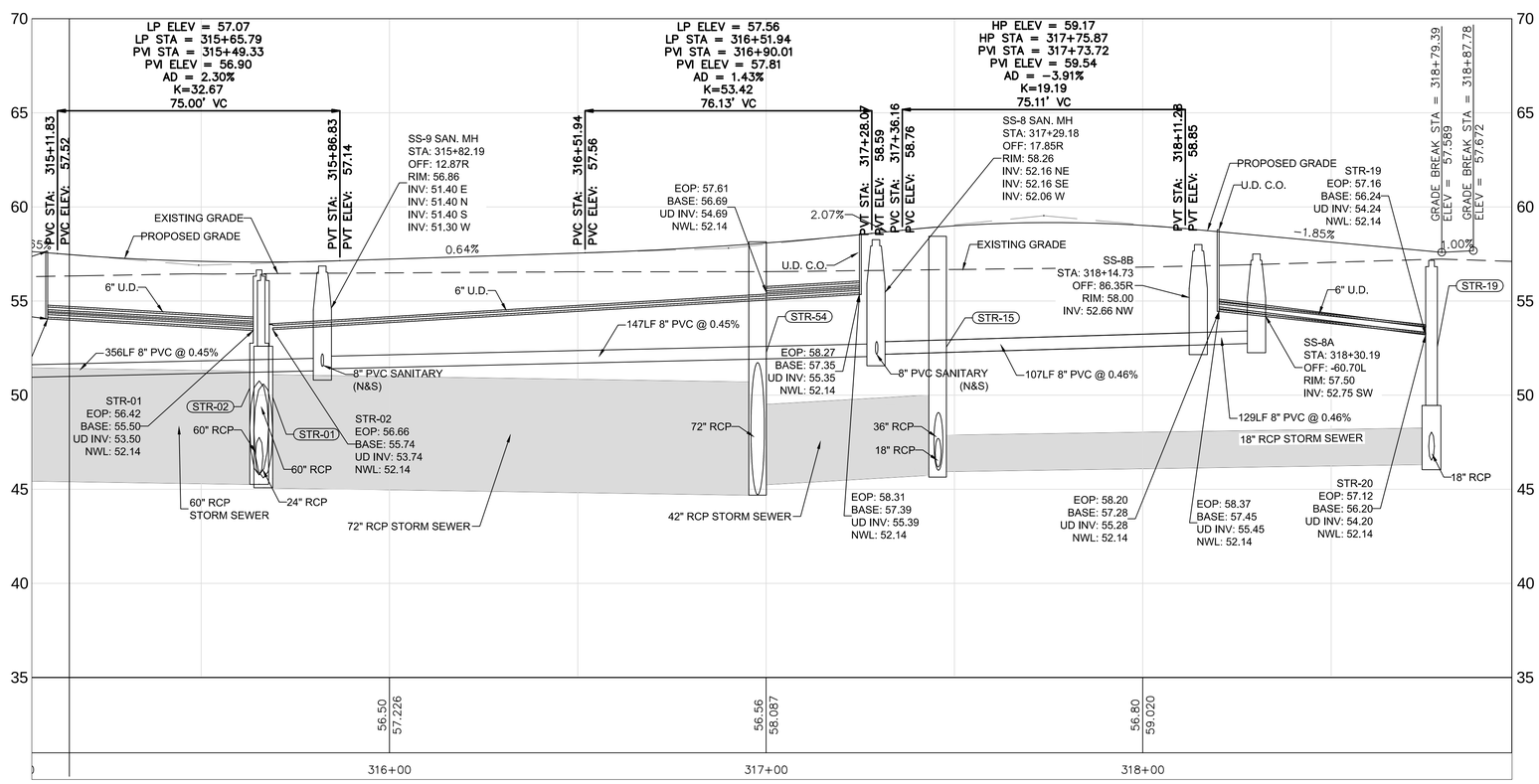

SIERRA CENTER BLVD
1" = 20' HORIZ.
1" = 5' VERT.

REVISIONS

NO.	DATE	DESCRIPTION	BY
1.	02-02-15	Revisions Per County Comments	ELR
2.	03-03-15	SWFWMD Resubmittal	ELR
3.	06-04-15	Access Comments Mod	ELR
4.	08-07-15	County Resubmittal	ELR
5.	09-22-15	County Resubmittal - Address Comments Mod 1	ELR
6.			
7.			
8.			
9.			

Engineering ~ Planning
Environmental Science
4260 West Linebaugh Avenue
Tampa, Florida 33624
Phone: 813.265.3130 Fax: 813.265.6610
www.wraengineering.com CA 00007652

DRAWING
ROADWAY PLAN AND PROFILES

DESIGNED: JAC DRAWN: ELR APPROVED: JAC

PROJECT
CYPRESS CREEK TOWN CENTER NORTH

JOB #: 0962 DATUM: NGVD 1929

JOSEPH A. CIMINO
FL P.E. # 67540

Original Date: 07-14-14
Sheet
C-610

2012 Water Resource Associates, Inc. Plot Date: 9/23/2015 12:00:10 PM CAD File Name: S:\~PROJECT FILES\0967 - PASCO 54 INC. - CCTC NORTH\CADD\PLANS\C-600_ROADWAY - PLAN - PROFILES.DWG

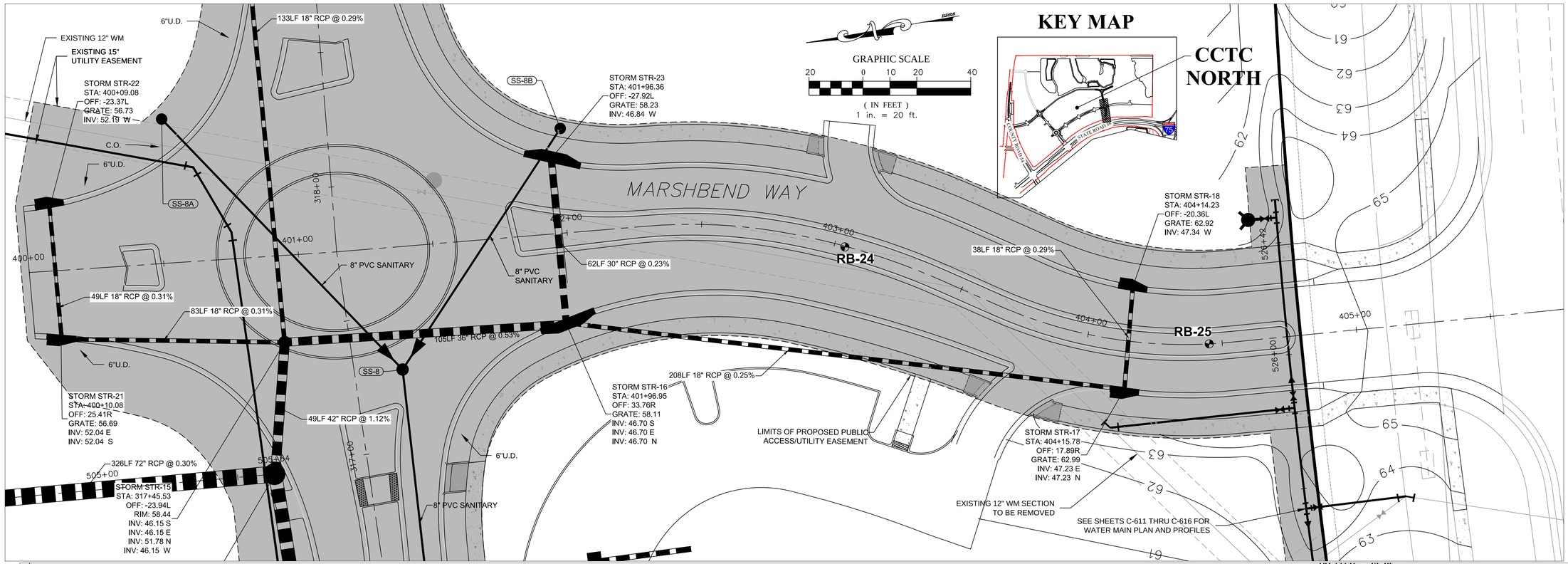

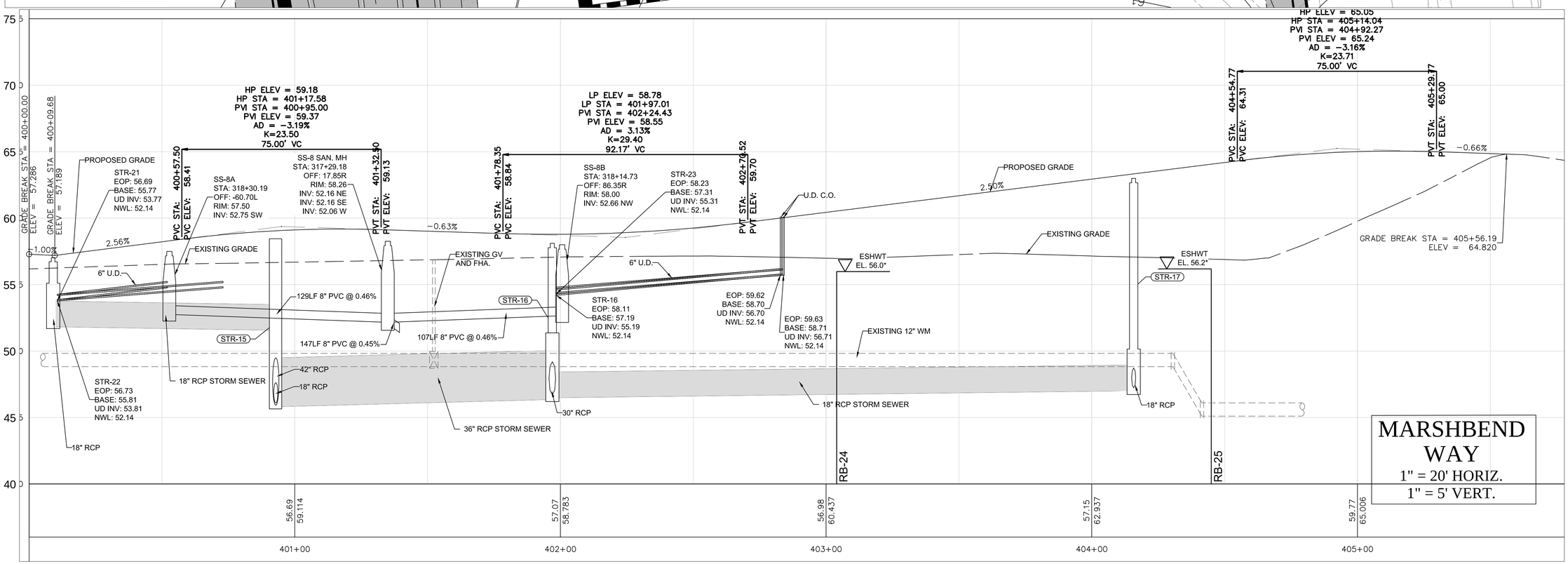

REVISIONS

NO.	DATE	DESCRIPTION	BY
1.	02-02-15	Revisions Per County Comments	ELR
2.	03-03-15	SWFWMD Resubmittal	ELR
3.	04-24-15	County Resubmittal	ELR
4.	08-07-15	County Resubmittal - Sidewalk	ELR
5.	09-22-15	County Resubmittal - Address Comments Mod 1	ELR
6.			
7.			
8.			
9.			

Engineering ~ Planning
Environmental Science
4260 West Linebaugh Avenue
Tampa, Florida 33624
Phone: 813.265.3130 Fax: 813.265.6610
www.wraengineering.com CA 00007652

DRAWING
ROADWAY PLAN AND PROFILES
DESIGNED: JAC DRAWN: ELR APPROVED: JAC

PROJECT
CYPRESS CREEK TOWN CENTER NORTH
JOB #: 19867 DATUM: NGVD 1929

JOSEPH A. CIMINO
FL P.E. # 67540

Original Date: 07-14-14
Sheet
C-611

2012 Water Resource Associates, Inc. Plot Date: 9/23/2015 12:00:20 PM CAD File Name: S:\~PROJECT FILES\19867 - PASCO 54 INC. - CCTC NORTH\CADD\PLANS\C-600_ROADWAY_PLAN_PROFILES.DWG

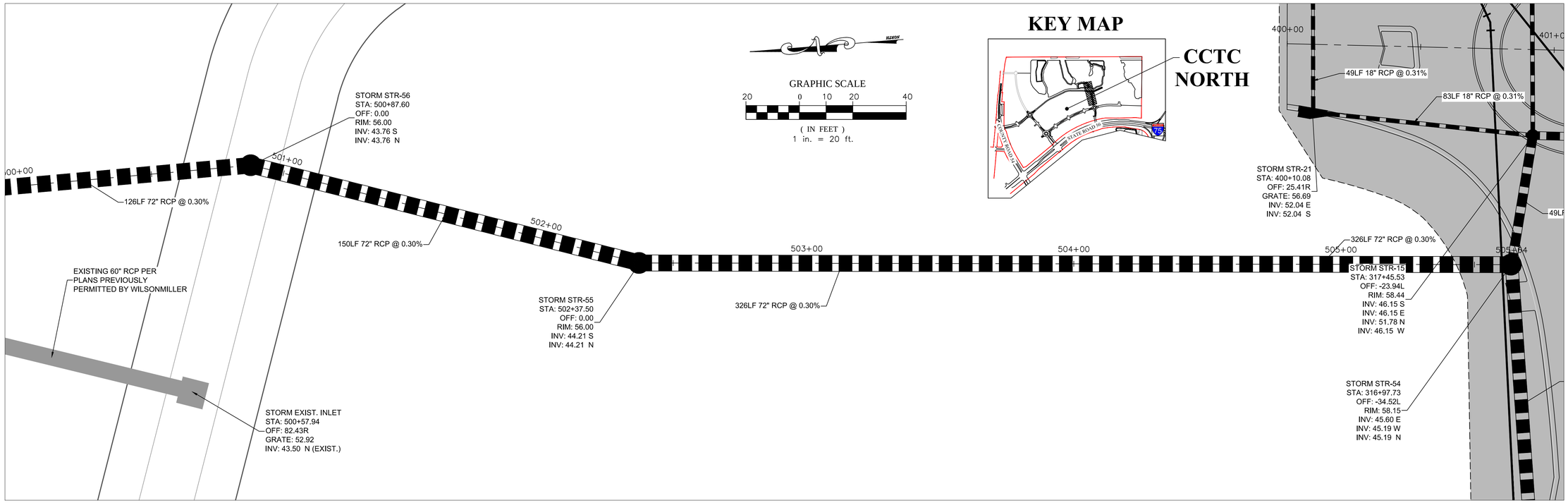

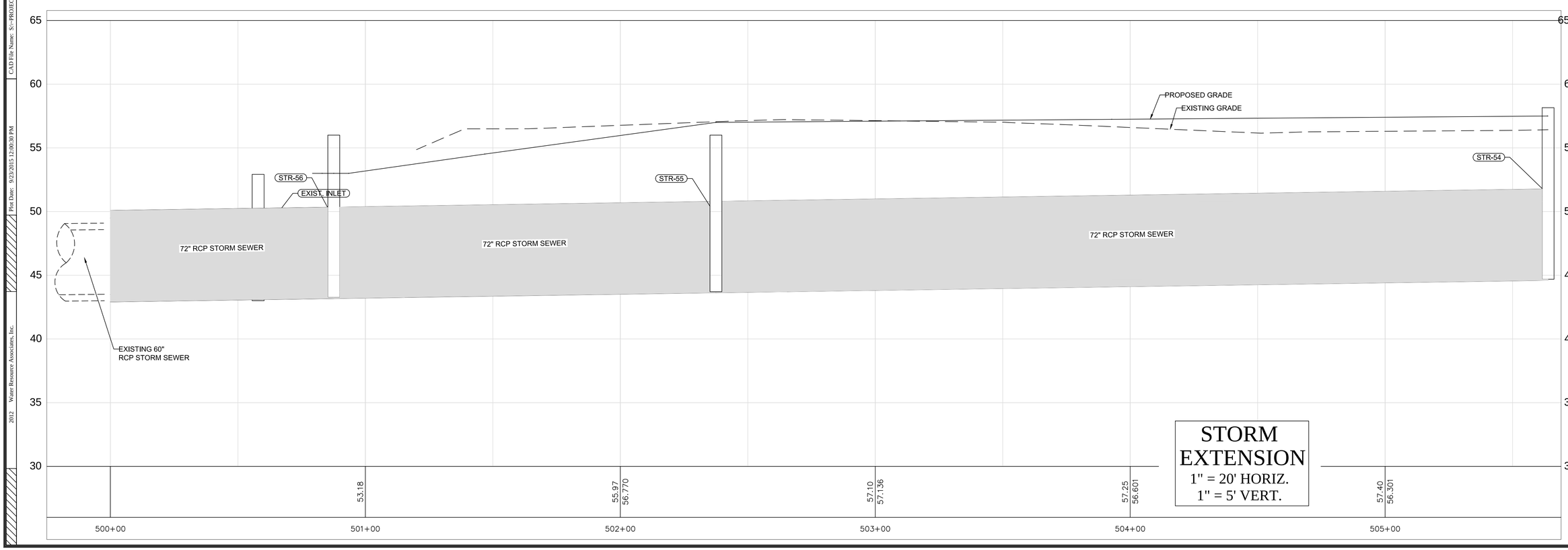

REVISIONS

NO.	DATE	DESCRIPTION	BY
1.	02-02-15	Revisions Per County Comments	ELR
2.	03-03-15	SWFWMD Resubmittal	ELR
3.	07-14-15	Access connection and Sidewalk	ELR
4.	08-07-15	County Resubmittal	ELR
5.	09-22-15	County Resubmittal - Address Comments Mod 1	ELR
6.			
7.			
8.			
9.			

Engineering ~ Planning
Environmental Science
4260 West Linebaugh Avenue
Tampa, Florida 33624
Phone: 813.265.3130 Fax: 813.265.6610
www.wraengineering.com CA 00007652

DRAWING
STORM EXTENSION
PLAN AND PROFILES
DESIGNED: JAC DRAWN: ELR APPROVED: JAC

PROJECT
CYPRESS CREEK
TOWN CENTER NORTH
JOB #: 0962 DATUM: NGVD 1929

JOSEPH A. CIMINO
FL P.E. # 67540

Original Date: 07-14-14
Sheet
C-612

2012 Water Resource Associates, Inc. Plot Date: 9/22/2015 12:00:30 PM CAD File Name: S:\~PROJECT FILES\0967 - PASCO 54 INC. - CCTC NORTH\CADD\PLANS\C-600_ROADWAY_PLAN_PROFILES.DWG

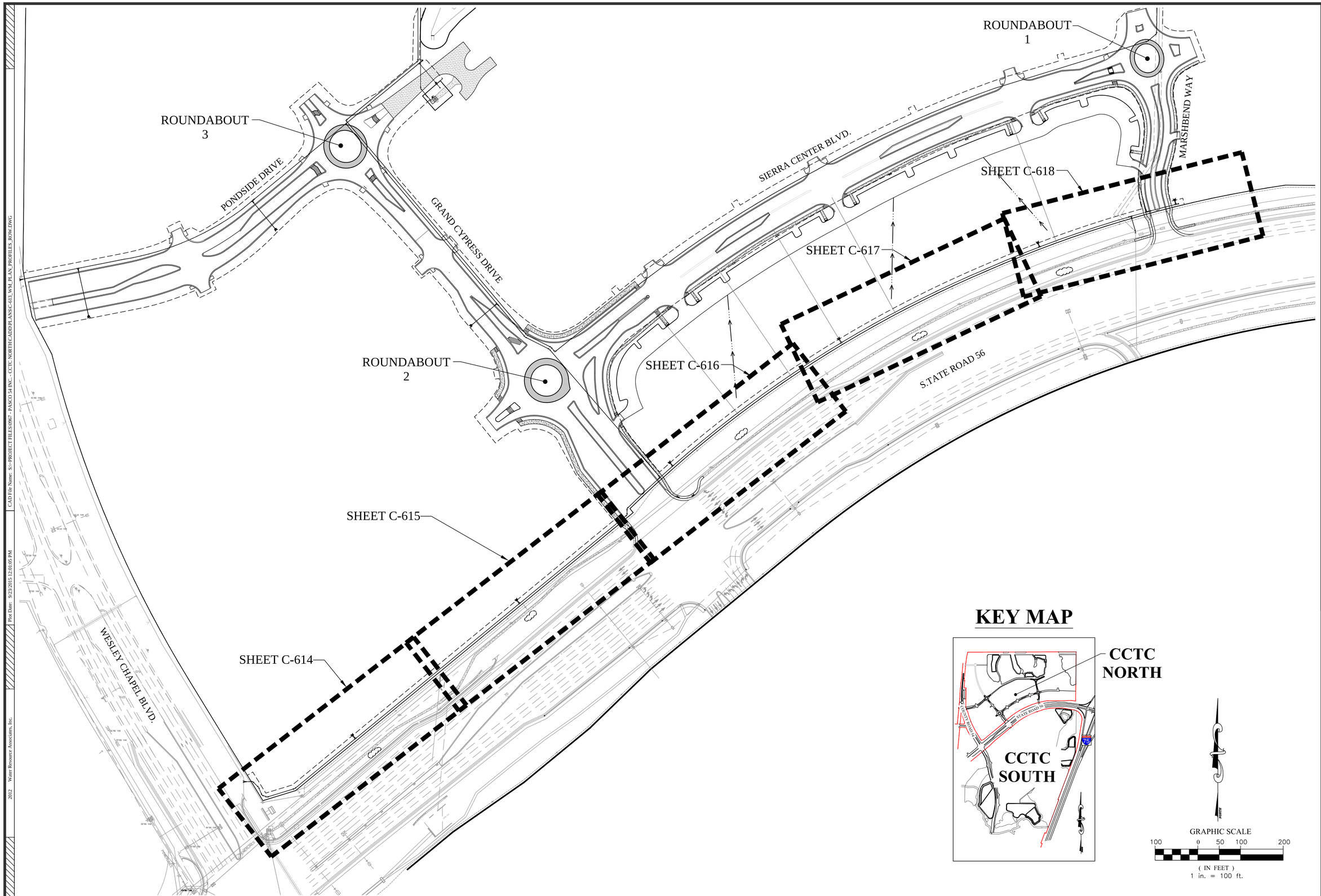

REVISIONS			
NO.	DATE	DESCRIPTION	BY
1.	02-02-15	Revisions Per County Comments	ELR
2.	03-03-15	SWFWMD Resubmittal	ELR
3.	05-06-15	Access connection and Sidewalk	ELR
4.	08-07-15	County Resubmittal	ELR
5.	09-22-15	County Resubmittal - Address Comments Mod 1	ELR
6.			
7.			
8.			
9.			

Engineering ~ Planning
Environmental Science
4260 West Linebaugh Avenue
Tampa, Florida 33624
Phone: 813.265.3130 Fax: 813.265.6610
www.wraengineering.com CA 00007652

DRAWING
WATERMAIN AT R.O.W.
PLAN AND PROFILES
KEY MAP
DESIGNED: JAC DRAWN: ELR APPROVED: JAC

PROJECT
CYPRESS CREEK
TOWN CENTER NORTH
JOB #: 0967 DATUM: NGVD 1929

JOSEPH A. CIMINO
FL P.E. # 67540

Original Date: 07-14-14
Sheet
C-613

2012 Water Resource Associates, Inc. Plot Date: 9/23/2015 12:01:05 PM CAD File Name: S:\--PROJECT FILES\0967 - PASCO 54 INC. - CCTC NORTH\CADD\PLANS\C-613_WM_PLAN_PROFILES_ROW.DWG

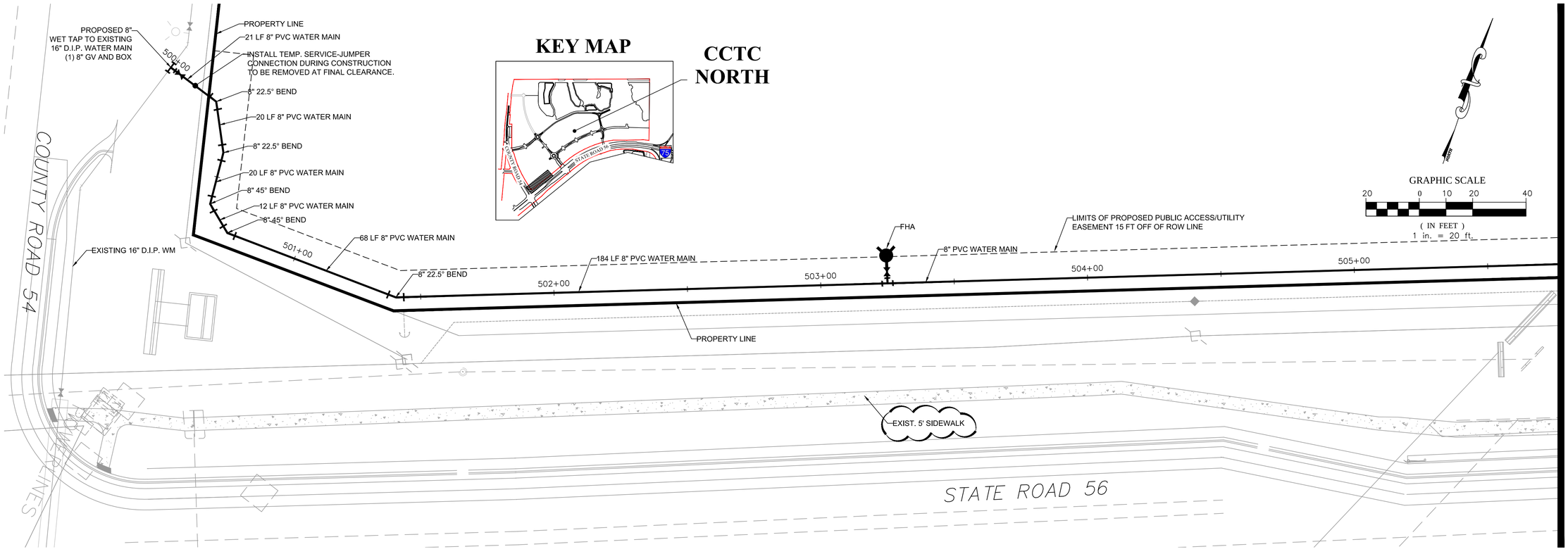

MATCHLINE - SEE SHEET C-613

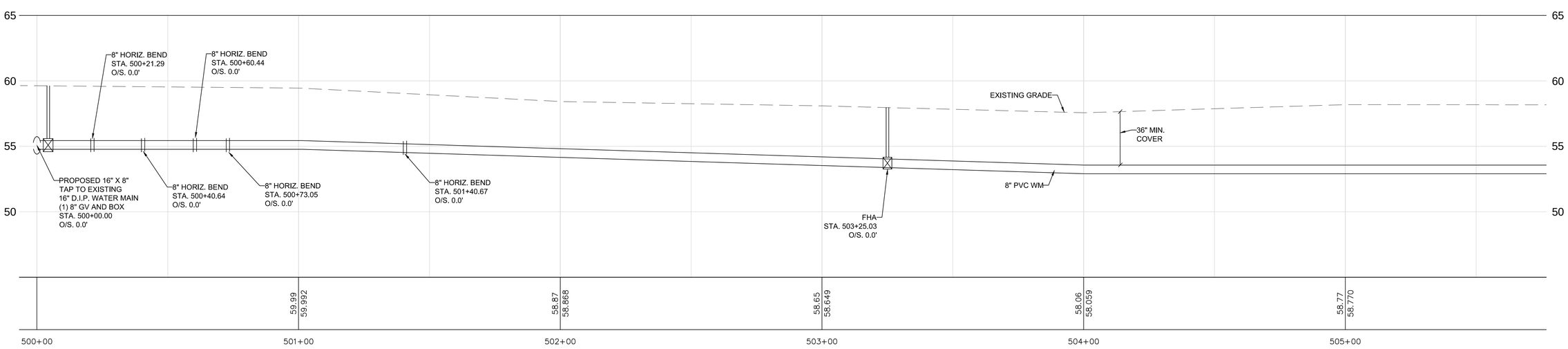

WATER MAIN AT RIGHT-OF-WAY

1" = 20' HORIZ.
1" = 5' VERT.

REVISIONS

NO.	DATE	DESCRIPTION	BY
1.	02-02-15	Revisions Per County Comments	ELR
2.	03-03-15	SWFWMD Resubmittal	ELR
3.	03-26-15	Access comments and Sidewalk	JAC
4.	08-07-15	County Resubmittal	ELR
5.	09-22-15	County Resubmittal - Address Comments Mod 1	ELR
6.			
7.			
8.			
9.			

Engineering ~ Planning
Environmental Science
4260 West Linebaugh Avenue
Tampa, Florida 33624
Phone: 813.265.3130 Fax: 813.265.6610
www.wraengineering.com CA 00007652

DRAWING
WATERMAIN AT R.O.W.
PLAN AND PROFILES
DESIGNED: JAC DRAWN: ELR APPROVED: JAC

PROJECT
CYPRESS CREEK
TOWN CENTER NORTH
JOB #: 0962 DATUM: NGVD 1929

JOSEPH A. CIMINO
FL P.E. # 67540

Original Date: 07-14-14
Sheet
C-614

2012 Water Resource Associates, Inc. Plot Date: 9/23/2015 12:01:13 PM CAD File Name: S:\~PROJECT FILES\0967 - PASCO 54 INC. - CCTC NORTH\CADD\PLANS\C-613_WM_PLAN_PROFILES_ROW.DWG

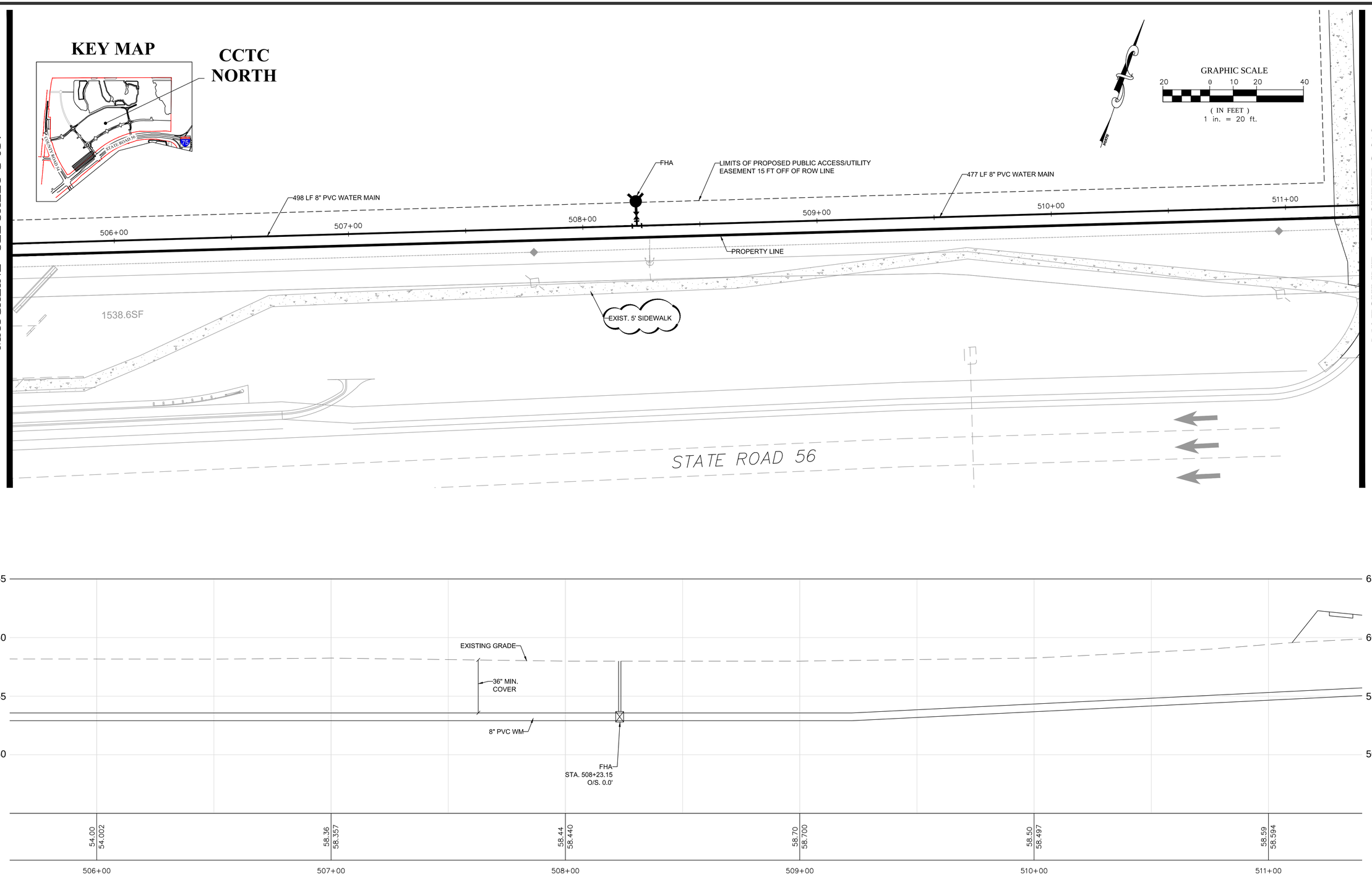

WATER MAIN AT RIGHT-OF-WAY

1" = 20' HORIZ.
1" = 5' VERT.

REVISIONS

NO.	DATE	DESCRIPTION	BY
1.	02-02-15	Revisions Per County Comments	ELR
2.	03-03-15	SWFWMD Resubmittal	ELR
3.	07-24-15	Revisions per County and Sidewalk	ELR
4.	08-07-15	County Resubmittal	ELR
5.	09-22-15	County Resubmittal - Address Comments Mod 1	ELR
6.			
7.			
8.			
9.			

Engineering ~ Planning
Environmental Science
4260 West Linebaugh Avenue
Tampa, Florida 33624
Phone: 813.265.3130 Fax: 813.265.6610
www.wraengineering.com CA 00007652

DRAWING
WATERMAIN AT R.O.W.
PLAN AND PROFILES
DESIGNED: JAC DRAWN: ELR APPROVED: JAC

PROJECT
CYPRESS CREEK
TOWN CENTER NORTH
JOB #: 0962 DATUM: NGVD 1929

JOSEPH A. CIMINO
FL P.E. # 67540

Original Date: 07-14-14
Sheet
C-615

2012 Water Resource Associates, Inc. Plot Date: 9/23/2015 12:30:23 PM CAD File Name: S:\~PROJECT FILES\0967 - PASCO 54 INC. - CCTC NORTH\CADD\PLANS\C-613_WM_PLAN_PROFILES_ROW.DWG

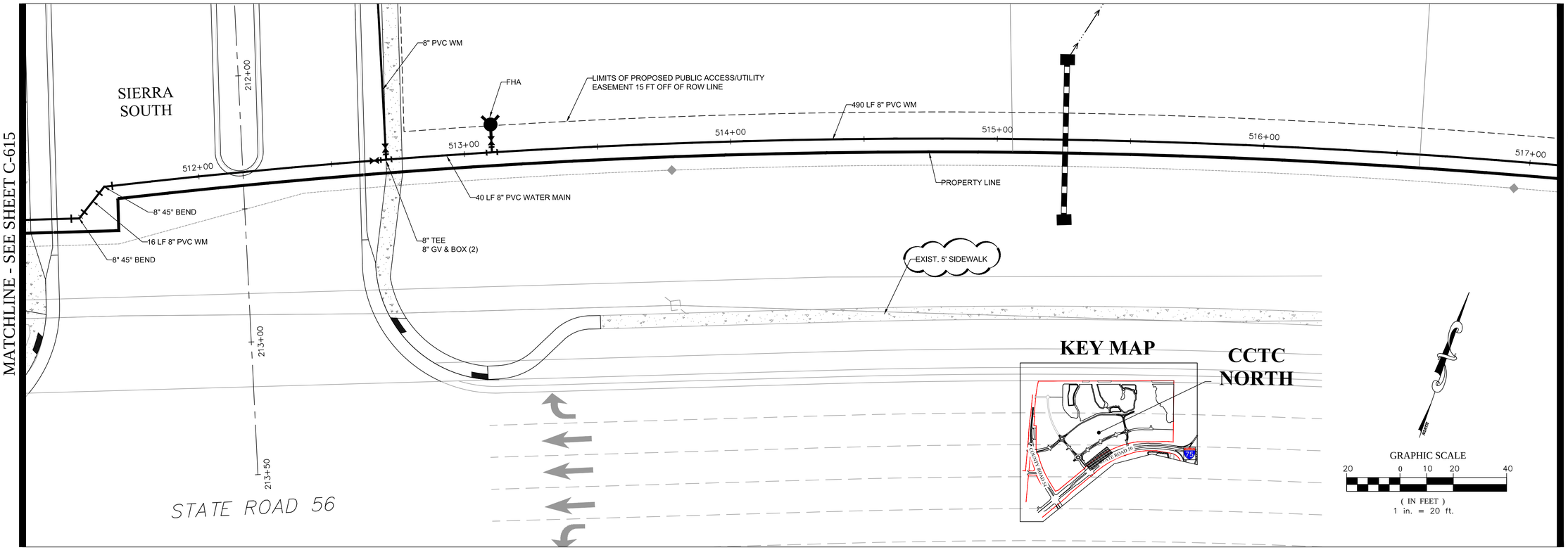

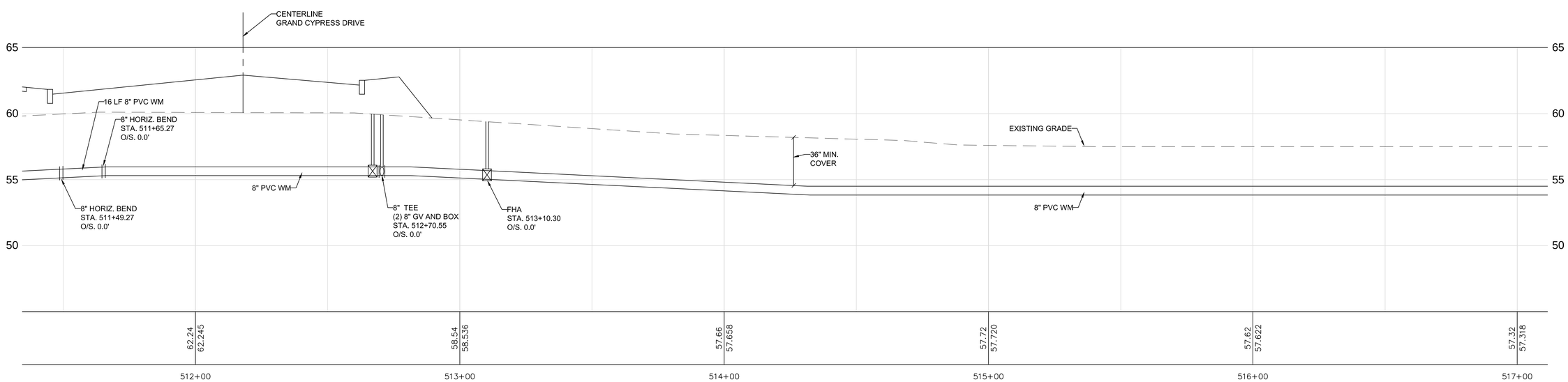

WATER MAIN AT RIGHT-OF-WAY

1" = 20' HORIZ.
1" = 5' VERT.

REVISIONS

NO.	DATE	DESCRIPTION	BY
1.	02-02-15	Revisions Per County Comments	ELR
2.	03-03-15	SWFWMD Resubmittal	ELR
3.	03-05-15	Access comments and Sidewalk	ELR
4.	08-07-15	County Resubmittal	ELR
5.	09-22-15	County Resubmittal - Address Comments Mod 1	ELR
6.			
7.			
8.			
9.			

Engineering ~ Planning
Environmental Science
4260 West Linebaugh Avenue
Tampa, Florida 33624
Phone: 813.265.3130 Fax: 813.265.6610
www.wraengineering.com CA 00007652

DRAWING
WATERMAIN AT R.O.W. PLAN AND PROFILES
DESIGNED: JAC DRAWN: ELR APPROVED: JAC

PROJECT
CYPRESS CREEK TOWN CENTER NORTH
JOB #: 0962 DATUM: NGVD 1929

JOSEPH A. CIMINO
FL P.E. # 67540

Original Date: 07-14-14
Sheet
C-616

2012 Water Resource Associates, Inc. Plot Date: 9/23/2015 12:01:33 PM CAD File Name: S:\~PROJECT FILES\0967 - PASCO 54 INC. - CCTC NORTH\CADD\PLANS\C-613_WM_PLAN_PROFILES_ROW.DWG

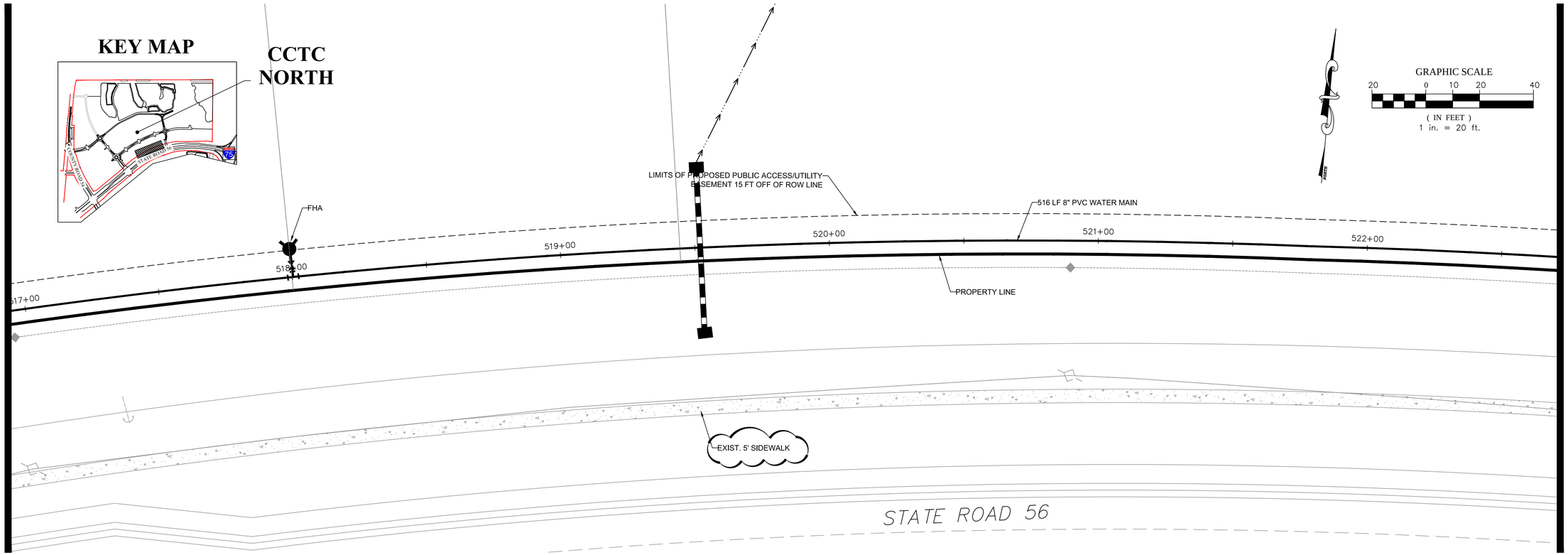

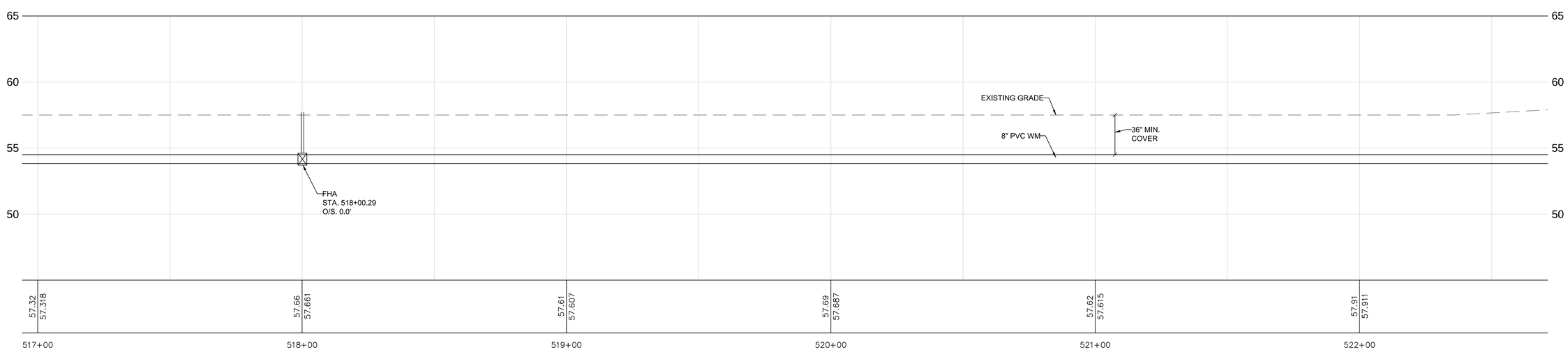

WATER MAIN AT RIGHT-OF-WAY

1" = 20' HORIZ.
1" = 5' VERT.

REVISIONS

NO.	DATE	DESCRIPTION	BY
1.	02-02-15	Revisions Per County Comments	ELR
2.	03-03-15	SWFWMD Resubmittal	ELR
3.	07-02-15	Address comments and Sidewalk	ELR
4.	08-07-15	County Resubmittal	ELR
5.	09-22-15	County Resubmittal - Address Comments Mod 1	ELR
6.			
7.			
8.			
9.			

Engineering ~ Planning
Environmental Science
4260 West Linebaugh Avenue
Tampa, Florida 33624
Phone: 813.265.3130 Fax: 813.265.6610
www.wraengineering.com CA 00007652

DRAWING
WATERMAIN AT R.O.W.
PLAN AND PROFILES
DESIGNED: JAC DRAWN: ELR APPROVED: JAC

PROJECT
CYPRESS CREEK
TOWN CENTER NORTH
JOB #: 0962 DATUM: NGVD 1929

JOSEPH A. CIMINO
FL P.E. # 67540

Original Date: 07-14-14
Sheet
C-617

2012 Water Resource Associates, Inc. Plot Date: 9/22/2015 12:01:43 PM CAD File Name: S:\~PROJECT FILES\0967 - PASCO 54 INC. - CCTC NORTH\CADD\PLANS\C-613_WM_PLAN_PROFILES_ROW.DWG

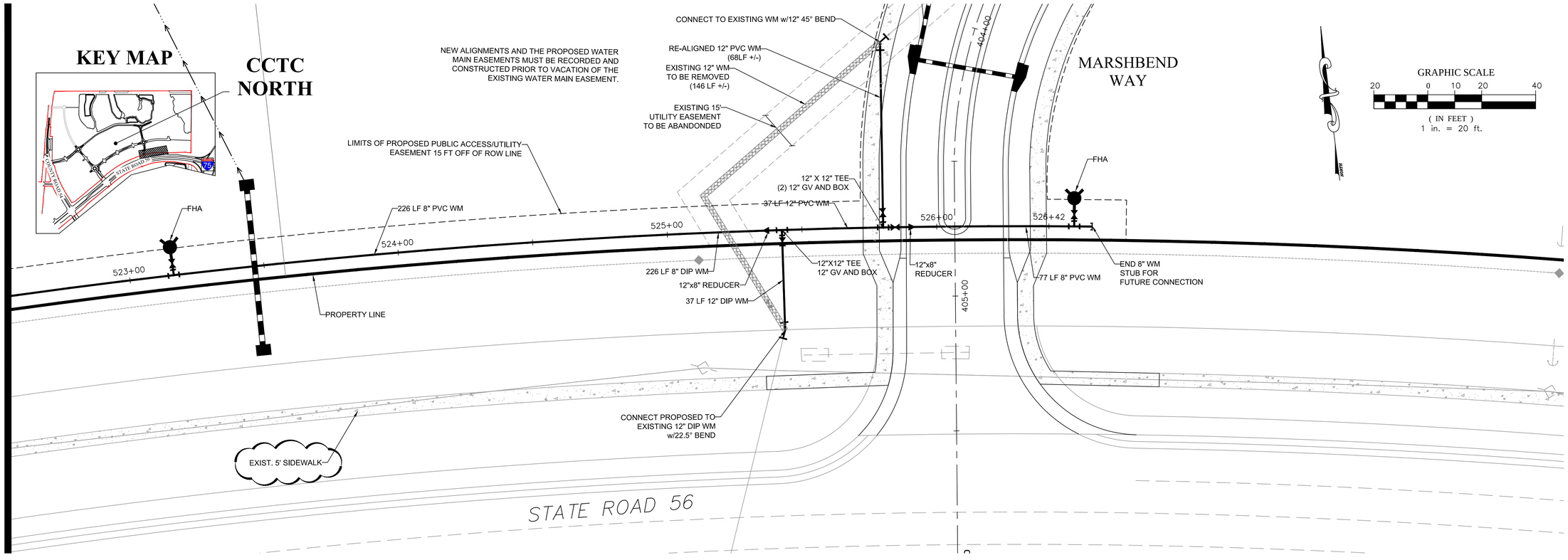

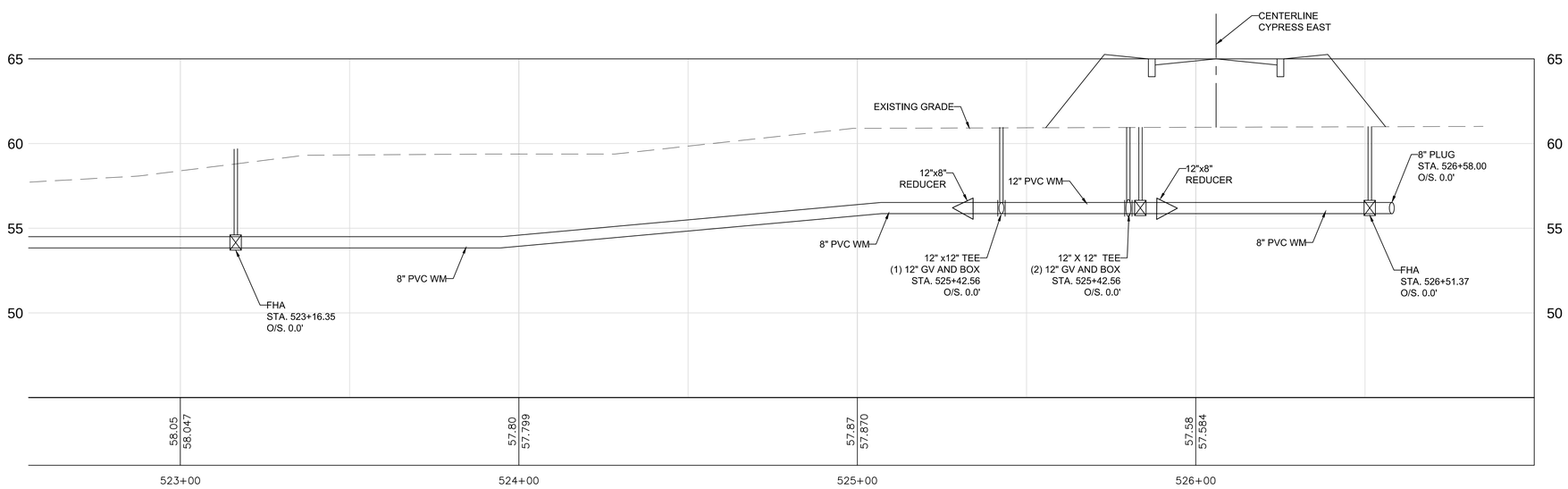

WATER MAIN AT RIGHT-OF-WAY

1" = 20' HORIZ.
1" = 5' VERT.

REVISIONS

NO.	DATE	DESCRIPTION	BY
1.	02-02-15	Revisions Per County Comments	ELR
2.	03-03-15	SWFWMD Resubmittal	ELR
3.	03-05-15	Access connection and Sidewalk	ELR
4.	08-07-15	County Resubmittal	ELR
5.	09-22-15	County Resubmittal - Address Comments Mod 1	ELR
6.			
7.			
8.			
9.			

Engineering ~ Planning
Environmental Science
4260 West Linebaugh Avenue
Tampa, Florida 33624
Phone: 813.265.3130 Fax: 813.265.6610
www.wraengineering.com CA 00007652

DRAWING
WATERMAIN AT R.O.W.
PLAN AND PROFILES
DESIGNED: JAC DRAWN: ELR APPROVED: JAC

PROJECT
CYPRESS CREEK
TOWN CENTER NORTH
JOB #: 0962 DATUM: NGVD 1929

JOSEPH A. CIMINO
FL P.E. # 67540

Original Date: 07-14-14
Sheet
C-618

2012 Water Resource Associates, Inc. Plot Date: 9/23/2015 12:01:53 PM CAD File Name: S:\~PROJECT FILES\0967 - PASCO 54 INC. - CCTC NORTH\CADD\PLANS\C-613_WM_PLAN_PROFILES_ROW.DWG

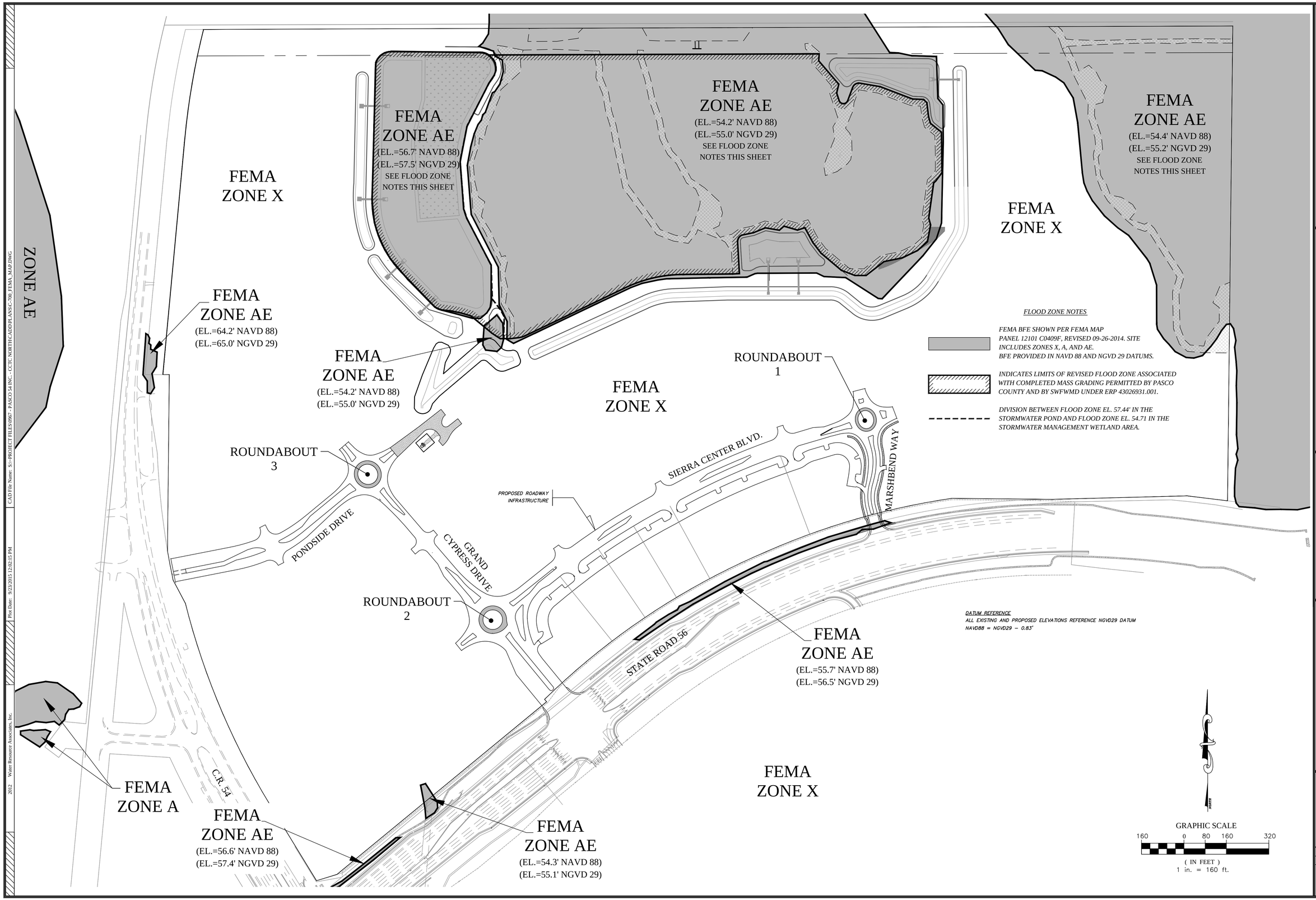

REVISIONS

NO.	DATE	DESCRIPTION	BY
1.	02-02-15	Revisions Per County Comments	ELR
2.	03-03-15	SWFWMD Resubmittal	ELR
3.	06-04-15	Access constructed Sidewalk	JAC
4.	08-07-15	County Resubmittal	ELR
5.	09-22-15	County Resubmittal - Address Comments Mod 1	ELR
6.			
7.			
8.			
9.			

Engineering ~ Planning
Environmental Science
4260 West Linebaugh Avenue
Tampa, Florida 33624
Phone: 813.265.3130 Fax: 813.265.6610
www.wraengineering.com CA 00007652

DRAWING
FLOOD ZONE MAP
DESIGNED: JAC DRAWN: ELR APPROVED: JAC

PROJECT
CYPRESS CREEK
TOWN CENTER NORTH
JOB #: 0967 DATUM: NGVD 1929

JOSEPH A. CIMINO
FL P.E. # 67540

Original Date: 07-14-14
Sheet
C-700

2012 Water Resource Associates, Inc. Plot Date: 9/23/2015 12:02:15 PM CAD File Name: S:\~PROJECT FILES\0967 - PASCO 54 INC. - CCTC NORTH\CADD\PLANS\C-700_FEMA_MAP.DWG