SITE DEVELOPMENT PLANS FOR:

CYPRESS CREEK TOWN CENTER
WESLEY CHAPEL, FLORIDA

PREPARED FOR:
PANDA RESTAURANT GROUP, INC.
1683 WALNUT GROVE AVE
ROSEMEAD, CA 91770
PHONE: (626) 372-8119

PREPARED BY:
grimail crawford inc.
Engineering • Planning • GIS

REGIONAL MAP

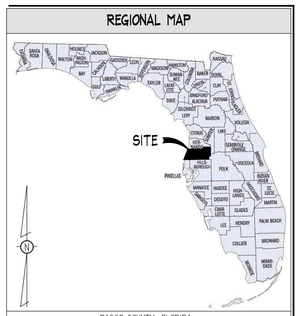

PASCO COUNTY, FLORIDA
N.T.S.

LOCATION MAP

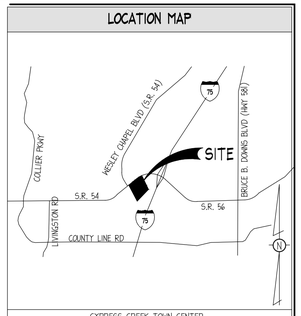

CYPRESS CREEK TOWN CENTER
N.T.S.

PROJECT CONTACTS

CURRENT OWNER
KPH
110 WERSTEINER WAY, #401
MELBOURNE BEACH, FLORIDA 32951
PHONE: (321) 243-4144

DEVELOPER
PANDA RESTAURANT GROUP, INC
MS. JANICE MORRISS
1683 WALNUT GROVE AVENUE
ROSEMEAD, CA 91770
PHONE: (626) 372-8292

CIVIL ENGINEER
GRIMAIL CRAWFORD, INC.
MR. JAMES NEFF, P.E.
1347 SOUTH RAILROAD AVENUE
CHIPLEY, FL 32428
PHONE: (850) 415-1040

ARCHITECT
RANDY REYNOLDS ARCHITECT
MR. RANDY REYNOLDS
1702 MILDARE COURT
THOMPSON STATION, TN 37064
PHONE: (615) 591-0675
FAX: (615) 591-0880

LAND SURVEYOR
TBD

MEP
KURZYNSKE & ASSOCIATES
825 3RD AVENUE SOUTH
NASHVILLE, TN 37210
PHONE: (615) 255-5203

SITE LIGHTING
VILLA LIGHTING SUPPLY
MR. JEFF CLAUSS
PHONE: (314) 633-0442
FAX: (314) 633-0443

MUNICIPAL SEWER AGENCY
PASCO COUNTY UTILITIES
MR. ED SIEDZIK
CIVIL ENGINEERING TECH
7530 LITTLE ROAD
NEW PORT RICHEY, FL 34654
PHONE: (727) 847-8145 X2539

MUNICIPAL WATER AGENCY
PASCO COUNTY UTILITIES
MR. ED SIEDZIK
CIVIL ENGINEERING TECH
7530 LITTLE ROAD
NEW PORT RICHEY, FL 34654
PHONE: (727) 847-8145 X2539

ELECTRIC
WITHLACOOCHEE RIVER ELECTRIC CO-OP
MR. COREY LITTLEFIELD
ONE PASCO CENTER DISTRICT OFFICE
30461 COMMERCE DRIVE
SAN ANTONIO, FL 33576
PHONE: (325) 588-5115 EXT. 1131

GAS
TECO PEOPLES GAS
MR. KEN MIRACOLA
1400 CHANNELSIDE DRIVE
TAMPA, FL 33605
PHONE: (813) 275-3770

TELEPHONE COMPANY
BRIGHTHOUSE
MS. JENNIFER FRANK
65 S. KELLER RD.
MAITLAND, FL 32810
PHONE: (407) 780-8996

LANDSCAPE ARCHITECT
MR. ALAN. HOLT, ASLA
P.O. BOX 2549
PANAMA CITY, FL 32402
PHONE: (850) 914-9006

SIGNAGE
ATLAS SIGN INDUSTRIES
MR. JOE JANELLE
PHONE: (561) 863-6659
FAX: (704) 788-3826

FIRE
PASCO COUNTY FIRE RESCUE
KIM BARKER
8731 CITIZENS DRIVE
NEW PORT RICHEY, FL 34654
PHONE: (727) 847-8127

PROJECT AREA

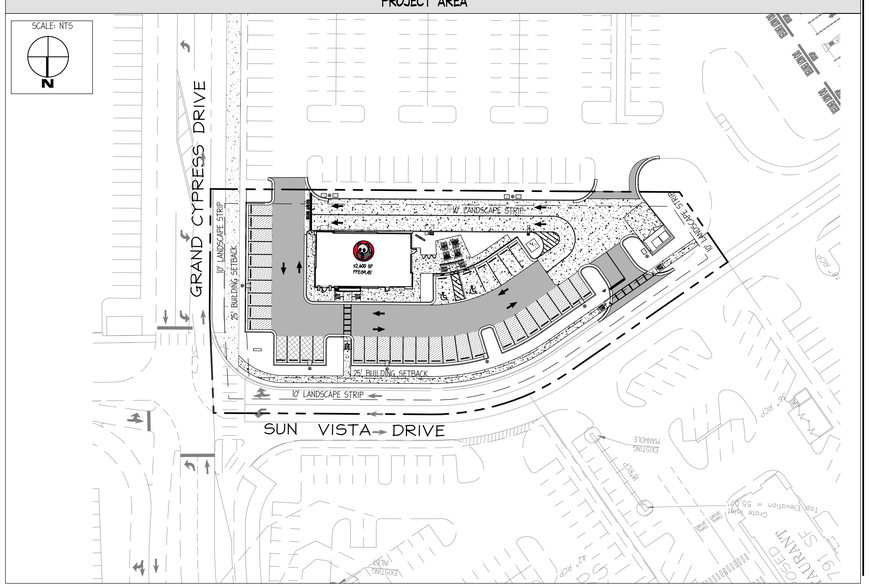

SITE INFORMATION

JURISDICTION: PASCO COUNTY, FLORIDA

DDP APPROVAL: JUNE 16, 2015

ZONING: MPUD (RZ-6288, NOV. 28 2004)
(DRO NO. 252)

EXISTING LAND USE: VACANT
PROPOSED LAND USE: RESTAURANT
FUTURE LAND USE: ROR

REQUIRED BUILDING SETBACKS:
FRONT(N): 25'
FRONT(E): 25'
SIDE(S): 0'
REAR(W): 0'

REQUIRED LANDSCAPE SETBACKS:
FRONT(N): 10'
FRONT(E): 10'
SIDE(S): 10'
REAR(W): 10'

REQUIRED PARKING:
1 SPACE PER 150 SF GROSS FLOOR AREA (2,600 S.F.), INCLUDING PATIO (400 S.F.)
21 SPACES

PROPOSED PARKING :
9' X 20' (REGULAR) = 36
9' X 20' (HC) = 2
TOTAL = 38

DRIVE AISLE: 24'

NUMBER OF UNITS: 1

BUILDING HEIGHT: 22' (1 STORY)

SITE AREA CALCULATIONS:
SITE: 1.07
PERVIOUS AREA: 0.20
IMPERVIOUS AREA: 0.87
DISTURBED AREA: 0.86

FLOOD HAZARD:
NO PORTION OF THIS PROPERTY IS LOCATED IN A SPECIAL FLOOD AREA AS PER F.I.R.M. MAP NO. 12101C0409F, 09/26/2014.

EXISTING INFORMATION:
TAKEN FROM DEVELOPER DESIGN FILES.

SITE LIGHTING:
PHOTOMETRICS DESIGNED BY OTHERS. POLE LOCATIONS ARE SHOWN FOR REFERENCE ONLY. CONTRACTOR SHALL VERIFY FINAL LOCATION OF POLES WITH PHOTOMETRIC PLAN AND OWNER PRIOR TO CONSTRUCTION.

THE GEOTECHNICAL INVESTIGATION PREPARED BY TBD DATED TBD AND ANY SUBSEQUENT ADDENDUMS IS CONSIDERED PART OF THE CONTRACT DOCUMENTS. IT IS THE CONTRACTOR'S RESPONSIBILITY TO COORDINATE THE REPORT'S RECOMMENDATIONS AND FINDINGS WITH THE OWNER, ENGINEER AND ARCHITECT PRIOR TO CONSTRUCTION. IMPLEMENTATION OF THE REPORT'S RECOMMENDATIONS MAY REQUIRE THE CONTRACTOR TO PERFORM ADDITIONAL WORK NOT SHOWN ON THE CIVIL PLANS INCLUDING BUT NOT LIMITED TO EXCAVATION, REMEDIATION, DEWATERING, COMPACTION ETC.

CONTRACTOR SHALL COORDINATE AND VERIFY LOCATION OF ALL SIGNAGE WITH OWNER PRIOR TO CONSTRUCTION.

CONTRACTOR SHALL COORDINATE AND ADJUST LOCATION OF LOOP DETECTORS TO AVOID UTILITY CONFLICTS PRIOR TO CONSTRUCTION.

CONTRACTOR SHALL INSTALL GENERAL UTILITY CONDUITS TO PLANTERS AROUND BUILDING AND PATIO. SEE ARCHITECTURAL/MEP PLANS FOR CONTINUATION.

CONTRACTOR SHALL FIELD VERIFY ALL EXISTING UTILITIES (LOCATIONS AND ELEVATIONS) PRIOR TO STARTING CONSTRUCTION AND ALERT ENGINEER TO ANY DISCREPANCIES IMMEDIATELY.

24-HOUR CONTACT:
MS. JANICE MORRISS
626.372.8292

Sunshine811
Always call 811 before you dig.

SHEET INDEX

NO.	TITLE	ISSUE 01 - SUBMIT TO PASCO COUNTY 06/17/2015	ISSUE 02 - RESUBMIT TO PASCO COUNTY 10/07/2015					
C01.0	COVER SHEET	●	●					
C01.1	GENERAL NOTES	●	●					
C01.2	OVERALL PLAN (OVERALL PLAN)	●	●					
C03.0	SITE PLAN	●	●					
C03.1	BUILDING AREA SITE DETAIL PLAN	●	●					
C03.2	STAKING PLAN	●	●					
C03.3	HARDSCAPE DETAILS I	●	●					
C03.4	HARDSCAPE DETAILS II	●	●					
C03.5	HARDSCAPE DETAILS III	●	●					
C04.0	UTILITY PLAN	●	●					
C04.1	BUILDING UTILITY DETAIL	●	●					
C04.2	UTILITY DETAILS I	●	●					
C04.3	UTILITY DETAILS II	●	●					
C04.4	UTILITY DETAILS III	●	●					
C04.5	UTILITY DETAILS IV	●	●					
C04.6	UTILITY DETAILS V	●	●					
C04.7	PROFILES I	●	●					
C04.8	PROFILES II	●	●					
C05.0	GRADING & DRAINAGE PLAN	●	●					
C05.1	BUILDING AREA GRADING DETAIL PLAN	●	●					
C06.0	ESPC PHASE I PLAN	●	●					
C06.1	ESPC PHASE II PLAN	●	●					
C06.2	ESPC PHASE III PLAN	●	●					
C06.3	ESPC DETAILS I	●	●					
C06.4	ESPC DETAILS II	●	●					
C06.5	ESPC DETAILS III	●	●					
L01.0	LANDSCAPE PLAN (BY OTHERS)	●	●					
L01.1	LANDSCAPE DETAILS (BY OTHERS)	●	●					
SL01	SITE LIGHTING PLAN (BY OTHERS)	●	●					

GRIMAIL CRAWFORD, INC.
ENGINEERING • PLANNING • GIS
3650 MANSELL ROAD
SUITE 495
ALPHARETTA, GA 30022
770.437.8850 844.833.6661 FAX
www.gc-inc.com

PANDA EXPRESS
CYPRESS CREEK TOWN CENTER
GRAND CYPRESS DRIVE
WESLEY CHAPEL, FLORIDA

PLANS FOR:

CLIENT:
PANDA RESTAURANT GROUP, INC.
1683 WALNUT GROVE AVE
ROSEMEAD, CA 91770
PHONE: (626) 372-8119

REVISION HISTORY

--/--/----	--/--/----
--/--/----	--/--/----
--/--/----	--/--/----
--/--/----	--/--/----
--/--/----	--/--/----
--/--/----	--/--/----
--/--/----	--/--/----
--/--/----	--/--/----

THE CIVIL ENGINEER REGULARLY UPDATES ELECTRONIC FILES DURING THE DEVELOPMENT OF A PROJECT. AS A RESULT, THE DATA INCLUDED IN ANY CAD FILE OR DRAWING PRIOR TO ITS FINAL RELEASE DOES NOT NECESSARILY REFLECT THE COMPLETE SCOPE OR CONTENT AS DEFINED IN THE CONTRACT. THE CONTENTS IN THESE FILES MAY THEREFORE BE PRELIMINARY, INCOMPLETE WORK IN PROGRESS, AND SUBJECT TO CHANGE. FURTHERMORE, THE INFORMATION CONTAINED HEREIN IS THE EXCLUSIVE PROPERTY OF THE CIVIL ENGINEER. THE ORIGINAL IDEAS REPRESENTED HERE BY THIS INFORMATION SHALL NOT BE USED, ALTERED, OR REPRODUCED IN ANY MANNER WITHOUT THE EXPRESSED WRITTEN CONSENT OF THE CIVIL ENGINEER. THESE PLANS ARE SUBJECT TO FEDERAL COPYRIGHT LAWS. ANY USE OF SAME WITHOUT EXPRESSED WRITTEN PERMISSION OF THE CIVIL ENGINEER IS PROHIBITED.

GCI PROJ #	140283
DWG NAME	140283 C01.DWG
ISSUE DATE	10/07/15
GCI PROJ MGR	JMP

COVER SHEET

C01.0
SHEET NUMBER

ISSUED FOR PERMITTING

FLOOD INSURANCE RATE MAP FIRMETTE

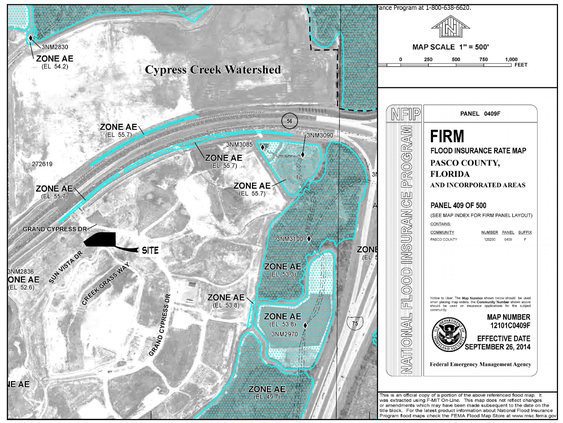

FEMA FLOOD INSURANCE RATE MAP 12101C0409F, DATED 09/26/2014
N.T.S.

SOILS MAP

26- NARCOOSSEE FINE SAND, 0-2% SLOPES
N.T.S.

EXISTING CONDITIONS LEGEND

DESCRIPTION	LINETYPE/SYMBOL
IRRIGATION CONTROL VALVE	ICV
IRON PIN FOUND	IPF
IRON PIN SET (1/2" RB)	IPS
OPEN TOP PIPE	OT
CRIMP TOP PIPE	CT
CONCRETE MONUMENT FOUND	CMF
NAIL AND CAP	N & C
REBAR	RB
POWER POLE	PP
TELEPHONE POLE	TP
LAND LOT	LL
LAND LOT LINE	LLL
POINT OF BEGINNING	POB
BUILDING LINE	BL
CENTER LINE	CL
PROPERTY LINE	PL
FIRE HYDRANT	FH
CATCH BASIN	CB
DROP INLET	DI
HEADWALL	HW
JUNCTION BOX	JB
DRAINAGE EASEMENT	DE
WATER METER	WM
WATER VALVE	WV
GAS VALVE	GV
MANHOLE	MH
RIGHT-OF-WAY MONUMENT FOUND	⊠
GAS LINE	GAS
WATER LINE	WAT
SANITARY SEWER LINE	SAN
STORM DRAINAGE PIPE	
OVERHEAD ELECTRIC LINE	OH ELE
OVERHEAD ELECTRIC/TELEPHONE/TV LINE	OH E/T/TV
OVERHEAD ELECTRIC/TELEPHONE LINE	OH E/T

GENERAL NOTES

1. GRIMAIL CRAWFORD, INC. (GCI) REGULARLY UPDATES ELECTRONIC FILES DURING THE DEVELOPMENT OF A PROJECT. AS A RESULT, THE DATA INCLUDED IN ANY CAD FILE OR DRAWING PRIOR TO ITS FINAL RELEASE DOES NOT NECESSARILY REFLECT THE COMPLETE SCOPE OR CONTENT AS DEFINED IN THE CONTRACT. THE CONTENTS IN THESE FILES MAY THEREFORE BE PRELIMINARY, INCOMPLETE WORK IN PROGRESS, AND SUBJECT TO CHANGE. FURTHERMORE, THE INFORMATION CONTAINED HEREIN IS THE EXCLUSIVE PROPERTY OF GCI. THE ORIGINAL IDEAS REPRESENTED HERE BY THIS INFORMATION SHALL NOT BE USED, ALTERED, OR REPRODUCED IN ANY MANNER WITHOUT THE EXPRESSED WRITTEN CONSENT OF GCI.
2. DEVIATIONS FROM THESE PLANS AND NOTES WITHOUT PRIOR CONSENT OF THE OWNER, HIS REPRESENTATIVE, OR THE ENGINEER MAY CAUSE THE WORK TO BE UNACCEPTABLE.
3. THE DRAWINGS AND SPECIFICATIONS ARE INTENDED TO COVER A COMPLETE PROJECT, READY TO USE, AND ALL ITEMS NECESSARY FOR A COMPLETE AND WORKABLE JOB SHALL BE FURNISHED AND INSTALLED. THIS INCLUDES ALL STRIPING AND SIGNAGE.
4. IN ACCORDANCE WITH GENERALLY ACCEPTED CONSTRUCTION PRACTICES, THE CONTRACTOR WILL BE SOLELY AND COMPLETELY RESPONSIBLE FOR CONDITIONS OF THE JOB SITE, INCLUDING SAFETY OF ALL PERSONS AND PROPERTY DURING PERFORMANCE OF THE WORK. THIS REQUIREMENT WILL APPLY CONTINUOUSLY AND WILL NOT BE LIMITED TO NORMAL WORKING HOURS. THE DUTY OF THE OWNER TO CONDUCT CONSTRUCTION REVIEW OF THE CONTRACTOR'S PERFORMANCE IS NOT INTENDED TO INCLUDE REVIEW OF THE ADEQUACY OF THE CONTRACTOR'S SAFETY MEASURES, IN, ON OR NEAR THE CONSTRUCTION SITE. CONTRACTOR WILL BE RESPONSIBLE FOR PROVIDING AND MAINTAINING ALL BARRICADES, WARNING SIGNS, FLASHING LIGHTS AND TRAFFIC CONTROL DEVICES DURING CONSTRUCTION. CONTRACTOR TO COMPLY WITH ALL OSHA REGULATIONS REQUIREMENTS AND SAFETY MEETING REQUIREMENTS.
5. THE ENGINEER SHALL NOT BE RESPONSIBLE FOR CONSTRUCTION, MEANS, METHODS, TECHNIQUES, OR PROCEDURES UTILIZED BY THE CONTRACTOR, NOR FOR THE SAFETY OF PUBLIC OR CONTRACTOR'S EMPLOYEES, OR FOR THE FAILURE OF THE CONTRACTOR TO CARRY OUT THE WORK IN ACCORDANCE WITH THE CONTRACT DOCUMENTS.

PROPOSED LEGEND

GENERAL	LINETYPE/SYMBOL	REFERENCE
RIGHT-OF-WAY/PROPERTY LINE		
CENTERLINE		
LIMITS OF CONSTRUCTION	L	
DETAIL REFERENCE		
ADDENDUM AND/OR REVISION REFERENCE		

SITE/HARDSCAPE	LINETYPE/SYMBOL	REFERENCE
CHAIN LINK FENCE		NOT APPLICABLE
RETAINING WALL		DESIGN/BUILD BY CONTRACTOR
SCREEN WALL/DUMPSTER ENCLOSURE		SEE ARCHITECTURAL PLANS FOR DETAIL.
CURB & GUTTER		DETAIL 6, SHEET C03.3
HEADER CURB		DETAIL 6, SHEET C03.3
CONCRETE SIDEWALK		DETAIL 1, SHEET C03.4

UTILITY	LINETYPE/SYMBOL	REFERENCE
DOMESTIC WATER LINE	DW DW	1 1/2" TYPE "K" COPPER
FIRE WATER LINE	FW FW	NOT APPLICABLE
BUILDING FIRE SPRINKLER LINE	FWS FWS	NOT APPLICABLE
IRRIGATION WATER LINE	IRR IRR	1" PVC
WATER METER (WM)	WM	1 1/2"
IRRIGATION METER (IRR)	IRR	1"
BACKFLOW PREVENTOR (RPZ)	RPZ	DETAIL 1, SHEET C04.2
FIRE VAULT (DDC)	DDC	NOT APPLICABLE
DC BACKFLOW PREVENTER		NOT APPLICABLE
WATER TAP OR TEE		**
GATE VALVE (GV)	GV	**
THRUST BLOCK (TB)	TB	DETAIL 1, SHEET C04.6
FIRE HYDRANT (FH)	FH	NOT APPLICABLE
FIRE DEPARTMENT CONNECTION (FDC)	FDC	NOT APPLICABLE
SANITARY SEWER (SS)	SS SS	SEE PLANS
SANITARY MANHOLE (SSMH)		NOT APPLICABLE
GENERAL CLEAN OUT (CO)	CO	DETAIL 6, SHEET C04.2
GREASE TRAP (GT)	SS SS	**DETAIL 7, SHEET C04.2
SANITARY STRUCTURE NUMBER	S2	SEE PLANS
UNDERGROUND ELECTRIC LINE	UGE UGE	(2) 4" PVC CONDUITS
POST INDICATOR VALVE	PIV	NOT APPLICABLE
SITE LIGHTING POLE		PHOTOMETRICS BY OTHERS. SEE SHEET SL01.0
TRANSFORMER PAD	T	DETAIL 5, SHEET C04.3
METER/CT PEDESTAL	CT	**
UNDERGROUND TELEPHONE LINE	UGT UGT	(2) 2" PVC CONDUITS
GENERAL UTILITY CONDUIT	GU GU	(2) 4" PVC CONDUITS
GAS LINE	G	**
GAS METERS	G	**
DATA LINE	DATA	(2) 4" PVC CONDUITS

** ALL UTILITIES SHALL BE INSTALLED ACCORDING TO UTILITY PROVIDERS AND JURISDICTION STANDARDS AND SPECIFICATIONS.

GRADING/DRAINAGE	LINETYPE/SYMBOL	REFERENCE
GRADE	1000	SEE PLANS
SPOT ELEVATION	× 1000.00	SEE PLANS
STORM DRAIN		SEE PLANS
HEADWALL (HW) / FLARED END SECTION (FES)		**
DROP INLET (GRATE)		DETAIL 4, SHEET C04.3
CURB INLET (GRATE AND HOOD)		DETAIL 1, SHEET C04.3
JUNCTION BOX (JB) / OCS		DETAIL 1, SHEET C04.4
CATCH BASIN (SINGLE WING)		**
PEDESTAL TOP		**
STORM STRUCTURE NUMBER	A3	SEE PLANS

ESPC BMP	LINETYPE/SYMBOL	REFERENCE
CONSTRUCTION EXIT		SHEET C06.3
SF SEDIMENT FENCE		SHEET C06.3
IP INLET PROTECTION		SHEET C06.5
OP OUTLET PROTECTION		NOT APPLICABLE
TS TEMPORARY SEEDING	TS	SHEET C06.4
PS PERMANENT SEEDING	PS	SHEET C06.4
TREE PROTECTION FENCE	TPF	SHEET L01.1
LIMITS OF CONSTRUCTION	L	

SEE EXISTING CONDITIONS/SURVEY AND LANDSCAPE/TREE PROTECTION PLANS FOR LEGENDS SPECIFIC TO THOSE SHEETS

GRIMAIL CRAWFORD, INC.
ENGINEERING · PLANNING · GIS
3650 MANSELL ROAD
SUITE 495
ALPHARETTA, GA 30022
770.437.8850 844.833.6661 FAX
www.gc-inc.com

PANDA EXPRESS
CYPRESS CREEK TOWN CENTER
GRAND CYPRESS DRIVE
WESLEY CHAPEL, FLORIDA

PANDA EXPRESS · CHINESE KITCHEN

PLANS FOR:

CLIENT:
PANDA RESTAURANT GROUP, INC.
1683 WALNUT GROVE AVE
ROSEMEAD, CA 91770
PHONE: (626) 372-8119

REVISION HISTORY

--/--/----	--/--/----
--/--/----	--/--/----
--/--/----	--/--/----
--/--/----	--/--/----
--/--/----	--/--/----
--/--/----	--/--/----

THE CIVIL ENGINEER REGULARLY UPDATES ELECTRONIC FILES DURING THE DEVELOPMENT OF A PROJECT. AS A RESULT, THE DATA INCLUDED IN ANY CAD FILE OR DRAWING PRIOR TO ITS FINAL RELEASE DOES NOT NECESSARILY REFLECT THE COMPLETE SCOPE OR CONTENT AS DEFINED IN THE CONTRACT. THE CONTENTS IN THESE FILES MAY THEREFORE BE PRELIMINARY, INCOMPLETE WORK IN PROGRESS, AND SUBJECT TO CHANGE. FURTHERMORE, THE INFORMATION CONTAINED HEREIN IS THE EXCLUSIVE PROPERTY OF THE CIVIL ENGINEER. THE ORIGINAL IDEAS REPRESENTED HERE BY THIS INFORMATION SHALL NOT BE USED, ALTERED, OR REPRODUCED IN ANY MANNER WITHOUT THE EXPRESSED WRITTEN CONSENT OF THE CIVIL ENGINEER. THESE PLANS ARE SUBJECT TO FEDERAL COPYRIGHT LAWS. ANY USE OF SAFE WITHOUT EXPRESSED WRITTEN PERMISSION OF THE CIVIL ENGINEER IS PROHIBITED.

GCI PROJ #	140283
DWG NAME	140283 C01.DWG
ISSUE DATE	10/07/15
GCI PROJ MGR	JMP

GENERAL NOTES

C01.1
SHEET NUMBER

ISSUED FOR PERMITTING

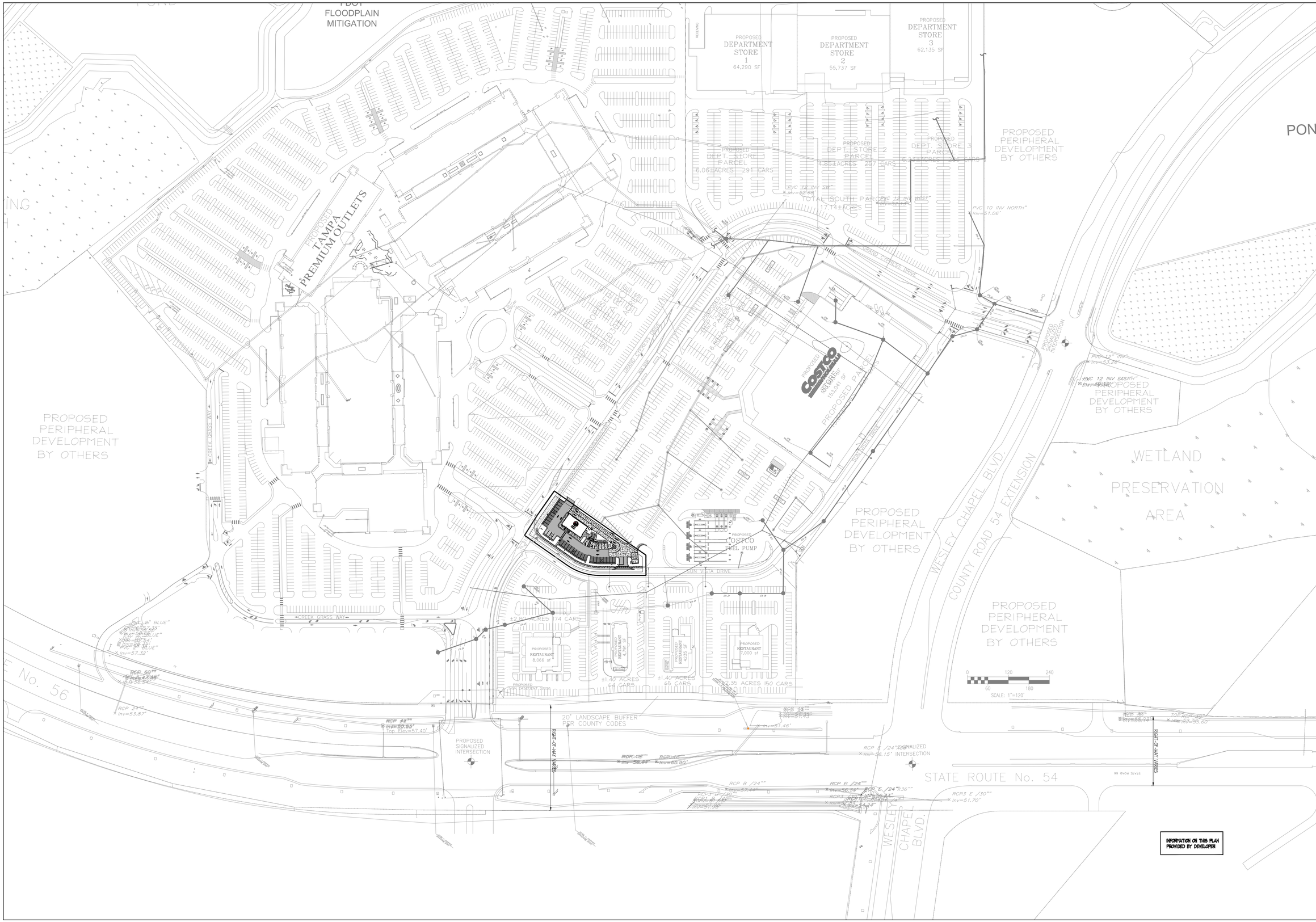

CYPRESS CREEK TOWN CENTER

PASCO COUNTY, FLORIDA

PRELIMINARY SITE PLAN

The Richard E. Jacobs Group
25425 Center Ridge Road Cleveland, Ohio 44140-4122
Phone: 216-871-4800

DRAWN BY: waf	DATE: 03/04/15
SCALE: no scale	JOB NUMBER:
REVISED:	DATE: 03/05/15
CAD FILENAME:	
DRAWING NUMBER: C01.2	

HYBRID SITE PLAN

INFORMATION ON THIS PLAN PROVIDED BY DEVELOPER

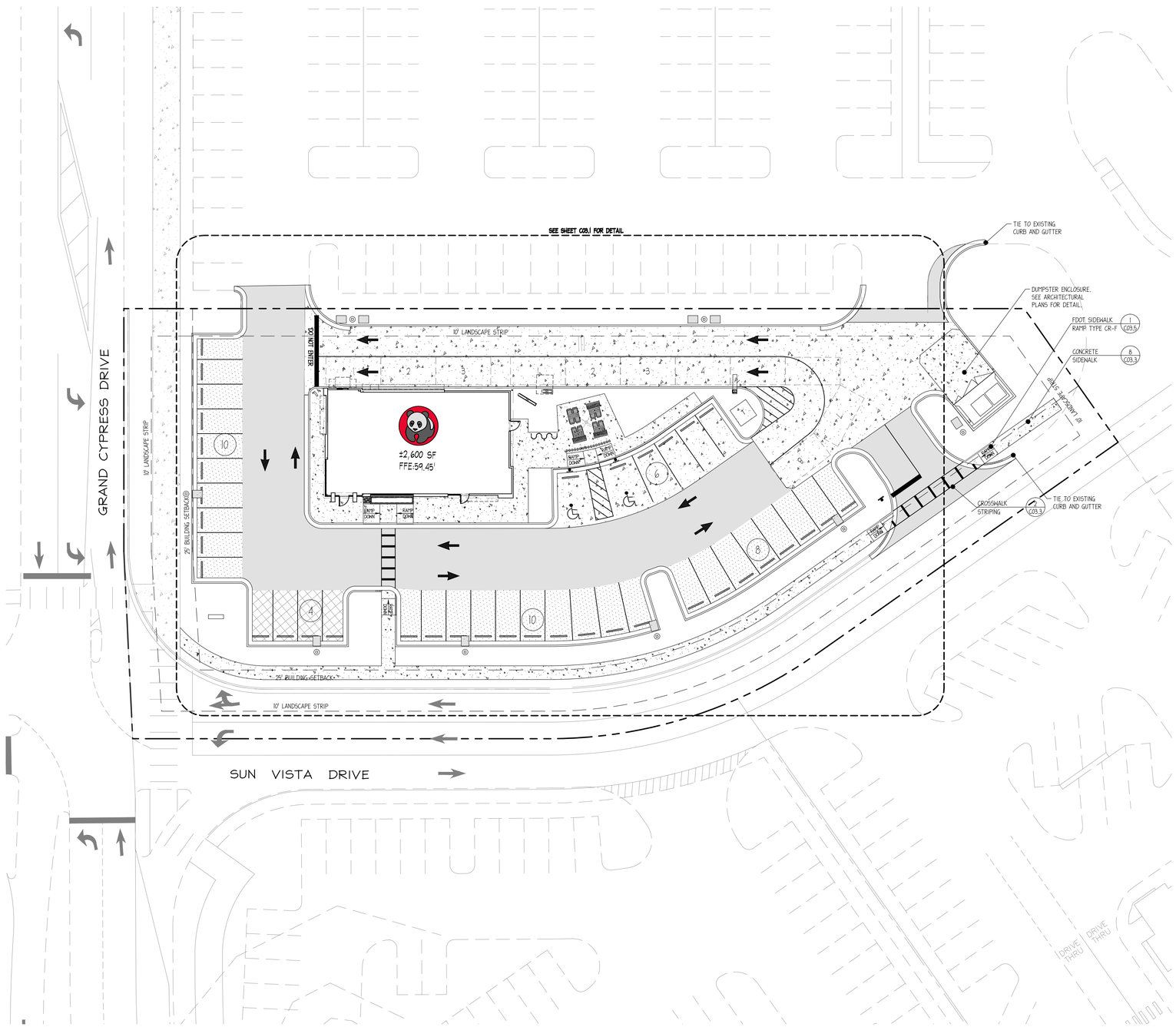

PAVING LEGEND

- HEAVY DUTY PAVEMENT SECTION: DETAIL 2A, SHEET C03.4
- LIGHT DUTY PAVEMENT SECTION: DETAIL 2B, SHEET C03.4
- CONCRETE SECTIONS:
  SIDEWALK: DETAIL 8, SHEET C03.3
  DUMPSTER APPROACH PAD: DETAIL 1B, SHEET C03.4
  DRIVE THRU: DETAIL 1B, SHEET C03.4
  PARKING AREA: DETAIL 1A, SHEET C03.4
- PERVIOUS PAVER DETAIL 2, SHEET C03.5

LOCATION MAP

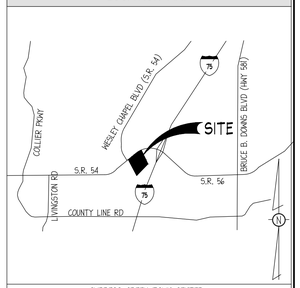

CYPRESS CREEK TOWN CENTER
N.T.S.

SITE NOTES

1. THE CONTRACTOR SHALL REMOVE AND DISPOSE OF ALL EXISTING IMPROVEMENTS AND TREES AND OTHER DEBRIS WITHIN THE LIMITS OF THE WORK FROM THE SITE. ON SITE BURIAL OF TREES AND OTHER DEBRIS WILL NOT BE ALLOWED. THERE ARE NO KNOWN INERT BURY PITS ON THE SITE AND NONE WILL BE ALLOWED DURING CONSTRUCTION OF THE PROJECT.
2. ALL WORK SHALL COMPLY WITH PASCO COUNTY, STATE OF FLORIDA, AND FEDERAL CODES AND ALL NECESSARY LICENSES AND PERMITS SHALL BE OBTAINED BY THE CONTRACTOR AT HIS EXPENSE UNLESS PREVIOUSLY OBTAINED BY THE OWNER.
3. ALL WORK SHALL BE PERFORMED IN A FINISHED AND WORKMANLIKE MANNER TO THE ENTIRE SATISFACTION OF THE OWNER, AND IN ACCORDANCE WITH THE BEST RECOGNIZED TRADE PRACTICES.
4. ALL MATERIALS SHALL BE NEW UNLESS USED OR SALVAGED MATERIALS ARE AUTHORIZED BY THE OWNER PRIOR TO USE.
5. ALL WORK PERFORMED ON CITY, COUNTY, AND/OR STATE OR FEDERAL RIGHT-OF-WAY SHALL BE IN STRICT CONFORMANCE WITH APPLICABLE STANDARDS AND SPECIFICATIONS OF THE APPROPRIATE GOVERNING AGENCIES.
6. BASE COURSE MATERIALS, EQUIPMENT, METHODS OF CONSTRUCTION AND WORKMANSHIP SHALL CONFORM TO STATE OF FLORIDA TRANSPORTATION STANDARD SPECIFICATIONS, CURRENT EDITION.
7. ALL BUILDING DIMENSIONS SHALL BE CHECKED AND COORDINATED WITH THE ARCHITECTURAL PLANS PRIOR TO COMMENCEMENT OF CONSTRUCTION.
8. SEE SHEET C01.1 FOR GENERAL NOTES.

SITE INFORMATION

JURISDICTION: PASCO COUNTY, FLORIDA

DDP APPROVAL: JUNE 16, 2015

ZONING: MPUD (RZ-6288, NOV. 28 2004)
(DRO NO. 252)

EXISTING LAND USE: VACANT
PROPOSED LAND USE: RESTAURANT
FUTURE LAND USE: ROR

REQUIRED BUILDING SETBACKS:
FRONT(N): 25'
FRONT(E): 25'
SIDE(S): 0'
REAR(W): 0'

REQUIRED LANDSCAPE SETBACKS:
FRONT(N): 10'
FRONT(E): 10'
SIDE(S): 10'
REAR(W): 10'

REQUIRED PARKING:
1 SPACE PER 150 SF GROSS FLOOR AREA (2,600 S.F.), INCLUDING PATIO (400 S.F.)
21 SPACES

PROPOSED PARKING :
9' X 20' (REGULAR) = 36
9' X 20' (HC) = 2
TOTAL = 38

DRIVE AISLE: 24'

NUMBER OF UNITS: 1

BUILDING HEIGHT: 22' (1 STORY)

SITE AREA CALCULATIONS:
SITE: 1.07
PERVIOUS AREA: 0.20
IMPERVIOUS AREA: 0.87
DISTURBED AREA: 0.86

FLOOD HAZARD:
NO PORTION OF THIS PROPERTY IS LOCATED IN A SPECIAL FLOOD AREA AS PER F.I.R.M. MAP NO. 12101C0409F, 09/26/2014.

EXISTING INFORMATION:
TAKEN FROM DEVELOPER DESIGN FILES.

SITE LIGHTING:
PHOTOMETRICS DESIGNED BY OTHERS. POLE LOCATIONS ARE SHOWN FOR REFERENCE ONLY. CONTRACTOR SHALL VERIFY FINAL LOCATION OF POLES WITH PHOTOMETRIC PLAN AND OWNER PRIOR TO CONSTRUCTION.

24-HOUR CONTACT:
MS. JANICE MORRISS
626.372.8292

Sunshine811
Always call 811 before you dig.

N
GRAPHIC SCALE (in feet): 1" = 20'
10' 0' 20' 40'

GRIMAIL CRAWFORD, INC.
ENGINEERING · PLANNING · GIS
3650 MANSELL ROAD
SUITE 495
ALPHARETTA, GA 30022
770.437.8850 844.833.6661 FAX
www.gc-inc.com

PANDA EXPRESS
CYPRESS CREEK TOWN CENTER
GRAND CYPRESS DRIVE
WESLEY CHAPEL, FLORIDA

PLANS FOR:

CLIENT:
PANDA RESTAURANT GROUP, INC.
1683 WALNUT GROVE AVE
ROSEMEAD, CA 91770
PHONE: (626) 372-8119

REVISION HISTORY

--/--/----	--/--/----
--/--/----	--/--/----
--/--/----	--/--/----
--/--/----	--/--/----
--/--/----	--/--/----
--/--/----	--/--/----
--/--/----	--/--/----

THE CIVIL ENGINEER REGULARLY UPDATES ELECTRONIC FILES DURING THE DEVELOPMENT OF A PROJECT. AS A RESULT, THE DATA INCLUDED IN ANY CAD FILE OR DRAWING PRIOR TO ITS FINAL RELEASE DOES NOT NECESSARILY REFLECT THE COMPLETE SCOPE OR CONTENT AS DEFINED IN THE CONTRACT. THE CONTENTS IN THESE FILES MAY THEREFORE BE PRELIMINARY, INCOMPLETE WORK IN PROGRESS, AND SUBJECT TO CHANGE. FURTHERMORE, THE INFORMATION CONTAINED HEREIN IS THE EXCLUSIVE PROPERTY OF THE CIVIL ENGINEER. THE ORIGINAL IDEAS REPRESENTED HERE BY THIS INFORMATION SHALL NOT BE USED, ALTERED, OR REPRODUCED IN ANY MANNER WITHOUT THE EXPRESSED WRITTEN CONSENT OF THE CIVIL ENGINEER. THESE PLANS ARE SUBJECT TO FEDERAL COPYRIGHT LAWS. ANY USE OF SAME WITHOUT EXPRESSED WRITTEN PERMISSION OF THE CIVIL ENGINEER IS PROHIBITED.

GCI PROJ #	140283
DWG NAME	140283 C03.DWG
ISSUE DATE	10/07/15
GCI PROJ MGR	JHP

SITE PLAN

C03.0
SHEET NUMBER

ISSUED FOR PERMITTING

PAVING LEGEND

- HEAVY DUTY PAVEMENT SECTION: DETAIL 2A, SHEET C03.4
- LIGHT DUTY PAVEMENT SECTION: DETAIL 2B, SHEET C03.4
- CONCRETE SECTIONS:
  SIDEWALK: DETAIL 8, SHEET C03.3
  DUMPSTER APPROACH PAD: DETAIL 1B, SHEET C03.4
  DRIVE THRU: DETAIL 1B, SHEET C03.4
  PARKING AREA: DETAIL 1A, SHEET C03.4
- PERVIOUS PAVER DETAIL 2, SHEET C03.5

LOCATION MAP

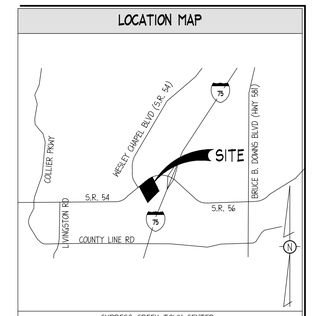

CYPRESS CREEK TOWN CENTER
N.T.S.

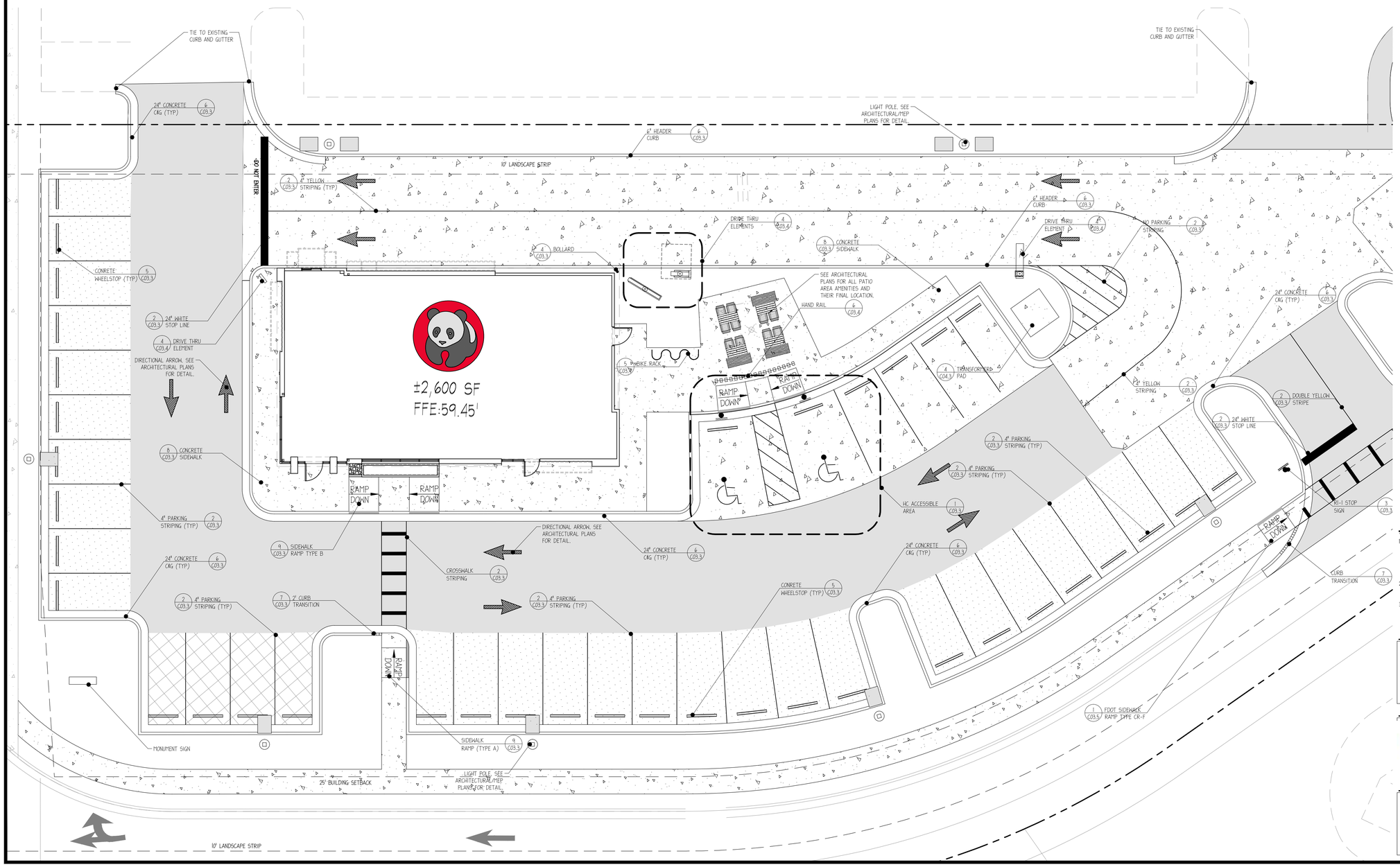

SITE INFORMATION

JURISDICTION: PASCO COUNTY, FLORIDA

DDP APPROVAL: JUNE 16, 2015

ZONING: MPUD (RZ-6288, NOV. 28 2004)
(DRO NO. 252)

EXISTING LAND USE: VACANT
PROPOSED LAND USE: RESTAURANT
FUTURE LAND USE: ROR

REQUIRED BUILDING SETBACKS:
FRONT(N): 25'
FRONT(E): 25'
SIDE(S): 0'
REAR(W): 0'

REQUIRED LANDSCAPE SETBACKS:
FRONT(N): 10'
FRONT(E): 10'
SIDE(S): 10'
REAR(W): 10'

REQUIRED PARKING:
1 SPACE PER 150 SF GROSS FLOOR AREA (2,600 S.F.), INCLUDING PATIO (400 S.F.)
21 SPACES

PROPOSED PARKING :
9' X 20' (REGULAR) = 34
18' X 20' (HC) = 2
TOTAL = 36

DRIVE AISLE: 24'

NUMBER OF UNITS: 1

BUILDING HEIGHT: 22' (1 STORY)

SITE AREA CALCULATIONS:
SITE: 1.07
PERVIOUS AREA: 0.20
IMPERVIOUS AREA: 0.87
DISTURBED AREA: 0.86

FLOOD HAZARD:
NO PORTION OF THIS PROPERTY IS LOCATED IN A SPECIAL FLOOD AREA AS PER F.I.R.M. MAP NO. 12101C0409F, 09/26/2014.

EXISTING INFORMATION:
TAKEN FROM DEVELOPER DESIGN FILES.

SITE LIGHTING:
PHOTOMETRICS DESIGNED BY OTHERS. POLE LOCATIONS ARE SHOWN FOR REFERENCE ONLY. CONTRACTOR SHALL VERIFY FINAL LOCATION OF POLES WITH PHOTOMETRIC PLAN AND OWNER PRIOR TO CONSTRUCTION.

BUILDING AREA NOTES

1. MAINTAIN ACCESS FOR EMERGENCY VEHICLES AROUND AND TO ALL BUILDINGS UNDER CONSTRUCTION; i.e. IN TIMES OF RAIN OR MUD, ROADS SHALL BE PASSABLE TO EMERGENCY VEHICLES BY BEING PAVED OR HAVING A CRUSHED STONE BASE ETC... WITH A MINIMUM WIDTH OF 20 FEET. THE ACCESS TO BUILDINGS HAVING SPRINKLER OR STANDPIPE SYSTEMS SHALL BE TO WITHIN 40 FEET OF THE FIRE DEPARTMENT CONNECTION (NFPA 1141 3-1).
2. CONTRACTOR TO PROVIDE POSITIVE DRAINAGE AWAY FROM BUILDING IN ALL AREAS AROUND BUILDING. INSTALL FRENCH DRAIN IN LANDSCAPED AREAS ADJACENT TO BUILDING AND CONNECT TO DRAINAGE SYSTEM.
3. SEE SHEET C01.1 FOR GENERAL NOTES.

24-HOUR CONTACT:
MS. JANICE MORRISS
626.372.8292

Sunshine811
Always call 811 before you dig.

GRAPHIC SCALE (in feet): 1" = 10'
5' 0' 10' 20'
N

GRIMAIL CRAWFORD, INC.
ENGINEERING - PLANNING - GIS
3650 MANSELL ROAD
SUITE 495
ALPHARETTA, GA 30022
770.437.8850 844.833.6661 FAX
www.gc-inc.com

PANDA EXPRESS
CYPRESS CREEK TOWN CENTER
GRAND CYPRESS DRIVE
WESLEY CHAPEL, FLORIDA

PANDA EXPRESS CHINESE KITCHEN

PLANS FOR:

CLIENT:
PANDA RESTAURANT GROUP, INC.
1683 WALNUT GROVE AVE
ROSEMEAD, CA 91770
PHONE: (626) 372-8119

REVISION HISTORY

--/--/----	--/--/----
--/--/----	--/--/----
--/--/----	--/--/----
--/--/----	--/--/----
--/--/----	--/--/----
--/--/----	--/--/----
--/--/----	--/--/----

THE CIVIL ENGINEER REGULARLY UPDATES ELECTRONIC FILES DURING THE DEVELOPMENT OF A PROJECT, AS A RESULT, THE DATA INCLUDED IN ANY CAD FILE OR DRAWING PRIOR TO ITS FINAL RELEASE DOES NOT NECESSARILY REFLECT THE COMPLETE SCOPE OR CONTENT AS DEFINED IN THE CONTRACT. THE CONTENTS IN THESE FILES MAY THEREFORE BE PRELIMINARY, INCOMPLETE WORK IN PROGRESS, AND SUBJECT TO CHANGE. FURTHERMORE, THE INFORMATION CONTAINED HEREIN IS THE EXCLUSIVE PROPERTY OF THE CIVIL ENGINEER. THE ORIGINAL IDEAS REPRESENTED HERE BY THIS INFORMATION SHALL NOT BE USED, ALTERED, OR REPRODUCED IN ANY MANNER WITHOUT THE EXPRESSED WRITTEN CONSENT OF THE CIVIL ENGINEER. THESE PLANS ARE SUBJECT TO FEDERAL COPYRIGHT LAWS. ANY USE OF SAME WITHOUT EXPRESSED WRITTEN PERMISSION OF THE CIVIL ENGINEER IS PROHIBITED.

GCI PROJ #	140283
DWG NAME	140283 C03.DWG
ISSUE DATE	10/07/15
GCI PROJ MGR	JMP

BUILDING AREA SITE DETAIL PLAN

C03.1
SHEET NUMBER

ISSUED FOR PERMITTING

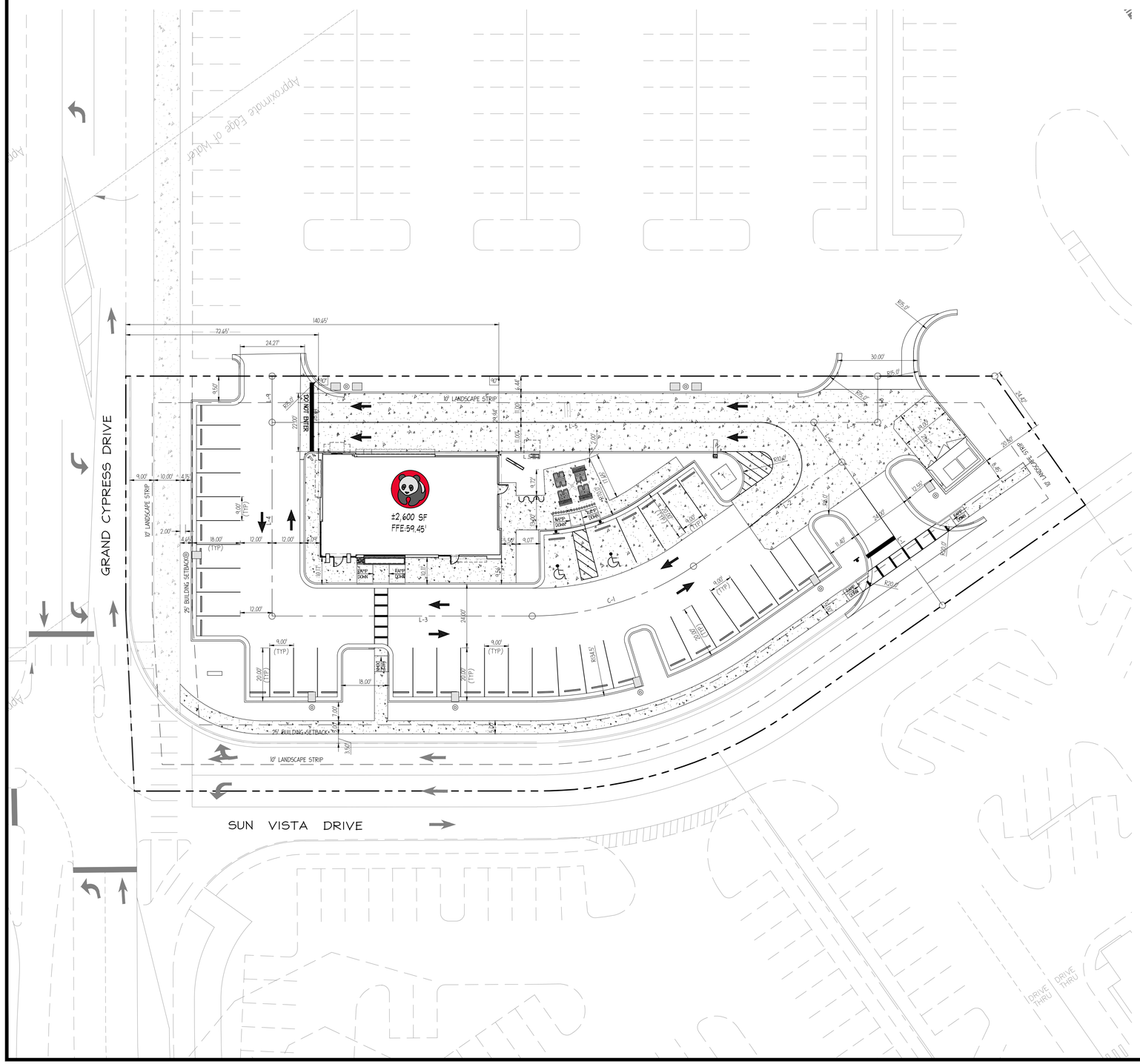

LOCATION MAP

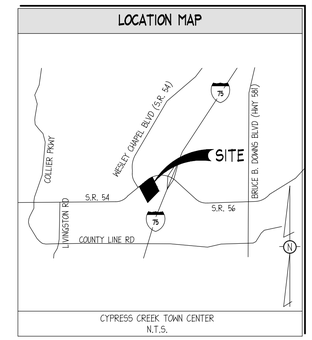

CYPRESS CREEK TOWN CENTER
N.T.S.

LINE TABLE				
LINE #	LENGTH	DIRECTION	START POINT	END POINT
L-1	66.06	N00°05'29"W	544766.51, 1399819.59	544766.40, 1399885.65
L-2	68.33	N89°54'31"E	544698.08, 1399885.54	544766.40, 1399885.65
L-3	98.10	S55°01'05"E	544957.10, 1399961.24	544637.48, 1399905.00
L-4	73.09	S35°00'42"W	544599.03, 1400021.11	544957.10, 1399961.24
L-5	204.29	S55°00'00"E	544599.03, 1400021.11	544766.38, 1399903.93
L-6	18.29	N00°05'29"W	544766.40, 1399885.65	544766.38, 1399903.93
L-7	24.04	S55°00'00"E	544766.38, 1399903.93	544786.07, 1399890.14
L-8	17.44	N35°00'00"E	544786.07, 1399890.14	544796.08, 1399904.43
L-9	17.44	S35°00'42"W	544609.04, 1400035.39	544599.03, 1400021.11

CURVE TABLE					
CURVE #	LENGTH	RADIUS	DELTA	CHORD LENGTH	CHORD BEARING
C-1	64.62	107.77	34.3515	63.65	S72°11'38"E

STAKING NOTES

1. ALL RADII ARE 3.0' UNLESS OTHERWISE NOTED.
2. ALL DIMENSIONS ARE MEASURED TO FACE OF CURB UNLESS OTHERWISE NOTED.
3. SEE SHEET C01.1 FOR GENERAL NOTES.

24-HOUR CONTACT:
MS. JANICE MORRISS
626.372.8292

Sunshine 811
Always call 811 before you dig.

N

GRAPHIC SCALE (in feet): 1" = 20'
10' 0' 20' 40'

GRIMAIL CRAWFORD, INC.
ENGINEERING · PLANNING · GIS
3650 MANSELL ROAD
SUITE 495
ALPHARETTA, GA 30022
770.437.8850 844.833.6661 FAX
www.gc-inc.com

PANDA EXPRESS
CYPRESS CREEK TOWN CENTER
GRAND CYPRESS DRIVE
WESLEY CHAPEL, FLORIDA

PANDA EXPRESS · CHINESE KITCHEN

PLANS FOR:

CLIENT:
PANDA RESTAURANT GROUP, INC.
1683 WALNUT GROVE AVE
ROSEMEAD, CA 91770
PHONE: (626) 372-8119

REVISION HISTORY

--/--/----	--/--/----
--/--/----	--/--/----
--/--/----	--/--/----
--/--/----	--/--/----
--/--/----	--/--/----
--/--/----	--/--/----
--/--/----	--/--/----

THE CIVIL ENGINEER REGULARLY UPDATES ELECTRONIC FILES DURING THE DEVELOPMENT OF A PROJECT. AS A RESULT, THE DATA INCLUDED IN ANY CAD FILE OR DRAWING PRIOR TO ITS FINAL RELEASE DOES NOT NECESSARILY REFLECT THE COMPLETE SCOPE OR CONTENT AS DEFINED IN THE CONTRACT. THE CONTENTS IN THESE FILES MAY THEREFORE BE PRELIMINARY, INCOMPLETE WORK IN PROGRESS, AND SUBJECT TO CHANGE. FURTHERMORE, THE INFORMATION CONTAINED HEREIN IS THE EXCLUSIVE PROPERTY OF THE CIVIL ENGINEER. THE ORIGINAL IDEAS REPRESENTED HERE BY THIS INFORMATION SHALL NOT BE USED, ALTERED, OR REPRODUCED IN ANY MANNER WITHOUT THE EXPRESSED WRITTEN CONSENT OF THE CIVIL ENGINEER. THESE PLANS ARE SUBJECT TO FEDERAL COPYRIGHT LAWS. ANY USE OF SAME WITHOUT EXPRESSED WRITTEN PERMISSION OF THE CIVIL ENGINEER IS PROHIBITED.

GCI PROJ #	140283
DWG NAME	140283 C03.DWG
ISSUE DATE	10/07/15
GCI PROJ MGR	JMP

STAKING PLAN

C03.2
SHEET NUMBER

ISSUED FOR PERMITTING

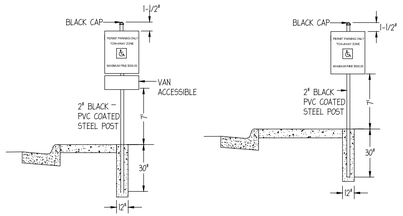

HEIGHT & CLEARANCE OF SIGNS
(FOR SITE SIGNAGE)

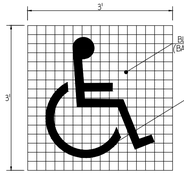

INTERNATIONAL ACCESSIBILITY SYMBOL

FLORIDA HANDICAPPED PARKING SIGN

1 HANDICAP ACCESSIBLE AREA

NTS

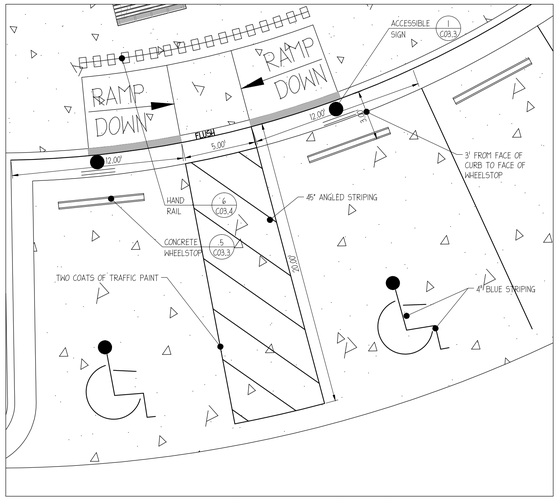

ACCESSIBLE PARKING STALL LAYOUT AND STRIPING
SCALE: 1" = 5'

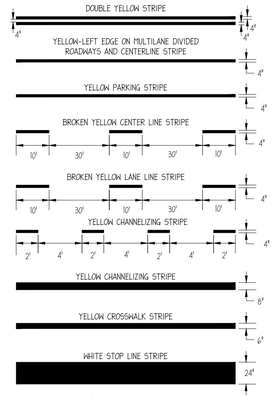

STRIPING SPECIFICATIONS

ALL ONSITE STRIPING TO BE DOUBLE COATED YELLOW UNLESS NOTED OTHERWISE ON PLANS.

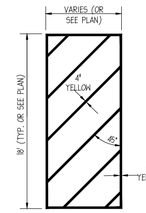

"NO PARKING ZONE" STRIPING

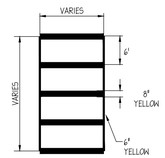

CROSSWALK SPECIFICATION

2 PAVEMENT STRIPING AND MARKING

NTS

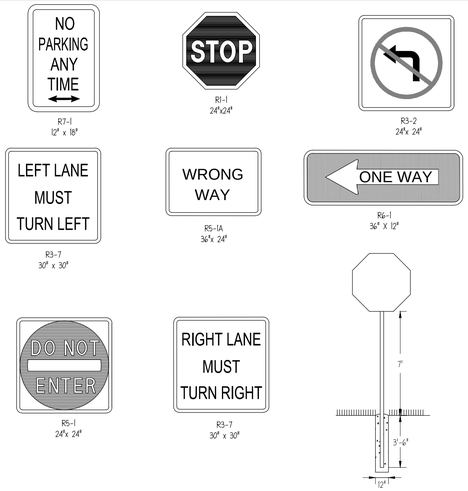

HEIGHT & CLEARANCE OF SIGNS
(FOR ROADWAY SIGN)

3 SITE SIGNAGE

NTS

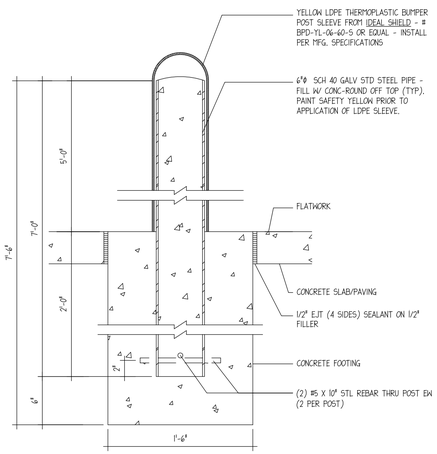

4 BOLLARD

NTS

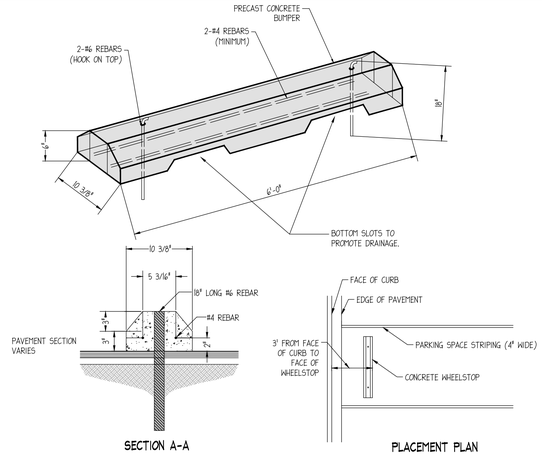

SECTION A-A

PLACEMENT PLAN

5 CONCRETE WHEELSTOP

NTS

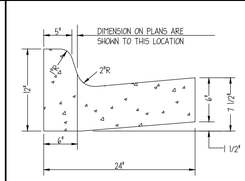

NORMAL CURB & GUTTER

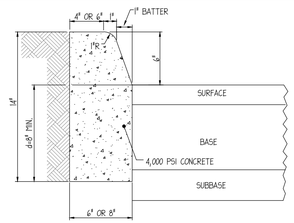

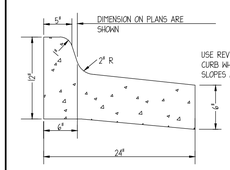

USE REVERSE OR "SPILL" CURB WHEN THE PAVEMENT SLOPES AWAY FROM CURB.

REVERSE CURB & GUTTER

24" CURB & GUTTER

NOTES:
- THE DIMENSION d MAY INCREASE AT CONTRACTOR'S OPTION SO BOTTOM OF HEADER CURB WILL ALIGN WITH BOTTOM OF PAVING.
- THIS ITEM MAY BE PRECAST OR CAST IN PLACE.

6" OR 8" HEADER CURB

NOTES:
1. f'c = 4,000 PSI
2. PROVIDE CONTROL JOINTS AT 20' O.C.
3. 6"x6" W4W4 MAY BE SUBSTITUTED WITH EQUILEVENT STRENGTH FIBER MESH.

6 CURB & GUTTER/HEADER CURB

NTS

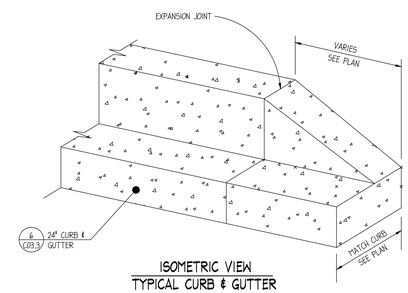

ISOMETRIC VIEW
TYPICAL CURB & GUTTER

7 CURB TRANSITION

NTS

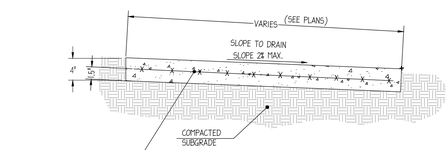

A

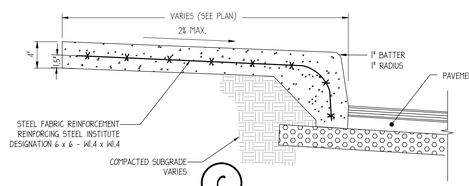

C

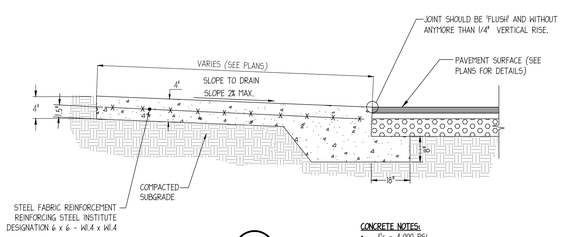

B

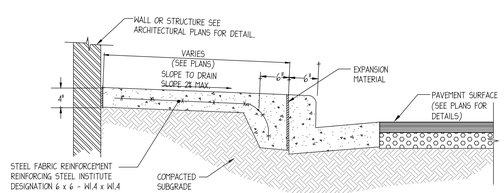

D

CONCRETE NOTES:
- f'c = 4,000 PSI
- PROVIDE CONTROL JOINTS AT 5' O.C.
- PROVIDE EXPANSION JOINTS ONLY WHERE CONCRETE PAVEMENT ABUTS FIXED OBJECTS, CURB AND GUTTER, AND OTHER PAVEMENT TYPES.
- 6"x6" W4W4 MAY BE SUBSTITUTED WITH EQUILEVENT STRENGTH FIBER MESH.

8 CONCRETE SIDEWALK

NTS

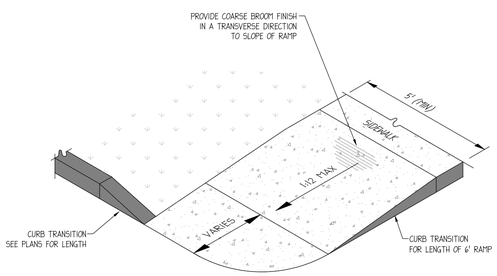

TYPE A

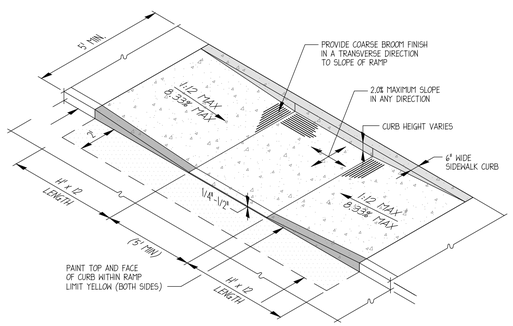

TYPE B

9 SIDEWALK RAMP

NTS

GRIMAIL CRAWFORD, INC.
ENGINEERING · PLANNING · GIS
3650 MANSELL ROAD
SUITE 495
ALPHARETTA, GA 30022
770.437.8850 844.833.6661 FAX
www.gc-inc.com

PANDA EXPRESS
CYPRESS CREEK TOWN CENTER
GRAND CYPRESS DRIVE
WESLEY CHAPEL, FLORIDA

PLANS FOR:

CLIENT:
PANDA RESTAURANT GROUP, INC.
1683 WALNUT GROVE AVE
ROSEMEAD, CA 91770
PHONE: (626) 372-8119

REVISION HISTORY

1	--/--/----	6	--/--/----
2	--/--/----	7	--/--/----
3	--/--/----	8	--/--/----
4	--/--/----	9	--/--/----
5	--/--/----	10	--/--/----

THE CIVIL ENGINEER REGULARLY UPDATES ELECTRONIC FILES DURING THE DEVELOPMENT OF A PROJECT. AS A RESULT, THE DATA INCLUDED IN ANY CAD FILE OR DRAWING PRIOR TO ITS FINAL RELEASE DOES NOT NECESSARILY REFLECT THE COMPLETE SCOPE OR CONTENT AS DEFINED IN THE CONTRACT. THE CONTENTS IN THESE FILES MAY THEREFORE BE PRELIMINARY, INCOMPLETE WORK IN PROGRESS, AND SUBJECT TO CHANGE. FURTHERMORE, THE INFORMATION CONTAINED HEREIN IS THE EXCLUSIVE PROPERTY OF THE CIVIL ENGINEER. THE ORIGINAL IDEAS REPRESENTED HERE BY THIS INFORMATION SHALL NOT BE USED, ALTERED, OR REPRODUCED IN ANY MANNER WITHOUT THE EXPRESSED WRITTEN CONSENT OF THE CIVIL ENGINEER. THESE PLANS ARE SUBJECT TO FEDERAL COPYRIGHT LAWS. ANY USE OF SAME WITHOUT EXPRESSED WRITTEN PERMISSION OF THE CIVIL ENGINEER IS PROHIBITED.

GCI PROJ #	140283
DWG NAME	140283 C03.DWG
ISSUE DATE	10/07/15
GCI PROJ MGR	JMP

HARDSCAPE DETAILS I

C03.3
SHEET NUMBER

ISSUED FOR PERMITTING

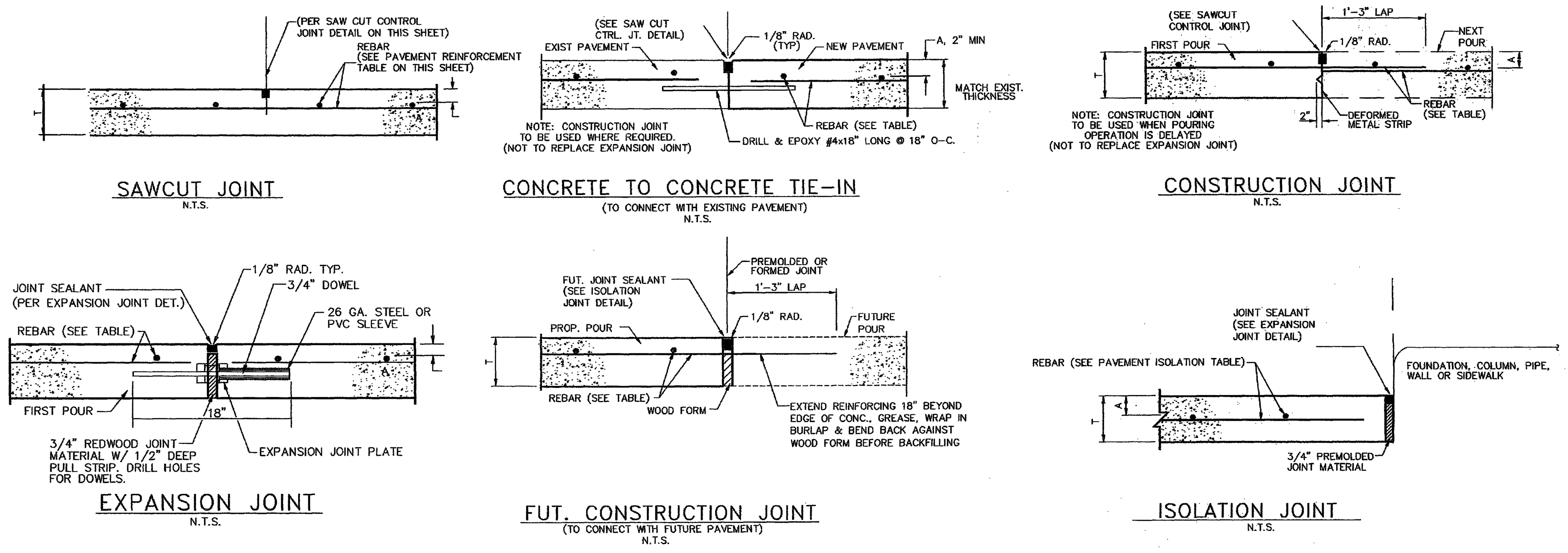

NOTES:
1. REINFORCING STEEL BAR SIZE/SPACING SPECIFICATIONS IN GEOTECH REPORT SHALL SUPERSEDE ABOVE TABLE.
2. REINFORCING STEEL SIZE/SPACING IS BASED ON MIN. 60,000 PSI TENSILE STRENGTH REINFORCING STEEL AS SHOWN.
3. CONCRETE PAVING MIX DESIGN SHALL HAVE MINIMUM 4000 PSI COMPRESSIVE STRENGTH AT 28 DAYS. GEOTECH REPORT CONCRETE PAVING MIX DESIGN SHALL SUPERSEDE VALUES HEREIN.
4. MAXIMUM JOINT SPACING SHALL BE PER JOINT LAYOUT PLAN (IF PROVIDED) BUT SHALL NOT EXCEED VALUES IN TABLE.
5. MAXIMUM JOINT SPACING IN GEOTECHNICAL REPORT SHALL SUPERSEDE VALUES IN ABOVE TABLE.
6. USE STATE DOT SUBBASE UNLESS OTHERWISE SPECIFIED BY GEOTECHNICAL REPORT.
7. ALL JOINTS IN PAVING SHALL BE REFLECTED IN CURBING AND SHALL HAVE ALL THEIR RESPECTIVE JOINTING MATERIALS PRESENT (I.E. EXPANSION JOINTS SHALL HAVE THEIR RESPECTIVE FILLER BOARD AND CAULK REPLACED).
8. CURB EXPANSION JOINTS: - IF THERE IS AN EXPANSION JOINT IN THE PAVING, THE EXPANSION JOINT MUST FOLLOW THROUGH THE CURB. THE REINFORCING STEEL MUST ALSO BE CUT AT THE EXPANSION JOINT AND NOT ALLOWED TO RUN THROUGH THE JOINT CONTINUOUSLY. A SAW CUT EXPANSION JOINT IS NOT ACCEPTABLE BECAUSE NORMAL EXPANSION AND CONTRACTION WILL CAUSED THE CONCRETE TO PUSH AGAINST THE TWO SECTIONS AND ONE SIDE WILL EVENTUALLY FAIL. IF AN EXPANSION JOINT IS LEFT OUT AND MUST BE SAW CUT IN, THE CURB SHOULD BE CUT TWICE AND A ¾" PIECE OF CONCRETE IS REMOVED. IN ALL CASES THE JOINT SHOULD BE CAULKED WITH NPI.
9. CONCRETE TOUCHING THE BACK OF CURBS:- ANY CONCRETE THAT TOUCHES THE BACK OF A CURB INCLUDING SIDEWALKS, ISLAND NOSINGS AND PAYPHONE PADS SHALL BE ISOLATED FROM THE CURB USING ½" BLACK ASPHALT IMPREGNATED FIREBOARD. CONTRACTOR SHALL USE A REMOVABLE STRIP OR A ZIP-STRIP AND SEAL THE JOINT WITH SL1. THE ONLY EXCEPTION IS IF THE ISLAND NOSINGS ARE POURED MONOLITHICALLY WITH THE CURB AND PARKING LOT.
10. CURBS AT THE BUILDING FOUNDATION:- IF A CURB TOUCHES THE BUILDING FOUNDATION, IT NEEDS TO BE ISOLATED WITH EXPANSION JOINT MATERIAL JUST LIKE THE PAVING. IF AN EXPANSION JOINT IS LEFT OUT AND MUST BE SAW CUT IN, A ½" PIECE OF CONCRETE SHOULD BE REMOVED. THE JOINT SHOULD BE CAULKED WITH NPI.
11. EXPANSION JOINTS AT ISLAND NOSINGS:- IF THE ISLAND NOSINGS ARE POURED MONOLITHICALLY WITH THE CUB AND PARKING LOT, THEN PAVING EXPANSION JOINTS SHOULD CONTINUE THROUGH THE NOSINGS.

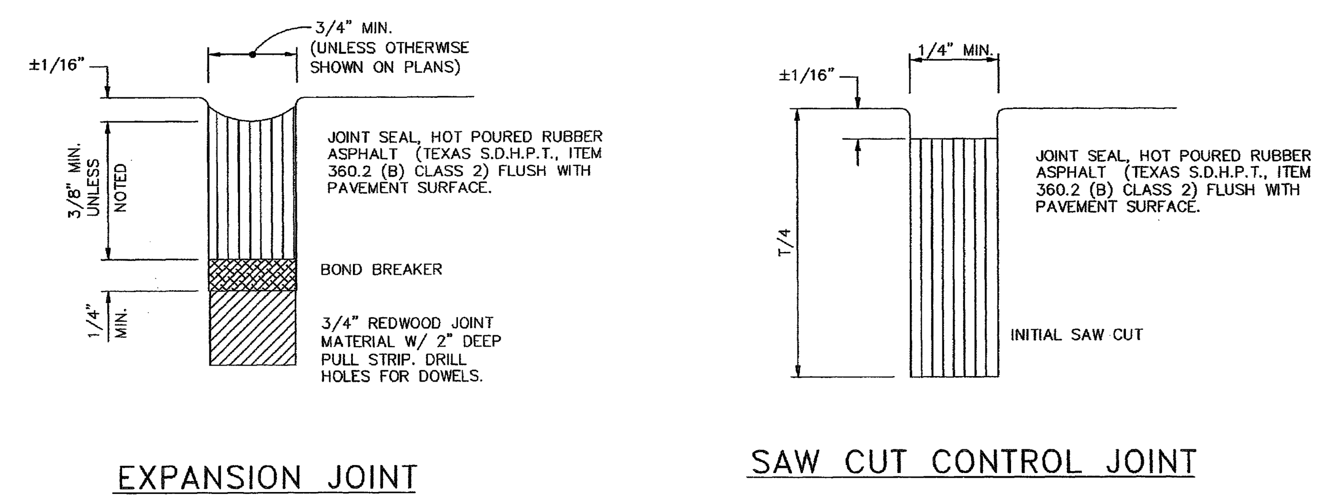

DETAILS

N.T.S.

REINFORCEMENT TABLE				
CONCRETE SECTION DESIGNATION	(T) SLAB THICKNESS (IN.)	(COVER) COVER (IN.) (2" MIN)	MAX. EXPANSION JOINT SPACING (FT.)	60,000 PSI STEEL REINFORCING STEEL BAR SIZE & SPACING#
TYPE "A"	5	2	15	#3 @ 24" C-C
TYPE "B"	6	2	15	#3 @ 24" C-C
TYPE "C"	6	2	15	#3 @ 24" C-C

NOTES:
1. REINFORCEMENT MAY BE SUBSTITUTED WITH EQUIVALENT FIBER MESH OR AS DIRECTED BY GEOTECHNICAL ENGINEER.

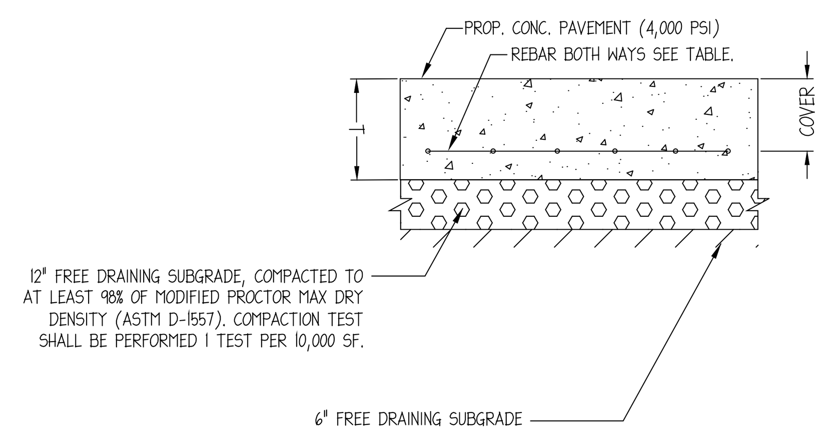

1 CONCRETE SECTION NTS

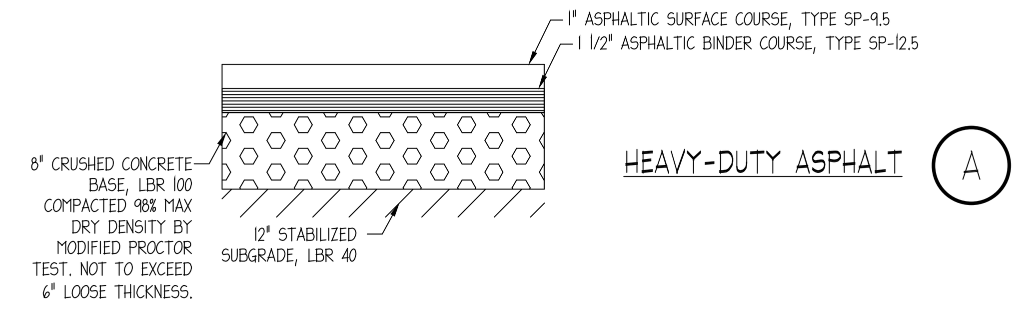

HEAVY-DUTY ASPHALT (A)

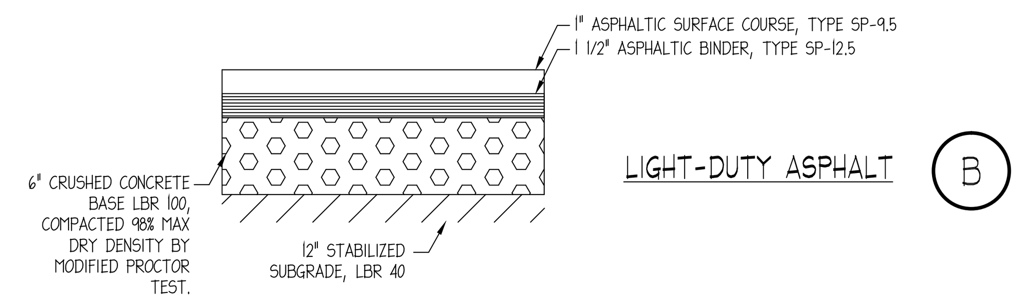

LIGHT-DUTY ASPHALT (B)

ASPHALT NOTES:
- THE ASPHALT SURFACE COURSE SHOULD CONFORM TO THE MOST RECENT EDITION OF THE FLORIDA DEPARTMENT OF TRANSPORTATION (FDOT) STANDARD SPECIFICATION FOR ROAD AND BRIDGE CONSTRUCTION.
- THE BASE COURSE SHOULD CONFORM TO THE FDOT STANDARDS FOR BASE COURSE COMPACTED TO 100 PERCENT OF THE MODIFIED PROCTOR (ASTM D-1557) MAXIMUM DRY DENSITY.
- ASPHALT SHOULD BE COMPACTED TO A MINIMUM OF 95% OF DESIGN MIX DENSITY.
- CRUSHED CONCRETE BASE SHALL MEET CURRENT FDOT SPECIFICATION 204 FOR RECYCLED MATERIALS.

2 PAVEMENT SECTION NTS

3 NOT USED NTS

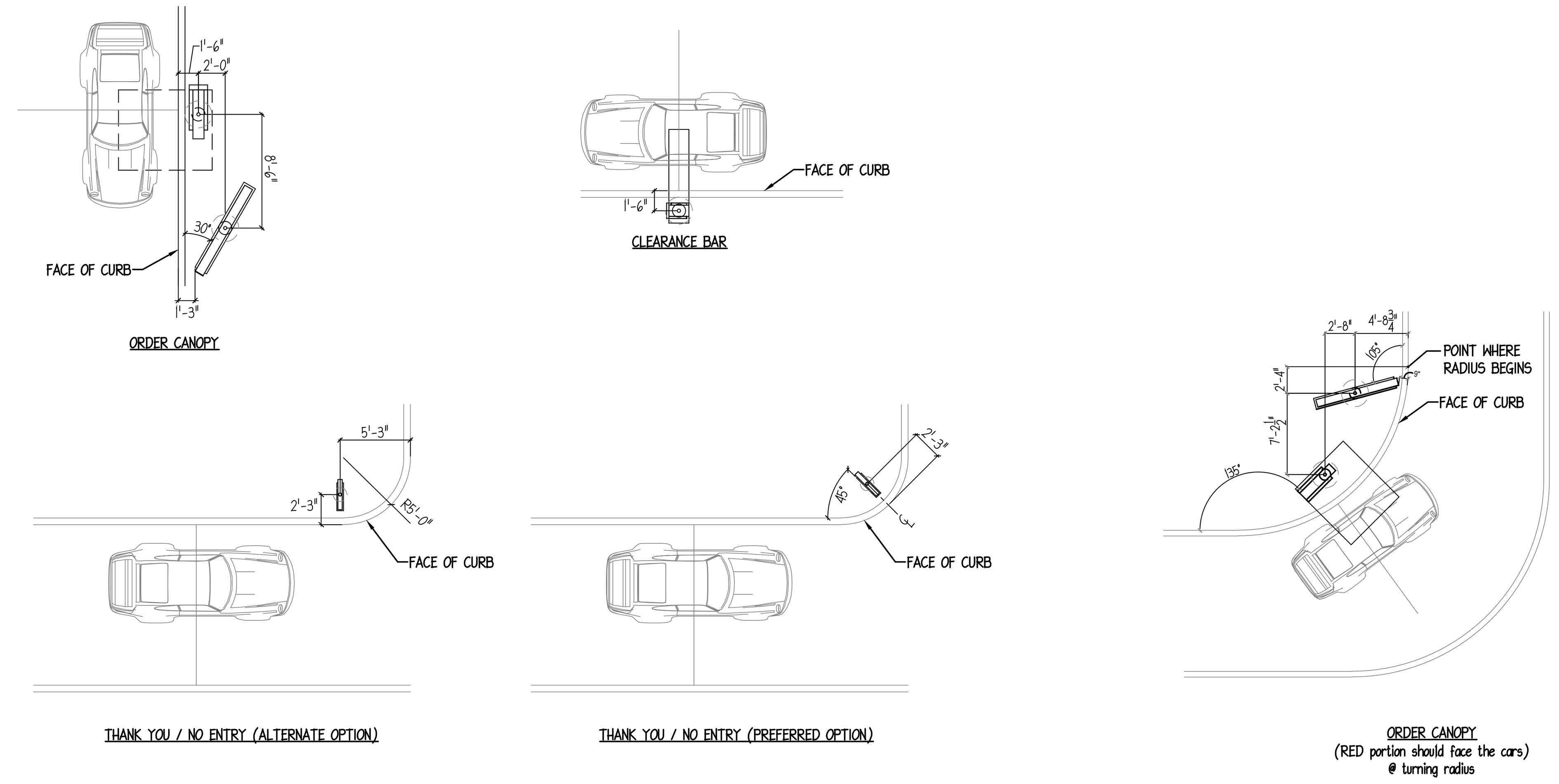

4 DRIVE-THRU ELEMENTS NTS

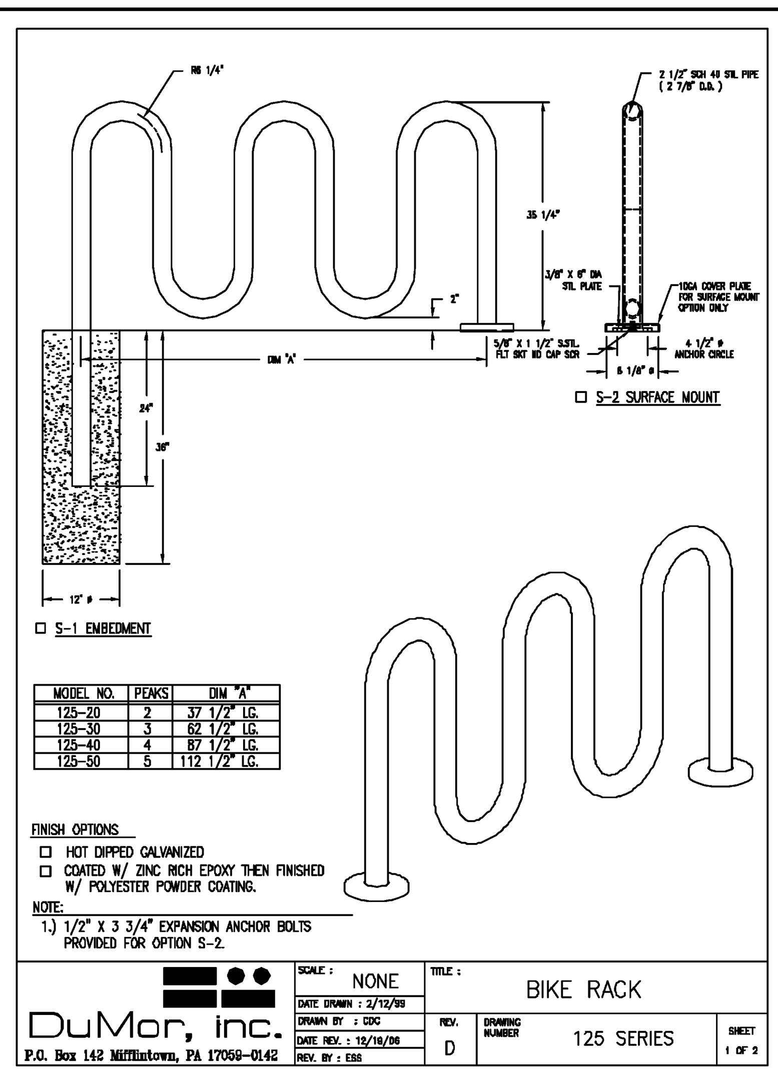

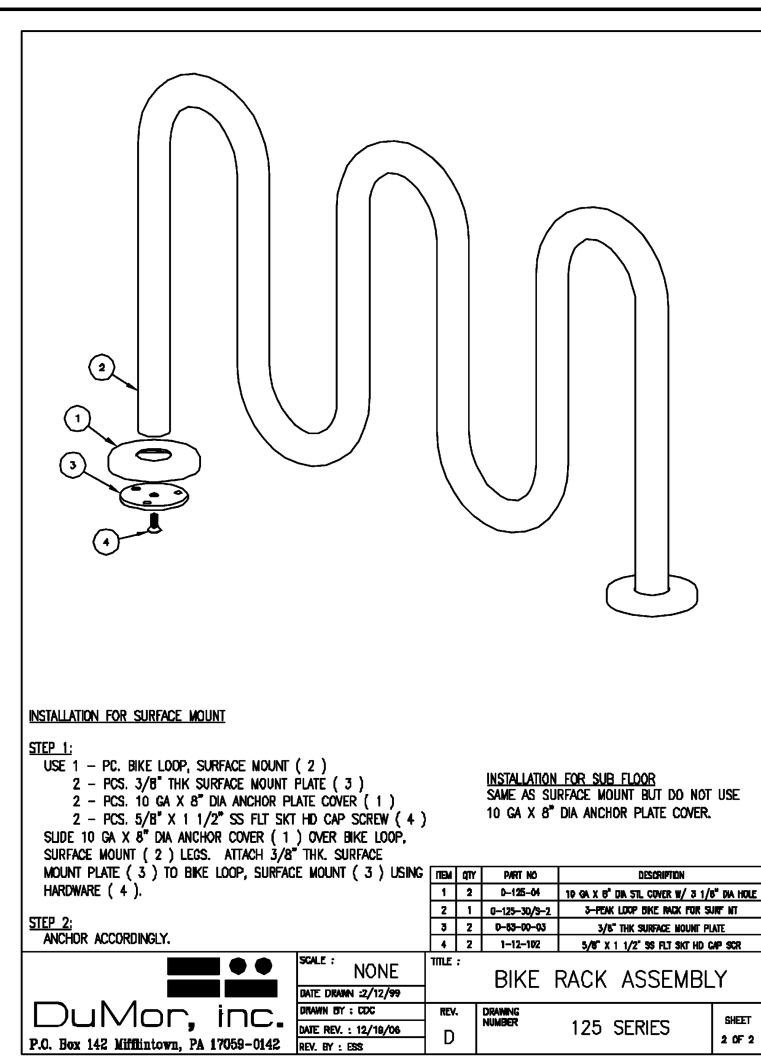

5 BIKE RACK NTS

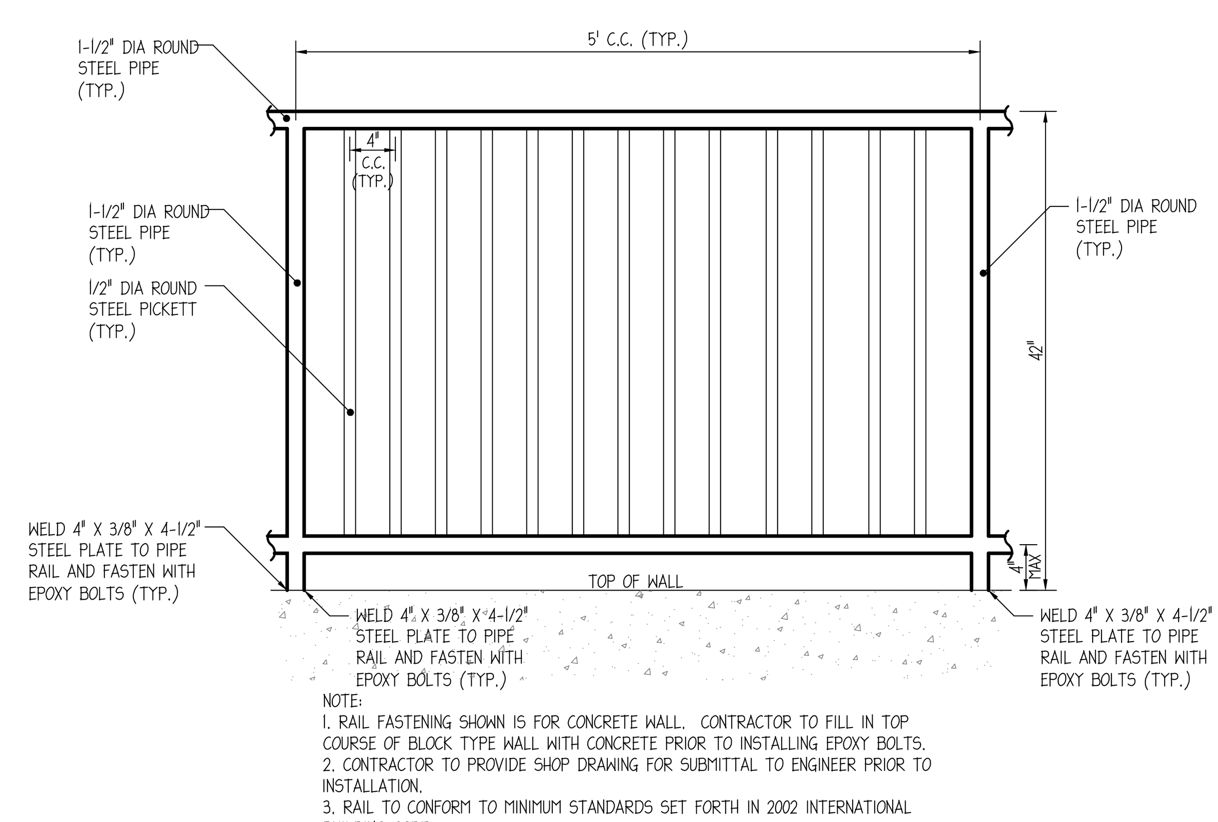

NOTE:
1. RAIL FASTENING SHOWN IS FOR CONCRETE WALL. CONTRACTOR TO FILL IN TOP COURSE OF BLOCK TYPE WALL WITH CONCRETE PRIOR TO INSTALLING EPOXY BOLTS.
2. CONTRACTOR TO PROVIDE SHOP DRAWING FOR SUBMITTAL TO ENGINEER PRIOR TO INSTALLATION.
3. RAIL TO CONFORM TO MINIMUM STANDARDS SET FORTH IN 2002 INTERNATIONAL BUILDING CODE.

6 HANDRAIL NTS

GRIMAIL CRAWFORD, INC.
ENGINEERING · PLANNING · GIS
3650 MANSELL ROAD
SUITE 495
ALPHARETTA, GA 30022
770.437.8850 844.833.6661 FAX
www.gc-inc.com

PLANS FOR:

PANDA EXPRESS
CYPRESS CREEK TOWN CENTER
GRAND CYPRESS DRIVE
WESLEY CHAPEL, FLORIDA

CLIENT:
PANDA RESTAURANT GROUP, INC.
1683 WALNUT GROVE AVE
ROSEMEAD, CA 91770
PHONE: (626) 372-8119

REVISION HISTORY

-- --/--/----	-- --/--/----
-- --/--/----	-- --/--/----
-- --/--/----	-- --/--/----
-- --/--/----	-- --/--/----
-- --/--/----	-- --/--/----
-- --/--/----	-- --/--/----
-- --/--/----	-- --/--/----

THE CIVIL ENGINEER REGULARLY UPDATES ELECTRONIC FILES DURING THE DEVELOPMENT OF A PROJECT. AS A RESULT, THE DATA INCLUDED IN ANY CAD FILE OR DRAWING PRIOR TO ITS FINAL RELEASE DOES NOT NECESSARILY REFLECT THE COMPLETE SCOPE OR CONTENT AS DEFINED IN THE CONTRACT. THE CONTENTS IN THESE FILES MAY THEREFORE BE PRELIMINARY, INCOMPLETE WORK IN PROGRESS, AND SUBJECT TO CHANGE. FURTHERMORE, THE INFORMATION CONTAINED HEREIN IS THE EXCLUSIVE PROPERTY OF THE CIVIL ENGINEER. THE ORIGINAL IDEAS REPRESENTED HERE BY THIS INFORMATION SHALL NOT BE USED, ALTERED, OR REPRODUCED IN ANY MANNER WITHOUT THE EXPRESSED WRITTEN CONSENT OF THE CIVIL ENGINEER. THESE PLANS ARE SUBJECT TO FEDERAL COPYRIGHT LAWS; ANY USE OF SAME WITHOUT EXPRESSED WRITTEN PERMISSION OF THE CIVIL ENGINEER IS PROHIBITED.

GCI PROJ #	140283
DWG NAME	140283 C03.DWG
ISSUE DATE	10/07/15
GCI PROJ MGR	JMP

HARDSCAPE DETAILS II

C03.4
SHEET NUMBER

ISSUED FOR PERMITTING

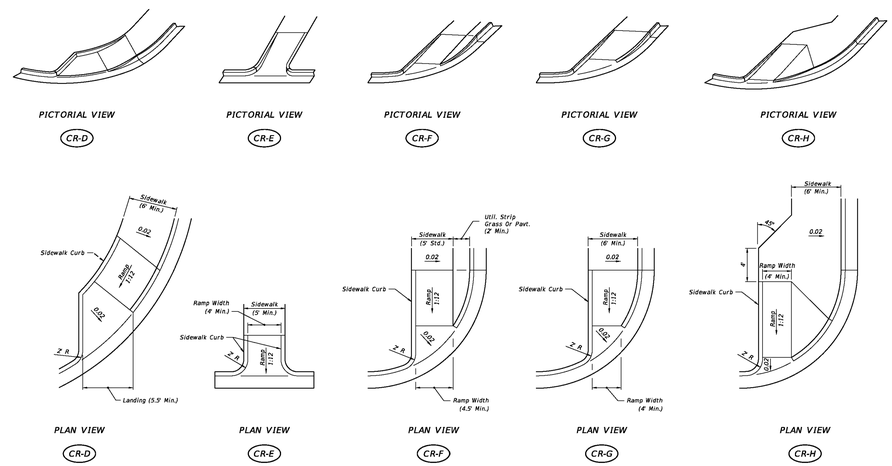

DIMENSIONAL FEATURES OF SIDEWALK CURB RAMPS FOR LINEAR PEDESTRIAN TRAFFIC

LAST REVISION	REVISION	DESCRIPTION:			INDEX NO.	SHEET NO.
07/01/13			FDOT 2015 DESIGN STANDARDS	DETECTABLE WARNINGS AND SIDEWALK CURB RAMPS	304	3 of 7

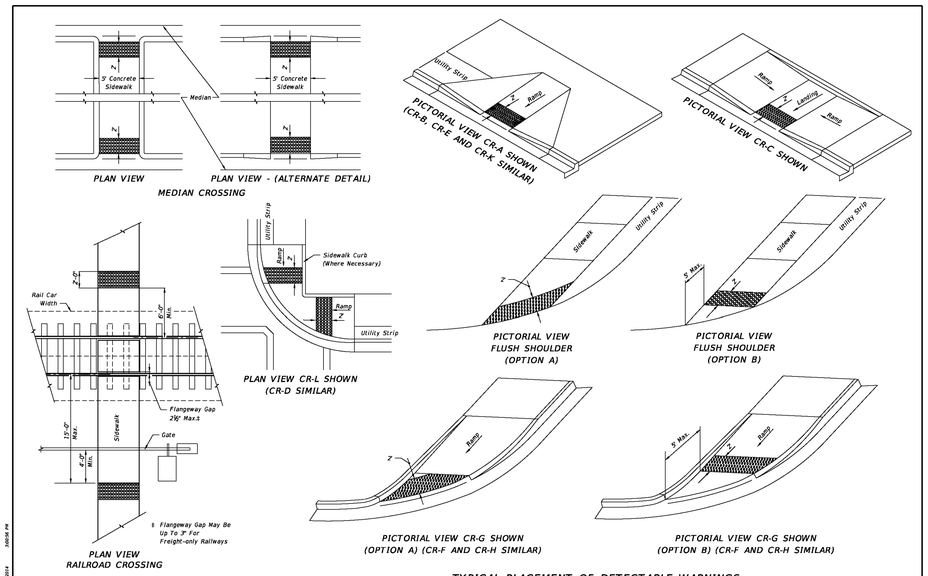

TYPICAL PLACEMENT OF DETECTABLE WARNINGS

LAST REVISION	REVISION	DESCRIPTION:			INDEX NO.	SHEET NO.
07/01/13			FDOT 2015 DESIGN STANDARDS	DETECTABLE WARNINGS AND SIDEWALK CURB RAMPS	304	6 of 7

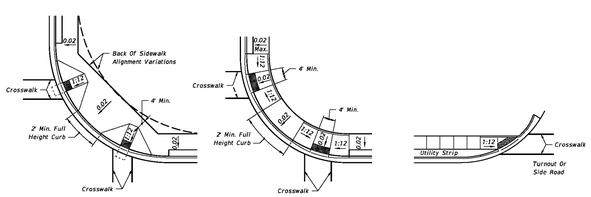

RADIAL SIDEWALK RAMPS

LINEAR SIDEWALK RAMPS

NOTES:

1. Where crosswalk markings are used, ramps shall fall within the crosswalk limits. A clear space of 48" minimum is required at the bottom of the ramp within a marked crosswalk. If crosswalk markings are not present, a clear space of 48" minimum is required at the bottom of the ramp outside of active travel lanes.
2. Crosswalk widths and configurations vary; must conform to Index No. 17346 and 17346.

TYPICAL PLACEMENT OF SIDEWALK CURB RAMPS AT CURBED RETURNS

TABLE OF DETECTABLE WARNINGS

CURB RAMP TYPE	CURB RADIUS (FT)	TOTAL AREA (SF)
CR-A	N/A	8
CR-B	N/A	8
CR-C	N/A	8
CR-D	25	11
CR-E	N/A	8
CR-F	10	9
	20	11
	25	13
	30	14
CR-G	10	10
	20	11
	25	12
	30	14
CR-H	20	8
	25	8
	30	8
CR-K	N/A	8
CR-L	10	18
	15	13
FLUSH SHOULDER OPTION A	10	11
	20	14
	25	15
	30	17
	40	19
	50	21
OPTION B	10	10
	20	10
	25	10

Note:
Due to construction applications, CR-L is the only curb ramp for which a detectable warning quantity was calculated using a curb radius of 15'.

For flush shoulder options with 5' sidewalks, the back of sidewalk is measured at 10' from the edge of traveled way.

AREAS OF DETECTABLE WARNINGS FOR SIDEWALK CURB RAMP AND FLUSH SHOULDER APPLICATIONS

LAST REVISION	REVISION	DESCRIPTION:			INDEX NO.	SHEET NO.
07/01/13			FDOT 2015 DESIGN STANDARDS	DETECTABLE WARNINGS AND SIDEWALK CURB RAMPS	304	7 of 7

1 FDOT RAMP DETAILS NTS

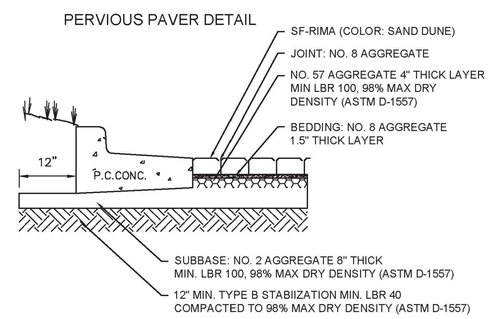

AGGREGATE SHALL BE CRUSHED CONCRETE, DOLOMITE OR GRANITE

2 FDOT RAMP DETAILS NTS

GRIMAIL CRAWFORD, INC.
ENGINEERING · PLANNING · GIS
3650 MANSELL ROAD
SUITE 495
ALPHARETTA, GA 30022
770.437.8850 844.833.6461 FAX
www.gc-inc.com

PANDA EXPRESS
CYPRESS CREEK TOWN CENTER
GRAND CYPRESS DRIVE
WESLEY CHAPEL, FLORIDA

PLANS FOR:

CLIENT:
PANDA RESTAURANT GROUP, INC.
1683 WALNUT GROVE AVE
ROSEMEAD, CA 91770
PHONE: (626) 372-8119

REVISION HISTORY

--/--/----	--/--/----
--/--/----	--/--/----
--/--/----	--/--/----
--/--/----	--/--/----
--/--/----	--/--/----
--/--/----	--/--/----
--/--/----	--/--/----

THE CIVIL ENGINEER REGULARLY UPDATES ELECTRONIC FILES DURING THE DEVELOPMENT OF A PROJECT. AS A RESULT, THE DATA INCLUDED IN ANY CAD FILE OR DRAWING PRIOR TO ITS FINAL RELEASE DOES NOT NECESSARILY REFLECT THE COMPLETE SCOPE OR CONTENT AS DEFINED IN THE CONTRACT. THE CONTENTS IN THESE FILES MAY THEREFORE BE PRELIMINARY, INCOMPLETE WORK IN PROGRESS, AND SUBJECT TO CHANGE. FURTHERMORE, THE INFORMATION CONTAINED HEREIN IS THE EXCLUSIVE PROPERTY OF THE CIVIL ENGINEER. THE ORIGINAL IDEAS REPRESENTED HERE BY THIS INFORMATION SHALL NOT BE USED, ALTERED, OR REPRODUCED IN ANY MANNER WITHOUT THE EXPRESSED WRITTEN CONSENT OF THE CIVIL ENGINEER. THESE PLANS ARE SUBJECT TO FEDERAL COPYRIGHT LAWS; ANY USE OF SAME WITHOUT EXPRESSED WRITTEN PERMISSION OF THE CIVIL ENGINEER IS PROHIBITED.

GCI PROJ #	140283
DWG NAME	140283 C03.DWG
ISSUE DATE	10/07/15
GCI PROJ MGR	JMP

HARDSCAPE DETAILS III

C03.5
SHEET NUMBER

ISSUED FOR PERMITTING

STORM STRUCTURE TABLE

STRUCTURE NAME	STRUCTURE TYPE	RIM ELEVATION	INVERT IN	INVERT OUT
A1	CURB INLET DETAIL 1, SHEET C04.3	56.60	53.10 (PA1.1) 53.10 (PA2)	53.10 (PA1)
A1.1	CURB INLET DETAIL 1, SHEET C04.3	57.35		53.81 (PA1.1)
A2	JUNCTION BOX DETAIL 1, SHEET C04.4	57.65	53.44 (PA3) 53.44 (PA2.1)	53.44 (PA2)
A2.1	CURB INLET DETAIL 1, SHEET C04.3	58.00		54.44 (PA2.1)
A3	GRATE INLET DETAIL 2, SHEET C04.3	57.90		53.96 (PA3)
EX1	EXISTING CATCH BASIN	58.00	52.82 (PA1)	

STORM PIPE TABLE

NAME	SIZE	LENGTH	SLOPE	MATERIAL
PA1	18"	28'	1.00%	RCP
PA1.1	15"	142'	0.50%	RCP
PA2	18"	34'	1.00%	RCP
PA2.1	18"	100'	1.00%	RCP
PA3	18"	52'	1.00%	RCP

SANITARY PIPE TABLE

NAME	SIZE	LENGTH	SLOPE	MATERIAL
PBLDG1	6"	3'	1.00%	PVC
PBLDG2	6"	6'	2.00%	PVC
PCo1.0	6"	50'	12.50%	PVC
PCo1.1	6"	5'	2.00%	PVC
PCo1.2	6"	36'	1.74%	PVC
PCo2.0	6"	2'	2.00%	PVC
PCo2.1	6"	49'	1.00%	PVC
PCo2.2	6"	49'	1.00%	PVC
PCo2.3	6"	48'	1.00%	PVC
PCo3.0	6"	21'	2.00%	PVC
PCo4.0	6"	7'	4.05%	PVC
PS2	6"	3'	2.00%	PVC
PS3	6"	24'	1.00%	PVC

SANITARY STRUCTURE TABLE

STRUCTURE NAME	STRUCTURE TYPE	RIM ELEVATION	INVERT IN	INVERT OUT
BLDG1	STUB AT BUILDING	59.45		56.45 (PBLDG1)
BLDG2	STUB AT BUILDING	59.45		56.45 (PBLDG2)
Co0.0	6" CLEANOUT DETAIL 1, SHEET C04.3	57.75	49.34 (PCo1.0)	
Co1.0	6" CLEANOUT DETAIL 1, SHEET C04.3	59.10	55.61 (PS2) 55.61 (PCo1.1)	55.61 (PCo1.0)
Co1.1	6" CLEANOUT DETAIL 1, SHEET C04.3	59.05	55.71 (PCo1.2)	55.71 (PCo1.1)
Co1.2	6" CLEANOUT DETAIL 1, SHEET C04.3	59.30	56.33 (PBLDG2)	56.33 (PCo1.2)
Co2.0	6" CLEANOUT DETAIL 1, SHEET C04.3	59.10	55.71 (PCo3.0) 55.22 (PCo2.1)	55.71 (PCo2.0)
Co2.1	6" CLEANOUT DETAIL 1, SHEET C04.3	59.10	55.71 (PCo2.2)	55.71 (PCo2.1)
Co2.2	6" CLEANOUT DETAIL 1, SHEET C04.3	59.10	56.20 (PCo2.3)	56.20 (PCo2.2)
Co2.3	6" CLEANOUT DETAIL 1, SHEET C04.3	59.10	56.68 (PS3)	56.68 (PCo2.3)
Co3.0	6" CLEANOUT DETAIL 1, SHEET C04.3	59.35	56.12 (PCo4.0)	56.12 (PCo3.0)
Co4.0	6" CLEANOUT DETAIL 1, SHEET C04.3	59.35	56.42 (PBLDG1)	56.42 (PCo4.0)
S2	1,500 GALLON GREASE TRAP	59.10		
S2 IN	1,500 GALLON GREASE TRAP	59.10	55.67 (PCo2.0)	
S2 OUT	1,500 GALLON GREASE TRAP	59.10		55.68 (PS2)
S3	DUMPSTER DRAIN SEE ARCHITECTURAL PLANS FOR DETAIL	58.92		56.92 (PS3)

UTILITY LEGEND

UTILITY	LINETYPE/SYMBOL	REFERENCE
DOMESTIC WATER LINE	DW	1 1/4" TYPE "K" COPPER
FIRE WATER LINE	FW	NOT APPLICABLE
BUILDING FIRE SPRINKLER LINE	FWS	NOT APPLICABLE
IRRIGATION WATER LINE	IRR	1" PVC
WATER METER (WM)	WM	1 1/4"
IRRIGATION METER (IRR)	IRR	1"
BACKFLOW PREVENTOR (RPZ)	RPZ	DETAIL 1, SHEET C04.2
FIRE VAULT (DDC)	DDC	NOT APPLICABLE
DC BACKFLOW PREVENTER		NOT APPLICABLE
WATER TAP OR TEE		**
GATE VALVE (GV)	GV	**
THRUST BLOCK (TB)	TB	DETAIL 1, SHEET C04.6
FIRE HYDRANT (FH)	FH	NOT APPLICABLE
FIRE DEPARTMENT CONNECTION (FDC)	FDC	NOT APPLICABLE
SANITARY SEWER (SS)	SS	SEE PLANS
SANITARY MANHOLE (SSMH)		NOT APPLICABLE
GENERAL CLEAN OUT (Co)	Co	DETAIL 6, SHEET C04.2
GREASE TRAP (GT)	SS	**DETAIL 7, SHEET C04.2
SANITARY STRUCTURE NUMBER	S2	SEE PLANS
UNDERGROUND ELECTRIC LINE	UGE	(2) 4" PVC CONDUITS
POST INDICATOR VALVE	PIV	NOT APPLICABLE
SITE LIGHTING POLE		PHOTOMETRICS BY OTHERS. SEE SHEET SL01.0
TRANSFORMER PAD	T	DETAIL 5, SHEET C04.3
METER/CT PEDESTAL	CT	**
UNDERGROUND TELEPHONE LINE	UGT	(2) 2" PVC CONDUITS
GENERAL UTILITY CONDUIT	GU	(2) 4" PVC CONDUITS
GAS LINE	G	**
GAS METERS	G	**
DATA LINE	DATA	(2) 4" PVC CONDUITS

** ALL UTILITIES SHALL BE INSTALLED ACCORDING TO UTILITY PROVIDERS AND JURISDICTION STANDARDS AND SPECIFICATIONS.

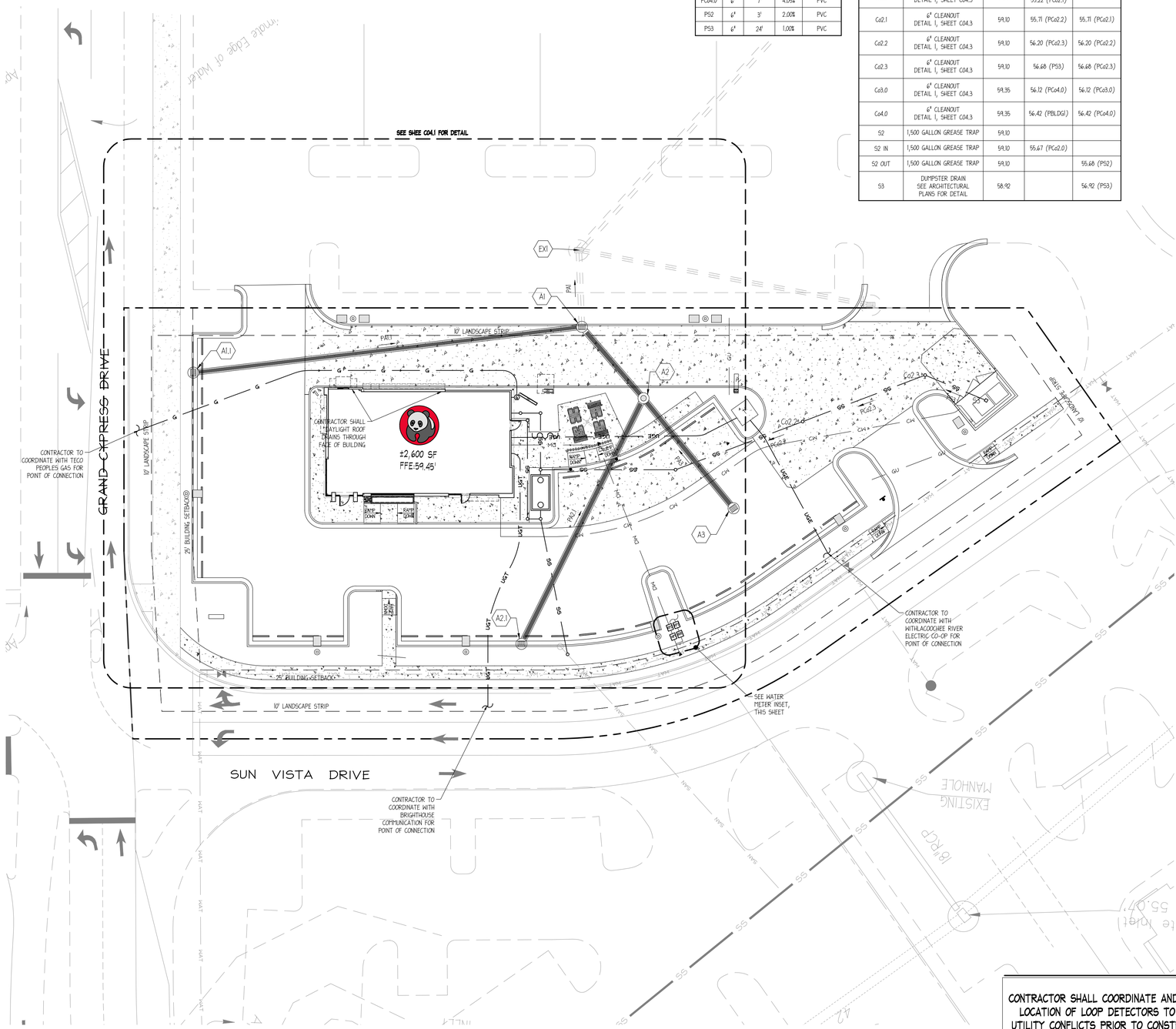

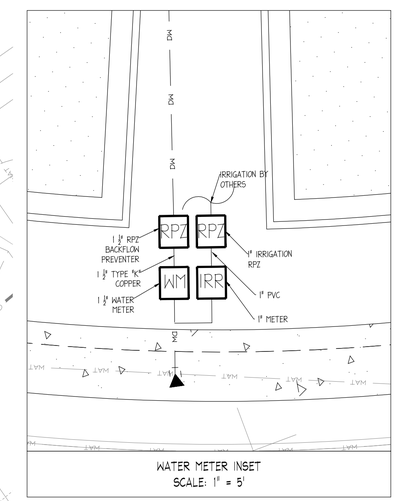

WATER METER INSET
SCALE: 1" = 5'

CONTRACTOR SHALL PROTECT ALL ITEMS OUTSIDE LIMITS OF CONSTRUCTION UNLESS OTHERWISE NOTED IN THE CONSTRUCTION PLANS OR SPECIFICATIONS.

CONTRACTOR SHALL FIELD VERIFY ALL EXISTING UTILITIES (LOCATIONS AND ELEVATIONS) PRIOR TO STARTING CONSTRUCTION AND ALERT ENGINEER TO ANY DISCREPANCIES IMMEDIATELY.

CONTRACTOR SHALL COORDINATE AND ADJUST LOCATION OF LOOP DETECTORS TO AVOID UTILITY CONFLICTS PRIOR TO CONSTRUCTION.

24-HOUR CONTACT:
MS. JANICE MORRISS
626.372.8292

LOCATION MAP

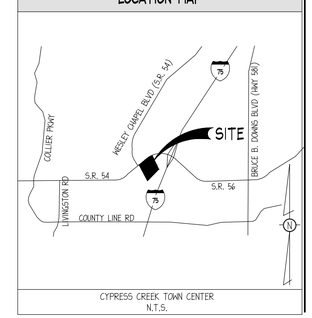

CYPRESS CREEK TOWN CENTER
N.T.S.

GENERAL UTILITY NOTES

1. SEE MEP PLANS FOR CONTINUATION OF ALL UTILITIES INTO BUILDING.
2. SANITARY LATERALS SHALL HAVE A MINIMUM FALL OF **1.00%**.
3. CONTRACTOR SHALL FIELD VERIFY ALL EXISTING UTILITIES AND THEIR LOCATIONS AND ELEVATIONS PRIOR TO STARTING CONSTRUCTION.
4. THE FINAL LOCATION OF FIRE HYDRANTS, VALVES, WATER LINES, BACKFLOW PREVENTERS, ETC. SHALL BE DETERMINED DURING CONSTRUCTION. NOTIFY THE ENGINEER OF ANY CHANGES TO LOCATION OR CONFIGURATION. NFPA CODES SHALL BE ADHERED TO.
5. THE CONTRACTOR SHALL CONTACT PUBLIC UTILITIES INSPECTIONS AT LEAST 72 HOURS PRIOR TO ANY CONSTRUCTION ACTIVITY. SEE SHEETS **C04.4-C04.5 FOR STORM DRAIN AND SANITARY SEWER PROFILES.**
6. ALL WORK TO BE DONE IN STRICT ACCORDANCE WITH LOCAL GOVERNING CODES.
7. UTILITY CONDUIT MATERIAL FOR ELECTRIC, TELEPHONE, AND CABLE SHALL BE INSTALLED PER UTILITY PROVIDER SPECIFICATIONS.
8. CONTRACTOR TO BUILD CONCRETE TRANSFORMER PAD AND INSTALL **SCHEDULE 40 PVC CONDUIT** AND PULL STRING WITH SWEEPING BENDS.
9. SEE SHEET C01.1 FOR GENERAL NOTES.

TELEPHONE INSTALLATION NOTES

1. CONTRACTOR TO PROVIDE **2-4" SCHEDULE 40 PVC CONDUIT** FROM BUILDING TO POINT OF CONNECTION TO POLE A5 SHOWN, AND **No. 6 GROUND, SEE MEP PLANS** FOR ADDITIONAL INFORMATION.
2. LEAD TIME **4 WEEKS.**
3. ALL FEES TO BE PAID BY CONTRACTOR.
4. CONTRACTOR TO VERIFY POINT OF CONNECTION PRIOR TO INSTALLING UTILITIES.

ELECTRIC INSTALLATION NOTES

1. CONTRACTOR SHALL PROVIDE **2-4"** CONDUITS AND CONDUCTORS FROM BUILDING TO 2' BELOW TRANSFORMER. SECONDARY CONDUCTORS SHALL EXTEND **15'** BEYOND CONDUIT ENDS.
2. THE TRANSFORMER CONCRETE PAD SHALL BE INSTALLED BY CONTRACTOR AS PER UTILITY PROVIDER SPECIFICATIONS. THE TRANSFORMER SECONDARY CONNECTIONS SHALL BE INSTALLED BY CONTRACTOR AS PER UTILITY PROVIDER SPECIFICATIONS.
3. TRANSFORMER PLACEMENT MUST MEET STATE FIRE CODE REQUIREMENTS.
4. ALL FEES SHALL BE PAID BY CONTRACTOR.

SITE LIGHTING NOTES

1. SITE LIGHTING DESIGNED BY OTHERS AND IS SHOWN FOR REFERENCE ONLY. POLE LOCATIONS ARE APPROXIMATE AND SUBJECT TO VERIFICATION BY PHOTOMETRIC PLAN (BY OTHERS). CONTRACTOR SHALL NOT INSTALL SITE LIGHTING POLES OR FIXTURES AS SHOWN ON THIS PLAN WITHOUT WRITTEN CONFIRMATION FROM ENGINEER.

NATURAL GAS INSTALLATION NOTES

1. ALL GAS MATERIAL AND EQUIPMENT FROM TAP TO FINAL LOCATION SHALL BE FURNISHED AND INSTALLED BY GAS COMPANY.
2. CONTRACTOR SHALL MAINTAIN 36" CLEARANCE BETWEEN GAS PIPING AND OTHER UTILITIES.
3. LEAD TIME FOR INSTALLATION OF GAS LINE IS A MINIMUM OF 4 WEEKS.
4. ALL FEES SHALL BE PAID BY CONTRACTOR.
5. CONTRACTOR SHALL COORDINATE ALL TRENCHING, BACKFILLING, AND PIPING WITH UTILITY PRIOR TO CONSTRUCTION.

SANITARY SEWER NOTES

1. CONTRACTOR SHALL COORDINATE TIMING OF INSTALLATION WITH UTILITY PRIOR TO CONSTRUCTION.
2. SEWER TAP TO BE MADE BY **UTILITY.**
3. ALL FEES TO BE PAID BY CONTRACTOR.

WATER NOTES

1. ALL FEES SHALL BE PAID BY CONTRACTOR, INCLUDING, BUT NOT LIMITED TO INSTALLATION, MATERIALS, METER, BFP, VAULT, AND IMPACT FEES.
2. TAP, METER, AND BACKFLOW PREVENTER TO BE INSTALLED BY CONTRACTOR.
3. ALL WATER VALVES SHALL MEET WATER AUTHORITY REQUIREMENTS.

FIRE PROTECTION NOTES

1. ALL PROJECTS MUST COMPLY WITH PASCO COUNTY FIRE HYDRANT ORDINANCE NO. 46-51.
2. FIRE HYDRANTS MUST BE INSTALLED AND IN SERVICE PRIOR TO THE ACCUMULATION OF COMBUSTIBLES.
3. PER THE NATIONAL FIRE PROTECTION ASSOCIATION, NFPA-1, 16.4.3.1.3: WHERE UNDERGROUND WATER MAINS AND HYDRANTS ARE TO BE PROVIDED, THEY SHALL BE INSTALLED, COMPLETED, AND IN SERVICE PRIOR TO CONSTRUCTION WORK.
4. PER NFPA-1, 18.3.4.1: CLEARANCE OF 7 1/2 FEET IN FRONT OF AND TO THE SIDES OF THE FIRE HYDRANT WITH A 4-FOOT CLEARANCE TO THE REAR MUST BE MAINTAINED AT ALL TIMES.
5. GATED SYSTEMS REQUIRE A SIREN OPERATING SYSTEM OR A 3M OPTION SYSTEM FOR EMERGENCY ACCESS.

Sunshine811
Always call 811 before you dig.

N
GRAPHIC SCALE (in feet.): 1" = 20'
10' 0' 20' 40'

GRIMAIL CRAWFORD, INC.
ENGINEERING · PLANNING · GIS
3650 MANSELL ROAD
SUITE 495
ALPHARETTA, GA 30022
770.457.8850 844.833.6661 FAX
www.gc-inc.com

PANDA EXPRESS
CYPRESS CREEK TOWN CENTER
GRAND CYPRESS DRIVE
WESLEY CHAPEL, FLORIDA

PLANS FOR:

CLIENT:
PANDA RESTAURANT GROUP, INC.
1683 WALNUT GROVE AVE
ROSEMEAD, CA 91770
PHONE: (626) 372-8119

REVISION HISTORY

--/--/----	--/--/----
--/--/----	--/--/----
--/--/----	--/--/----
--/--/----	--/--/----
--/--/----	--/--/----
--/--/----	--/--/----
--/--/----	--/--/----
--/--/----	--/--/----

THE CIVIL ENGINEER REGULARLY UPDATES ELECTRONIC FILES DURING THE DEVELOPMENT OF A PROJECT. AS A RESULT, THE DATA INCLUDED IN ANY CAD FILE OR DRAWING PRIOR TO ITS FINAL RELEASE DOES NOT NECESSARILY REFLECT THE COMPLETE SCOPE OR CONTENT AS DEFINED IN THE CONTRACT. THE CONTENTS IN THESE FILES MAY THEREFORE BE PRELIMINARY, INCOMPLETE WORK IN PROGRESS, AND SUBJECT TO CHANGE. FURTHERMORE, THE INFORMATION CONTAINED HEREIN IS THE EXCLUSIVE PROPERTY OF THE CIVIL ENGINEER. THE ORIGINAL IDEAS REPRESENTED HERE BY THIS INFORMATION SHALL NOT BE USED, ALTERED, OR REPRODUCED IN ANY MANNER WITHOUT THE EXPRESSED WRITTEN CONSENT OF THE CIVIL ENGINEER. THESE PLANS ARE SUBJECT TO FEDERAL COPYRIGHT LAWS. ANY USE OF SAME WITHOUT EXPRESSED WRITTEN PERMISSION OF THE CIVIL ENGINEER IS PROHIBITED.

GCI PROJ #	140283
DWG NAME	140283 C04.DWG
ISSUE DATE	10/07/15
GCI PROJ MGR	JMP

UTILITY PLAN

C04.0
SHEET NUMBER

ISSUED FOR PERMITTING

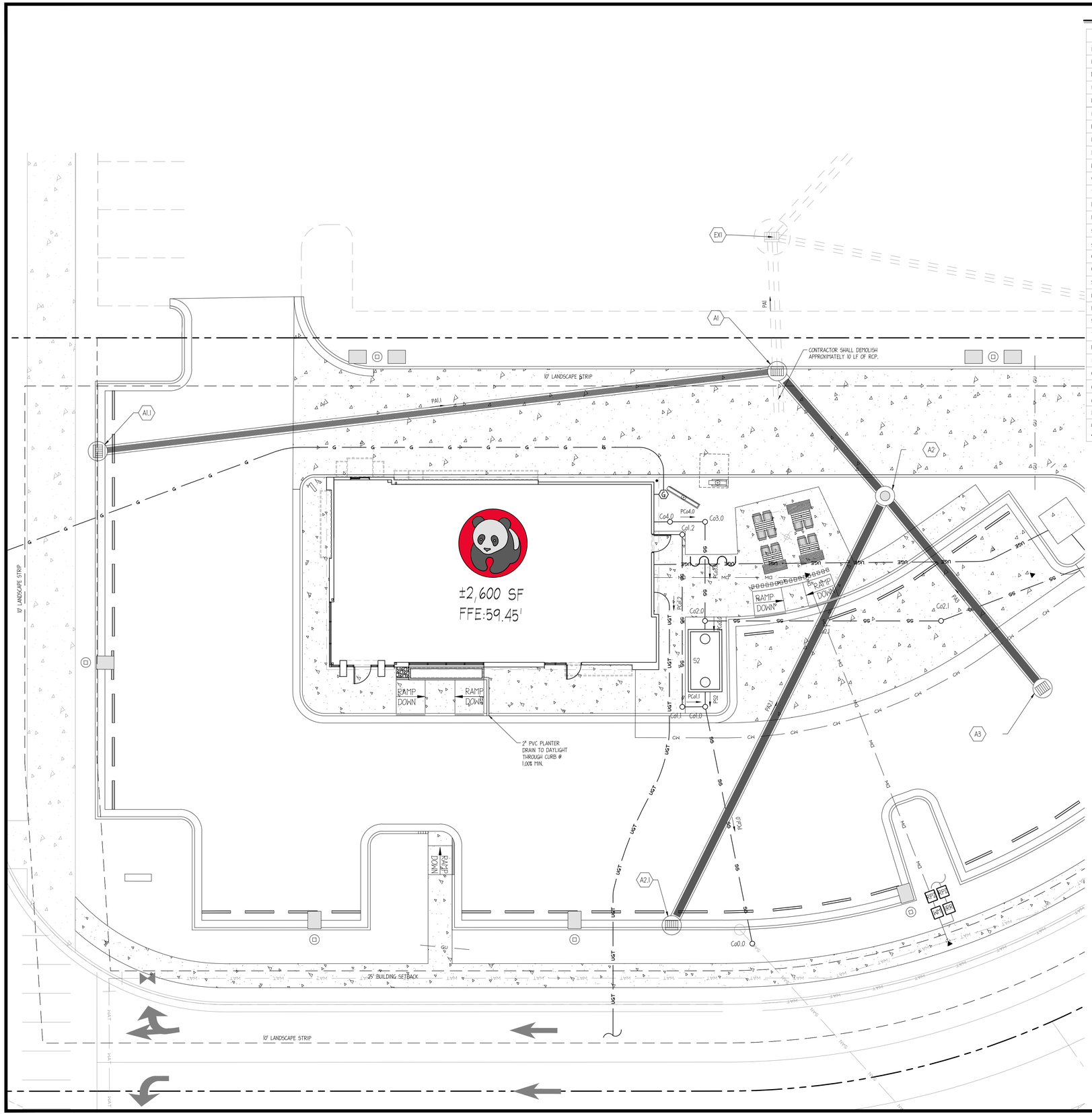

UTILITY LEGEND

UTILITY	LINETYPE/SYMBOL	REFERENCE
DOMESTIC WATER LINE	DW	1 1/2" TYPE "K" COPPER
FIRE WATER LINE	FW	NOT APPLICABLE
BUILDING FIRE SPRINKLER LINE	FWS	NOT APPLICABLE
IRRIGATION WATER LINE	IRR	1" PVC
WATER METER (WM)	WM	1 1/2"
IRRIGATION METER (IRR)	IRR	1"
BACKFLOW PREVENTOR (RPZ)	RPZ	DETAIL 1, SHEET C04.2
FIRE VAULT (DDC)	DDC	NOT APPLICABLE
DC BACKFLOW PREVENTER		NOT APPLICABLE
WATER TAP OR TEE		##
GATE VALVE (GV)	GV	##
THRUST BLOCK (TB)	TB	DETAIL 1, SHEET C04.6
FIRE HYDRANT (FH)	FH	NOT APPLICABLE
FIRE DEPARTMENT CONNECTION (FDC)	FDC	NOT APPLICABLE
SANITARY SEWER (SS)	SS	SEE PLANS
SANITARY MANHOLE (SSMH)		NOT APPLICABLE
GENERAL CLEAN OUT (CO)	CO	DETAIL 6, SHEET C04.2
GREASE TRAP (GT)	SS GT SS	##DETAIL 7, SHEET C04.2
SANITARY STRUCTURE NUMBER	S2	SEE PLANS
UNDERGROUND ELECTRIC LINE	UGE	(2) 4" PVC CONDUITS
POST INDICATOR VALVE	PIV	NOT APPLICABLE
SITE LIGHTING POLE		PHOTOMETRICS BY OTHERS. SEE SHEET SL0.0
TRANSFORMER PAD	T	DETAIL 5, SHEET C04.3
METER/CT PEDESTAL	CT	##
UNDERGROUND TELEPHONE LINE	UGT	(2) 2" PVC CONDUITS
GENERAL UTILITY CONDUIT	GU	(2) 4" PVC CONDUITS
GAS LINE	G	##
GAS METERS	G	##
DATA LINE	DATA	(2) 4" PVC CONDUITS

ALL UTILITIES SHALL BE INSTALLED ACCORDING TO UTILITY PROVIDERS AND JURISDICTION STANDARDS AND SPECIFICATIONS.

LOCATION MAP

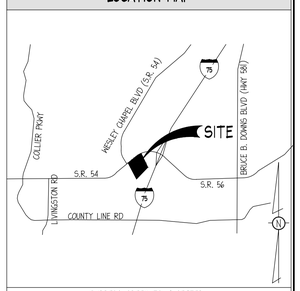

CYPRESS CREEK TOWN CENTER
N.T.S.

GENERAL UTILITY NOTES

1. SEE MEP PLANS FOR CONTINUATION OF ALL UTILITIES INTO BUILDING.
2. SANITARY LATERALS SHALL HAVE A MINIMUM FALL OF **1.00%**.
3. CONTRACTOR SHALL FIELD VERIFY ALL EXISTING UTILITIES AND THEIR LOCATIONS AND ELEVATIONS PRIOR TO STARTING CONSTRUCTION.
4. THE FINAL LOCATION OF FIRE HYDRANTS, VALVES, WATER LINES, BACKFLOW PREVENTERS, ETC. SHALL BE DETERMINED DURING CONSTRUCTION. NOTIFY THE ENGINEER OF ANY CHANGES TO LOCATION OR CONFIGURATION. NFPA CODES SHALL BE ADHERED TO.
5. THE CONTRACTOR SHALL CONTACT PUBLIC UTILITIES INSPECTIONS AT LEAST 72 HOURS PRIOR TO ANY CONSTRUCTION ACTIVITY. SEE SHEETS **C04.4-C04.5 FOR STORM DRAIN AND SANITARY SEWER PROFILES.**
6. ALL WORK TO BE DONE IN STRICT ACCORDANCE WITH LOCAL GOVERNING CODES.
7. UTILITY CONDUIT MATERIAL FOR ELECTRIC, TELEPHONE, AND CABLE SHALL BE INSTALLED PER UTILITY PROVIDER SPECIFICATIONS.
8. CONTRACTOR TO BUILD CONCRETE TRANSFORMER PAD AND INSTALL **SCHEDULE 40 PVC CONDUIT** AND PULL STRING WITH SWEEPING BENDS.
9. SEE SHEET C0.1 FOR GENERAL NOTES.

TELEPHONE INSTALLATION NOTES

1. CONTRACTOR TO PROVIDE **2-4" SCHEDULE 40 PVC CONDUIT** FROM BUILDING TO POINT OF CONNECTION TO POLE AS SHOWN, AND **No. 6 GROUND, SEE MEP PLANS** FOR ADDITIONAL INFORMATION.
2. LEAD TIME **4 WEEKS.**
3. ALL FEES TO BE PAID BY CONTRACTOR.
4. CONTRACTOR TO VERIFY POINT OF CONNECTION PRIOR TO INSTALLING UTILITIES.

ELECTRIC INSTALLATION NOTES

1. CONTRACTOR SHALL PROVIDE **2-4"** CONDUITS AND CONDUCTORS FROM BUILDING TO 2' BELOW TRANSFORMER. SECONDARY CONDUCTORS SHALL EXTEND **15'** BEYOND CONDUIT ENDS.
2. THE TRANSFORMER CONCRETE PAD SHALL BE INSTALLED BY CONTRACTOR AS PER UTILITY PROVIDER SPECIFICATIONS. THE TRANSFORMER SECONDARY CONNECTIONS SHALL BE INSTALLED BY CONTRACTOR AS PER UTILITY PROVIDER SPECIFICATIONS.
3. TRANSFORMER PLACEMENT MUST MEET STATE FIRE CODE REQUIREMENTS.
4. ALL FEES SHALL BE PAID BY CONTRACTOR.

SITE LIGHTING NOTES

1. SITE LIGHTING DESIGNED BY OTHERS AND IS SHOWN FOR REFERENCE ONLY. POLE LOCATIONS ARE APPROXIMATE AND SUBJECT TO VERIFICATION BY PHOTOMETRIC PLAN (BY OTHERS). CONTRACTOR SHALL NOT INSTALL SITE LIGHTING POLES OR FIXTURES AS SHOWN ON THIS PLAN WITHOUT WRITTEN CONFIRMATION FROM ENGINEER.

NATURAL GAS INSTALLATION NOTES

1. ALL GAS MATERIAL AND EQUIPMENT FROM TAP TO FINAL LOCATION SHALL BE FURNISHED AND INSTALLED BY GAS COMPANY.
2. CONTRACTOR SHALL MAINTAIN 36" CLEARANCE BETWEEN GAS PIPING AND OTHER UTILITIES.
3. LEAD TIME FOR INSTALLATION OF GAS LINE IS A MINIMUM OF 4 WEEKS.
4. ALL FEES SHALL BE PAID BY CONTRACTOR.
5. CONTRACTOR SHALL COORDINATE ALL TRENCHING, BACKFILLING, AND PIPING WITH UTILITY PRIOR TO CONSTRUCTION.

SANITARY SEWER NOTES

1. CONTRACTOR SHALL COORDINATE TIMING OF INSTALLATION WITH UTILITY PRIOR TO CONSTRUCTION.
2. SEWER TAP TO BE MADE BY **UTILITY.**
3. ALL FEES TO BE PAID BY CONTRACTOR.

WATER NOTES

1. ALL FEES SHALL BE PAID BY CONTRACTOR, INCLUDING, BUT NOT LIMITED TO INSTALLATION, MATERIALS, METER, BFP, VAULT, AND IMPACT FEES.
2. TAP, METER, AND BACKFLOW PREVENTER TO BE INSTALLED BY CONTRACTOR.
3. ALL WATER VALVES SHALL MEET WATER AUTHORITY REQUIREMENTS.

FIRE PROTECTION NOTES

1. ALL PROJECTS MUST COMPLY WITH PASCO COUNTY FIRE HYDRANT ORDINANCE NO. 46-51.
2. FIRE HYDRANTS MUST BE INSTALLED AND IN SERVICE PRIOR TO THE ACCUMULATION OF COMBUSTIBLES.
3. PER THE NATIONAL FIRE PROTECTION ASSOCIATION, NFPA-1, 16.4.3.1.3: WHERE UNDERGROUND WATER MAINS AND HYDRANTS ARE TO BE PROVIDED, THEY SHALL BE INSTALLED, COMPLETED, AND IN SERVICE PRIOR TO CONSTRUCTION WORK.
4. PER NFPA-1, 18.3.4.1: CLEARANCE OF 7 1/2 FEET IN FRONT OF AND TO THE SIDES OF THE FIRE HYDRANT WITH A 4-FOOT CLEARANCE TO THE REAR MUST BE MAINTAINED AT ALL TIMES.
5. GATED SYSTEMS REQUIRE A SIREN OPERATING SYSTEM OR A 3M OPTION SYSTEM FOR EMERGENCY ACCESS.

CONTRACTOR SHALL PROTECT ALL ITEMS OUTSIDE LIMITS OF CONSTRUCTION UNLESS OTHERWISE NOTED IN THE CONSTRUCTION PLANS OR SPECIFICATIONS.

CONTRACTOR SHALL FIELD VERIFY ALL EXISTING UTILITIES (LOCATIONS AND ELEVATIONS) PRIOR TO STARTING CONSTRUCTION AND ALERT ENGINEER TO ANY DISCREPANCIES IMMEDIATELY.

24-HOUR CONTACT:
MS. JANICE MORRISS
626.372.8292

Sunshine811
Always call 811 before you dig.

N

GRAPHIC SCALE (in feet). 1" = 20'
10' 0' 20' 40'

GRIMAIL CRAWFORD, INC.
ENGINEERING · PLANNING · GIS
3650 MANSELL ROAD
SUITE 495
ALPHARETTA, GA 30022
770.437.8850 844.833.6661 FAX
www.gc-inc.com

PANDA EXPRESS
CYPRESS CREEK TOWN CENTER
GRAND CYPRESS DRIVE
WESLEY CHAPEL, FLORIDA

PANDA EXPRESS · CHINESE KITCHEN

PLANS FOR:

CLIENT:
PANDA RESTAURANT GROUP, INC.
1683 WALNUT GROVE AVE
ROSEMEAD, CA 91770
PHONE: (626) 372-8119

REVISION HISTORY

--/--/----	--/--/----
--/--/----	--/--/----
--/--/----	--/--/----
--/--/----	--/--/----
--/--/----	--/--/----
--/--/----	--/--/----
--/--/----	--/--/----

THE CIVIL ENGINEER REGULARLY UPDATES ELECTRONIC FILES DURING THE DEVELOPMENT OF A PROJECT. AS A RESULT, THE DATA INCLUDED IN ANY CAD FILE OR DRAWING PRIOR TO ITS FINAL RELEASE DOES NOT NECESSARILY REFLECT THE COMPLETE SCOPE OR CONTENT AS DEFINED IN THE CONTRACT. THE CONTENTS IN THESE FILES MAY THEREFORE BE PRELIMINARY, INCOMPLETE WORK IN PROGRESS, AND SUBJECT TO CHANGE. FURTHERMORE, THE INFORMATION CONTAINED HEREIN IS THE EXCLUSIVE PROPERTY OF THE CIVIL ENGINEER. THE ORIGINAL IDEAS REPRESENTED HERE BY THIS INFORMATION SHALL NOT BE USED, ALTERED, OR REPRODUCED IN ANY MANNER WITHOUT THE EXPRESSED WRITTEN CONSENT OF THE CIVIL ENGINEER. THESE PLANS ARE SUBJECT TO FEDERAL COPYRIGHT LAWS. ANY USE OF SAME WITHOUT EXPRESSED WRITTEN PERMISSION OF THE CIVIL ENGINEER IS PROHIBITED.

GCI PROJ #	140283
DWG NAME	140283 C04.DWG
ISSUE DATE	10/07/15
GCI PROJ. MGR	JHP

BUILDING UTILITY DETAIL PLAN

C04.1
SHEET NUMBER

ISSUED FOR PERMITTING

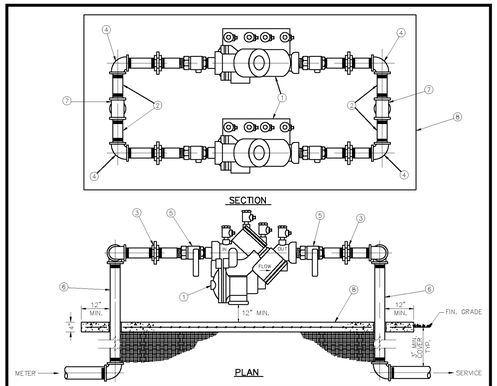

MATERIALS		
ITEM	QUANT.	DESCRIPTION
1	2	BACKFLOW PREVENTER ASSEMBLY, RP2
2	4	6" NIPPLES – GALVANIZED
3	4	UNION – GALV.
4	4	90° ELBOWS – GALV.
5	4	BALL VALVES – BRASS OR S.S.
6	2	RISER – GALV.
7	2	TEES – GALV.
8	*	CONCRETE SLAB

NOTE:
- FIELD ADJUST AND CUT ITEM 6 TO THE PROPER LENGTH.
- BFP DEVICE TO BE INSTALLED LEVEL AND PLUMB
- MINIMUM CLEARANCE OF 24" TO BE MAINTAINED AROUND DEVICE FOR TESTING.
- ENTIRE ASSEMBLY TO BE PAINTED SAFETY BLUE.
- CONCRETE SLAB TO EXTEND 12" MIN. AROUND ENTIRE DEVICE.
- DEVICE MUST BE LISTED WITH THE UNIVERSITY OF SOUTHERN CALIFORNIA FOUNDATION FOR CROSS CONNECTION CONTROL AND HYDRAULIC RESEARCH.

CREATED 02/24/03 REVISED	REDUCED PRESSURE BACKFLOW PREVENTER PARALLEL INSTALLATION (3/4", 1", 1-1/2", 2")	PROVIDED FOR INFORMATIONAL PURPOSES ONLY. NO MODIFICATIONS WITHOUT WRITTEN PCU APPROVAL.
	PASCO COUNTY UTILITIES	DETAIL 14

1 REDUCED PRESSURE BACKFLOW NTS

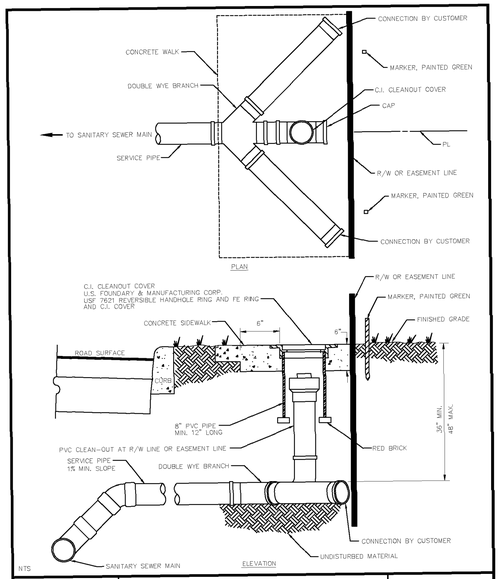

CREATED 02/24/03 REVISED	SANITARY SEWER – DOUBLE WYE CONNECTION AND TYPICAL CLEAN-OUT	PROVIDED FOR INFORMATIONAL PURPOSES ONLY. NO MODIFICATIONS WITHOUT WRITTEN PCU APPROVAL.
	PASCO COUNTY UTILITIES	DETAIL 46

2 DOUBLE WYE CONNECTION NTS

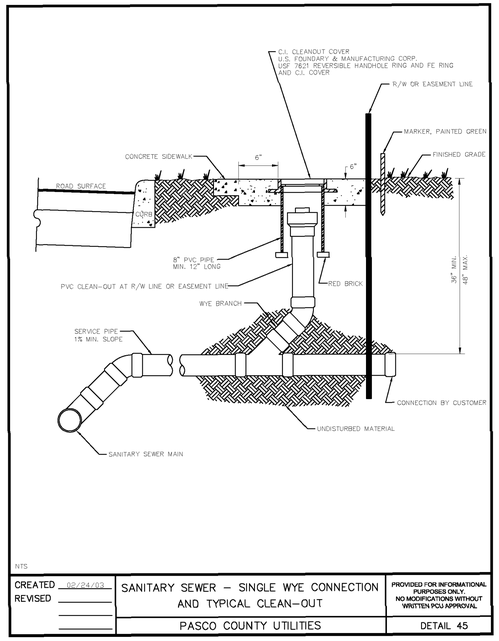

CREATED 02/24/03 REVISED	SANITARY SEWER – SINGLE WYE CONNECTION AND TYPICAL CLEAN-OUT	PROVIDED FOR INFORMATIONAL PURPOSES ONLY. NO MODIFICATIONS WITHOUT WRITTEN PCU APPROVAL.
	PASCO COUNTY UTILITIES	DETAIL 45

3 SINGLE WYE CONNECTION NTS

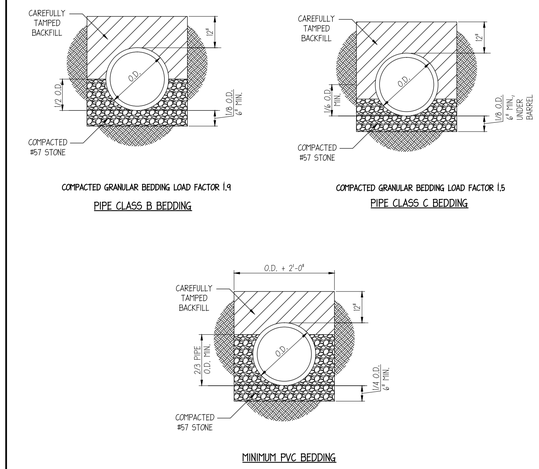

4 SEWER PIPE BEDDING NTS

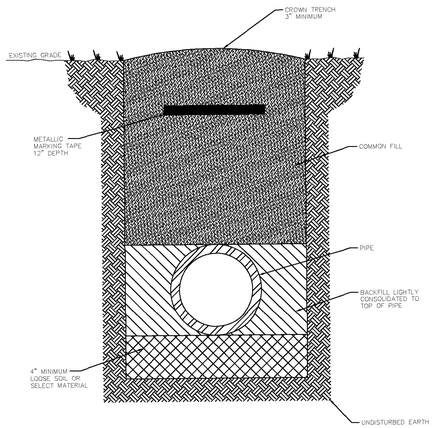

NOTES:
- LOOSE SOIL OR SELECT MATERIAL IS NATIVE SOIL EXCAVATED FROM THE TRENCH FREE OF ROCKS AND FOREIGN MATERIAL.
- COMMON FILL TO BE PLACED AND COMPACTED IN 12" LAYERS. ROLLING EQUIPMENT SHALL NOT BE USED FOR COMPACTION UNTIL A MINIMUM OF 18" OF COMMON FILL HAS BEEN PLACED AND COMPACTED OVER THE PIPE. THREE FEET OF FILL SHALL BE PLACED BEFORE A HYDROHAMMER MAY BE USED FOR COMPACTION.

NTS

CREATED 02/24/03 REVISED	PIPE LAYING CONDITIONS STANDARD UNPAVED AREAS	PROVIDED FOR INFORMATIONAL PURPOSES ONLY. NO MODIFICATIONS WITHOUT WRITTEN PCU APPROVAL.
	PASCO COUNTY UTILITIES	DETAIL 35

5 PIPE LAYING UNPAVED AREAS NTS

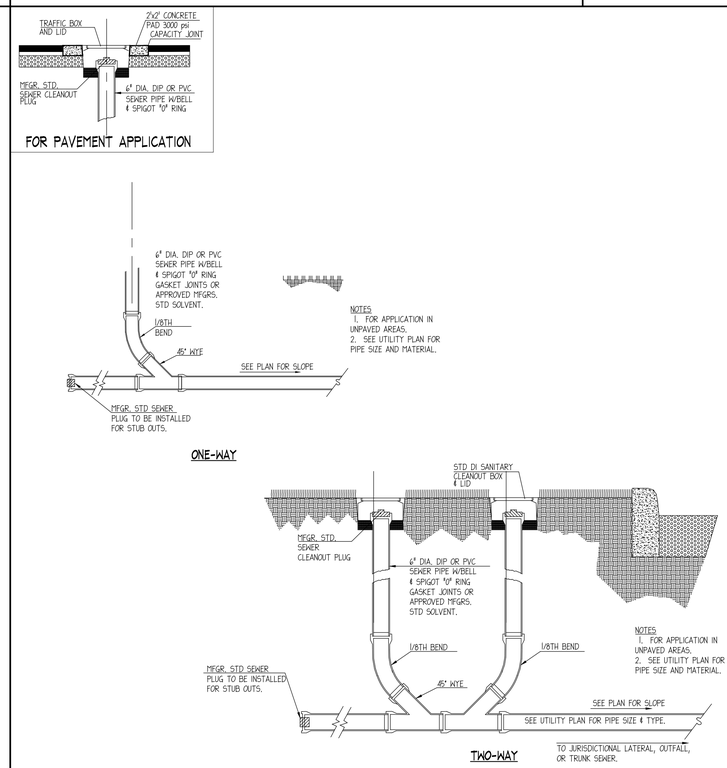

6 SANITARY CLEANOUT NTS

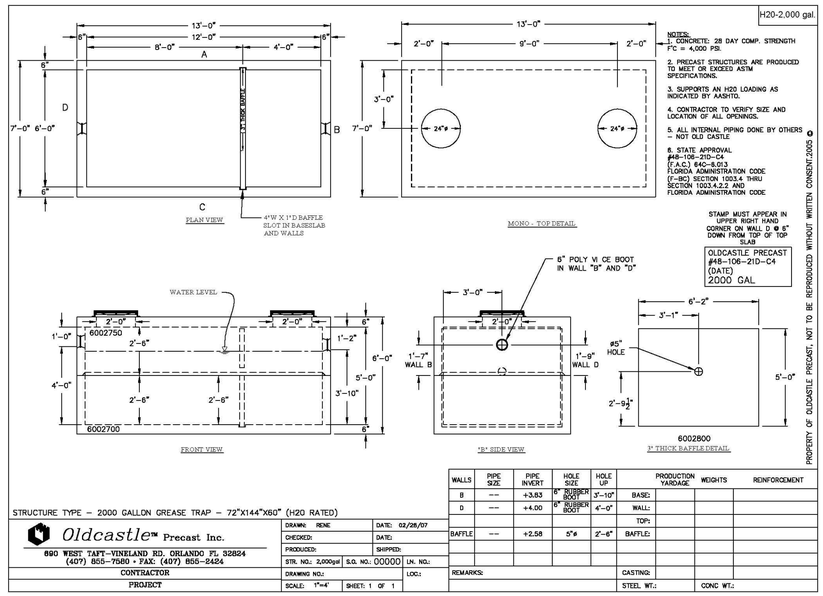

WALLS	PIPE SIZE	PIPE INVERT	HOLE SIZE	HOLE UP	PRODUCTION YARDAGE	WEIGHTS		REINFORCEMENT
B	---	+3.83	6" RUBBER BOOT	3'-10"	BASE:			
D	---	+4.00	6" RUBBER BOOT	4'-0"	WALL:			
					TOP:			
BAFFLE	---	+2.58	5"ø	2'-6"	BAFFLE:			
					CASTING:			
					STEEL WT.:		CONC WT.:	

NOTES:
1. CONCRETE: 28 DAY COMP. STRENGTH F'C = 4,000 PSI.
2. PRECAST STRUCTURES ARE PRODUCED TO MEET OR EXCEED ASTM SPECIFICATIONS.
3. SUPPORTS AN H20 LOADING AS INDICATED BY AASHTO.
4. CONTRACTOR TO VERIFY SIZE AND LOCATION OF ALL OPENINGS.
5. ALL INTERNAL PIPING DONE BY OTHERS – NOT OLD CASTLE.
6. STATE APPROVAL #48-106-21D-C4 (F.A.C.) 64C-6.013 FLORIDA ADMINISTRATION CODE (F-BC) SECTION 1003.4 THRU SECTION 1003.4.2.2 AND FLORIDA ADMINISTRATION CODE

STAMP MUST APPEAR IN UPPER RIGHT HAND CORNER ON WALL D @ 6" DOWN FROM TOP OF TOP SLAB

OLDCASTLE PRECAST
#48-106-21D-C4
(DATE)
2000 GAL

PROPERTY OF OLDCASTLE PRECAST, NOT TO BE REPRODUCED WITHOUT WRITTEN CONSENT.2005 ©

7 2,000 GAL. GREASE TRAP NTS

CONTRACTOR SHALL SUBMIT SHOP DRAWING TO JURISDICTION AND ENGINEER FOR APPROVAL PRIOR TO INSTALLATION.

GRIMAIL CRAWFORD, INC.
ENGINEERING • PLANNING • GIS
3650 MANSELL ROAD
SUITE 495
ALPHARETTA, GA 30022
770.437.8850 844.833.6661 FAX
www.gc-inc.com

PANDA EXPRESS
CYPRESS CREEK TOWN CENTER
GRAND CYPRESS DRIVE
WESLEY CHAPEL, FLORIDA

PLANS FOR:

CLIENT:
PANDA RESTAURANT GROUP, INC.
1683 WALNUT GROVE AVE
ROSEMEAD, CA 91770
PHONE: (626) 372-8119

REVISION HISTORY

--/--/----	--/--/----
--/--/----	--/--/----
--/--/----	--/--/----
--/--/----	--/--/----
--/--/----	--/--/----
--/--/----	--/--/----
--/--/----	--/--/----

THE CIVIL ENGINEER REGULARLY UPDATES ELECTRONIC FILES DURING THE DEVELOPMENT OF A PROJECT. AS A RESULT, THE DATA INCLUDED IN ANY CAD FILE OR DRAWING PRIOR TO ITS FINAL RELEASE DOES NOT NECESSARILY REFLECT THE COMPLETE SCOPE OR CONTENT AS DEFINED IN THE CONTRACT. THE CONTENTS IN THESE FILES MAY THEREFORE BE PRELIMINARY, INCOMPLETE WORK IN PROGRESS, AND SUBJECT TO CHANGE. FURTHERMORE, THE INFORMATION CONTAINED HEREIN IS THE EXCLUSIVE PROPERTY OF THE CIVIL ENGINEER. THE ORIGINAL IDEAS REPRESENTED HERE BY THIS INFORMATION SHALL NOT BE USED, ALTERED, OR REPRODUCED IN ANY MANNER WITHOUT THE EXPRESSED WRITTEN CONSENT OF THE CIVIL ENGINEER. THESE PLANS ARE SUBJECT TO FEDERAL COPYRIGHT LAWS. ANY USE OF SAME WITHOUT EXPRESSED WRITTEN PERMISSION OF THE CIVIL ENGINEER IS PROHIBITED.

GCI PROJ #	140283
DWG NAME	140283 C04.DWG
ISSUE DATE	10/07/15
GCI PROJ MGR	JHP

UTILITY DETAILS I

C04.2

SHEET NUMBER

ISSUED FOR PERMITTING

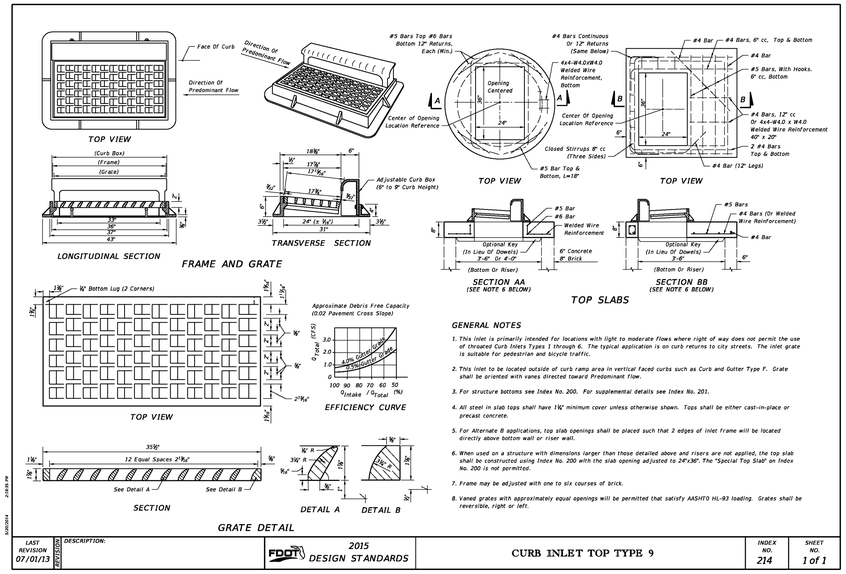

GENERAL NOTES

1. This inlet is primarily intended for locations with light to moderate flows where right of way does not permit the use of threaded Curb Inlets Types 1 through 6. The typical application is on curb returns to city streets. The inlet grate is suitable for pedestrian and bicycle traffic.
2. This inlet to be located outside of curb ramp area in vertical faced curbs such as Curb and Gutter Type F. Grate shall be oriented with vanes directed toward Predominant Flow.
3. For structure bottoms see Index No. 200. For supplemental details see Index No. 201.
4. All steel in slab tops shall have 1½" minimum cover unless otherwise shown. Tops shall be either cast-in-place or precast concrete.
5. For Alternate B applications, top slab openings shall be placed such that 2 such edges of inlet frame will be located directly above bottom wall or riser wall.
6. When used on a structure with dimensions larger than those detailed above and risers are not applied, the top slab shall be constructed using Index No. 200 with the slab opening adjusted to 24"x36". The "Special Top Slab" on Index No. 200 is not permitted.
7. Frame may be adjusted with one to six courses of brick.
8. Vaned grates with approximately equal openings will be permitted that satisfy AASHTO HL-93 loading. Grates shall be reversible, right or left.

LAST REVISION	REVISIONS	DESCRIPTION:				
07/01/13			FDOT DESIGN STANDARDS 2015	CURB INLET TOP TYPE 9	INDEX NO. 214	SHEET NO. 1 of 1

CURB INLET NOTES:
1. CONTRACTOR SHALL SUBSTITUTE GRATE AS SHOWN WITH TYPE C GRATE SHOWN IN DETAIL 3, SHEET C04.3.
2. CONTRACTOR SHALL ENSURE GRATE IS TRAFFIC RATED.
3. CONTRACTOR SHALL USE FDOT STRUCTURE BOTTOM TYPE J FOR CURB INLET. SEE DETAIL 2, SHEET C04.5.
4. CONTRACTOR SHALL SUBMIT SHOP DRAWING OF ENTIRE INLET, GRATE AND STRUCTURE BOTTOM TO ENGINEER FOR APPROVAL PRIOR TO PLACING ORDER.

1 CURB INLET TOP TYPE 9 NTS

■ Note: When specifying/ordering grates, refer to "Choosing the Proper Inlet Grate" on pages 125-126.
For a complete listing of FREE OPEN AREAS and WEIR PERIMETERS of all NEENAH grates, refer to pages 327-332.

R-4400 to R-4899 Series
Square and Rectangular Drainage Grates

The gratings in this series are rated heavy duty when supported on all four sides.
Other special sizes quoted on request in the event none of the standards shown in this series meet your requirements.
In ordering replacement grates to be used on existing catch basins, be sure to specify the exact size of opening in which the grate will be used.
Many of the grates in this series can be adapted to trench frames with support on two sizes. Most are qualified as heavy duty when the short dimension spans the trench.
Advise loading requirements so we can assist you with your choice.

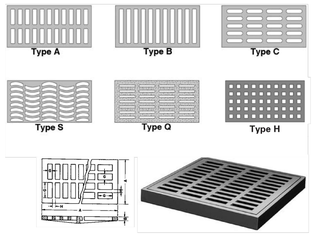

Dimensions in inches

Catalog No.	A	B	G	H	Type
Square - Heavy Duty					
R-4400-A *	8 x 8	1	1 x 5 1/4	1	A
R-4401 *	8 x 8	1	3/8 x 3	3/8	A
R-4408 *	10 1/4 x 10 1/4	1	7/8 x 8 1/4	1	B
R-4441-1 *	12 x 12	1	3/8 x 4 1/2	1	G
R-4511 *	14 x 14	1 1/2	1 1/2 x 5 1/8	1 1/8	A
R-4550 *	15 x 15	1 1/4	3 1/2 x 3 1/2	3/4	H
R-4552 *	16 x 16	1 3/4	1 1/4 x 6 1/4	1 1/4	A
R-4553 *	16 x 16	1 1/4	3/16 x 3 3/8	3/4	A
R-4558 *	17 5/8 x 17 5/8	1 1/4	1 x 5	1/2	C
R-4660 *	18 x 18	1 1/2	3 x 4 1/2	1 1/4	C
R-4662	19 3/4 x 19 3/4	2 1/2	1 3/8 x 8 1/2	1	A
R-4720 *	20 x 20	1 3/4	1 3/8 x 3 1/2	1 1/4	C
R-4721-A	21 x 21	1 3/4	1 1/2 x 8	1 1/4	A
R-4725 *	21 x 21	2	3 x 3	1	H
R-4760 *	22 x 22	1 3/4	3 x 5 1/2	1	C
R-4765	23 x 23	2	1 x 6 1/2	1	A
R-4808-A *	24 x 24	2	1/2 x 4 1/2	1 5/8	D
R-4810 * ◊	24 x 24	2	1 3/4 x 6	1 1/4	C
R-4820 * ¥	24 x 24	2	1 3/4 x 5 7/8	1 3/8	C
R-4826 * * ▲	24 x 24	2	1 x 6	1 1/4	A
R-4832 *	24 x 24	1 5/8	1 1/16 x 4 3/4	1	C
R-4832-B ¥	26 x 26	1 3/4	1 1/16 x 4	1	C
R-4833 *	26 x 26	2	2 x 7	1	A
R-4836	26 x 26	2	1 1/8 x 4 3/4	1 1/4	C
R-4850 *	27 x 27	2	2 1/2 x 7 1/2	1	C
R-4852 *	27 x 27	2	1 1/2 x 5	1	C
R-4852-A *	27 x 27	1	1 1/2 x 5	1	C
R-4859-C * ▰	27 x 27	1	2 x 7	1	A
R-4859-D * ▰	27 1/2 x 27 1/2	1	3/8 x 7	1 1/8	G
R-4859-S * ▰	27 1/2 x 27 1/2	1	1 1/2 x 4 3/4	1	S
R-4871 * § ▰	27 1/2 x 27 1/2	1	2 x 24	1	B
R-4880 *	28 x 28	2	1 1/2 x 7 1/4	1	C
R-4880-C *	30 x 30	1 1/2	1 1/4 x 5 7/8	1 1/4	C
R-4882 * ▲	34 x 34	2	2 x 14 1/2	1 1/8	A
R-4882-A * ▲	34 x 34	2	1 x 9	1 1/8	A
R-4884-A * **	36 x 36	1 3/4	2 x 4	1 3/8	C

Catalog No.	A	B	G	H	Type
Rectangular - Heavy Duty					
R-4389-D	6 x 12	1 1/4	3/4 x 4	1	B
R-4390	6 x 24	1	3/4 x 4 1/2	1	B
R-4403	8 x 14	1	1 1/2 x 5 7/8	1/2	A
R-4404-C	8 x 24	1	1 1/16 x 6	1	B
R-4406	8 x 24	1 3/4	1 5/16 x 2 5/8	1	B
R-4406-1	8 x 24	1 3/4	1 x 5	3/4	A
R-4406-2	8 x 24	1 3/4	1 x 2	1	C
R-4406-C	9 1/4 x 23 7/8	1	1 x 2 7/8	1	A
R-4406-P	9 x 23 7/8	1 1/2	1/4 x 2 5/16	1	P
R-4407-2A	9 1/2 x 24	1 3/4	1 x 7 1/2	1	B
R-4409	10 x 17 3/4	1 1/2	1 x 3 1/2	1	A
R-4409-A	10 x 24	1 3/4	1 1/4 x 4 3/4	1	C
R-4409-C *	10 x 24	1 3/4	1 x 7	1	B
R-4409-E *	10 x 24	1 3/4	1 x 3 1/2	1	A
R-4409-G	10 x 24	1 1/2	2 x 8	1	B
R-4421 *	10 x 40	1 1/8	1 1/4 x 8 1/2	1	C
R-4423-A	10 1/4 x 48	1 5/8	1 1/2 x 3 1/2	1	A
R-4424	10 1/2 x 23 1/8	1 3/4	2 x 2	1	H
R-4430-1	11 x 23 7/8	1 1/8	1/4 x 3 5/16	1	P
R-4430-A	11 x 24	1 1/2	3/4 x 4 1/8	3/4	A
R-4430-B	11 1/2 x 24	1 1/2	1 x 6 5/8	1	C
R-4435-1	11 7/8 x 14	2	1 x 5 1/2	1	C
R-4443	12 x 14	1 3/4	1 1/2 x 5 1/4	1 1/4	A
R-4449 *	12 x 24	1 1/2	1 1/2 x 4 1/4	1	A
R-4450 *	12 x 24	1 3/4	1 x 4 1/2	1	A
R-4450-A *	12 x 24	1 3/4	2 x 2	1	H
R-4451 *	12 x 24	2	1 1/2 x 3 3/4	1	C
R-4454	12 x 26	1 1/2	1/2 x 11 1/2	1/2	C
R-4460 *	12 x 30	2	1 1/4 x 4	1	A
R-4462 *	12 x 35 3/4	1 1/2	3/4 x 9	1	B
R-4470 *	12 x 48	1 3/4	1 x 4 1/2	1	A
R-4523	14 x 23 7/8	1	1 1/16 x 5 1/2	1	A
R-4525 *	14 x 24	2	1 x 5 1/2	1	A
R-4530	14 1/2 x 22	2	1 1/2 x 5 1/2	1 1/4	A
R-4780-A * **	22 x 44	1 3/4	3 x 5 1/2	1 1/16	C
R-4766 *	21 x 28 3/4	2 1/2	1 x 17	1 1/8	B

* Angle frame available.
** Grate in two pieces.
*** Grate in three pieces.
§ Grate lettered "DUMP NO WASTE – DRAINS TO RIVER".
◊ Available with Riverwalk Style grate.
▲ Light Duty.
¥ Convex.
▰ Meets traffic load called for in AA-6005 of 25,000# proof load.

CLICK HERE to return to the Table of Contents

2 GRATE INLET R4890 NTS

■ Note: When specifying/ordering grates, refer to "Choosing the Proper Inlet Grate" on pages 125-126.
For a complete listing of FREE OPEN AREAS and WEIR PERIMETERS of all NEENAH grates, refer to pages 327-332.

R-4400 to R-4899 Series
Square and Rectangular Drainage Grates (continued)

Dimensions in inches

Catalog No.	A	B	G	H	Type
Rectangular - Heavy Duty					
R-4531	14 1/2 x 23 7/8	1	1 x 5	1	A
R-4540	14 1/2 x 26 1/2	2	2 1/4 x 4	1	C
R-4541 *	14 1/2 x 28	1 3/4	1 1/4 x 5	1 1/4	A
R-4544	14 1/2 x 37 3/4	1 3/4	2 x 5 3/8	1 1/4	A
R-4545	14 1/2 x 48	1 3/4	1 1/4 x 5	1 1/4	A
R-4548	15 x 20 1/2	1 1/2	2 x 2	3/4	H
R-4570-1	15 x 23	1 3/4	1 1/2 x 5 1/2	1 1/8	A
R-4570-2	15 x 23 7/8	1 1/2	1 x 6	1	A
R-4573 *	15 x 30	2 1/2	1 1/8 x 5 1/2	1	A
R-4575-A *	15 x 36	1 3/4	1 13/16 x 6 1/2	3/4	A
R-4579	15 1/8 x 23	1 1/2	1 3/8 x 5 1/2	1 3/8	A
R-4583	15 1/2 x 22 1/4	1 3/4	1 5/8 x 5 1/2	1 3/8	A
R-4584	15 1/2 x 36	1 3/4	1 1/2 x 5 1/4	1 3/8	A
R-4585	15 1/2 x 39	1 3/4	1 7/8 x 5 7/8	1 1/4	A
R-4586 *	15 3/4 x 36	1 3/4	1 1/2 x 5 1/4	1 3/8	A
R-4600	16 x 23	2	1 1/4 x 3 3/4	1	A
R-4603-A *	16 x 24	1 1/8	3/4 x 5 1/2	1	A
R-4604	16 x 24	1 1/2	2 x 4	7/8	C
R-4604-C	16 x 24	2	2 x 5	2	A
R-4604-D	16 x 24	2 1/2	2 1/2 x 6 5/8	3/4	A
R-4608	16 1/2 x 19 3/4	1 1/2	1 1/4 x 6	1	A
R-4610	16 1/2 x 22	1 3/4	1 1/2 x 4	1	A
R-4620	17 x 19	2	1 1/4 x 4 1/4	1 1/8	A
R-4630	17 x 20	1 1/2	1 1/4 x 6 1/2	1	C
R-4632	17 x 21	2	1 3/8 x 8 3/4	1	C
R-4640	17 x 21 1/2	1 3/4	2 1/2 x 4 1/4	1	A
R-4641	17 x 23 7/8	1	1 1/16 x 7	1	A
R-4641-A *	17 x 24	2	1 x 7	7/8	A
R-4641-C *	17 x 24	2	1 x 6 1/2	1	C
R-4641-F *	17 x 34	1 1/2	1 1/2 x 6 3/4	1	A
R-4649	17 1/4 x 24	1 3/4	1 x 6 1/2	1	A
R-4652 *	17 3/4 x x 29 3/4	2	1 1/2 x 4 1/2	1 1/8	A
R-4670-A *	18 x 24	1 1/2	1 1/8 x 6 3/4	1 1/8	A
R-4671 *	18 x 24	2	1 x 6 1/2	1 1/16	A
R-4672 *	18 x 24	2	1 3/8 x 4 1/2	1 1/8	C
R-4689 *	18 x 27 1/4	2	2 x 6 3/4	1	C
R-4692-A	18 x 34	2 1/4	1 7/16 x 8	1	C
R-4698 *	18 x 36	1 3/4	2 x 4	3 3/8	A
R-4710 * ▲	17 3/4 x 35 3/4	2	1 3/4 x 6 1/4	1 1/8	C
R-4711 *	18 x 39	2	1 1/4 x 5 1/2	1 1/4	C
R-4718	18 3/4 x 36 3/4	2	2 x 8	1	A
R-4730 *	19 1/2 x 32	1 1/2	2 x 5	1	A

Dimensions in inches

Catalog No.	A	B	G	H	Type
Rectangular - Heavy Duty					
R-4731 *	19 1/2 x 39	1 1/2	2 x 4 1/2	1	C
R-4732	19 1/2 x 39	1 3/4	1 x 7 1/2	1	A
R-4735	20 x 23 7/8	1	1 1/16 x 8 1/4	1	A
R-4736 *	20 x 24	2	1 1/2 x 2 1/2	1 1/4	C
R-4738 *	20 x 24	2	1 x 5	1	A
R-4739 *	20 x 24	2	1 1/8 x 4 3/4	1	C
R-4740 *	20 x 28 1/2	2	1 3/4 x 8 1/4	1	C
R-4750 *	20 x 30	2	1 3/4 x 6 1/4	1	C
R-4750-1	20 x 48	2	1 1/2 x 5	1	A
R-4751	20 1/2 x 27	2	1 3/4 x 5 1/2	1	C
R-4752	20 1/2 x 36	1 7/8	2 x 5 3/4	1 1/8	C
R-4766 *	21 x 28 3/4	2 1/2	1 x 17	1 1/8	B
R-4755-B *	21 x 42	1 1/2	1 1/2 x 5 1/2	1	A
R-4755-C *	21 x 42	1 1/2	1 1/2 x 5 7/8	1	C
R-4759	22 x 23	1 3/4	1 1/2 x 6	1	C
R-4762 *	22 x 30	1 1/2	2 x 6 1/4	1	C
R-4780 *	22 x 37	2	2 x 8	1	C
R-4780-A * **	22 x 44	1 3/4	3 x 5 1/2	1	A or C
R-4781 *	22 x 48	2 1/2	1 5/8 x 5 3/8	1 1/4	C
R-4795 *	22 1/2 x 45	1 1/2	2 x 6	1	A
R-4798	23 1/4 x 36 1/2	2 3/4	1 1/2 x 7 1/4	1	C
R-4821-A *	23 7/8 x 26	2	1 9/16 x 4 15/16	1 1/4	C
R-4825 *	24 x 30	1 1/2	1 1/2 x 4 1/4	1 1/4	C
R-4825-A *	24 x 30	2 1/4	1 1/4 x 4 3/4	1	A
R-4825-B *	24 x 30	2 1/4	1 1/2 x 6	1	C
R-4828 *	24 x 33	2 1/4	1 x 4 1/2	1	A
R-4829 *	24 x 33	2 1/4	1 1/2 x 6 1/2	1 1/4	C
R-4837	24 x 35	2 1/2	1 1/2 x 6 1/2	1 1/2	A
R-4839 *	24 x 35 7/8	1 3/4	7/8 x 9 3/4	1	A
R-4840 *	24 x 36	2	2 x 4 3/4	1	C
R-4843 *	24 x 36	1 3/4	1 3/4 x 6	1	A
R-4853	24 x 39	2 1/2	1 3/4 x 5 3/4	1 5/8	A
R-4853-A	24 x 45	3	1 1/2 x 6 1/4	1 1/4	A
R-4853-B1	24 x 51	3	1 1/2 x 5	1 1/4	C
R-4855	26 x 30	2	1 1/2 x 5	1 1/4	A
R-4857	26 x 45	2	1 1/2 x 5 1/2	1	A
R-4890 *	28 x 37	2	1 3/4 x 7 5/8	1 1/4	C
R-4891 **	30 x 48	1 1/2	1 1/2 x 4 1/4	1 1/4	A
R-4893 ***	30 x 78	2	1 1/2 x 5	1 1/4	C
R-4893-B *	32 x 34	2	1 x 2	1	C
R-4894 *	33 x 36	2	1 1/2 x 6 1/2	1 1/4	C
R-4895-2 ***	36 x 66	2	1 1/2 x 6 1/2	1 1/4	A

* Angle frame available.
** Grate in two pieces.
*** Grate in three pieces.
§ Grate lettered "DUMP NO WASTE – DRAINS TO RIVER".
◊ Available with Riverwalk Style grate.
▲ Light Duty.
¥ Convex.
▰ Meets traffic load called for in AA-6005 of 25,000# proof load.

GRATE SHALL BE TRAFFIC RATED BASED ON H-20 LOADING.

CLICK HERE to return to the Table of Contents

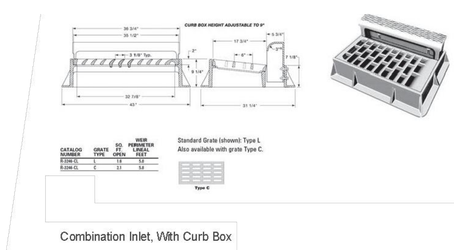

GRATE

3 CURB INLET GRATE TYPE C NTS

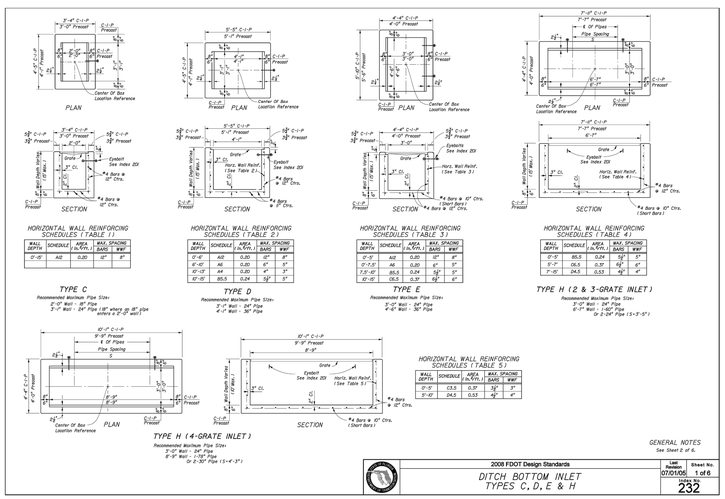

CONTRACTOR SHALL USE R4890 GRATE FROM DETAIL 2, SHEET C04.3.
CONTRACTOR SHALL ENSURE GRATE IS TRAFFIC RATED.

4 GRATE INLET, TYPE C NTS

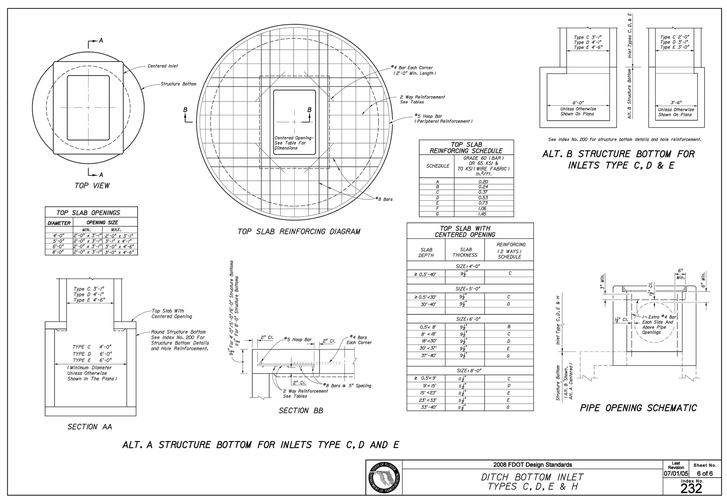

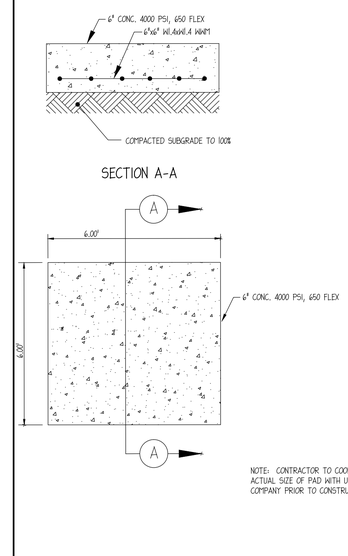

NOTE: CONTRACTOR TO COORDINATE ACTUAL SIZE OF PAD WITH UTILITY COMPANY PRIOR TO CONSTRUCTION.

5 TRANSFORMER PAD NTS

GRIMAIL CRAWFORD, INC.
ENGINEERING - PLANNING - GIS
3650 MANSELL ROAD
SUITE 495
ALPHARETTA, GA 30022
770.437.8850 844.833.6441 FAX
www.gc-inc.com

PANDA EXPRESS
CYPRESS CREEK TOWN CENTER
GRAND CYPRESS DRIVE
WESLEY CHAPEL, FLORIDA

PANDA EXPRESS CHINESE KITCHEN

PLANS FOR:

CLIENT:
PANDA RESTAURANT GROUP, INC.
1683 WALNUT GROVE AVE
ROSEMEAD, CA 91770
PHONE: (626) 372-8119

REVISION HISTORY

THE CIVIL ENGINEER REGULARLY UPDATES ELECTRONIC FILES DURING THE DEVELOPMENT OF A PROJECT. AS A RESULT, THE DATA INCLUDED IN ANY CAD FILE OR DRAWING PRIOR TO ITS FINAL RELEASE DOES NOT NECESSARILY REFLECT THE COMPLETE SCOPE OR CONTENT AS DEFINED IN THE CONTRACT. THE CONTENTS IN THESE FILES MAY THEREFORE BE PRELIMINARY, INCOMPLETE WORK IN PROGRESS, AND SUBJECT TO CHANGE. THEREFORE, THE INFORMATION CONTAINED HEREIN IS THE EXCLUSIVE PROPERTY OF THE CIVIL ENGINEER. THE ORIGINAL IDEAS REPRESENTED HERE BY THIS INFORMATION SHALL NOT BE USED, ALTERED, OR REPRODUCED IN ANY MANNER WITHOUT THE EXPRESSED WRITTEN CONSENT OF THE CIVIL ENGINEER. THESE PLANS ARE SUBJECT TO FEDERAL COPYRIGHT LAWS. ANY USE OF SAME WITHOUT EXPRESSED WRITTEN PERMISSION OF THE CIVIL ENGINEER IS PROHIBITED.

GCI PROJ #	140283
DWG NAME	140283 C04.DWG
ISSUE DATE	10/07/15
GCI PROJ MGR	JMP

UTILITY DETAILS II

C04.3
SHEET NUMBER

ISSUED FOR PERMITTING

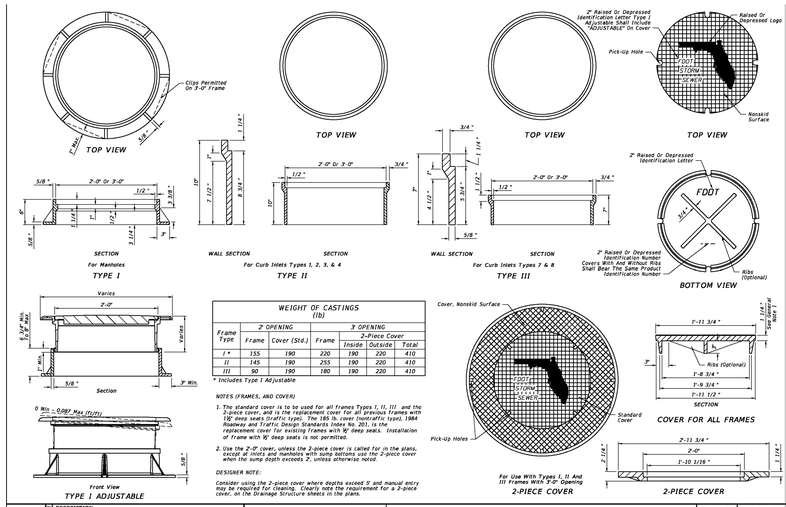

WEIGHT OF CASTINGS (lb)						
Frame Type	2' OPENING		3' OPENING			
	Frame	Cover (Std.)	Frame	2-Piece Cover		
				Inside	Outside	Total
I *	155	190	220	190	220	410
II	145	190	255	190	220	410
III	90	190	180	190	220	410

* Includes Type I Adjustable

NOTES (FRAMES, AND COVER)

1. The standard cover is to be used for all frames Types I, II, III and the Type I Adjustable. The standard cover fits all previous frames with 1/8" deep seats (traffic type). The 185 lb. cover (nontraffic type), 1984 Roadway and Traffic Design Standards Index No. 201, is the replacement cover for existing frames with 5/8" deep seats. Installation of frame with 5/8" deep seats is not permitted.
2. Use the 2'-0" cover, unless the 2-piece cover is called for in the plans. Contact the Maintenance Office before specifying use the 2-piece cover when the sump depth exceeds 2', unless otherwise noted.

DESIGNER NOTE:

Consider using the 2-piece cover where depths exceed 5' and manual entry may be required for cleaning. Clearly note the requirement for a 2-piece cover, on the Drainage Structure sheets in the plans.

LAST REVISION	REVISION	DESCRIPTION:	FDOT 2015 DESIGN STANDARDS	SUPPLEMENTARY DETAILS FOR MANHOLES & INLETS	INDEX NO.	SHEET NO.
01/01/12					201	1 of 5

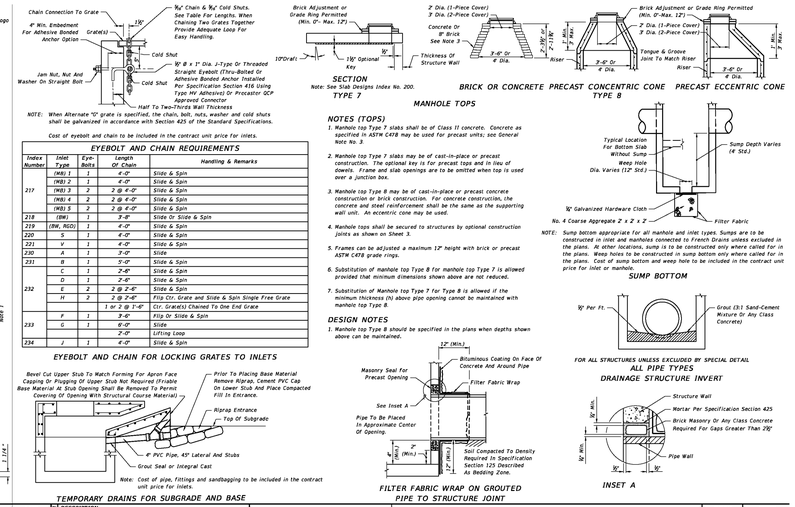

NOTES (TOPS)

1. Manhole top Type 7 slabs shall be of Class II concrete. Concrete as specified in ASTM C478 may be used for precast units; see General Note No. 3.
2. Manhole top Type 7 slabs may be of cast-in-place or precast construction. The optional key is for precast tops and in lieu of dowels. Frame and slab openings are to be omitted when top is used over a junction box.
3. Manhole top Type 8 may be of cast-in-place or precast concrete construction or brick construction. For concrete construction, the concrete and steel reinforcement shall be the same as the supporting wall unit. An eccentric cone may be used.
4. Manhole tops shall be secured to structures by optional construction joints as shown on Sheet 3.
5. Frames can be adjusted a maximum 12" height with brick or precast ASTM C478 grade rings.
6. Substitution of manhole top Type 8 for manhole top Type 7 is allowed provided that minimum dimensions shown above are not reduced.
7. Substitution of Manhole top Type 7 for Type 8 is allowed if the minimum thickness (h) above pipe opening cannot be maintained with manhole top Type 8.

DESIGN NOTES

1. Manhole top Type 8 should be specified in the plans when depths shown above can be maintained.

LAST REVISION	REVISION	DESCRIPTION:	FDOT 2015 DESIGN STANDARDS	SUPPLEMENTARY DETAILS FOR MANHOLES & INLETS	INDEX NO.	SHEET NO.
07/01/12					201	2 of 5

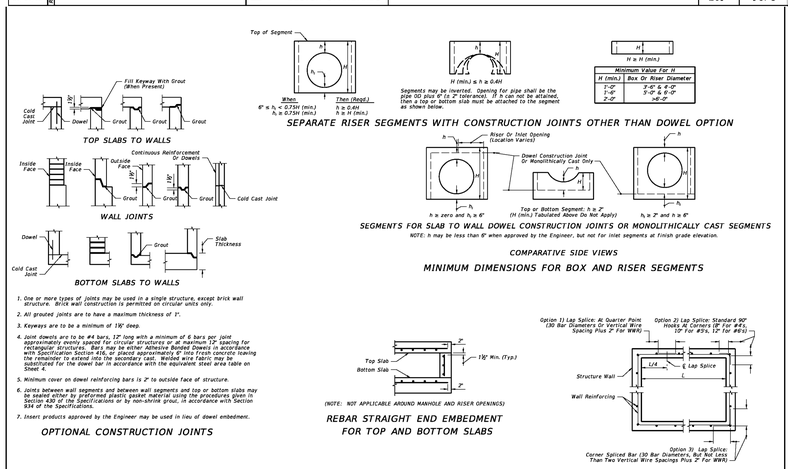

LAST REVISION	REVISION	DESCRIPTION:	FDOT 2015 DESIGN STANDARDS	SUPPLEMENTARY DETAILS FOR MANHOLES & INLETS	INDEX NO.	SHEET NO.
07/01/14					201	3 of 5

EXAMPLE TABLE OF EQUIVALENT STEEL AREA

SCHEDULE	GRADE 60 REINFORCING BAR		EQUIVALENT GRADE 40 REINFORCING BAR		EQUIVALENT 65 KSI SMOOTH WELDED WIRE REINFORCEMENT		EQUIVALENT 70 KSI DEFORMED WELDED WIRE REINFORCEMENT	
	Bar Size & Spacing	Steel Area (in²/ft)	Bar Size & Spacing	Min. Steel Area (in²/ft)	Style Designation	Min. Steel Area (in²/ft)	Style Designation	Min. Steel Area (in²/ft)
A	#3 @ 6½" Ctrs. #4 @ 12" Ctrs.	0.20	#3 @ 4½" Ctrs. #4 @ 8" Ctrs. #5 @ 12" Ctrs.	0.30	3"x3"-W4.6xW4.6 4"x4"-W5.2xW9.2 6"x6"-W12xW9.2	0.1846	3"x3"-D4.3xD4.3 4"x4"-D5.7xD5.7 6"x6"-D8.6xD8.6	0.1714
B	#3 @ 5½" Ctrs. #4 @ 10" Ctrs.	0.24	#3 @ 3½" Ctrs. #4 @ 6½" Ctrs. #5 @ 10" Ctrs.	0.36	3"x3"-W5.5xW5.5 4"x4"-W7.4xW7.4 6"x6"-W11.1xW11.1	0.2215	3"x3"-D5.5xD5.5 4"x4"-D6.9xD6.9 6"x6"-D10.3xD10.3	0.2057
Special 1	#3 @ 5" Ctrs. #4 @ 9" Ctrs.	0.267	#3 @ 3" Ctrs. #4 @ 6" Ctrs. #5 @ 9" Ctrs.	0.40	3"x3"-W6.2xW6.2 4"x4"-W8.2xW8.2 6"x6"-W12.3xW12.3	0.2465	3"x3"-D7.0xD7.0 4"x4"-D7.6xD7.6 6"x6"-D11.4xD11.4	0.2289
C	#3 @ 3½" Ctrs. #4 @ 6½" Ctrs. #5 @ 10" Ctrs.	0.37	#4 @ 4" Ctrs. #5 @ 6½" Ctrs. #6 @ 9½" Ctrs.	0.555	3"x3"-W8.5xW8.5 4"x4"-W11.4xW11.4 6"x6"-W17.1xW17.1	0.3415	3"x3"-D7.9xD7.9 4"x4"-D10.6xD10.6 6"x6"-D15.9xD15.9	0.3171
D	#4 @ 4½" Ctrs. #5 @ 7" Ctrs. #6 @ 10" Ctrs.	0.53	#4 @ 2" Ctrs. #5 @ 4½" Ctrs. #6 @ 6½" Ctrs.	0.795	3"x3"-W12.2xW12.2 4"x4"-W16.3xW16.3 6"x6"-W24.5xW24.5	0.4892	3"x3"-D11.4xD11.4 4"x4"-D15.1xD15.1 6"x6"-D22.7xD22.7	0.4543
E	#4 @ 3" Ctrs. #5 @ 5" Ctrs. #6 @ 7" Ctrs.	0.73	#5 @ 3½" Ctrs. #6 @ 5" Ctrs. #7 @ 6½" Ctrs.	1.095	3"x3"-W16.8xW16.8 4"x4"-W22.5xW22.5 6"x6"-W33.7xW33.7	0.6738	3"x3"-D15.6xD15.6 4"x4"-D20.9xD20.9 6"x6"-D31.3xD31.3	0.6257
F	#5 @ 3½" Ctrs. #6 @ 5" Ctrs. #7 @ 7" Ctrs.	1.06	#6 @ 3" Ctrs. #7 @ 4½" Ctrs. #8 @ 6" Ctrs.	1.59	3"x3"-W24.5xW24.5 4"x4"-W32.6xW32.6 6"x6"-W48.9xW48.9	0.9785	3"x3"-D22.7xD22.7 4"x4"-D30.3xD30.3 6"x6"-D45.4xD45.4	0.9086
Special 2	#5 @ 3" Ctrs. #6 @ 4" Ctrs. #7 @ 5½" Ctrs.	1.24	#7 @ 4" Ctrs. #8 @ 5" Ctrs.	1.86	3"x3"-W28.6xW28.6 4"x4"-W38.2xW38.2 6"x6"-W57.2xW57.2	1.1446	3"x3"-D26.6xD26.6 4"x4"-D35.4xD35.4 6"x6"-D53.1xD53.1	1.0629
G	#6 @ 3½" Ctrs. #7 @ 5" Ctrs.	1.46	#7 @ 3" Ctrs. #8 @ 4" Ctrs.	2.19	3"x3"-W33.7xW33.7 4"x4"-W44.9xW44.9	1.3477	3"x3"-D31.3xD31.3 4"x4"-D41.7xD41.7	1.2514

NOTES FOR PRECAST OPTIONS & EQUIVALENT REINFORCEMENT SUBSTITUTION

1. Details for optional precast inlet construction up to depths of 15' are shown on the inlet indexes.
2. When precast units are used in conjunction with Alt. "B" Structure Bottoms, Index No. 200, the interior dimensions of an Alt. "B" Bottom can be adjusted to reflect these inlet interior dimensions.
3. Concrete which meets the requirements of ASTM C478 or Class IV must be used for precast structures constructed with 6" wall or slab thickness.
4. Reinforcement can be either deformed bar reinforcement or welded wire reinforcement. Bar reinforcement other than 60 ksi may be used, however only two grades are recognized; Grade 40 and Grade 60. Smooth welded wire reinforcement, will be recognized as having a design strength of 65 ksi and deformed welded wire reinforcement will be recognized as having a design strength of 70 ksi. The area of reinforcement required may be adjusted in accordance with the Equivalent Steel Area Table provided. For bars and spacings not given, the steel area required can be determined by the following equations:

Grade 40 Steel Area = $A_s 40 = \frac{60}{40} \times A_s 60$

Smooth Welded Wire Reinforcement Steel Area = $A_s 65 = \frac{60}{65} \times A_s 60$

Deformed Welded Wire Reinforcement Steel Area = $A_s 70 = \frac{60}{70} \times A_s 60$

continued...

When a reduced area of reinforcement is provided, any maximum bar spacing shown must also be reduced as determined by the following equations, unless otherwise shown:

Max. Grade 40 Bar Spacing = Grade 60 Bar Spacing
Max. Smooth Welded Wire Spacing = Grade 60 Bar Spacing x 0.86
Max. Deformed Welded Wire Spacing = Grade 60 Bar Spacing x 0.74

When an increased area of reinforcing is provided, then the maximum bar spacing may be increased by the squared ratio of increased steel area, but not to exceed 12":

Max. Bar Spacing Provided ≤ Max. Bar Spacing Required x $\left(\frac{\text{Steel Area Provided}}{\text{Min. Steel Area Required}}\right)^2$

In no case will reinforcement with wires smaller than W3.1 or D3.1, or spacings greater than 8" be permitted. Bar reinforcement shall show the minimum yield designation grade mark or either the number 60 or one (1) grade mark line to be acceptable at the higher value. Maximum bar spacing shall not be greater than two (2) times the slab thickness with a maximum spacing of 12" or three (3) times the wall thickness, with a maximum spacing of 18" for vertical bars and 12" for horizontal bars. Wires smaller than W3.1 or D3.1 are permitted in the walls of ASTM C 478 round structure bottoms and round risers.

GENERAL NOTES

1. For square or rectangular precast drainage structures, either deformed or smooth welded wire reinforcement in accordance with Specification Section 931:
   a) Width and length of the unit is four times the spacing of the cross wires.
   b) Wire reinforcement shall be continuous around the box, and lapped in accordance with Option 1 or 3 as shown in the Wall Reinforcing Splice Details.
2. Horizontal steel in the walls of rectangular structures shall be lap spliced in accordance with Option 1, 2 or 3 as shown in the Wall Reinforcing Splice Details.
3. Welding of splices and laps is permitted. The requirements and restrictions placed on welding in AASHTO M259 shall apply.
4. Rebar straight end embedment of peripheral reinforcement may be used in lieu of ACI standard hooks for top and bottom slabs except when hooks are specifically called for in the plans or standard drawings.
5. Concrete as specified in ASTM C478, (4000 psi) may be used in lieu of Class II concrete in precast items manufactured in plants which meet the requirements of Section 449 of the Specifications.
6. Precast opening for pipe shall be the pipe OD plus 6" (± 2" tolerance). Mortar used to seal the pipe into the opening will be of such a mix that shrinkage will not cause leakage into or out of the structure. Dry-pack mortar may be used in lieu of brick and mortar construction to seal openings less than 2½" wide.
7. For pay item purposes, the height used to determine if a drainage structure is greater than 10 feet shall be computed using:
   a) the elevation of the top of the manhole lid,
   b) the grate elevation or the theoretical gutter grade elevation of an inlet, or
   c) the outside top elevation of a junction box less the flow line elevation of the lowest pipe or to top of sump floor.

LAST REVISION	REVISION	DESCRIPTION:	FDOT 2015 DESIGN STANDARDS	SUPPLEMENTARY DETAILS FOR MANHOLES & INLETS	INDEX NO.	SHEET NO.
07/01/13					201	4 of 5

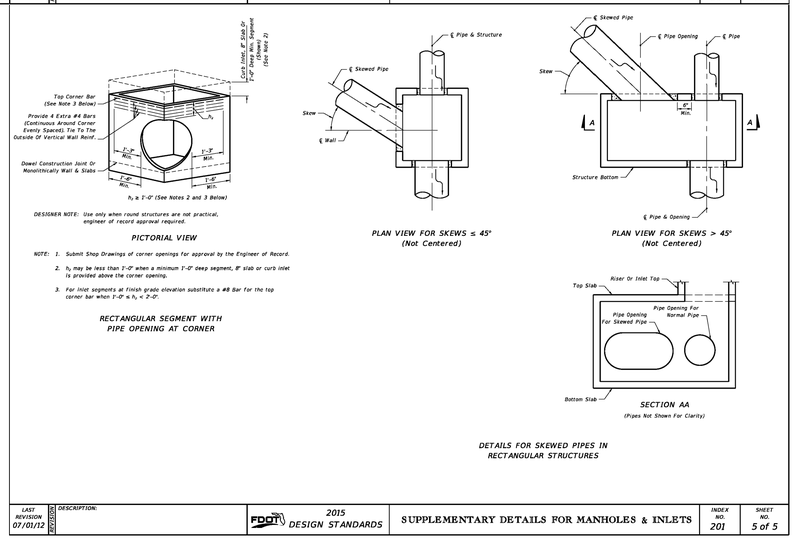

LAST REVISION	REVISION	DESCRIPTION:	FDOT 2015 DESIGN STANDARDS	SUPPLEMENTARY DETAILS FOR MANHOLES & INLETS	INDEX NO.	SHEET NO.
07/01/12					201	5 of 5

1 JUNCTION BOX NTS

GRIMAIL CRAWFORD, INC.
ENGINEERING · PLANNING · GIS
3650 MANSELL ROAD
SUITE 495
ALPHARETTA, GA 30022
770.437.8850 844.833.6661 FAX
www.gc-inc.com

PANDA EXPRESS
CYPRESS CREEK TOWN CENTER
GRAND CYPRESS DRIVE
WESLEY CHAPEL, FLORIDA

PANDA EXPRESS · CHINESE KITCHEN

PLANS FOR:

CLIENT:
PANDA RESTAURANT GROUP, INC.
1683 WALNUT GROVE AVE
ROSEMEAD, CA 91770
PHONE: (626) 372-8119

REVISION HISTORY

--/--/----	--/--/----
--/--/----	--/--/----
--/--/----	--/--/----
--/--/----	--/--/----
--/--/----	--/--/----
--/--/----	--/--/----
--/--/----	--/--/----

THE CIVIL ENGINEER REGULARLY UPDATES ELECTRONIC FILES DURING THE DEVELOPMENT OF A PROJECT. AS A RESULT, THE DATA INCLUDED IN ANY CAD FILE OR DRAWING PRIOR TO ITS FINAL RELEASE DOES NOT NECESSARILY REFLECT THE COMPLETE SCOPE OR CONTENT AS DEFINED IN THE CONTRACT. THE CONTENTS IN THESE FILES MAY THEREFORE BE PRELIMINARY, INCOMPLETE WORK IN PROGRESS, AND SUBJECT TO CHANGE. FURTHERMORE, THE INFORMATION CONTAINED HEREIN IS THE EXCLUSIVE PROPERTY OF THE CIVIL ENGINEER. THE ORIGINAL IDEAS REPRESENTED HERE BY THIS INFORMATION SHALL NOT BE USED, ALTERED, OR REPRODUCED IN ANY MANNER WITHOUT THE EXPRESSED WRITTEN CONSENT OF THE CIVIL ENGINEER. THESE PLANS ARE SUBJECT TO FEDERAL COPYRIGHT LAWS. ANY USE OF SAME WITHOUT EXPRESSED WRITTEN PERMISSION OF THE CIVIL ENGINEER IS PROHIBITED.

GCI PROJ #	140283
DWG NAME	140283 C04.DWG
ISSUE DATE	10/07/15
GCI PROJ MGR	JMP

UTILITY DETAILS III

C04.4
SHEET NUMBER

ISSUED FOR PERMITTING

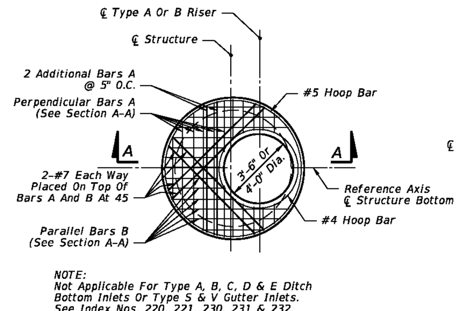

NOTE:
Not Applicable For Type A, B, C, D & E Ditch Bottom Inlets Or Type S & V Gutter Inlets.
See Index Nos. 220, 221, 230, 231 & 232.

TOP SLAB REINFORCING STEEL DIAGRAM
(ALTERNATE A)

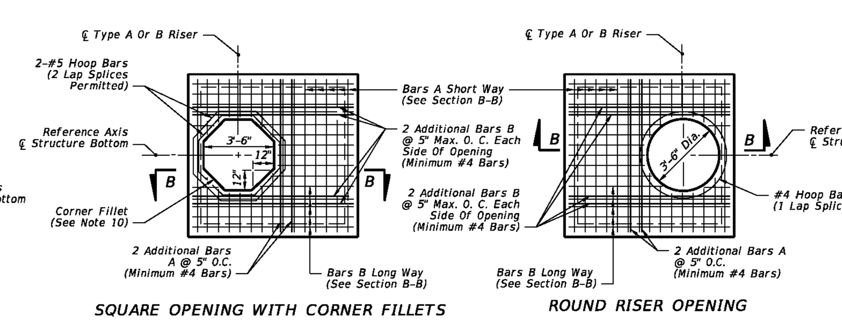

SQUARE OPENING WITH CORNER FILLETS

ROUND RISER OPENING

TOP SLAB REINFORCING STEEL DIAGRAM
(ALTERNATE B)

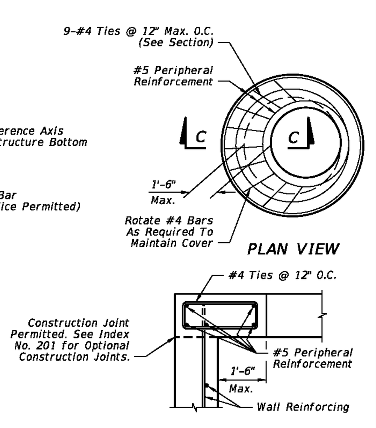

PLAN VIEW

SECTION C-C
SPECIAL TOP SLAB*

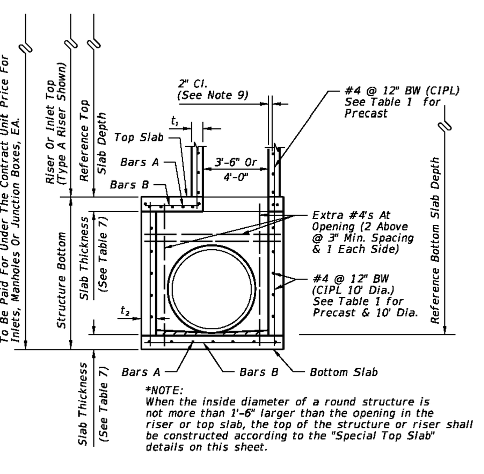

*NOTE:
When the inside diameter of a round structure is not more than 1'-6" larger than the opening in the riser or top slab, the top of the structure or riser shall be constructed according to the "Special Top Slab" details on this sheet.

SECTION A-A
(ALTERNATE A)

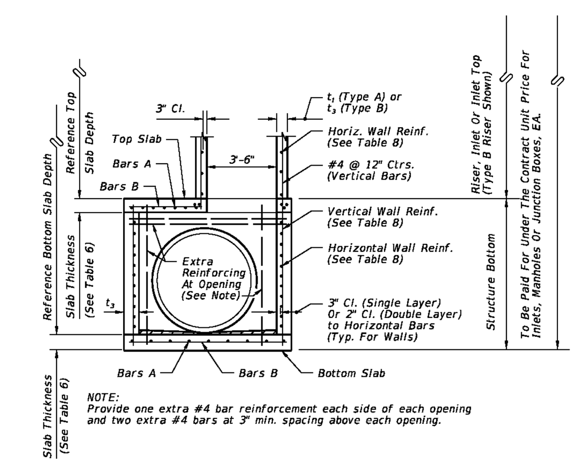

NOTE:
Provide one extra #4 bar reinforcement each side of each opening and two extra #4 bars at 3" min. spacing above each opening.

SECTION B-B
(ALTERNATE B)

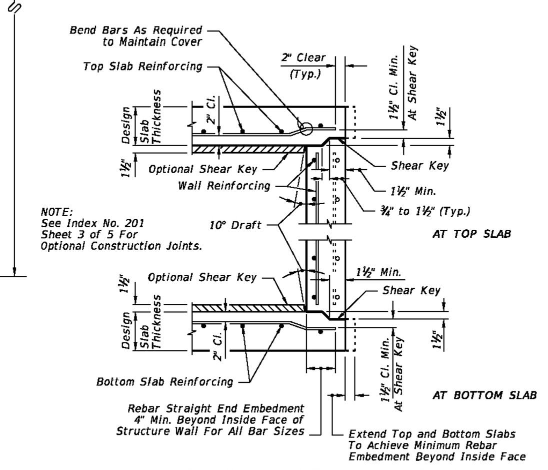

NOTE:
See Index No. 201 Sheet 3 of 5 For Optional Construction Joints.

TYPICAL SLAB TO WALL DETAILS
FOR PRECAST STRUCTURES

LAST REVISION 01/01/10	REVISION	DESCRIPTION:	FDOT 2014 DESIGN STANDARDS	STRUCTURE BOTTOMS TYPE J AND P	INDEX NO. 200	SHEET NO. 1 of 5

ROUND STRUCTURE BOTTOMS (ALTERNATE A) & ROUND RISERS– TABLE 1
Wall Thickness (t_1 & t_2) and Vertical & Horizontal Areas of Reinforcement (A_s)

Type	Structure/Riser Diameter (ft)	Cast-In-Place Items Class II Concrete t_1 Riser (in.)	t_2 Bottom (in.)	A_s (in.²/ft.)	Precast Items Class II Concrete t_1 Riser (in.)	t_2 Bottom (in.)	A_s (in.²/ft.)	ASTM C478 t_1 or t_2 (in.)	A_2 *** (in.²/ft.)
P	3'-6"	6	8	0.20	6	8	0.20	4**	0.105
P	4'-0"	6	8	0.20	6	8	0.20	5**	0.120
J	5'-0"	–	8	0.20	–	8	0.20	6**	0.150
J	6'-0"	–	8	0.20	–	8	0.20	6	0.180
J	7'-0"	–	8	0.20	–	8	0.20	7	0.210
J	8'-0"	–	8	0.20	–	8	0.20	8	0.240
J	10'-0"	–	10	0.40##	–	10	0.40##	10	0.300
J	12'-0"	–	10	0.40##	–	12	0.40##	12	0.360

TABLE 1 NOTES:
##Provide 0.20 eq. in.²/ft. at each face, 12" max. bar spacing.
**Modified minimum wall thickness.
***Min. total circumferential reinforcement for continuous steel hoops:
A_2 = 0.50 sq. in. for riser section height equal or less than 2'-0" (2 hoop min.)
A_2 = 0.75 sq. in. for riser section height more than 2'-0" up to 4'-0" (3 hoop min.)
Areas of reinforcing for precast items are based on Grade 60 reinforcing;
No reduction in the area of reinforcement is allowed for welded wire fabric in Table 1;
Area of vertical reinforcing may be reduced in accordance with ASTM C478.

SQUARE & RECTANGULAR STRUCTURES
(ALTERNATE B) – TABLE 2

Type	Wall Length (ft)	Max. Depth (ft)	Wall Thickness (t_2) CIP (in.)	Precast (in.)
P	≤ 3'-6"	40	6 Riser 8 Bottom	6
J	4'-0"	40	8	6
J	5'-0"	22	–	6
J	6'-0"	15	–	6
J	5'-0" to 9'-0"	40	8	8
J	10'-0"	26	8	8
J	10'-0" to 12'-0"	40	10	9
J	16'-0"	35	–	9
J	16'-0"	40	10	10
J	20'-0"	25	–	9
J	20'-0"	30	10	10

TABLE 2 NOTES:
See Table 8 for Reinforcing Schedule.

GENERAL NOTES

1. Standard structure bottoms 4'-0" diameter and smaller (Alt. A) and 3'-6" square (Alt. B) are designated Type P. Larger standard structure bottoms are designated Type J. Risers are permitted for all structures. Round risers are designated Type A, square risers are designated Type B.
2. Walls of circular structures (Alt. A) constructed in place may be of brick or reinforced concrete. Precast and rectangular structures (Alt. B) shall be constructed of reinforced concrete only.
3. Wall thickness and reinforcement are for either reinforced cast-in-place or precast concrete units except that precast circular units may be furnished with walls in accordance with ASTM C478 (see modified wall thicknesses in Table 1).
4. Top and bottom slab thickness and reinforcement are for precast and cast-in-place construction. All concrete shall be of Class II concrete, except use Class IV concrete when shown in the Plans, for special applications of structures located in extremely aggressive environments. Concrete as specified in ASTM C478 (4000 psi) may be used in lieu of Class II concrete for precast items manufactured in accordance with Specifications Section 449.
5. All reinforcement shown is Grade 60 steel, deformed bar. Equivalent area Grade 40 steel or equivalent area smooth or deformed welded wire reinforcement in accordance with Specification Section 931 may be substituted according to Index No. 201, unless otherwise noted.
6. Alt. A or Alt. B structure bottoms may be used in conjunction with curb inlet tops Types 1, 2, 3, 4, 5, 6, 9, and 10, and any manhole or junction box unless otherwise shown in the plans or other standard drawings. Alt. B structure bottoms may be used in conjunction with curb inlet Types 7 & 8, or any ditch bottom inlet unless otherwise shown in the plans or other standard drawings.
7. Rectangular structures may be rotated as directed by the Engineer in order to facilitate connections between the structure walls and storm sewer pipes.
8. Except when ACI hooks are specifically required, reinforcement in top and bottom slab shall be straight embedment.
9. All reinforcement must have 2" minimum cover except for 3'-6" diameter precast circular units manufactured under ASTM C478, keyed construction otherwise shown. Additional bars used to restrain hole formers for precast structures with grouted pipe connections,may be left flush with the hole surface. Cut or bend reinforcement at pipe openings to maintain cover. Exposed ends of reinforcing at precast pipe openings and grouted joints must be removed to 1" below the concrete surface and sealed with a Type F epoxy in accordance with Specification Section 926. Horizontal steel in rectangular structures shall be lapped a minimum of 30 bar diameters or by standard hooks at corners.
10. The corner fillets shown are necessary for rectangular structures used with circular risers and inlet throats and when used on skew with rectangular risers, inlets and inlet throats. Fillets will be required in the top slab of the Alt. A structure bottoms when used with the Alt. B risers. Each fillet shall be reinforced with two #5 bars.
11. Inlet walls, throats, risers or manhole tops shall be secured to structures as shown on Index No. 201 (Sheet 3 of 5) Optional Construction Joints.
12. Structures with depths over 14' below the mean high water table are to be checked for flotation by the designer of the drainage project.
13. Units larger than specified standards may be substituted at the contractor's option when these units will not cause or increase the severity of utility conflicts. Such larger units shall be furnished at no additional cost to the Department. Larger Alt. A units cannot replace Alt. B units without approval of the Engineer. This note applies to this Index only.
14. For manhole and junction box tops, for frames and covers, and, for supplementary details and notes see Index No. 201.
15. Type J structure bottoms must have a minimum 6'-0" wall height when possible, for maintenance access.

LAST REVISION 07/01/13	REVISION	DESCRIPTION:	FDOT 2014 DESIGN STANDARDS	STRUCTURE BOTTOMS TYPE J AND P	INDEX NO. 200	SHEET NO. 2 of 5

TABLE 3-MINIMUM STRUCTURE SIZES FOR SINGLE PIPE CONNECTION PER SIDE

PIPE SIZE	RECTANGULAR Side Dimension (L) Single Pipe Per Side	Note Number	ROUND Diameter (D) Single Pipe or θ=180°	2 to 4 Pipes θ=90°
18"	3'-6"		3'-6"	4'-0"
24"	3'-6"		3'-6"	5'-0"
30"	3'-6"/4'-0"	2	4'-0"	6'-0"
36"	4'-0"/5'-0"	3	5'-0"	7'-0"
42"	5'-0"		6'-0"	7'-0"
48"	6'-0"		6'-0"	8'-0"
54"	6'-0"		7'-0"	10'-0"
60"	7'-0"		7'-0"	10'-0"
66"	7'-0"/8'-0"	4	8'-0"	12'-0"
72"	8'-0"		8'-0"	12'-0"
78"	9'-0"		10'-0"	12'-0"
84"	9'-0"		12'-0"	N/A

TABLE 3 NOTES:
1. For Round Structures sizes with variable angles between pipes and variable pipe sizes, refer to the FDOT Storm Drain Handbook.
2. For 3'-6" Precast Square Structure Bottoms, 30" Pipes with similar invert elevations are not permitted in adjacent walls. Use 4'-0" Side Dimensions when 30" pipe openings are required on adjacent walls and the difference in flow lines is less than 3'-0".
3. For 4'-0" Precast Square Structure Bottoms, 36" Pipes with similar invert elevations are not permitted in adjacent walls. Use 5'-0" Side Dimensions when 36" pipe openings are required on adjacent walls and the difference in flow lines is less than 3'-0".
4. For 7'-0" Precast Square Structure Bottoms, 66" Pipes with similar invert elevations are not permitted in adjacent walls. Use 8'-0" Side Dimensions when 66" pipe openings are required on adjacent walls and the difference in flow lines is less than 4'-0".

TABLE 4-MINIMUM SIZES FOR MULTIPLE PARALLEL PIPE CONNECTIONS FOR RECTANGULAR STRUCTURE BOTTOMS

PIPE SIZE	PIPE SPACING (S)	MINIMUM WALL LENGTH (L) FOR NUMBER OF PARALLEL PIPES 2	3	4
18"	2'-10"	6'-0"	8'-6"	11'-0"
24"	3'-5"	6'-6"	10'-0"	13'-6"
30"	4'-3"	8'-0"	12'-6"	16'-6"
36"	5'-1'	9'-6"	14'-6"	19'-6"
42"	6'-0"	11'-0"	17'-0"	–
48"	6'-9"	12'-6"	19'-0"	–
54"	7'-8"	14'-0"	–	–
60"	8'-6"	15'-0"	–	–
66"	9'-0"	16'-6"	–	–
72"	10'-0"	18'-0"	–	–
78"	10'-9"	19'-0"	–	–
84"	11'-8"	20'-6"	–	–

TABLE 4 NOTES:
1. Minimum wall lengths based on precast structures, using concrete pipe with maximum skew angles per Table 5.
2. Wall lengths exceeding 20'-0" require special designs.

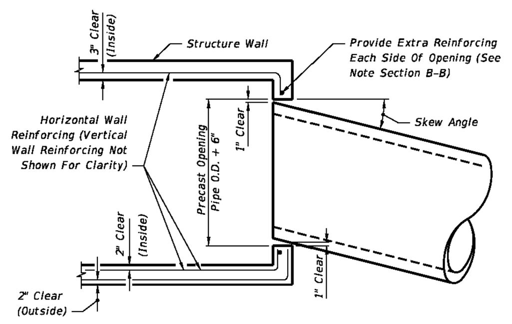

MAXIMUM PIPE SKEW FOR PRECAST ROUND OPENINGS
PLAN VIEW

TABLE 5 - MAXIMUM PIPE SKEW FOR PRECAST ROUND OPENINGS

	WALL THICKNESS	18"	24"	30"	36"	42"	48"	54"	60"	66"	72"	78"	84"
MAXIMUM SKEW ANGLE	8"	19°	17°	16°	16°	15°	14°	14°	13°	13°	13°	12°	12°
	6"	21°	20°	18°	17°	17°	16°	15°	15°	14°	14°	13°	13°

(PIPE SIZE columns 18" to 84")

TABLE 5 NOTES:
These values are based on 2" clearance for precast structures. Larger skews are possible for Cast-In-Place Structures or elliptical pipe openings when approved by the Engineer.

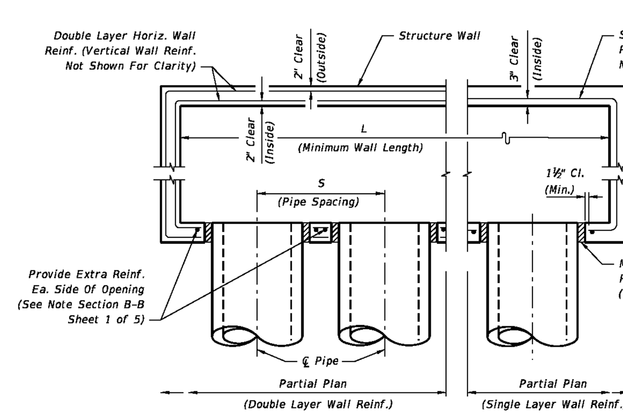

MULTIPLE PARALLEL PIPE CONNECTIONS DETAIL
PLAN VIEW

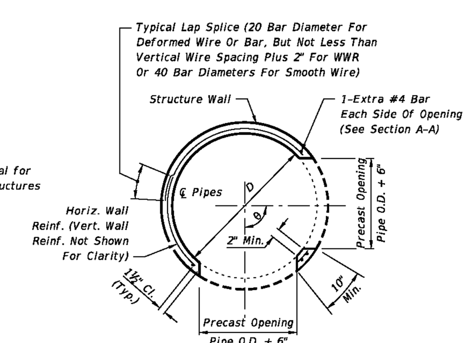

PRECAST ROUND STRUCTURES WITH MULTIPLE PIPE CONNECTIONS

STRUCTURE SIZES FOR PIPE CONNECTIONS

LAST REVISION 07/01/07	REVISION	DESCRIPTION:	FDOT 2014 DESIGN STANDARDS	STRUCTURE BOTTOMS TYPE J AND P	INDEX NO. 200	SHEET NO. 3 of 5

EXAMPLE TABLE OF EQUIVALENT STEEL AREA

SCHEDULE	GRADE 60 REINFORCING BAR: Bar Size & Spacing	Steel Area (in²/ft)	EQUIVALENT GRADE 40 REINFORCING BAR: Bar Size & Spacing	Min. Steel Area (in²/ft)	EQUIVALENT 65 KSI SMOOTH WELDED WIRE REINFORCEMENT: Style Designation	Min. Steel Area (in²/ft)	EQUIVALENT 70 KSI DEFORMED WELDED WIRE REINFORCEMENT: Style Designation	Min. Steel Area (in²/ft)
A	#3 @ 6½" Ctrs. #4 @ 12" Ctrs.	0.20	#3 @ 4½" Ctrs. #4 @ 8" Ctrs. #5 @ 12" Ctrs.	0.30	3"x3"-W4.6xW4.6 4"x4"-W6.2xW6.2 6"x6"-W9.2xW9.2	0.1846	3"x3"-D4.3xD4.3 4"x4"-D5.7xD5.7 6"x6"-D8.6xD8.6	0.1714
B	#3 @ 5½" Ctrs. #4 @ 10" Ctrs.	0.24	#3 @ 3½" Ctrs. #4 @ 6½" Ctrs. #5 @ 10" Ctrs.	0.36	3"x3"-W5.5xW5.5 4"x4"-W7.4xW7.4 6"x6"-W11.1xW11.1	0.2215	3"x3"-D5.1xD5.1 4"x4"-D6.9xD6.9 6"x6"-D10.3xD10.3	0.2057
Special 1	#3 @ 5" Ctrs.. #4 @ 9" Ctrs.	0.267	#3 @ 3" Ctrs. #4 @ 6" Ctrs. #5 @ 9" Ctrs.	0.40	3"x3"-W6.2xW6.2 4"x4"-W8.2xW8.2 6"x6"-W12.3xW12.3	0.2465	3"x3"-D5.7xD5.7 4"x4"-D7.6xD7.6 6"x6"-D11.4xD11.4	0.2289
C	#3 @ 3½" Ctrs. #4 @ 6½" Ctrs. #5 @ 10" Ctrs.	0.37	#4 @ 4" Ctrs. #5 @ 6½" Ctrs. #6 @ 9½" Ctrs.	0.555	3"x3"-W8.5xW8.5 4"x4"-W11.4xW11.4 6"x6"-W17.1xW17.1	0.3415	3"x3"-D7.9xD7.9 4"x4"-D10.6xD10.6 6"x6"-D15.9xD15.9	0.3171
D	#4 @ 4½" Ctrs. #5 @ 7" Ctrs. #6 @ 10" Ctrs.	0.53	#4 @ 3" Ctrs. #5 @ 4½" Ctrs. #6 @ 6½" Ctrs.	0.795	3"x3"-W12.2xW12.2 4"x4"-W16.3xW16.3 6"x6"-W24.5xW24.5	0.4892	3"x3"-D11.4xD11.4 4"x4"-D15.1xD15.1 6"x6"-D22.7xD22.7	0.4543
E	#4 @ 3" Ctrs. #5 @ 5" Ctrs. #6 @ 7" Ctrs.	0.73	#5 @ 3½" Ctrs. #6 @ 4½" Ctrs. #7 @ 6½" Ctrs.	1.095	3"x3"-W16.8xW16.8 4"x4"-W22.5xW22.5 6"x6"-W33.7xW33.7	0.6738	3"x3"-D15.6xD15.6 4"x4"-D20.9xD20.9 6"x6"-D31.3xD31.3	0.6257
F	#5 @ 3½" Ctrs. #6 @ 5" Ctrs. #7 @ 7" Ctrs.	1.06	#6 @ 3" Ctrs. #7 @ 4½" Ctrs. #8 @ 6" Ctrs.	1.59	3"x3"-W24.5xW24.5 4"x4"-W32.6xW32.6 6"x6"-W48.9xW48.9	0.9785	3"x3"-D22.7xD22.7 4"x4"-D30.3xD30.3 6"x6"-D45.4xD45.4	0.9086
Special 2	#5 @ 3" Ctrs. #6 @ 4" Ctrs. #7 @ 5½" Ctrs.	1.24	#7 @ 4" Ctrs. #8 @ 5" Ctrs.	1.86	3"x3"-W28.6xW28.6 4"x4"-W38.2xW38.2 6"x6"-W57.2xW57.2	1.1446	3"x3"-D26.6xD26.6 4"x4"-D35.4xD35.4 6"x6"-D53.1xD53.1	1.0629
G	#6 @ 3½" Ctrs. #7 @ 5" Ctrs.	1.46	#7 @ 3" Ctrs. #8 @ 4" Ctrs.	2.19	3"x3"-W33.7xW33.7 4"x4"-W44.9xW44.9	1.3477	3"x3"-D31.3xD31.3 4"x4"-D41.7xD41.7	1.2514

GENERAL NOTES

1. For square or rectangular precast drainage structures, either deformed or smooth welded wire reinforcement in accordance with Specifcation Section 931:
   a) Width and length of the unit is four times the spacing of the cross wires.
   b) Wire reinforcement shall be continuous around the box, and lapped in accordance with Option 1 or 3 as shown in the Wall Reinforcing Splice Details.
2. Horizontal steel in the walls of rectangular structures shall be lap spliced in accordance with Option 1, 2 or 3 as shown in the Wall Reinforcing Splice Details.
3. Welding of splices and laps is permitted. The requirements and restrictions placed on welding in AASHTO M259 shall apply.
4. Rebar straight end embedment of peripheral reinforcement may be used in lieu of ACI standard hooks for top and bottom slabs except when hooks are specifically called for in the plans or standard drawings.
5. Concrete as specified in ASTM C478, (4000 psi) may be used in lieu of Class II concrete in precast items manufactured in plants which meet the requirements of Section 449 of the Specifications.
6. Precast opening for pipe shall be the pipe OD plus 6" (± 2" tolerance). Mortar used to seal the pipe into the opening will be of such a mix that shrinkage will not cause leakage into or out of the structure. Dry-pack mortar may be used in lieu of brick and mortar construction to seal openings less than 2½" wide.
7. For pay item purposes, the height used to determine if a drainage structure is greater than 10 feet shall be computed using:
   a) the elevation of the top of the manhole lid,
   b) the grate elevation or the theoretical gutter grade elevation of an inlet, or
   c) the outside top elevation of a junction box less the flow line elevation of the lowest pipe or to top of sump floor.

NOTES FOR PRECAST OPTIONS & EQUIVALENT REINFORCEMENT SUBSTITUTION

1. Details for optional precast inlet construction up to depths of 15' are shown on the inlet indexes.
2. When precast units are used in conjunction with Alt. "B" Structure Bottoms, Index No. 200, the interior dimensions of an Alt. "B" Bottom can be adjusted to reflect these inlet interior dimensions.
3. Concrete which meets the requirements of ASTM C478 or Class IV must be used for precast structures constructed with 6" wall or slab thickness.
4. Reinforcement can be either deformed bar reinforcement or welded wire reinforcement. Bar reinforcement other than 60 ksi may be used, however only two grades are recognized; Grade 40 and Grade 60. Smooth welded wire reinforcement, will be recognized as having a design strength of 65 ksi and deformed welded wire reinforcement will be recognized as having a design strength of 70 ksi. The area of reinforcement required may be adjusted in accordance with the Equivalent Steel Area Table provided. For bars and spacings not given, the steel area required can be determined by the following equations:

Grade 40 Steel Area = $A_s40 = \frac{60}{40} \times A_s60$

Smooth Welded Wire Reinforcement Steel Area = $A_s65 = \frac{60}{65} \times A_s60$

Deformed Welded Wire Reinforcement Steel Area = $A_s70 = \frac{60}{70} \times A_s60$

continued...
When a reduced area of reinforcement is provided, any maximum bar spacing shown must also be reduced as determined by the following equations, unless otherwise shown:

Max. Grade 40 Bar Spacing = Grade 60 Bar Spacing
Max. Smooth Welded Wire Spacing = Grade 60 Bar Spacing x 0.86
Max. Deformed Welded Wire Spacing = Grade 60 Bar Spacing x 0.74

When an increased area of reinforcing is provided, then the maximum bar spacing may be increased by the squared ratio of increased steel area, but not to exceed 12":

$$\text{Max. Bar Spacing Provided} \leq \text{Max. Bar Spacing Required} \times \left(\frac{\text{Steel Area Provided}}{\text{Min. Steel Area Required}}\right)^2$$

In no case will reinforcement with wires smaller than W3.1 or D3.1, or spacings greater than 8" be permitted. Bar reinforcement shall show the minimum yield designation grade mark or either the number 60 or one (1) grade mark line to be acceptable at the higher value. Maximum bar spacing shall not be greater than two (2) times the slab thickness with a maximum spacing of 12" or three (3) times the wall thickness, with a maximum spacing of 18" for vertical bars and 12" for horizontal bars. Wires smaller than W3.1 or D3.1 are permitted in the walls of ASTM C 478 round structure bottoms and round risers.

LAST REVISION 07/01/13	REVISION	DESCRIPTION:	FDOT 2015 DESIGN STANDARDS	SUPPLEMENTARY DETAILS FOR MANHOLES & INLETS	INDEX NO. 201	SHEET NO. 4 of 5

WALL DESIGNS - RECTANGULAR STRUCTURES (TABLE 8)

VERTICAL REINFORCING WALL DEPTH	SCHEDULE		HORIZONTAL REINFORCING WALL DEPTH	SCHEDULE		WALL THICKNESS
SIZE: 3'-6' & RISERS						
≥1.17' – 40'	A12		≥1.17' < 10'	B10		6"/8"
			10' < 18'	B5.5		6"/8"
			18' < 29'	C6.5		6"/8"
			29' – 40'	C3.5		6"/8"
SIZE: 4'-0"						
≥1.17' – 40'	A12		≥1.17' < 6'	B10		6"/8"
			6' < 10'	B5.5		6"/8"
			10' < 20'	C6.5		6"/8"
			20' < 28'	C3.5		6"/8"
			28' – 40'	D4.5		6"/8"
SIZE: 5'-0"						
≥1.17' – 40'	A12		≥1.17' < 5'	B5.5		6"/8"
			5' < 9'	C6.5		6"/8"
			9' < 15'	C3.5		6"/8"
			15' < 22'	D4.5		6"/8"
			22' – 40'	E3		8"
SIZE: 6'-0"						
≥1.17' < 26'	A12		≥1.17' < 9'	C3.5		6"/8"
			9' < 15'	D4.5		6"/8"
			15' < 26'	E3		8"
	Inside	Outside		Inside	Outside	
26' – 40'	A12	A12	26' – 40'	D7	D7	8"
SIZE: 7'-0"						
	Inside	Outside		Inside	Outside	
≥1.17' < 25'	A12	A12	≥1.17' < 7'	B10	B10	8"
26' – 40'	B10	B10	7' < 10'	B5.5	B5.5	8"
			10' < 20'	C6.5	C6.5	8"
			20' < 30'	D7	D7	8"
			30' – 40'	E5	E5	8"
SIZE: 8'-0"						
	Inside	Outside		Inside	Outside	
≥1.17' < 20'	A12	A12	≥1.17' < 6'	B5.5	B5.5	8"
20' – 40'	C6.5	C6.5	6' < 13'	C6.5	C6.5	8"
			13' < 22'	D7	D7	8"
			22' < 31'	E5	E5	8"
			31' – 40'	F5	F5	8"
SIZE: 9'-0"						
	Inside	Outside		Inside	Outside	
≥1.17' < 12'	A12	A12	≥1.17' < 8'	C6.5	C6.5	8"
12' < 28'	C6.5	C6.5	8' < 15'	D7	D7	8"
28' – 40'	D7	D7	15' < 23'	E5	E5	8"
			23' – 40'	F5	F5	8"
SIZE: 10'-0"						
	Inside	Outside		Inside	Outside	
≥1.17' < 10'	B10	B10	≥1.17' < 10'	D7	D7	8"
10' < 21'	C6.5	C6.5	10' < 17'	E5	E5	8"
21' < 26'	D7	D7	17' < 26'	F5	F5	8"
26' – 40'	C6.5	C6.5	26' – 40'	F5	F5	10"

VERTICAL REINFORCING WALL DEPTH	SCHEDULE		HORIZONTAL REINFORCING WALL DEPTH	SCHEDULE		WALL THICKNESS
SIZE: 10'-0" (Precast Only)						
	Inside	Outside		Inside	Outside	
26' – 40'	D7	D7	26' – 40'	F5	F5	9"
SIZE: 12'-0"						
	Inside	Outside		Inside	Outside	
≥1.17' < 14'	B10	B10	≥1.17' < 10'	C6.5	C6.5	10"
14' < 25'	C6.5	C6.5	10' < 17'	D7	D7	10"
25' – 40'	D7	D7	17' < 24'	E5	E5	10"
			24' – 40'	F5	F5	10"
SIZE: 12'-0" (Precast Only)						
	Inside	Outside		Inside	Outside	
≥1.17' < 12'	B10	B10	≥1.17' < 10'	D7	D7	9"
12' < 24'	C6.5	C6.5	10' < 17'	D4.5	D4.5	9"
24' – 40'	D7	D7	17' < 23'	E5	E5	9"
			23' < 32'	F5	F5	9"
			32' – 40'	G5	G5	9"
SIZE: 16'-0"						
	Inside	Outside		Inside	Outside	
≥1.17' < 11'	C6.5	C6.5	≥1.17' < 13'	D7	D7	10"
11' < 20'	D7	D7	13' < 20'	E5	E5	10"
20' < 28'	E5	E5	20' < 28'	F5	F5	10"
28' – 40'	F5	F5	28' – 40'	G5	G5	10"
SIZE: 16'-0" (Precast Only)						
	Inside	Outside		Inside	Outside	
≥1.17' < 10'	C6.5	C6.5	≥1.17' < 9'	D7	D7	9"
10' < 18'	D7	D7	9' < 13'	D4.5	D4.5	9"
18' < 25'	E5	E5	13' < 19'	E5	E5	9"
25' – 35'	F5	F5	19' < 27'	F5	F5	9"
			27' – 35'	G5	G5	9"
SIZE: 20'-0"						
	Inside	Outside		Inside	Outside	
≥1.17' < 10'	C6.5	C6.5	≥1.17' < 8'	D7	D7	10"
10' < 17'	D7	D7	8' < 12'	E5	E5	10"
17' – 30'	E5	E5	12' < 20'	F5	F5	10"
			20' – 30'	G5	G5	10"
SIZE: 20'-0" (Precast Only)						
	Inside	Outside		Inside	Outside	
≥1.17' < 8'	C6.5	C6.5	≥1.17' < 8'	D4.5	D4.5	9"
8' < 13'	D7	D7	8' < 12'	E5	E5	9"
13' – 25'	E5	E5	12' < 19'	F5	F5	9"
			19' – 25'	G5	G5	9"

REINFORCING SCHEDULE

SCHEDULE	GRADE 60 BARS OR 65 KSI & 70 KSI WELDED WIRE REINFORCING: GRADE 60 AREA (in.²/ft.)	MAXIMUM SPACING: GR 60 BARS (in.)	WWR EQUIV. AREA*: 65 KSI (in.)	70 KSI (in.)
A12	0.20	12	8	8
A6	0.20	6	5	4½
B10	0.24	10	8	7½
B5.5	0.24	5½	5	4
C6.5	0.37	6½	6	5
C3.5	0.37	3½	3	2½
D7	0.53	7	6	5
D4.5	0.53	4½	4	3½
E5	0.73	5	4	4
E3	0.73	3	3	3
F5	1.06	5	4	4
F3.5	1.06	3½	3	3
G5	1.45	5	4	4
G.3.5	1.45	3½	3	3
H4	1.75	4	3	3

*Equivalent Area Welded Wire Reinforcing may be substituted in accordance with Index No. 201, Sheet 4.

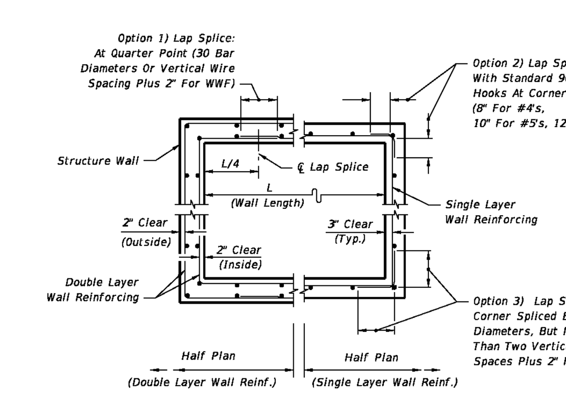

WALL REINFORCING SPLICE DETAILS
(ALTERNATE B)

LAST REVISION 01/01/12	REVISION	DESCRIPTION:	FDOT 2014 DESIGN STANDARDS	STRUCTURE BOTTOMS TYPE J AND P	INDEX NO. 200	SHEET NO. 5 of 5

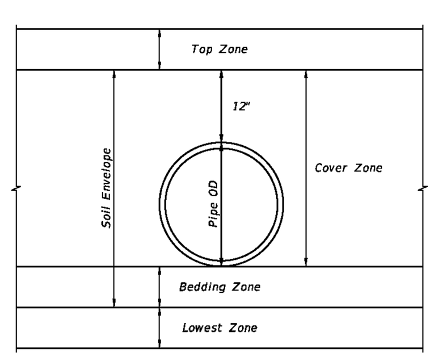

Pipe Backfill
For Additional Information On Pipe Backfill Requirements See Specification Section 125.

1 STORM PIPE BEDDING NTS

LAST REVISION 07/01/13	REVISION	DESCRIPTION:	FDOT 2015 DESIGN STANDARDS	PIPE BACKFILL	INDEX NO. 205	SHEET NO. 1 of 1

2 STRUCTURE BOTTOM (TYPE J, ALT A FOR USE WITH TYPE 9 INLET NTS

GRIMAIL CRAWFORD, INC.
ENGINEERING · PLANNING · GIS
3650 MANSELL ROAD
SUITE 495
ALPHARETTA, GA 30022
770.437.8850 844.833.6661 FAX
www.gc-inc.com

PLANS FOR:
PANDA EXPRESS
CYPRESS CREEK TOWN CENTER
GRAND CYPRESS DRIVE
WESLEY CHAPEL, FLORIDA

CLIENT:
PANDA RESTAURANT GROUP, INC.
1683 WALNUT GROVE AVE
ROSEMEAD, CA 91770
PHONE: (626) 372-8119

REVISION HISTORY

--/--/----	--/--/----
--/--/----	--/--/----
--/--/----	--/--/----
--/--/----	--/--/----
--/--/----	--/--/----
--/--/----	--/--/----
--/--/----	--/--/----

THE CIVIL ENGINEER REGULARLY UPDATES ELECTRONIC FILES DURING THE DEVELOPMENT OF A PROJECT. AS A RESULT, THE DATA INCLUDED IN ANY CAD FILE OR DRAWING PRIOR TO ITS FINAL RELEASE DOES NOT NECESSARILY REFLECT THE COMPLETE SCOPE OR CONTENT AS DEFINED IN THE CONTRACT. THE CONTENTS IN THESE FILES MAY THEREFORE BE PRELIMINARY, INCOMPLETE WORK IN PROGRESS, AND SUBJECT TO CHANGE. FURTHERMORE, THE INFORMATION CONTAINED HEREIN IS THE EXCLUSIVE PROPERTY OF THE CIVIL ENGINEER. THE ORIGINAL IDEAS REPRESENTED HERE BY THIS INFORMATION SHALL NOT BE USED, ALTERED, OR REPRODUCED IN ANY MANNER WITHOUT THE EXPRESSED WRITTEN CONSENT OF THE CIVIL ENGINEER. THESE PLANS ARE SUBJECT TO FEDERAL COPYRIGHT LAWS; ANY USE OF SAME WITHOUT EXPRESSED WRITTEN PERMISSION OF THE CIVIL ENGINEER IS PROHIBITED.

GCI PROJ #	140283
DWG NAME	140283 C04.DWG
ISSUE DATE	10/07/15
GCI PROJ MGR	JMP

UTILITY DETAILS IV

C04.5
SHEET NUMBER

ISSUED FOR PERMITTING

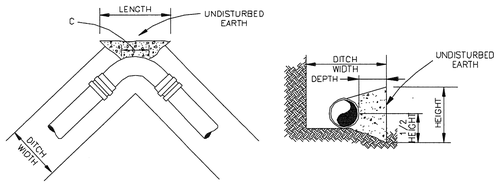

TABLE FOR CONCRETE BLOCKING
(250 PSI TEST PRESSURE)

MINIMUM DIMENSIONS OF BLOCKING

FITTING	SIZE	DEPTH (FT.)	LENGTH (FT.)	"C" (IN.)	HEIGHT (FT.)	VOLUME (C.Y.)	THRUST (LB.)
11 1/4° BEND	6"	1.0	2.0	6	1.0	0.04	1,385
11 1/4° BEND	8"	1.0	2.0	7	1.0	0.05	2,465
11 1/4° BEND	10"	1.0	2.0	9	1.0	0.07	3,850
11 1/4° BEND	12"	1.0	2.5	11	1.5	0.12	5,550
11 1/4° BEND	16"	2.0	2.5	12	2.1	0.26	9,860
11 1/4° BEND	20"	2.0	3.5	15	2.5	0.48	15,406
11 1/4° BEND	24"	2.0	4.0	18	3.0	0.70	22,185
22 1/2° BEND	6"	1.0	2.0	6	1.0	0.04	2,760
22 1/2° BEND	8"	1.0	2.0	7	1.5	0.06	4,905
22 1/2° BEND	10"	1.0	2.0	9	2.0	0.10	7,665
22 1/2° BEND	12"	1.0	3.0	11	2.0	0.16	11,040
22 1/2° BEND	16"	2.0	3.5	12	3.0	0.45	19,625
22 1/2° BEND	20"	2.0	4.0	15	4.0	0.74	30,665
22 1/2° BEND	24"	3.0	5.0	18	4.5	1.47	44,160
45° BEND	6"	1.0	2.0	6	1.5	0.06	5,415
45° BEND	8"	1.0	2.5	7	2.0	0.10	9,625
45° BEND	10"	2.0	3.5	9	2.5	0.31	15,040
45° BEND	12"	2.0	3.5	11	3.0	0.41	21,655
45° BEND	16"	3.0	5.0	12	4.0	1.45	38,495
45° BEND	20"	4.0	6.0	15	5.0	2.05	60,145
45° BEND	24"	4.0	7.5	18	6.5	3.35	91,610
90° BEND	6"	1.0	2.5	12	2.0	0.13	10,005
90° BEND	8"	2.0	3.0	14	3.0	0.38	17,785
90° BEND	10"	2.5	4.5	18	3.0	0.74	27,785
90° BEND	12"	3.0	5.0	20	4.0	1.24	40,000
90° BEND	16"	4.0	6.5	26	5.5	2.91	71,125
90° BEND	20"	4.0	8.0	32	7.0	4.68	111,135
90° BEND	24"	5.0	10.0	40	8.0	8.50	160,035

NOTES:

1. SOIL BEARING STRENGTH OF 2000 PSI IS ASSUMED IN THE CALCULATIONS ABOVE. ENGINEER SHALL VERIFY.
2. COVER GLANDS AND BOLTS WITH POLYETHYLENE BEFORE PLACING CONCRETE.
3. ALLOW CONCRETE TO SET UP A MINIMUM OF 6 HOURS BEFORE PLACING BACKFILL.
4. CONCRETE SHALL BE 3000 PSI, CLASS A.
5. ALL IRON FITTINGS SHALL BE BLOCKED AND SUPPORTED AS SHOWN ABOVE.
6. VERTICAL BENDS WITH AN UPWARD THRUST SHALL BE RESTRAINED AS SHOWN IN STANDARD W715.
7. VERTICAL BENDS WITH A DOWNWARD THRUST SHALL BE RESTRAINED AS SHOWN IN STANDARD W716.

CONCRETE BLOCKING FOR BENDS

CONCRETE BLOCKING DETAIL
CONSTRUCTION STANDARD

DATE: FEB. '03
APPROVED:

STANDARD NO. W713

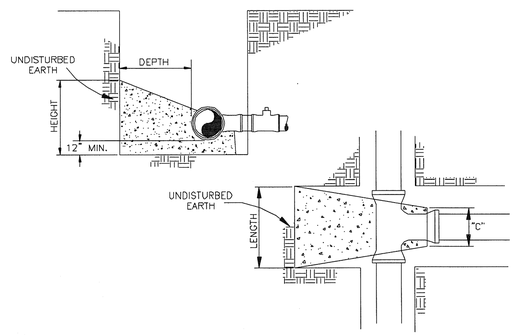

TABLE FOR CONCRETE BLOCKING
(250 PSI TEST PRESSURE)

MINIMUM DIMENSIONS OF BLOCKING

SIZE	DEPTH (FT.)	LENGTH (FT.)	"C" (IN.)	HEIGHT (FT.)	VOLUME (C.Y.)	THRUST (LB.)
6"	1.0	2.5	12	1.5	0.10	7,070
8"	1.7	3.25	14	2.0	0.27	12,565
10"	2.0	4.0	18	2.5	0.50	19,635
12"	2.5	4.5	20	3.25	0.91	28,275
16"	3.0	5.0	26	5.0	1.77	50,265
20"	4.0	7.0	32	5.75	3.69	78,540
24"	6.0	9.0	40	6.5	7.94	113,100

NOTES:

1. SOIL BEARING STRENGTH OF 2000 PSI IS ASSUMED IN THE CALCULATIONS ABOVE. ENGINEER SHALL VERIFY.
2. COVER GLANDS AND BOLTS WITH POLYETHYLENE BEFORE PLACING CONCRETE.
3. ALLOW CONCRETE TO SET UP A MINIMUM OF 6 HOURS BEFORE PLACING BACKFILL.
4. CONCRETE SHALL BE 3000 PSI, CLASS A.
5. ALL IRON FITTINGS SHALL BE BLOCKED AND SUPPORTED AS SHOWN ABOVE.

CONCRETE BLOCKING FOR TEES AND PLUGS

CONCRETE BLOCKING DETAIL
CONSTRUCTION STANDARD

DATE: FEB. '03
APPROVED:

STANDARD NO. W714

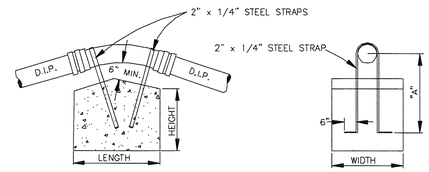

TABLE FOR CONCRETE BLOCKING
(250 PSI TEST PRESSURE)

MINIMUM DIMENSIONS OF BLOCKING

FITTING	SIZE	HEIGHT (FT.)	LENGTH (FT.)	WIDTH (FT.)	VOLUME (C.Y.)	"A" (IN.)	LENGTH OF STRAP (IN.)
11 1/4° BEND	6"	2.0	2.0	2.5	0.37	24	69.5
11 1/4° BEND	8"	3.0	2.2	2.5	0.61	24	72.5
11 1/4° BEND	10"	3.0	3.0	3.0	1.00	26	80.0
11 1/4° BEND	12"	3.0	4.0	3.0	1.33	30	91.0
11 1/4° BEND	16"	3.0	5.0	4.5	2.50	30	97.0
11 1/4° BEND	20"	3.3	6.0	5.0	3.67	36	115.0
11 1/4° BEND	24"	4.0	6.5	5.5	5.30	36	122.0
22 1/2° BEND	6"	2.5	3.0	2.5	0.69	24	69.5
22 1/2° BEND	8"	3.1	3.5	3.0	1.21	24	72.5
22 1/2° BEND	10"	3.2	4.0	4.0	1.90	26	80.0
22 1/2° BEND	12"	3.5	5.0	4.5	2.92	30	91.0
22 1/2° BEND	16"	4.7	5.5	5.0	4.79	36	109.0
22 1/2° BEND	20"	6.0	6.0	5.7	7.60	45	133.0
22 1/2° BEND	24"	8.0	5.7	6.5	10.98	60	170.0

NOTES:

1. COVER GLANDS AND BOLTS WITH POLYETHYLENE BEFORE PLACING CONCRETE.
2. ALLOW CONCRETE TO SET UP A MINIMUM OF 6 HOURS BEFORE PLACING BACKFILL.
3. CONCRETE SHALL BE 3000 PSI, CLASS A.
4. ALL IRON FITTINGS SHALL BE BLOCKED AND SUPPORTED AS SHOWN ABOVE.

CONCRETE BLOCKING-VERTICAL BENDS-UPWARD THRUST

CONCRETE BLOCKING DETAIL
CONSTRUCTION STANDARD

DATE: FEB. '03
APPROVED:

STANDARD NO. W715

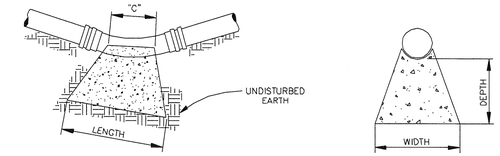

TABLE FOR CONCRETE BLOCKING
(250 PSI TEST PRESSURE)

MINIMUM DIMENSIONS OF BLOCKING

FITTING	SIZE	DEPTH (FT.)	LENGTH (FT.)	"C" (IN.)	WIDTH (FT.)	VOLUME (C.Y.)	THRUST (LB.)
11 1/4° BEND	6"	1.0	2.0	6	1.0	0.04	1,385
11 1/4° BEND	8"	1.0	2.0	7	1.0	0.05	2,465
11 1/4° BEND	10"	1.0	2.0	9	1.0	0.07	3,850
11 1/4° BEND	12"	1.0	2.5	11	1.5	0.12	5,550
11 1/4° BEND	16"	2.0	2.5	12	2.1	0.26	9,860
11 1/4° BEND	20"	2.0	3.5	15	2.5	0.48	15,406
11 1/4° BEND	24"	2.0	4.0	18	3.0	0.70	22,185
22 1/2° BEND	6"	1.0	2.0	6	1.0	0.04	2,760
22 1/2° BEND	8"	1.0	2.0	7	1.5	0.06	4,905
22 1/2° BEND	10"	1.0	2.0	9	2.0	0.10	7,665
22 1/2° BEND	12"	1.0	3.0	11	2.0	0.16	11,040
22 1/2° BEND	16"	2.0	3.5	12	3.0	0.45	19,625
22 1/2° BEND	20"	2.0	4.0	15	4.0	0.74	30,665
22 1/2° BEND	24"	3.0	5.0	18	4.5	1.47	44,160
45° BEND	6"	1.0	2.0	6	1.5	0.06	5,415
45° BEND	8"	1.0	2.5	7	2.0	0.10	9,625
45° BEND	10"	2.0	3.5	9	2.5	0.31	15,040
45° BEND	12"	2.0	3.5	11	3.0	0.41	21,655
45° BEND	16"	3.0	5.0	12	4.0	1.45	38,495
45° BEND	20"	4.0	6.0	15	5.0	2.05	60,145
45° BEND	24"	4.0	7.5	18	6.5	3.35	91,610
90° BEND	6"	1.0	2.5	12	2.0	0.13	10,005
90° BEND	8"	2.0	3.0	14	3.0	0.38	17,785
90° BEND	10"	2.5	4.5	18	3.0	0.74	27,785
90° BEND	12"	3.0	5.0	20	4.0	1.24	40,000
90° BEND	16"	4.0	6.5	26	5.5	2.91	71,125
90° BEND	20"	4.0	8.0	32	7.0	4.68	111,135
90° BEND	24"	5.0	10.0	40	8.0	8.50	160,035

NOTES:

1. SOIL BEARING STRENGTH OF 2000 PSI IS ASSUMED IN THE CALCULATIONS ABOVE. ENGINEER SHALL VERIFY.
2. COVER GLANDS AND BOLTS WITH POLYETHYLENE BEFORE PLACING CONCRETE.
3. ALLOW CONCRETE TO SET UP A MINIMUM OF 6 HOURS BEFORE PLACING BACKFILL.
4. CONCRETE SHALL BE 3000 PSI, CLASS A.
5. ALL IRON FITTINGS SHALL BE BLOCKED AND SUPPORTED AS SHOWN ABOVE.

CONCRETE BLOCKING-VERTICAL BENDS-DOWNWARD THRUST

CONCRETE BLOCKING DETAIL
CONSTRUCTION STANDARD

DATE: FEB. '03
APPROVED:

STANDARD NO. W716

1 THRUST BLOCKING NTS

GRIMAIL CRAWFORD, INC.
ENGINEERING · PLANNING · GIS
3650 MANSELL ROAD
SUITE 495
ALPHARETTA, GA 30022
770.437.8850 844.833.6441 FAX
www.gc-inc.com

PANDA EXPRESS
CYPRESS CREEK TOWN CENTER
GRAND CYPRESS DRIVE
WESLEY CHAPEL, FLORIDA

PLANS FOR:

CLIENT:
PANDA RESTAURANT GROUP, INC.
1683 WALNUT GROVE AVE
ROSEMEAD, CA 91770
PHONE: (626) 372-8119

REVISION HISTORY

--/--/----	--/--/----
--/--/----	--/--/----
--/--/----	--/--/----
--/--/----	--/--/----
--/--/----	--/--/----
--/--/----	--/--/----
--/--/----	--/--/----

THE CIVIL ENGINEER REGULARLY UPDATES ELECTRONIC FILES DURING THE DEVELOPMENT OF A PROJECT. AS A RESULT, THE DATA INCLUDED IN ANY CAD FILE OR DRAWING PRIOR TO ITS FINAL RELEASE DOES NOT NECESSARILY REFLECT THE COMPLETE SCOPE OR CONTENT AS DEFINED IN THE CONTRACT. THE CONTENTS IN THESE FILES MAY THEREFORE BE PRELIMINARY, INCOMPLETE WORK IN PROGRESS, AND SUBJECT TO CHANGE. FURTHERMORE, THE INFORMATION CONTAINED HEREIN IS THE EXCLUSIVE PROPERTY OF THE CIVIL ENGINEER. THE ORIGINAL IDEAS REPRESENTED HERE BY THIS INFORMATION SHALL NOT BE USED, ALTERED, OR REPRODUCED IN ANY MANNER WITHOUT THE EXPRESSED WRITTEN CONSENT OF THE CIVIL ENGINEER. THESE PLANS ARE SUBJECT TO FEDERAL COPYRIGHT LAWS. ANY USE OF SAME WITHOUT EXPRESSED WRITTEN PERMISSION OF THE CIVIL ENGINEER IS PROHIBITED.

GCI PROJ #	140283
DWG NAME	140283 C04.DWG
ISSUE DATE	10/07/15
GCI PROJ MGR	JHP

UTILITY DETAILS V

C04.6
SHEET NUMBER

ISSUED FOR PERMITTING

STORM PROFILE A2.1 - A2

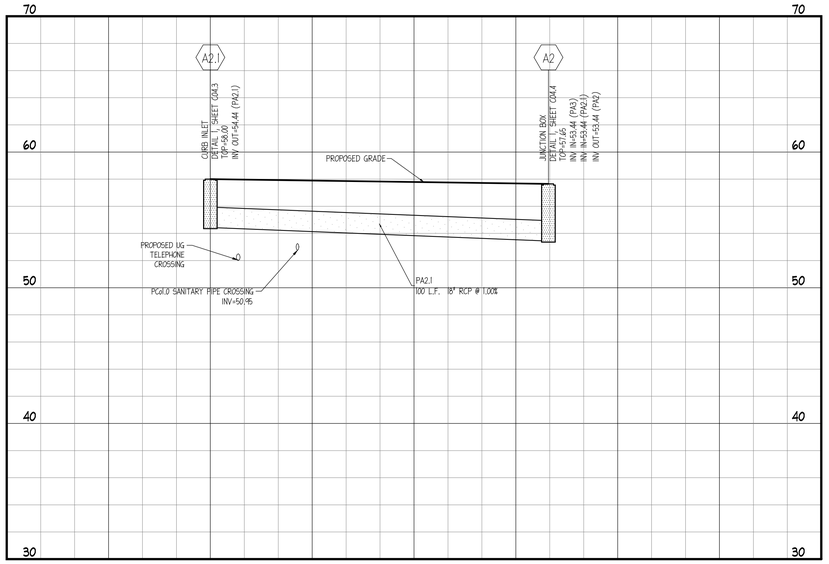

HORIZONTAL SCALE: 1"=20'
VERTICAL SCALE: 1"=5'

STORM STRUCTURE TABLE				
STRUCTURE NAME	STRUCTURE TYPE	RIM ELEVATION	INVERT IN	INVERT OUT
A1	CURB INLET DETAIL 1, SHEET C04.3	56.60	53.10 (PA1.1) 53.10 (PA2)	53.10 (PA1)
A1.1	CURB INLET DETAIL 1, SHEET C04.3	57.35		53.81 (PA1.1)
A2	JUNCTION BOX DETAIL 1, SHEET C04.4	57.65	53.44 (PA3) 53.44 (PA2.1)	53.44 (PA2)
A2.1	CURB INLET DETAIL 1, SHEET C04.3	58.00		54.44 (PA2.1)
A3	GRATE INLET DETAIL 2, SHEET C04.3	57.90		53.96 (PA3)
EX1	EXISTING CATCH BASIN	58.00	52.82 (PA1)	

STORM PIPE TABLE				
NAME	SIZE	LENGTH	SLOPE	MATERIAL
PA1	18"	28'	1.00%	RCP
PA1.1	15"	142'	0.50%	RCP
PA2	18"	34'	1.00%	RCP
PA2.1	18"	100'	1.00%	RCP
PA3	18"	52'	1.00%	RCP

PROFILE NOTES

1. CONTROLLED BACK FILL TO BE PLACED IN 6" LOOSE LIFT AND COMPACTED TO 100% ASTM D698 PRIOR TO STORM AND SANITARY SEWER CONSTRUCTION, BACK FILL SHALL BE PLACED TO A MINIMUM OF ±2' ABOVE THE CROWN ELEVATION OF THE PIPES.
2. STORM DRAIN AND SANITARY SEWER LENGTHS ARE MEASURED FROM CENTER LINE OF STRUCTURE TO CENTERLINE OF STRUCTURE OR FACE OF HEADWALL.
3. ALL PIPE LENGTHS SHOWN ARE ROUNDED TO THE NEAREST FOOT.
4. ALL STORM DRAIN PIPING SHALL BE TRENCHED, BEDDED AND BACK FILLED ACCORDING WITH **DETAIL 1, ON SHEET C04.5** UNLESS SPECIFICALLY NOTED OTHERWISE.
5. ALL SANITARY SEWER PIPING SHALL BE TRENCHED, BEDDED AND BACK FILLED ACCORDING WITH **DETAIL 4, ON SHEET C04.2** UNLESS SPECIFICALLY NOTED OTHERWISE.
6. UNFORESEEN SUBSURFACE CONDITIONS SHALL BE BROUGHT TO THE OWNER'S AND ENGINEER'S ATTENTION IMMEDIATELY IMPLEMENTATION OF CORRECTIVE BEDDING MEASURES WITHOUT THE OWNER'S APPROVAL SHALL BE AT THE CONTRACTOR'S OWN RISK AND AT NO ADDITIONAL COMPENSATION.
7. EXISTING GRADES SHOWN ARE APPROXIMATE AND DO NOT REFLECT TOP SOIL REMOVAL, CLEARING, AND GRUBBING OPERATIONS. THE CONTRACTOR SHALL ASCERTAIN FOR HIMSELF THE EXTENT OF DISTURBANCE FOR THESE ACTIVITIES.
8. THE CONTRACTOR SHALL REFERENCE THE GEOTECHNICAL REPORT PREPARED FOR THE OWNER FOR SUBSURFACE CONDITIONS. THE GEOTECHNICAL REPORT IS NOT A PART OF THE CONTRACT DOCUMENTS.
9. EXCAVATIONS FOR STRUCTURES SHALL BE TAKEN AS A TRENCHING EXCAVATION WITHOUT FURTHER COMPENSATION.
10. SEE SHEET C01.1 FOR GENERAL NOTES.

STORM PROFILE A3 - A1

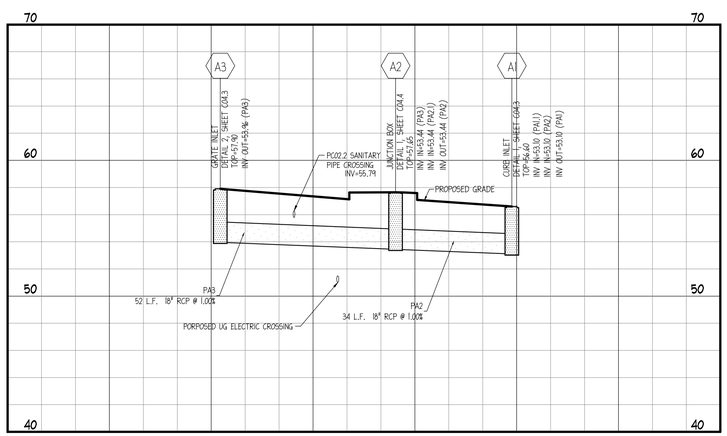

HORIZONTAL SCALE: 1"=20'
VERTICAL SCALE: 1"=5'

STORM PROFILE A1.1 - A1

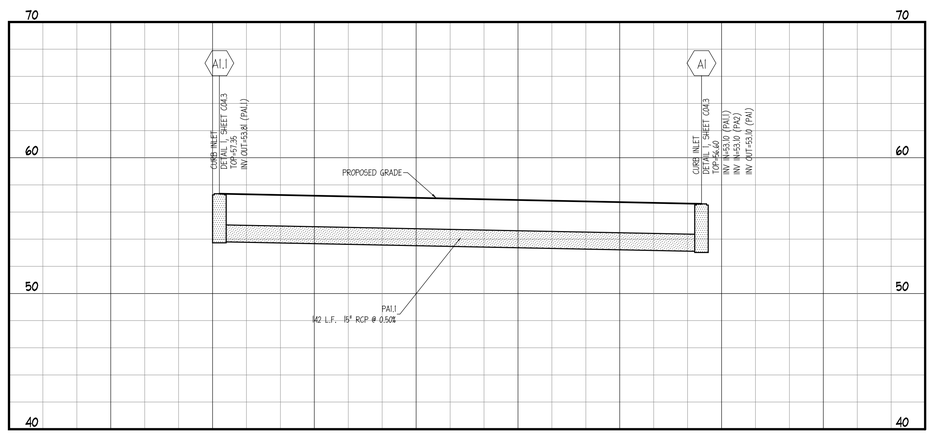

HORIZONTAL SCALE: 1"=20'
VERTICAL SCALE: 1"=5'

GRIMAIL CRAWFORD, INC.
ENGINEERING · PLANNING · GIS
3650 MANSELL ROAD
SUITE 495
ALPHARETTA, GA 30022
770.457.8850 844.833.6661 FAX
www.gc-inc.com

PANDA EXPRESS
CYPRESS CREEK TOWN CENTER
GRAND CYPRESS DRIVE
WESLEY CHAPEL, FLORIDA

PLANS FOR:

CLIENT:
PANDA RESTAURANT GROUP, INC.
1683 WALNUT GROVE AVE
ROSEMEAD, CA 91770
PHONE: (626) 372-8119

REVISION HISTORY

--/--/----	--/--/----
--/--/----	--/--/----
--/--/----	--/--/----
--/--/----	--/--/----
--/--/----	--/--/----
--/--/----	--/--/----
--/--/----	--/--/----

THE CIVIL ENGINEER REGULARLY UPDATES ELECTRONIC FILES DURING THE DEVELOPMENT OF A PROJECT. AS A RESULT, THE DATA INCLUDED IN ANY CAD FILE OR DRAWING PRIOR TO ITS FINAL RELEASE DOES NOT NECESSARILY REFLECT THE COMPLETE SCOPE OR CONTENT AS DEFINED IN THE CONTRACT. THE CONTENTS IN THESE FILES MAY THEREFORE BE PRELIMINARY, INCOMPLETE WORK IN PROGRESS, AND SUBJECT TO CHANGE. FURTHERMORE, THE INFORMATION CONTAINED HEREIN IS THE EXCLUSIVE PROPERTY OF THE CIVIL ENGINEER. THE ORIGINAL IDEAS REPRESENTED HERE BY THIS INFORMATION SHALL NOT BE USED, ALTERED, OR REPRODUCED IN ANY MANNER WITHOUT THE EXPRESSED WRITTEN CONSENT OF THE CIVIL ENGINEER. THESE PLANS ARE SUBJECT TO FEDERAL COPYRIGHT LAWS. ANY USE OF SAME WITHOUT EXPRESSED WRITTEN PERMISSION OF THE CIVIL ENGINEER IS PROHIBITED.

GCI PROJ #	140283
DWG NAME	140283 C04.DWG
ISSUE DATE	10/07/16
GCI PROJ MGR	JMP

PIPE PROFILES I

C04.7
SHEET NUMBER

ISSUED FOR PERMITTING

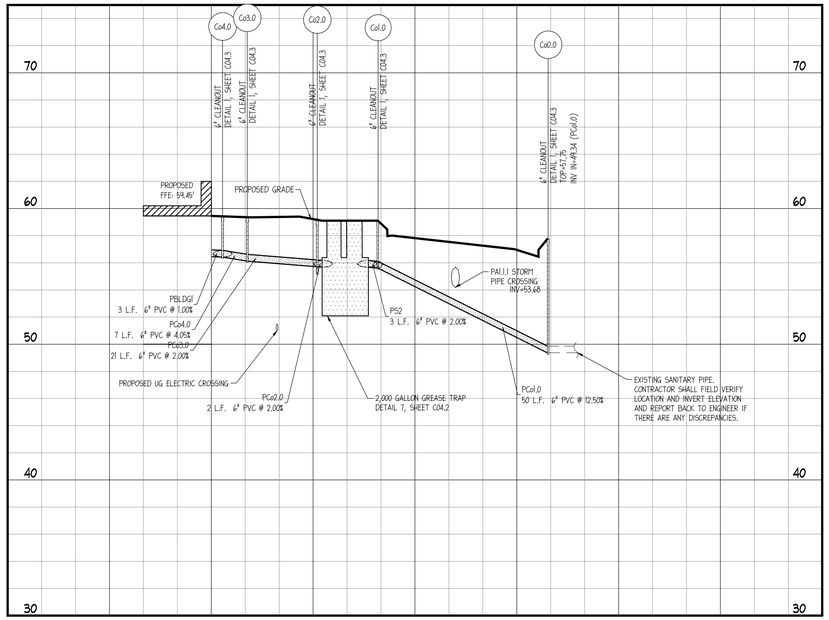

HORIZONTAL SCALE: 1"=20'
VERTICAL SCALE: 1"=5'

SANITARY PROFILE Co1.2 - Co1.0

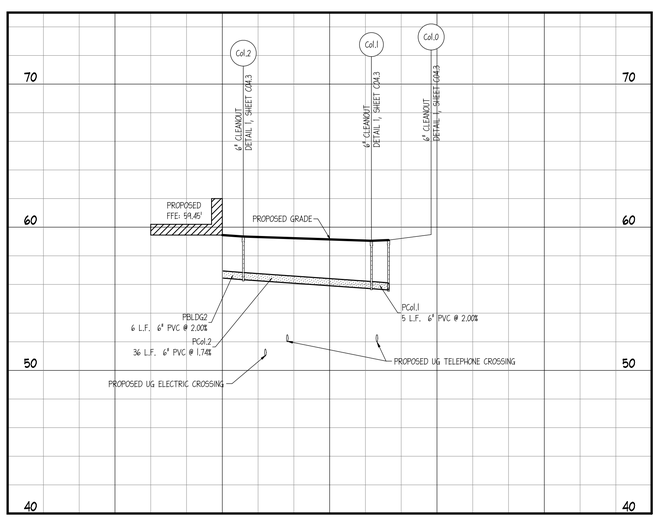

HORIZONTAL SCALE: 1"=20'
VERTICAL SCALE: 1"=5'

SANITARY PIPE TABLE				
NAME	SIZE	LENGTH	SLOPE	MATERIAL
PBLDG1	6"	3'	1.00%	PVC
PBLDG2	6"	6'	2.00%	PVC
PCo1.0	6"	50'	12.50%	PVC
PCo1.1	6"	5'	2.00%	PVC
PCo1.2	6"	36'	1.74%	PVC
PCo2.0	6"	2'	2.00%	PVC
PCo2.1	6"	49'	1.00%	PVC
PCo2.2	6"	49'	1.00%	PVC
PCo2.3	6"	48'	1.00%	PVC
PCo3.0	6"	21'	2.00%	PVC
PCo4.0	6"	7'	4.05%	PVC
PS2	6"	3'	2.00%	PVC
PS3	6"	24'	1.00%	PVC

SANITARY STRUCTURE TABLE				
STRUCTURE NAME	STRUCTURE TYPE	RIM ELEVATION	INVERT IN	INVERT OUT
BLDG1	STUB AT BUILDING	59.45		56.45 (PBLDG1)
BLDG2	STUB AT BUILDING	59.45		56.45 (PBLDG2)
Co0.0	6" CLEANOUT DETAIL 1, SHEET C04.3	57.75	49.34 (PCo1.0)	
Co1.0	6" CLEANOUT DETAIL 1, SHEET C04.3	59.10	55.61 (PS2) 55.61 (PCo1.1)	55.61 (PCo1.0)
Co1.1	6" CLEANOUT DETAIL 1, SHEET C04.3	59.05	55.71 (PCo1.2)	55.71 (PCo1.1)
Co1.2	6" CLEANOUT DETAIL 1, SHEET C04.3	59.30	56.33 (PBLDG2)	56.33 (PCo1.2)
Co2.0	6" CLEANOUT DETAIL 1, SHEET C04.3	59.10	55.71 (PCo3.0) 55.22 (PCo2.1)	55.71 (PCo2.0)
Co2.1	6" CLEANOUT DETAIL 1, SHEET C04.3	59.10	55.71 (PCo2.2)	55.71 (PCo2.1)
Co2.2	6" CLEANOUT DETAIL 1, SHEET C04.3	59.10	56.20 (PCo2.3)	56.20 (PCo2.2)
Co2.3	6" CLEANOUT DETAIL 1, SHEET C04.3	59.10	56.68 (PS3)	56.68 (PCo2.3)
Co3.0	6" CLEANOUT DETAIL 1, SHEET C04.3	59.35	56.12 (PCo4.0)	56.12 (PCo3.0)
Co4.0	6" CLEANOUT DETAIL 1, SHEET C04.3	59.35	56.42 (PBLDG1)	56.42 (PCo4.0)
S2	1,500 GALLON GREASE TRAP	59.10		
S2 IN	1,500 GALLON GREASE TRAP	59.10	55.67 (PCo2.0)	
S2 OUT	1,500 GALLON GREASE TRAP	59.10		55.68 (PS2)
S3	DUMPSTER DRAIN SEE ARCHITECTURAL PLANS FOR DETAIL	58.92		56.92 (PS3)

PROFILE NOTES

1. CONTROLLED BACK FILL TO BE PLACED IN 6" LOOSE LIFT AND COMPACTED TO 100% ASTM D698 PRIOR TO STORM AND SANITARY SEWER CONSTRUCTION, BACK FILL SHALL BE PLACED TO A MINIMUM OF ±2' ABOVE THE CROWN ELEVATION OF THE PIPES.
2. STORM DRAIN AND SANITARY SEWER LENGTHS ARE MEASURED FROM CENTER LINE OF STRUCTURE TO CENTERLINE OF STRUCTURE OR FACE OF HEADWALL.
3. ALL PIPE LENGTHS SHOWN ARE ROUNDED TO THE NEAREST FOOT.
4. ALL STORM DRAIN PIPING SHALL BE TRENCHED, BEDDED AND BACK FILLED ACCORDING WITH **DETAIL 1, ON SHEET C04.5** UNLESS SPECIFICALLY NOTED OTHERWISE.
5. ALL SANITARY SEWER PIPING SHALL BE TRENCHED, BEDDED AND BACK FILLED ACCORDING WITH **DETAIL 4, ON SHEET C04.2** UNLESS SPECIFICALLY NOTED OTHERWISE.
6. UNFORESEEN SUBSURFACE CONDITIONS SHALL BE BROUGHT TO THE OWNER'S AND ENGINEER'S ATTENTION IMMEDIATELY IMPLEMENTATION OF CORRECTIVE BEDDING MEASURES WITHOUT THE OWNER'S APPROVAL SHALL BE AT THE CONTRACTOR'S OWN RISK AND AT NO ADDITIONAL COMPENSATION.
7. EXISTING GRADES SHOWN ARE APPROXIMATE AND DO NOT REFLECT TOP SOIL REMOVAL, CLEARING, AND GRUBBING OPERATIONS. THE CONTRACTOR SHALL ASCERTAIN FOR HIMSELF THE EXTENT OF DISTURBANCE FOR THESE ACTIVITIES.
8. THE CONTRACTOR SHALL REFERENCE THE GEOTECHNICAL REPORT PREPARED FOR THE OWNER FOR SUBSURFACE CONDITIONS. THE GEOTECHNICAL REPORT IS NOT A PART OF THE CONTRACT DOCUMENTS.
9. EXCAVATIONS FOR STRUCTURES SHALL BE TAKEN AS A TRENCHING EXCAVATION WITHOUT FURTHER COMPENSATION.
10. SEE SHEET C01.1 FOR GENERAL NOTES.

SANITARY PROFILE S3 - Co2.0

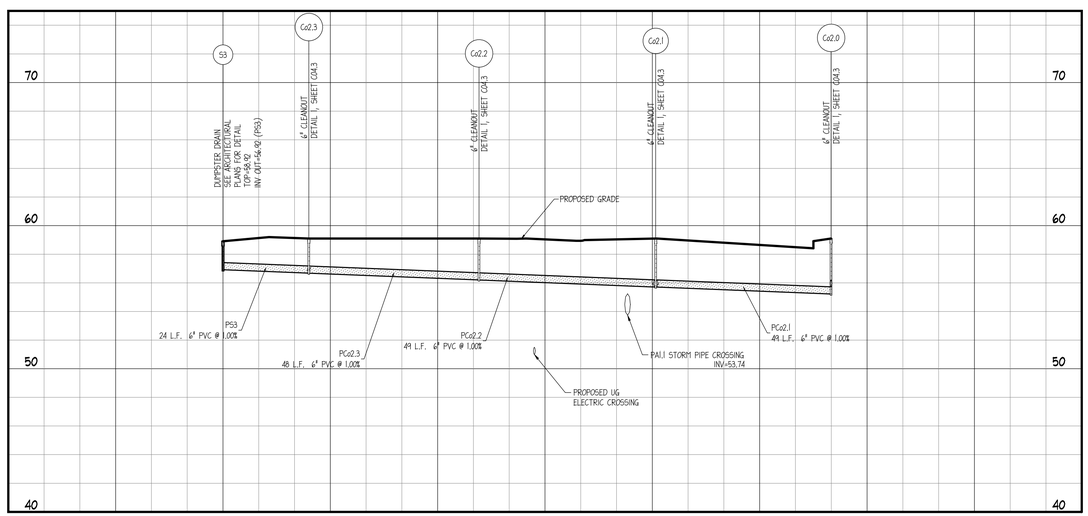

HORIZONTAL SCALE: 1"=20'
VERTICAL SCALE: 1"=5'

GRIMAIL CRAWFORD, INC.
ENGINEERING · PLANNING · GIS
3650 MANSELL ROAD
SUITE 495
ALPHARETTA, GA 30022
770.457.8850 844.833.6661 FAX
www.gc-inc.com

PANDA EXPRESS
CYPRESS CREEK TOWN CENTER
GRAND CYPRESS DRIVE
WESLEY CHAPEL, FLORIDA

PLANS FOR:

CLIENT:
PANDA RESTAURANT GROUP, INC.
1683 WALNUT GROVE AVE
ROSEMEAD, CA 91770
PHONE: (626) 372-8119

REVISION HISTORY

--/--/----	--/--/----
--/--/----	--/--/----
--/--/----	--/--/----
--/--/----	--/--/----
--/--/----	--/--/----
--/--/----	--/--/----
--/--/----	--/--/----

THE CIVIL ENGINEER REGULARLY UPDATES ELECTRONIC FILES DURING THE DEVELOPMENT OF A PROJECT. AS A RESULT, THE DATA INCLUDED IN ANY CAD FILE OR DRAWING PRIOR TO ITS FINAL RELEASE DOES NOT NECESSARILY REFLECT THE COMPLETE SCOPE OR CONTENT AS DEFINED IN THE CONTRACT. THE CONTENTS IN THESE FILES MAY THEREFORE BE PRELIMINARY, INCOMPLETE WORK IN PROGRESS, AND SUBJECT TO CHANGE. FURTHERMORE, THE INFORMATION CONTAINED HEREIN IS THE EXCLUSIVE PROPERTY OF THE CIVIL ENGINEER. THE ORIGINAL IDEAS REPRESENTED HERE BY THIS INFORMATION SHALL NOT BE USED, ALTERED, OR REPRODUCED IN ANY MANNER WITHOUT THE EXPRESSED WRITTEN CONSENT OF THE CIVIL ENGINEER. THESE PLANS ARE SUBJECT TO FEDERAL COPYRIGHT LAWS. ANY USE OF SAME WITHOUT EXPRESSED WRITTEN PERMISSION OF THE CIVIL ENGINEER IS PROHIBITED.

GCI PROJ #	140283
DWG NAME	140283 C04.DWG
ISSUE DATE	10/07/16
GCI PROJ MGR	JMP

PIPE PROFILES II

C04.8
SHEET NUMBER

ISSUED FOR PERMITTING

STORM STRUCTURE TABLE

STRUCTURE NAME	STRUCTURE TYPE	RIM ELEVATION	INVERT IN	INVERT OUT
A1	CURB INLET DETAIL 1, SHEET C04.3	56.60	53.10 (PA1.1) 53.10 (PA2)	53.10 (PA1)
A1.1	CURB INLET DETAIL 1, SHEET C04.3	57.35		53.81 (PA1.1)
A2	JUNCTION BOX DETAIL 1, SHEET C04.4	57.65	53.44 (PA3) 53.44 (PA2.1)	53.44 (PA2)
A2.1	CURB INLET DETAIL 1, SHEET C04.3	58.00		54.44 (PA2.1)
A3	GRATE INLET DETAIL 2, SHEET C04.3	57.90		53.96 (PA3)
EX1	EXISTING CATCH BASIN	58.00	52.82 (PA1)	

STORM PIPE TABLE

NAME	SIZE	LENGTH	SLOPE	MATERIAL
PA1	18"	28'	1.00%	RCP
PA1.1	15"	142'	0.50%	RCP
PA2	18"	34'	1.00%	RCP
PA2.1	18"	100'	1.00%	RCP
PA3	18"	52'	1.00%	RCP

100-YEAR STORM CHART

LINE ID	HGL Dn (FT)	HGL Up (FT)	TOTAL RUNOFF (CFS)	CAPAC FULL (CFS)	VEL AVG (FT/S)	RUNOFF COEFF. (C)	AREA (TOTAL ACREAGE)
PA1	53.75	54.03	5.78	10.53	2.42	0.86	0.20
PA1.1.1	54.07	54.83	1.11	10.52	2.98	0.87	0.13
PA1.2	54.07	54.45	1.71	10.54	2.29	0.87	0.20
PA2	54.03	54.30	1.47	4.56	2.04	0.83	0.18

GRADING & DRAINAGE LEGEND

GRADING/DRAINAGE	LINETYPE/SYMBOL	REFERENCE
GRADE	1000	SEE PLANS
SPOT ELEVATION	× 1000.00	SEE PLANS
STORM DRAIN		SEE PLANS
HEADWALL (HW) / FLARED END SECTION (FES)		"
DROP INLET (GRATE)		DETAIL 4, SHEET C04.3
CURB INLET (GRATE AND HOOD)		DETAIL 1, SHEET C04.3
JUNCTION BOX (J.B.) / OCS		DETAIL 1, SHEET C04.4
CATCH BASIN (SINGLE WING)		"
PEDESTAL TOP		"
STORM STRUCTURE NUMBER	A3	SEE PLANS

LOCATION MAP

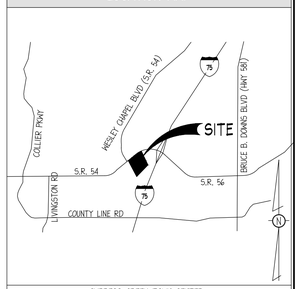

CYPRESS CREEK TOWN CENTER
N.T.S.

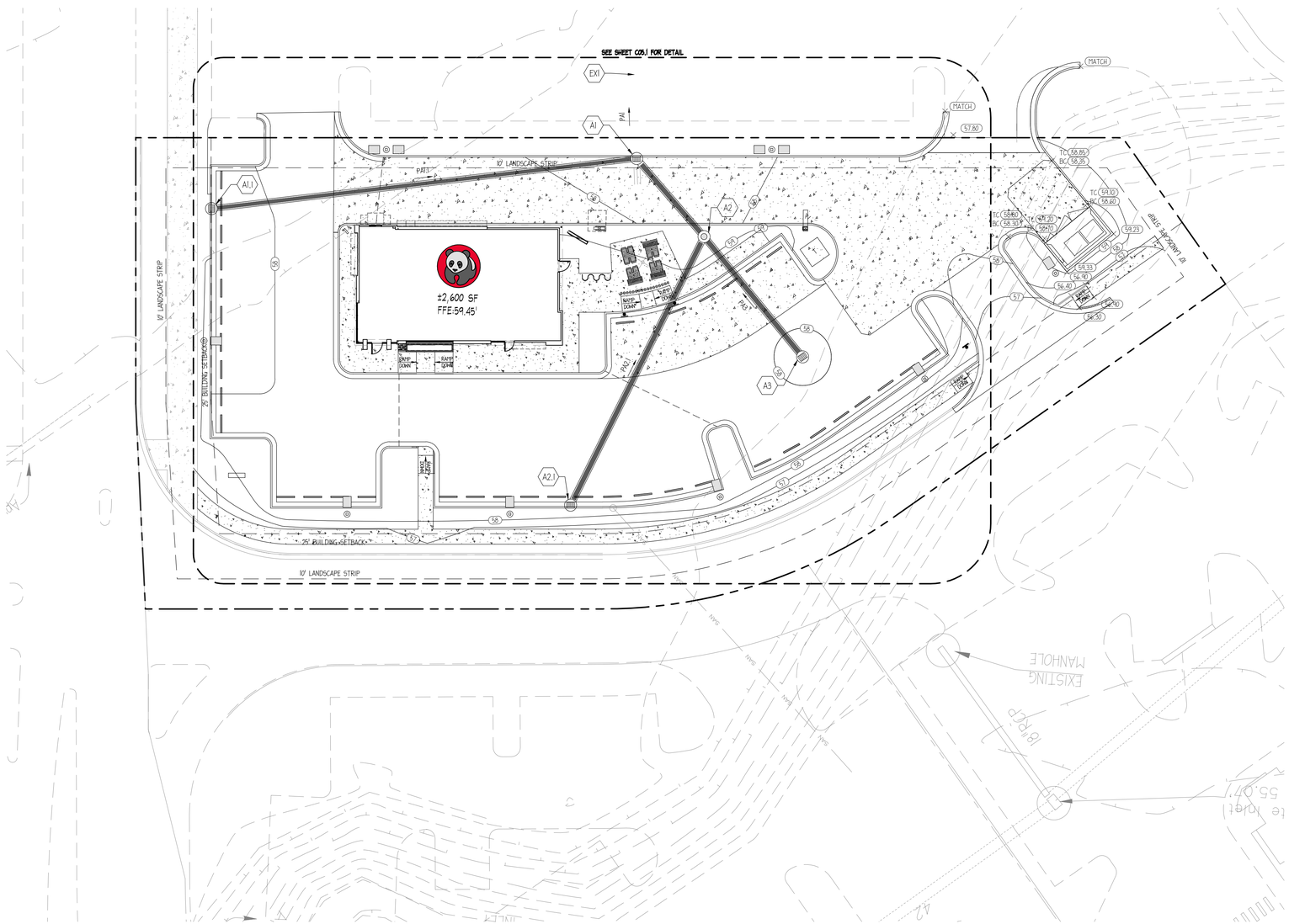

GRADING & DRAINAGE NOTES

1. SEE LANDSCAPE PLAN FOR REQUIRED TREES AND GROUND COVER.
2. SLOPE OF SURFACE GRADE SHALL BE A MINIMUM OF **1.00%**
3. MAXIMUM CUT OF FILL SLOPES IS 2H:1V.
4. THE CONTRACTOR SHALL PROVIDE CLEAN, SUITABLE MATERIAL FOR REQUIRED FILL. SHOULD A SUFFICIENT QUANTITY OF SUITABLE MATERIAL NOT BE AVAILABLE FROM THE REQUIRED EXCAVATION ON THE SITE.
5. ALL FILL SHOULD BE PLACED IN THIN, HORIZONTAL LOOSE LIFTS (MAXIMUM 6-INCH) AND COMPACTED TO AT LEAST 100 PERCENT OF THE STANDARD PROCTOR MAXIMUM DRY DENSITY (ASTM D 698). THE UPPER 8 INCHES OF SOIL BENEATH PAVEMENTS AND SLAB-ON-GRADE SHOULD BE COMPACTED TO AT LEAST 100 PERCENT. COMPACTION MUST BE CERTIFIED BY A GEORGIA REGISTERED PROFESSIONAL SOILS ENGINEER PRIOR TO THE INSTALLATION OF PAVEMENTS, CURBS, SIDEWALKS OR FOOTINGS OF ANY TYPE.
6. DETENTION POND, DETENTION OUTLET STRUCTURES AND TEMPORARY SEDIMENT POND FEATURES ARE TO BE FULLY CONSTRUCTED AND OPERATIONAL PRIOR TO ANY OTHER CONSTRUCTION OR GRADING ON THE SITE AND MAINTAINED UNTIL PERMANENT GROUND COVER IS ESTABLISHED.
7. LENGTH OF RIP-RAP PADS AT PIPE OUTLET STRUCTURES TO BE A MINIMUM LENGTH OF (6) SIX TIMES THE DIAMETER OF THE PIPE.
8. JURISDICTIONAL LAND DISTURBANCE PERMIT MUST BE DISPLAYED ON SITE AT ALL TIMES DURING CONSTRUCTION AND IN PLAIN VIEW FROM A PUBLIC ROAD OR STREET.
9. SEE SHEET C01.1 FOR GENERAL NOTES.

HYDROLOGY STATEMENT

THE PROPOSED PROJECT WILL CONSIST OF BUILDING A PANDA EXPRESS QUICK SERVICE RESTAURANT WITH A DRIVE-THRU, PARKING, AND LANDSCAPE FEATURES. THE PROJECT WILL BE BUILT IN AN EXISTING TRACT OF LAND WHICH IS PART OF A LARGER SHOPPING CENTER DEVELOPMENT. THE PROPOSED SITE CONSISTS OF 1.07 ACRES, OF WHICH 0.92 ACRES WILL BE IMPERVIOUS. THE PROPOSED SITE WILL UTILIZE A STORMWATER MANAGEMENT SYSTEM CONSISTING OF SEVERAL CATCH BASINS TO CAPTURE RUNOFF AND A PIPE SYSTEM TO CONVEY THE DISCHARGE INTO THE SHOPPING CENTER'S STORM CONVEYANCE SYSTEM. ONCE IN THE SHOPPING CENTER'S STORM CONVEYANCE, THE DISCHARGE WILL FLOW INTO THE SHOPPING CENTER'S DETENTION POND.

CONTRACTOR SHALL PROTECT ALL ITEMS OUTSIDE LIMITS OF CONSTRUCTION UNLESS OTHERWISE NOTED IN THE CONSTRUCTION PLANS OR SPECIFICATIONS.

CONTRACTOR SHALL FIELD VERIFY ALL EXISTING UTILITIES (LOCATIONS AND ELEVATIONS) PRIOR TO STARTING CONSTRUCTION AND ALERT ENGINEER TO ANY DISCREPANCIES IMMEDIATELY.

24-HOUR CONTACT:
MS. JANICE MORRISS
626.372.8292

Sunshine 811
Always call 811 before you dig.

N

GRAPHIC SCALE (in feet.): 1" = 20'
10' 0' 20' 40'

GRIMAIL CRAWFORD, INC.
ENGINEERING · PLANNING · GIS
3650 MANSELL ROAD
SUITE 495
ALPHARETTA, GA 30022
770.437.8850 844.833.6661 FAX
www.gc-inc.com

PANDA EXPRESS
CYPRESS CREEK TOWN CENTER
GRAND CYPRESS DRIVE
WESLEY CHAPEL, FLORIDA

PANDA EXPRESS · CHINESE KITCHEN

PLANS FOR:

CLIENT:
PANDA RESTAURANT GROUP, INC.
1683 WALNUT GROVE AVE
ROSEMEAD, CA 91770
PHONE: (626) 372-8119

REVISION HISTORY

--/--/----	--/--/----
--/--/----	--/--/----
--/--/----	--/--/----
--/--/----	--/--/----
--/--/----	--/--/----
--/--/----	--/--/----
--/--/----	--/--/----

THE CIVIL ENGINEER REGULARLY UPDATES ELECTRONIC FILES DURING THE DEVELOPMENT OF A PROJECT. AS A RESULT, THE DATA INCLUDED IN ANY CAD FILE OR DRAWING PRIOR TO ITS FINAL RELEASE DOES NOT NECESSARILY REFLECT THE COMPLETE SCOPE OR CONTENT AS DEFINED IN THE CONTRACT. THE CONTENTS IN THESE FILES MAY THEREFORE BE PRELIMINARY, INCOMPLETE WORK IN PROGRESS, AND SUBJECT TO CHANGE. FURTHERMORE, THE INFORMATION CONTAINED HEREIN IS THE EXCLUSIVE PROPERTY OF THE CIVIL ENGINEER. THE ORIGINAL IDEAS REPRESENTED HERE BY THIS INFORMATION SHALL NOT BE USED, ALTERED, OR REPRODUCED IN ANY MANNER WITHOUT THE EXPRESSED WRITTEN CONSENT OF THE CIVIL ENGINEER. THESE PLANS ARE SUBJECT TO FEDERAL COPYRIGHT LAWS. ANY USE OF SAME WITHOUT EXPRESSED WRITTEN PERMISSION OF THE CIVIL ENGINEER IS PROHIBITED.

GCI PROJ #	140283
DWG NAME	140283 C05.DWG
ISSUE DATE	10/07/15
GCI PROJ MGR	JMP

GRADING & DRAINAGE PLAN

C05.0
SHEET NUMBER

ISSUED FOR PERMITTING

GRADING & DRAINAGE LEGEND

GRADING/DRAINAGE	LINETYPE/SYMBOL	REFERENCE
GRADE	1000	SEE PLANS
SPOT ELEVATION	× 1000.00	SEE PLANS
STORM DRAIN		SEE PLANS
HEADWALL (HW) / FLARED END SECTION (FES)		"
DROP INLET (GRATE)		DETAIL 4, SHEET C04.3
CURB INLET (GRATE AND HOOD)		DETAIL 1, SHEET C04.3
JUNCTION BOX (J.B.) / OCS		DETAIL 1, SHEET C04.4
CATCH BASIN (SINGLE WING)		"
PEDESTAL TOP		"
STORM STRUCTURE NUMBER	A3	SEE PLANS

LOCATION MAP

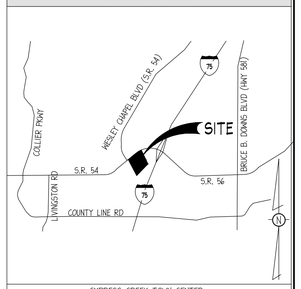

CYPRESS CREEK TOWN CENTER
N.T.S.

BUILDING AREA NOTES

1. MAINTAIN ACCESS FOR EMERGENCY VEHICLES AROUND AND TO ALL BUILDINGS UNDER CONSTRUCTION; i.e. IN TIMES OF RAIN OR MUD, ROADS SHALL BE PASSABLE TO EMERGENCY VEHICLES BY BEING PAVED OR HAVING A CRUSHED STONE BASE ETC... WITH A MINIMUM WIDTH OF 20 FEET. THE ACCESS TO BUILDINGS HAVING SPRINKLER OR STANDPIPE SYSTEMS SHALL BE TO WITHIN 40 FEET OF THE FIRE DEPARTMENT CONNECTION (NFPA 1141 3-1).
2. CONTRACTOR TO PROVIDE POSITIVE DRAINAGE AWAY FROM BUILDING IN ALL AREAS AROUND BUILDING. INSTALL FRENCH DRAIN IN LANDSCAPED AREAS ADJACENT TO BUILDING AND CONNECT TO DRAINAGE SYSTEM.
3. SEE SHEET C01 FOR GENERAL NOTES.

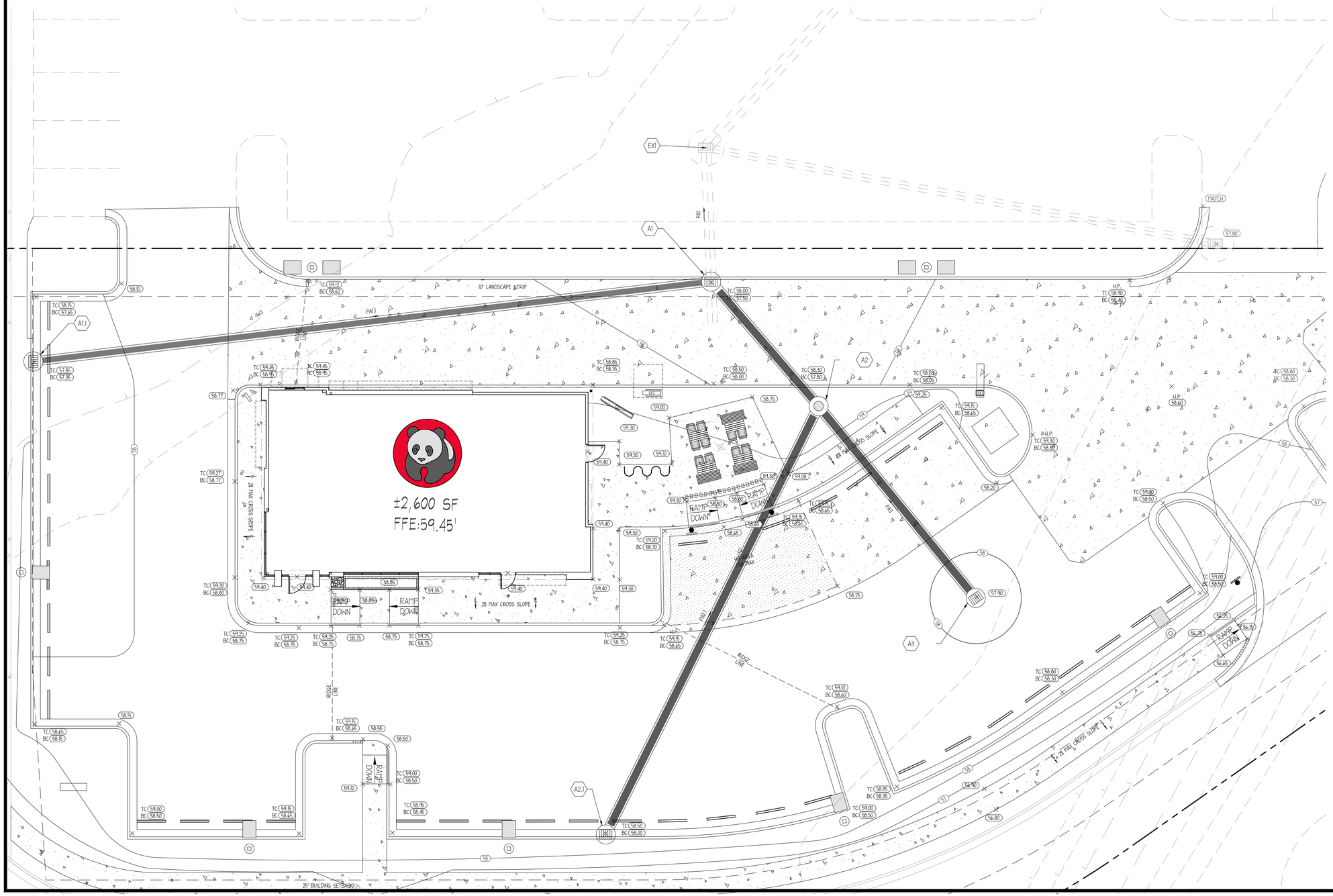

CONTRACTOR SHALL PROTECT ALL ITEMS OUTSIDE LIMITS OF CONSTRUCTION UNLESS OTHERWISE NOTED IN THE CONSTRUCTION PLANS OR SPECIFICATIONS.

CONTRACTOR SHALL FIELD VERIFY ALL EXISTING UTILITIES (LOCATIONS AND ELEVATIONS) PRIOR TO STARTING CONSTRUCTION AND ALERT ENGINEER TO ANY DISCREPANCIES IMMEDIATELY.

24-HOUR CONTACT:
MS. JANICE MORRISS
626.372.8292

Sunshine 811
Always call 811 before you dig.

GRAPHIC SCALE (in feet): 1" = 10'
5' 0' 10' 20'

GRIMAIL CRAWFORD, INC.
ENGINEERING · PLANNING · GIS
3650 MANSELL ROAD
SUITE 495
ALPHARETTA, GA 30022
770.437.8850 844.833.6661 FAX
www.gc-inc.com

PANDA EXPRESS
CYPRESS CREEK TOWN CENTER
GRAND CYPRESS DRIVE
WESLEY CHAPEL, FLORIDA

PANDA EXPRESS · CHINESE KITCHEN

PLANS FOR:

CLIENT:
PANDA RESTAURANT GROUP, INC.
1683 WALNUT GROVE AVE
ROSEMEAD, CA 91770
PHONE: (626) 372-8119

REVISION HISTORY

--/--/----	--/--/----
--/--/----	--/--/----
--/--/----	--/--/----
--/--/----	--/--/----
--/--/----	--/--/----
--/--/----	--/--/----
--/--/----	--/--/----

THE CIVIL ENGINEER REGULARLY UPDATES ELECTRONIC FILES DURING THE DEVELOPMENT OF A PROJECT. AS A RESULT, THE DATA INCLUDED IN ANY CAD FILE OR DRAWING PRIOR TO ITS FINAL RELEASE DOES NOT NECESSARILY REFLECT THE COMPLETE SCOPE OR CONTENT AS DEFINED IN THE CONTRACT. THE CONTENTS IN THESE FILES MAY THEREFORE BE PRELIMINARY, INCOMPLETE WORK IN PROGRESS, AND SUBJECT TO CHANGE. FURTHERMORE, THE INFORMATION CONTAINED HEREIN IS THE EXCLUSIVE PROPERTY OF THE CIVIL ENGINEER. THE ORIGINAL IDEAS REPRESENTED HERE BY THIS INFORMATION SHALL NOT BE USED, ALTERED, OR REPRODUCED IN ANY MANNER WITHOUT THE EXPRESSED WRITTEN CONSENT OF THE CIVIL ENGINEER. THESE PLANS ARE SUBJECT TO FEDERAL COPYRIGHT LAWS. ANY USE OF SAME WITHOUT EXPRESSED WRITTEN PERMISSION OF THE CIVIL ENGINEER IS PROHIBITED.

GCI PROJ #	140283
DWG NAME	140283 C05.DWG
ISSUE DATE	10/07/15
GCI PROJ MGR	JMP

BUILDING AREA
GRADING DETAIL

C05.1
SHEET NUMBER

ISSUED FOR PERMITTING

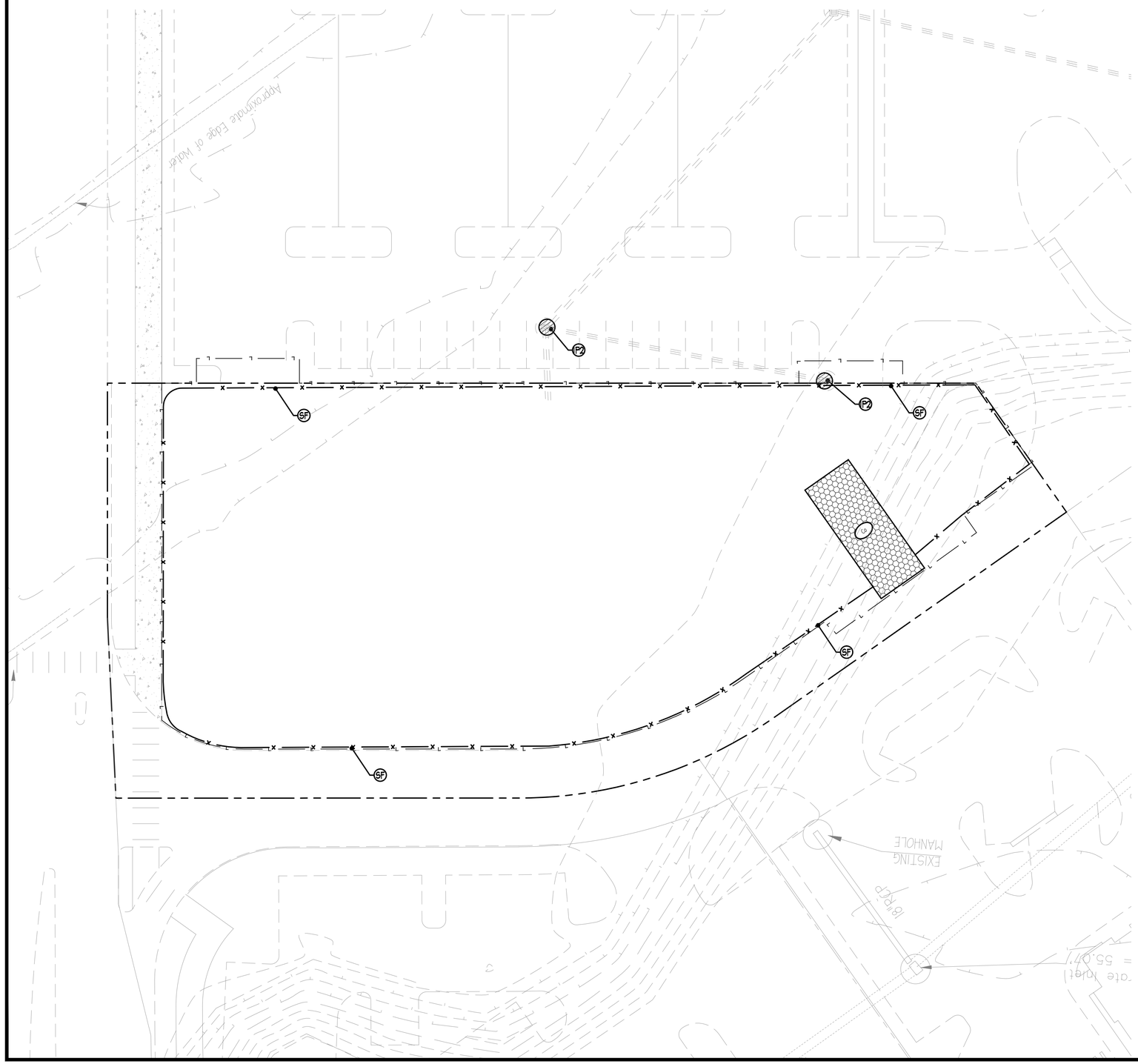

EROSION CONTROL LEGEND

	ESPC BMP	LINETYPE/SYMBOL	REFERENCE
	CONSTRUCTION EXIT		SHEET C06.3
SF	SEDIMENT FENCE		SHEET C06.3
IP	INLET PROTECTION		SHEET C06.5
OP	OUTLET PROTECTION		NOT APPLICABLE
TS	TEMPORARY SEEDING	TS	SHEET C06.4
PS	PERMANENT SEEDING	PS	SHEET C06.4
	TREE PROTECTION FENCE	TPF	SHEET L01.1
	LIMITS OF CONSTRUCTION	L	

SEE EXISTING CONDITIONS/SURVEY AND LANDSCAPE/TREE PROTECTION PLANS FOR LEGENDS SPECIFIC TO THOSE SHEETS

LOCATION MAP

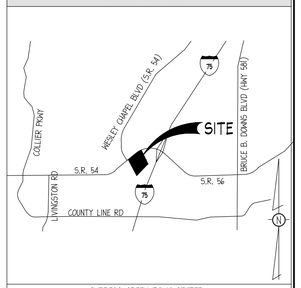

CYPRESS CREEK TOWN CENTER
N.T.S.

ESPC NOTES

GENERAL

1. EROSION CONTROL MEASURES SHALL BE MAINTAINED AT ALL TIMES. IF FULL IMPLEMENTATION OF THE APPROVED PLAN DOES NOT PROVIDE FOR EFFECTIVE EROSION CONTROL, ADDITIONAL EROSION CONTROL MEASURES AND PRACTICES SHALL BE IMPLEMENTED TO CONTROL OR TREAT THE SEDIMENT SOURCE AT THE EXPENSE OF THE CONTRACTOR.
2. SEE GRADING & DRAINAGE NOTES.

SLOPES AND DISTURBED AREA STABILIZATION

1. CONCENTRATED FLOW AREAS AND ALL SLOPES 2H:1V OR STEEPER SHALL BE STABILIZED WITH THE APPROPRIATE EROSION CONTROL MATTING OR BLANKET.
2. ALL CUT AND FILL SLOPES MUST BE SURFACE ROUGHENED AND VEGETATED WITHIN (7) DAYS OF THEIR CONSTRUCTION.
3. ALL DISTURBED AREAS SHALL BE GRASSED AS SOON AS CONSTRUCTION PHASES PERMIT. NO EXPOSED GRADE WILL BE LEFT UNSTABILIZED FOR MORE THAN 7 DAYS.
4. PERMANENT GRASSING AND LANDSCAPING OF DISTURBED AREAS SHALL BE COMPLETED AS QUICKLY AS POSSIBLE. TEMPORARY STABILIZATION BY MULCHING AND/OR TEMPORARY SEEDING WILL BE REQUIRED IN THE EVENT OF PROJECT DELAYS.
5. TYPE 'C' SILT BARRIERS SHALL BE PLACED AT THE TOE OF ALL FILL SLOPES.

DRAINAGE

1. ALL DRAINAGE STRUCTURES SHALL BE EROSION PROOFED.
2. LENGTH OF RIP-RAP PADS AT PIPE OUTLETS SHALL BE A MINIMUM LENGTH OF (4) SIX TIMES THE DIAMETER OF THE PIPE IN FEET.
3. A 25' UNDISTURBED VEGETATIVE STREAM BUFFER ADJACENT TO ALL RUNNING STREAMS AND CREEKS WILL BE LEFT UNDISTURBED AND MAINTAINED THROUGH ALL PHASES OF CONSTRUCTION. REFER TO PLANS FOR EXACT LOCATIONS.

TREE PROTECTION

1. ALL BUFFERS AND TREE SAVE AREAS SHALL BE CLEARLY IDENTIFIED WITH FLAGGING AND/OR FENCING PRIOR TO COMMENCEMENT OF ANY LAND DISTURBANCE.
2. ALL TREE PROTECTION DEVICES SHALL BE INSTALLED PRIOR TO START OF LAND DISTURBANCE AND MAINTAINED UNTIL FINAL LANDSCAPING IS INSTALLED.
3. NO PARKING, STORAGE, OR OTHER CONSTRUCTION SITE ACTIVITIES ARE TO OCCUR WITHIN TREE PROTECTION AREAS.

MAINTENANCE AND INSPECTIONS

1. SEDIMENT AND EROSION CONTROL MEASURES AND PRACTICES SHALL BE INSPECTED DAILY.
2. SEDIMENT STORAGE MAINTENANCE INDICATORS MUST BE INSTALLED IN SEDIMENT STORAGE STRUCTURES, INDICATING THE 1/3 FULL VOLUME.
3. SEDIMENT CONTROL DEVICES MUST BE INSPECTED DAILY AND CHECKED AFTER EACH STORM EVENT AND CLEANED OR REPLACED WHEN THEY REACH 1/3 OF DESIGN CAPACITY.
4. ALL TREE PROTECTION FENCING TO BE INSPECTED DAILY AND REPLACED OR REPAIRED AS NEEDED.
5. MAINTENANCE OF ALL SOIL AND SEDIMENTATION CONTROL MEASURES AND PRACTICES, WHETHER TEMPORARY OR PERMANENT, SHALL BE AT ALL TIMES THE RESPONSIBILITY OF THE CONTRACTOR.

CONTRACTOR SHALL PROTECT ALL ITEMS OUTSIDE LIMITS OF CONSTRUCTION UNLESS OTHERWISE NOTED IN THE CONSTRUCTION PLANS OR SPECIFICATIONS.

CONTRACTOR SHALL FIELD VERIFY ALL EXISTING UTILITIES (LOCATIONS AND ELEVATIONS) PRIOR TO STARTING CONSTRUCTION AND ALERT ENGINEER TO ANY DISCREPANCIES IMMEDIATELY.

24-HOUR CONTACT:
MS. JANICE MORRISS
626.372.8292

Sunshine811
Always call 811 before you dig.

N

GRAPHIC SCALE (in feet): 1" = 20'
10' 0' 20' 40'

GRIMAIL CRAWFORD, INC.
ENGINEERING • PLANNING • GIS
3650 MANSELL ROAD
SUITE 495
ALPHARETTA, GA 30022
770.437.8850 844.833.6661 FAX
www.gc-inc.com

PANDA EXPRESS
CYPRESS CREEK TOWN CENTER
GRAND CYPRESS DRIVE
WESLEY CHAPEL, FLORIDA

PANDA EXPRESS • CHINESE KITCHEN

PLANS FOR:

CLIENT:
PANDA RESTAURANT GROUP, INC.
1683 WALNUT GROVE AVE
ROSEMEAD, CA 91770
PHONE: (626) 372-8119

REVISION HISTORY

--/--/----	--/--/----
--/--/----	--/--/----
--/--/----	--/--/----
--/--/----	--/--/----
--/--/----	--/--/----
--/--/----	--/--/----
--/--/----	--/--/----

THE CIVIL ENGINEER REGULARLY UPDATES ELECTRONIC FILES DURING THE DEVELOPMENT OF A PROJECT. AS A RESULT, THE DATA INCLUDED IN ANY CAD FILE OR DRAWING PRIOR TO ITS FINAL RELEASE DOES NOT NECESSARILY REFLECT THE COMPLETE SCOPE OR CONTENT AS DEFINED IN THE CONTRACT. THE CONTENTS IN THESE FILES MAY THEREFORE BE PRELIMINARY, INCOMPLETE WORK IN PROGRESS, AND SUBJECT TO CHANGE. FURTHERMORE, THE INFORMATION CONTAINED HEREIN IS THE EXCLUSIVE PROPERTY OF THE CIVIL ENGINEER. THE ORIGINAL IDEAS REPRESENTED HERE BY THIS INFORMATION SHALL NOT BE USED, ALTERED, OR REPRODUCED IN ANY MANNER WITHOUT THE EXPRESSED WRITTEN CONSENT OF THE CIVIL ENGINEER. THESE PLANS ARE SUBJECT TO FEDERAL COPYRIGHT LAWS; ANY USE OF SAME WITHOUT EXPRESSED WRITTEN PERMISSION OF THE CIVIL ENGINEER IS PROHIBITED.

GCI PROJ #	140283
DWG NAME	140283 C06.DWG
ISSUE DATE	10/07/15
GCI PROJ MGR	JMP

ESPC PLAN
PHASE I

C06.0
SHEET NUMBER

ISSUED FOR PERMITTING

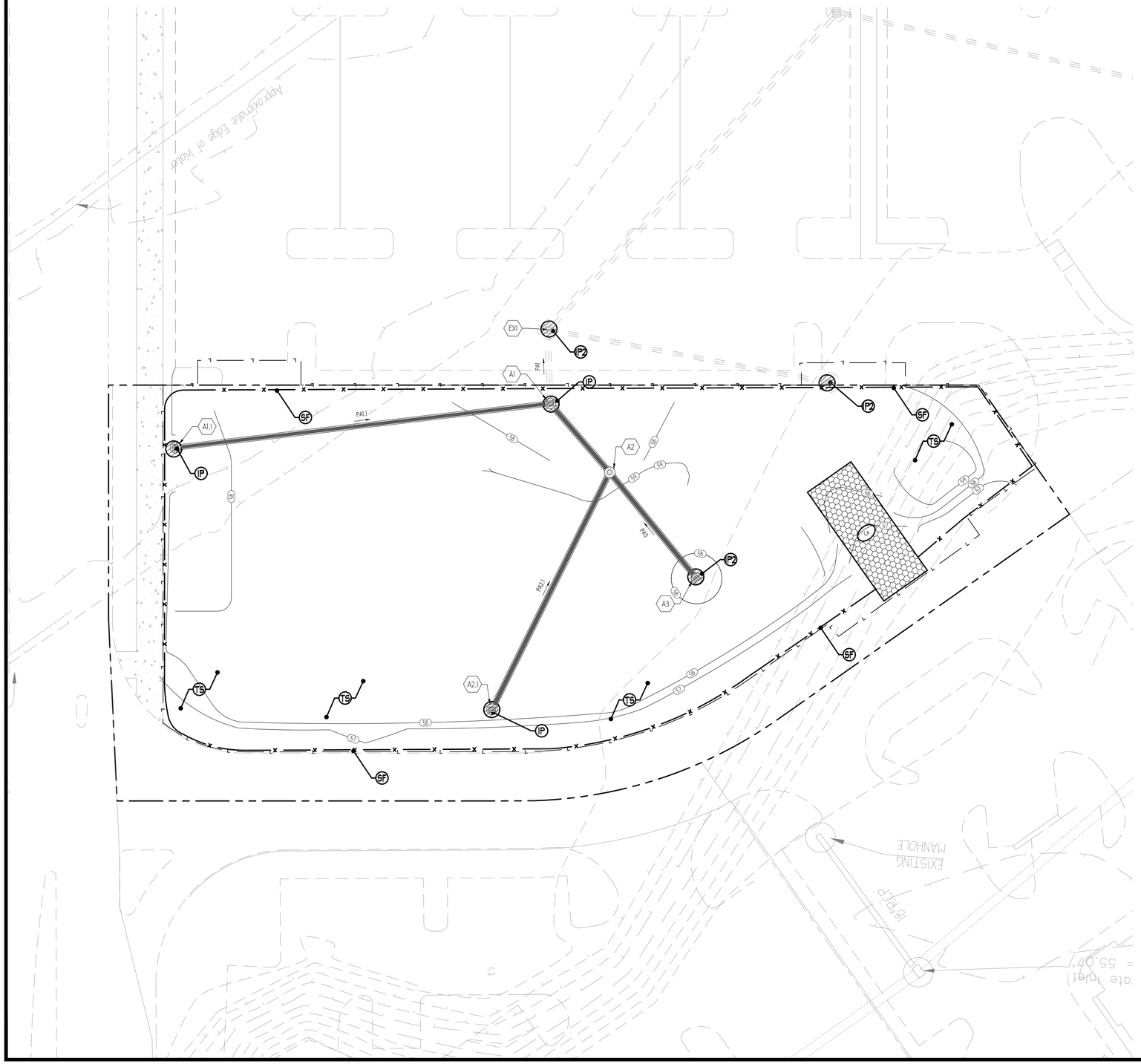

EROSION CONTROL LEGEND

ESPC BMP	LINETYPE/SYMBOL	REFERENCE
CONSTRUCTION EXIT		SHEET C06.3
SF SEDIMENT FENCE		SHEET C06.3
IP INLET PROTECTION		SHEET C06.5
OP OUTLET PROTECTION		NOT APPLICABLE
TS TEMPORARY SEEDING	TS	SHEET C06.4
PS PERMANENT SEEDING	PS	SHEET C06.4
TREE PROTECTION FENCE	TPF	SHEET L01.1
LIMITS OF CONSTRUCTION	L	

SEE EXISTING CONDITIONS/SURVEY AND LANDSCAPE/TREE PROTECTION PLANS FOR LEGENDS SPECIFIC TO THOSE SHEETS

LOCATION MAP

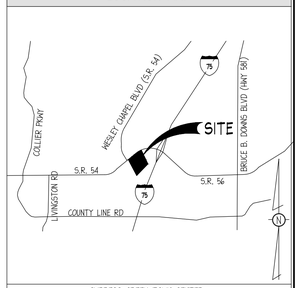

CYPRESS CREEK TOWN CENTER
N.T.S.

ESPC NOTES

GENERAL

1. EROSION CONTROL MEASURES SHALL BE MAINTAINED AT ALL TIMES. IF FULL IMPLEMENTATION OF THE APPROVED PLAN DOES NOT PROVIDE FOR EFFECTIVE EROSION CONTROL, ADDITIONAL EROSION CONTROL MEASURES AND PRACTICES SHALL BE IMPLEMENTED TO CONTROL OR TREAT THE SEDIMENT SOURCE AT THE EXPENSE OF THE CONTRACTOR.
2. SEE GRADING & DRAINAGE NOTES.

SLOPES AND DISTURBED AREA STABILIZATION

1. CONCENTRATED FLOW AREAS AND ALL SLOPES 2H:1V OR STEEPER SHALL BE STABILIZED WITH THE APPROPRIATE EROSION CONTROL MATTING OR BLANKET.
2. ALL CUT AND FILL SLOPES MUST BE SURFACE ROUGHENED AND VEGETATED WITHIN (7) DAYS OF THEIR CONSTRUCTION.
3. ALL DISTURBED AREAS SHALL BE GRASSED AS SOON AS CONSTRUCTION PHASES PERMIT. NO EXPOSED GRADE WILL BE LEFT UNSTABILIZED FOR MORE THAN 7 DAYS.
4. PERMANENT GRASSING AND LANDSCAPING OF DISTURBED AREAS SHALL BE COMPLETED AS QUICKLY AS POSSIBLE. TEMPORARY STABILIZATION BY MULCHING AND/OR TEMPORARY SEEDING WILL BE REQUIRED IN THE EVENT OF PROJECT DELAYS.
5. TYPE 'C' SILT BARRIERS SHALL BE PLACED AT THE TOE OF ALL FILL SLOPES.

DRAINAGE

1. ALL DRAINAGE STRUCTURES SHALL BE EROSION PROOFED.
2. LENGTH OF RIP-RAP PADS AT PIPE OUTLETS SHALL BE A MINIMUM LENGTH OF (4) SIX TIMES THE DIAMETER OF THE PIPE IN FEET.
3. A 25' UNDISTURBED VEGETATIVE STREAM BUFFER ADJACENT TO ALL RUNNING STREAMS AND CREEKS WILL BE LEFT UNDISTURBED AND MAINTAINED THROUGH ALL PHASES OF CONSTRUCTION. REFER TO PLANS FOR EXACT LOCATIONS.

TREE PROTECTION

1. ALL BUFFERS AND TREE SAVE AREAS SHALL BE CLEARLY IDENTIFIED WITH FLAGGING AND/OR FENCING PRIOR TO COMMENCEMENT OF ANY LAND DISTURBANCE.
2. ALL TREE PROTECTION DEVICES SHALL BE INSTALLED PRIOR TO START OF LAND DISTURBANCE AND MAINTAINED UNTIL FINAL LANDSCAPING IS INSTALLED.
3. NO PARKING, STORAGE, OR OTHER CONSTRUCTION SITE ACTIVITIES ARE TO OCCUR WITHIN TREE PROTECTION AREAS.

MAINTENANCE AND INSPECTIONS

1. SEDIMENT AND EROSION CONTROL MEASURES AND PRACTICES SHALL BE INSPECTED DAILY.
2. SEDIMENT STORAGE MAINTENANCE INDICATORS MUST BE INSTALLED IN SEDIMENT STORAGE STRUCTURES, INDICATING THE 1/3 FULL VOLUME.
3. SEDIMENT CONTROL DEVICES MUST BE INSPECTED DAILY AND CHECKED AFTER EACH STORM EVENT AND CLEANED OR REPLACED WHEN THEY REACH 1/3 OF DESIGN CAPACITY.
4. ALL TREE PROTECTION FENCING TO BE INSPECTED DAILY AND REPLACED OR REPAIRED AS NEEDED.
5. MAINTENANCE OF ALL SOIL AND SEDIMENTATION CONTROL MEASURES AND PRACTICES, WHETHER TEMPORARY OR PERMANENT, SHALL BE AT ALL TIMES THE RESPONSIBILITY OF THE CONTRACTOR.

CONTRACTOR SHALL PROTECT ALL ITEMS OUTSIDE LIMITS OF CONSTRUCTION UNLESS OTHERWISE NOTED IN THE CONSTRUCTION PLANS OR SPECIFICATIONS.

CONTRACTOR SHALL FIELD VERIFY ALL EXISTING UTILITIES (LOCATIONS AND ELEVATIONS) PRIOR TO STARTING CONSTRUCTION AND ALERT ENGINEER TO ANY DISCREPANCIES IMMEDIATELY.

24-HOUR CONTACT:
MS. JANICE MORRISS
626.372.8292

Sunshine 811
Always call 811 before you dig!

N

GRAPHIC SCALE (in feet): 1" = 20'
10' 0' 20' 40'

GRIMAIL CRAWFORD, INC.
ENGINEERING · PLANNING · GIS
3650 MANSELL ROAD
SUITE 495
ALPHARETTA, GA 30022
770.437.8850 844.833.6661 FAX
www.gc-inc.com

PANDA EXPRESS
CYPRESS CREEK TOWN CENTER
GRAND CYPRESS DRIVE
WESLEY CHAPEL, FLORIDA

PANDA EXPRESS · CHINESE KITCHEN

PLANS FOR:

CLIENT:
PANDA RESTAURANT GROUP, INC.
1683 WALNUT GROVE AVE
ROSEMEAD, CA 91770
PHONE: (626) 372-8119

REVISION HISTORY

--/--/----	--/--/----
--/--/----	--/--/----
--/--/----	--/--/----
--/--/----	--/--/----
--/--/----	--/--/----
--/--/----	--/--/----
--/--/----	--/--/----

THE CIVIL ENGINEER REGULARLY UPDATES ELECTRONIC FILES DURING THE DEVELOPMENT OF A PROJECT. AS A RESULT, THE DATA INCLUDED IN ANY CAD FILE OR DRAWING PRIOR TO ITS FINAL RELEASE DOES NOT NECESSARILY REFLECT THE COMPLETE SCOPE OR CONTENT AS DEFINED IN THE CONTRACT. THE CONTENTS IN THESE FILES MAY THEREFORE BE PRELIMINARY, INCOMPLETE WORK IN PROGRESS, AND SUBJECT TO CHANGE. FURTHERMORE, THE INFORMATION CONTAINED HEREIN IS THE EXCLUSIVE PROPERTY OF THE CIVIL ENGINEER. THE ORIGINAL IDEAS REPRESENTED HERE BY THIS INFORMATION SHALL NOT BE USED, ALTERED, OR REPRODUCED IN ANY MANNER WITHOUT THE EXPRESSED WRITTEN CONSENT OF THE CIVIL ENGINEER. THESE PLANS ARE SUBJECT TO FEDERAL COPYRIGHT LAWS. ANY USE OF SAME WITHOUT EXPRESSED WRITTEN PERMISSION OF THE CIVIL ENGINEER IS PROHIBITED.

GCI PROJ #	140283
DWG NAME	140283 C06.DWG
ISSUE DATE	10/07/15
GCI PROJ MGR	JMP

ESPC PLAN
PHASE II

C06.1
SHEET NUMBER

ISSUED FOR PERMITTING

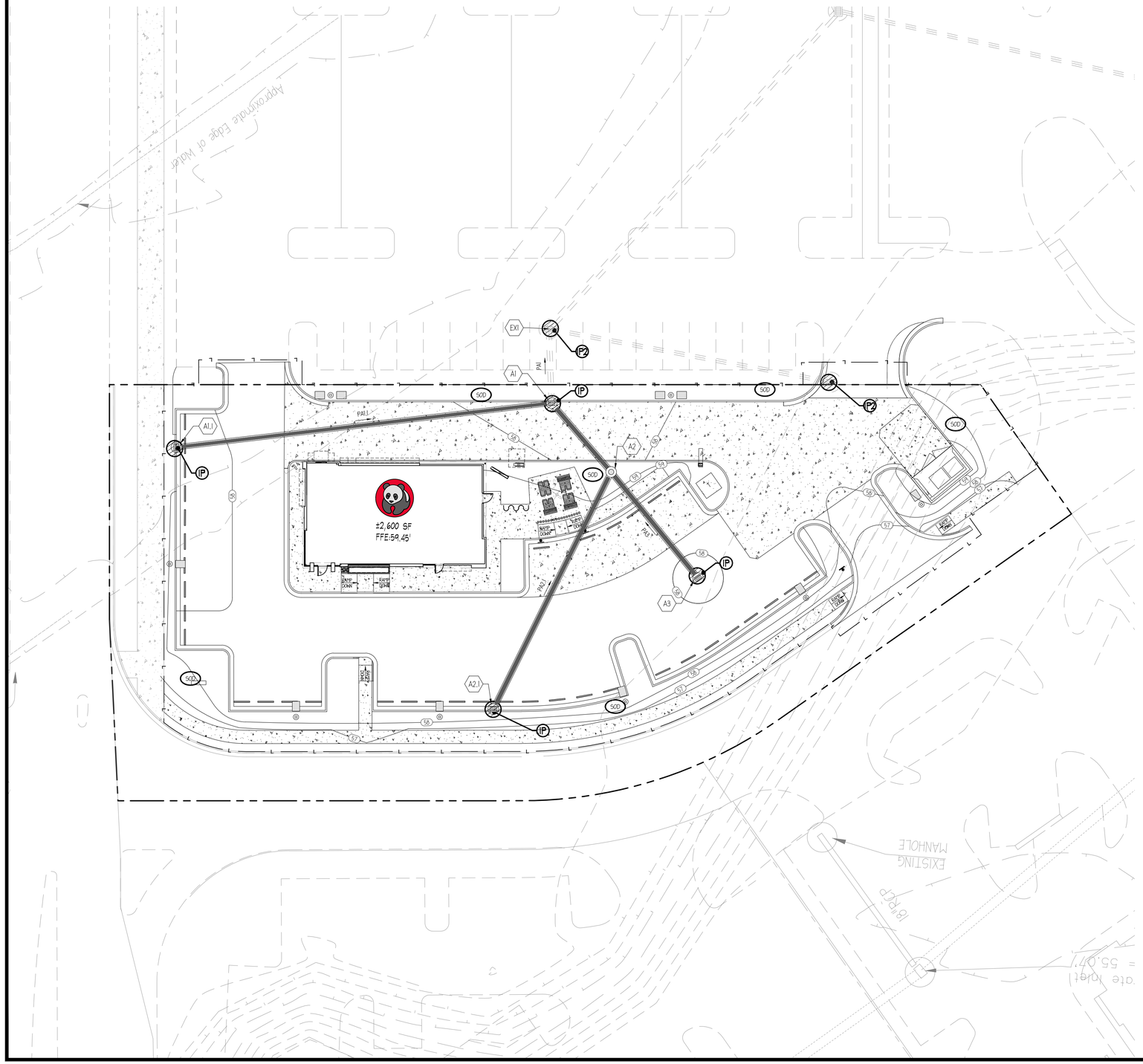

EROSION CONTROL LEGEND

ESPC BMP	LINETYPE/SYMBOL	REFERENCE
CONSTRUCTION EXIT		SHEET C06.3
SF SEDIMENT FENCE		SHEET C06.3
IP INLET PROTECTION		SHEET C06.5
OP OUTLET PROTECTION		NOT APPLICABLE
TS TEMPORARY SEEDING	TS	SHEET C06.4
PS PERMANENT SEEDING	PS	SHEET C06.4
TREE PROTECTION FENCE	TPF	SHEET L01.1
LIMITS OF CONSTRUCTION	L	

SEE EXISTING CONDITIONS/SURVEY AND LANDSCAPE/TREE PROTECTION PLANS FOR LEGENDS SPECIFIC TO THOSE SHEETS

LOCATION MAP

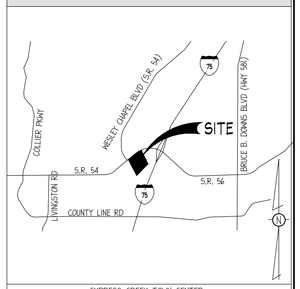

CYPRESS CREEK TOWN CENTER
N.T.S.

ESPC NOTES

GENERAL

1. EROSION CONTROL MEASURES SHALL BE MAINTAINED AT ALL TIMES. IF FULL IMPLEMENTATION OF THE APPROVED PLAN DOES NOT PROVIDE FOR EFFECTIVE EROSION CONTROL, ADDITIONAL EROSION CONTROL MEASURES AND PRACTICES SHALL BE IMPLEMENTED TO CONTROL OR TREAT THE SEDIMENT SOURCE AT THE EXPENSE OF THE CONTRACTOR.
2. SEE GRADING & DRAINAGE NOTES.

SLOPES AND DISTURBED AREA STABILIZATION

1. CONCENTRATED FLOW AREAS AND ALL SLOPES 2H:1V OR STEEPER SHALL BE STABILIZED WITH THE APPROPRIATE EROSION CONTROL MATTING OR BLANKET.
2. ALL CUT AND FILL SLOPES MUST BE SURFACE ROUGHENED AND VEGETATED WITHIN (7) DAYS OF THEIR CONSTRUCTION.
3. ALL DISTURBED AREAS SHALL BE GRASSED AS SOON AS CONSTRUCTION PHASES PERMIT. NO EXPOSED GRADE WILL BE LEFT UNSTABILIZED FOR MORE THAN 7 DAYS.
4. PERMANENT GRASSING AND LANDSCAPING OF DISTURBED AREAS SHALL BE COMPLETED AS QUICKLY AS POSSIBLE. TEMPORARY STABILIZATION BY MULCHING AND/OR TEMPORARY SEEDING WILL BE REQUIRED IN THE EVENT OF PROJECT DELAYS.
5. TYPE 'C' SILT BARRIERS SHALL BE PLACED AT THE TOE OF ALL FILL SLOPES.

DRAINAGE

1. ALL DRAINAGE STRUCTURES SHALL BE EROSION PROOFED.
2. LENGTH OF RIP-RAP PADS AT PIPE OUTLETS SHALL BE A MINIMUM LENGTH OF (4) SIX TIMES THE DIAMETER OF THE PIPE IN FEET.
3. A 25' UNDISTURBED VEGETATIVE STREAM BUFFER ADJACENT TO ALL RUNNING STREAMS AND CREEKS WILL BE LEFT UNDISTURBED AND MAINTAINED THROUGH ALL PHASES OF CONSTRUCTION. REFER TO PLANS FOR EXACT LOCATIONS.

TREE PROTECTION

1. ALL BUFFERS AND TREE SAVE AREAS SHALL BE CLEARLY IDENTIFIED WITH FLAGGING AND/OR FENCING PRIOR TO COMMENCEMENT OF ANY LAND DISTURBANCE.
2. ALL TREE PROTECTION DEVICES SHALL BE INSTALLED PRIOR TO START OF LAND DISTURBANCE AND MAINTAINED UNTIL FINAL LANDSCAPING IS INSTALLED.
3. NO PARKING, STORAGE, OR OTHER CONSTRUCTION SITE ACTIVITIES ARE TO OCCUR WITHIN TREE PROTECTION AREAS.

MAINTENANCE AND INSPECTIONS

1. SEDIMENT AND EROSION CONTROL MEASURES AND PRACTICES SHALL BE INSPECTED DAILY.
2. SEDIMENT STORAGE MAINTENANCE INDICATORS MUST BE INSTALLED IN SEDIMENT STORAGE STRUCTURES, INDICATING THE 1/3 FULL VOLUME.
3. SEDIMENT CONTROL DEVICES MUST BE INSPECTED DAILY AND CHECKED AFTER EACH STORM EVENT AND CLEANED OR REPLACED WHEN THEY REACH 1/3 OF DESIGN CAPACITY.
4. ALL TREE PROTECTION FENCING TO BE INSPECTED DAILY AND REPLACED OR REPAIRED AS NEEDED.
5. MAINTENANCE OF ALL SOIL AND SEDIMENTATION CONTROL MEASURES AND PRACTICES, WHETHER TEMPORARY OR PERMANENT, SHALL BE AT ALL TIMES THE RESPONSIBILITY OF THE CONTRACTOR.

CONTRACTOR SHALL PROTECT ALL ITEMS OUTSIDE LIMITS OF CONSTRUCTION UNLESS OTHERWISE NOTED IN THE CONSTRUCTION PLANS OR SPECIFICATIONS.

CONTRACTOR SHALL FIELD VERIFY ALL EXISTING UTILITIES (LOCATIONS AND ELEVATIONS) PRIOR TO STARTING CONSTRUCTION AND ALERT ENGINEER TO ANY DISCREPANCIES IMMEDIATELY.

24-HOUR CONTACT:
MS. JANICE MORRISS
626.372.8292

Sunshine 811
Always call 811 before you dig.

GRAPHIC SCALE (in feet): 1" = 20'
10' 0' 20' 40'
N

GRIMAIL CRAWFORD, INC.
ENGINEERING · PLANNING · GIS
3650 MANSELL ROAD
SUITE 495
ALPHARETTA, GA 30022
770.437.8850 844.833.6661 FAX
www.gc-inc.com

PANDA EXPRESS
CYPRESS CREEK TOWN CENTER
GRAND CYPRESS DRIVE
WESLEY CHAPEL, FLORIDA

PANDA EXPRESS · CHINESE KITCHEN

PLANS FOR:

CLIENT:
PANDA RESTAURANT GROUP, INC.
1683 WALNUT GROVE AVE
ROSEMEAD, CA 91770
PHONE: (626) 372-8119

REVISION HISTORY

--/--/----	--/--/----
--/--/----	--/--/----
--/--/----	--/--/----
--/--/----	--/--/----
--/--/----	--/--/----
--/--/----	--/--/----
--/--/----	--/--/----

THE CIVIL ENGINEER REGULARLY UPDATES ELECTRONIC FILES DURING THE DEVELOPMENT OF A PROJECT. AS A RESULT, THE DATA INCLUDED IN ANY CAD FILE OR DRAWING PRIOR TO ITS FINAL RELEASE DOES NOT NECESSARILY REFLECT THE COMPLETE SCOPE OR CONTENT AS DEFINED IN THE CONTRACT. THE CONTENTS IN THESE FILES MAY THEREFORE BE PRELIMINARY, INCOMPLETE WORK IN PROGRESS, AND SUBJECT TO CHANGE. FURTHERMORE, THE INFORMATION CONTAINED HEREIN IS THE EXCLUSIVE PROPERTY OF THE CIVIL ENGINEER. THE ORIGINAL IDEAS REPRESENTED HERE BY THIS INFORMATION SHALL NOT BE USED, ALTERED, OR REPRODUCED IN ANY MANNER WITHOUT THE EXPRESSED WRITTEN CONSENT OF THE CIVIL ENGINEER. THESE PLANS ARE SUBJECT TO FEDERAL COPYRIGHT LAWS. ANY USE OF SAME WITHOUT EXPRESSED WRITTEN PERMISSION OF THE CIVIL ENGINEER IS PROHIBITED.

GCI PROJ #	140283
DWG NAME	140283 C06.DWG
ISSUE DATE	10/07/15
GCI PROJ MGR	JMP

ESPC PLAN
PHASE III

C06.2
SHEET NUMBER

ISSUED FOR PERMITTING

4.06 SILT FENCE
(ES BMP 1.06)

Definition

A temporary sediment barrier consisting of a filter fabric stretched across and attached to supporting posts and entrenched. There are two types. The silt fence is a temporary linear filter barrier constructed of synthetic filter fabric, posts, and, depending upon the strength of the fabric used, wire fence for support. The filter barrier is constructed of stakes and burlap or synthetic filter fabric.

Purposes

1. To intercept and detain small amounts of sediment from disturbed areas during construction operations.
2. To decrease the velocity of sheet flows and low-to-moderate level channel flows.

Conditions When Practice Applies

1. Below disturbed areas where erosion would occur in the form of sheet and rill erosion.
2. Where the size of the drainage area is no more than 1/4 acre per 100 feet (1.3 ha /100 m) of silt fence length; the maximum slope length behind the barrier is 100 feet (30 m); and the maximum gradient behind the barrier is 50 percent (2:1).
3. In minor swales or ditch lines where the maximum contributing drainage area is no greater than 2 acres (0.8 ha).
4. Under no circumstances should silt fences be constructed in live streams or in swales or ditch lines where flows are likely to exceed one cubic foot per second (cfs)(0.03 m^3 / sec.). See Design Criteria for further clarification.

Planning Considerations

Silt fences can trap a much higher percentage of suspended sediments than can straw bales and may be preferable to straw barriers in many cases. While the failure rate of silt fences is lower than that of straw barriers, this failure rate is still due mainly to improper installation. The most effective application is to install two parallel silt fences spaced a minimum of three feet apart. The installation and maintenance methods outlined here can improve performance.

Filter barriers are inexpensive structures composed of burlap or standard weight synthetic filter fabric stapled to wooden stakes. Flow rates through burlap filter barriers are slightly slower and filtering efficiency is significantly higher than for straw bale barriers.

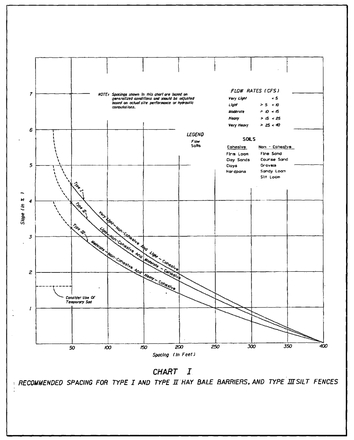

Plate 4.06a FDOT Standard Index 102, Chart 1
Source: FDOT Roadway and Traffic Design Standards

Silt fences composed of a wire support fence and an attached synthetic filter fabric slow the flow rate significantly but have a higher filtering efficiency than burlap. Both woven and non-woven synthetic fabrics are commercially available. The woven fabrics generally display higher strength than the non-woven fabrics. When tested under acid and alkaline water conditions, most of the woven fabrics increase in strength. There are a variety of reactions among the non-woven fabrics. The same is true of testing under extensive ultraviolet radiation. Permeability rates vary regardless of fabric type. While all of the fabrics demonstrate very high filtering efficiencies for sandy sediments, there is considerable variation among both woven and non-woven fabrics when filtering the finer silt and clay particles.

Design Criteria

1. No formal design is required for many small projects and for minor and incidental applications. For channel flow applications refer to FDOT Standard Index 102, Chart 1 (Plate 4.06a) for guidance on recommended spacing.
2. Filter barriers shall have an expected usable life of 3 months. They are applicable in ditch lines, around drop inlets, and at temporary locations where continuous construction changes the earth contour and runoff characteristics and where low or moderate flows (not exceeding 1 cfs) (0.03 m^3 / sec.) are expected.
3. Silt fences, because they have much lower permeability than burlap filter barriers, have their applicability limited to situations in which only sheet or overland flows are expected. They normally cannot filter the volumes of water generated by channel flows, and many fabrics do not have sufficient structural strength to support the weight of water ponded behind the fence line. Their expected usable life is 6 months.

Construction Specifications

Materials

1. Synthetic filter fabric shall be a pervious sheet of propylene, nylon, polyester, or polyethylene yarn. Synthetic filter fabric shall contain ultraviolet ray inhibitors and stabilizers to provide a minimum of 6 months of expected usable construction life at a temperature range of 0° F to 120° F (-17C to 49C).
2. Burlap shall be 10 ounces per square yard (340 g/m^2) fabric.
3. Posts for silt fences shall be either 4 inch (10 cm) diameter wood, or 1.33 pounds per linear foot (2 kg/m) steel with a minimum length of 5 feet (1.5 m). Steel posts shall have projections for fastening wire to them.
4. Stakes for filter barriers shall be 1" x 2" (2.5 x 5 cm) wood (preferred), or equivalent metal with a minimum length of 3 feet (90 cm).

SEDIMENT FENCE NTS

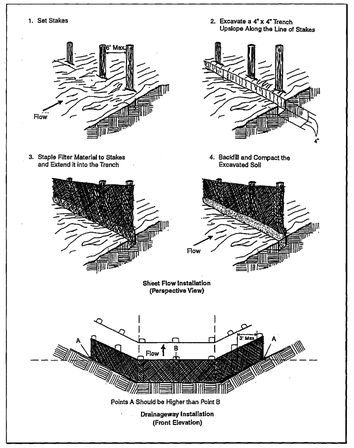

Plate 4.06b Construction of a Filter Barrier
Source: NRCS

5. Wire fence reinforcement for silt fences using standard strength filter cloth shall be a minimum of 36 inches (90 cm) in height, a minimum of 14 gauge and shall have a maximum mesh spacing of 6 inches (15 cm).

Sheet Flow Applications: Filter Barrier

This sediment barrier may be constructed using burlap or standard strength synthetic filter fabric. It is designed for low or moderate flows not exceeding 1 cfs. (0.03 m^3 / sec.). (See Plate 4.06b)

1. The height of a filter barrier shall be a minimum of 15 inches (38 cm) and shall not exceed 18 inches (45 cm).
2. Burlap or standard strength synthetic filter fabric shall be purchased in a continuous roll and cut to the length of the barrier to avoid the use of joints (and thus improve the strength and efficiency of the barrier).
3. The stakes shall be spaced a maximum of 3 feet (90 cm) apart at the barrier location and driven securely into the ground a minimum of 8 inches (20 cm).
4. A trench shall be excavated approximately 4 inches (10 cm) wide and 4 inches (10 cm) deep along the line of stakes and upslope from the barrier.
5. The filter material shall be stapled to the wooden stakes, and 8 inches (20 cm) of the fabric shall be extended into the trench. Heavy duty wire staples at least 1/2 inch (13 mm) long, hog rings, or tie wire shall be used. Filter material shall not be stapled to existing trees.
6. The trench shall be backfilled and the soil compacted over the filter material.
7. Filter barriers shall be removed when they have served their useful purpose, but not before the upslope area has been permanently stabilized.

Sheet Flow Application: Silt Fence

This sediment barrier uses standard strength or extra strength synthetic filter fabrics. It is designed for situations in which only sheet or overland flows are expected. (See Plate 4.06d)

1. The height of a silt fence shall not exceed 36 inches (90 cm). Higher fences may impound volumes of water sufficient to cause failure of the structure.
2. The filter fabric shall be purchased in a continuous roll cut to the length of the barrier to avoid the use of joints. When joints are necessary, filter cloth shall be spliced as described in item No. 8 below.

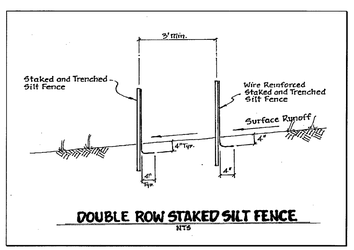

Plate 4.06c Double Row Staked Silt Fence
Source: Reedy Creek Improvement District

3. Posts shall be spaced a maximum of 10 feet (3 m) apart at the barrier location and driven securely into the ground a minimum of 12 inches (30 cm). When extra strength fabric is used without the wire support fence, post spacing shall not exceed 6 feet (1.8 m).
4. A trench shall be excavated approximately 4 inches (10 cm) wide and 4 inches (10 cm) deep along the line of posts and upslope from the barrier.
5. When standard strength filter fabric is used, a wire mesh support fence shall be fastened securely to the upslope side of the posts using heavy duty wire staples at least 1 inch (25 mm) long, tie wires, or hog rings. The wire shall extend into the trench a minimum of 2 inches (5 cm) and shall not extend more than 36 inches (90 cm) above the original ground surface.
6. The standard strength filter fabric shall be stapled or wired to the fence, and 8 inches (20 cm) of the fabric shall be extended into the trench. The fabric shall not extend more than 36 inches (90 cm) above the original ground surface.
7. When extra strength filter fabric and closer post spacing are used, the wire mesh support fence may be eliminated. In such a case, the filter fabric is stapled or wired directly to the posts with all other provisions of Item No. 6 applying.
8. When attaching two silt fences together, place the end post of the second fence inside the end post of the first fence. Rotate both posts at least 180 degrees on a clockwise direction to create a tight seal with the filter fabric. Drive both posts into the ground and bury the flap. (See Plate 4.06g)
9. The trench shall be backfilled and the soil compacted over the filter fabric.
10. The most effective application consists of a double row of silt fences spaced a minimum of three feet apart. The three foot separation is so that if the first row collapses it will not fall on the second row. Wire or synthetic mesh is may be used to reinforce the first row. (See Plate 4.06c)
11. When used to control sediments from a steep slope, silt fences should be placed away from the toe of the slope for increased holding capacity. (See Plate 4.06f)
12. Silt fences shall be removed when they have served their useful purpose, but not before the upslope area has been permanently stabilized.

Channel Flow Applications

1. If a filter barrier is to be constructed across a ditch line or swale, the barrier shall of sufficient length such that the bottom of the end sections of fence are higher in elevation than the top of the center section to eliminate end flow. The plan configuration shall resemble an arc or horseshoe with the ends oriented upslope. (See Plate 4.06b).
2. Use FDOT Standard Index 102, Chart 1(Plate 4.06a) as a guide for spacing.
3. The remaining steps for installing a filter barrier for sheet flow applications apply here.

Maintenance

1. Silt fences and filter barriers shall be inspected immediately after each rainfall and at least daily during prolonged rainfall. Any required repairs shall be made immediately.
2. Should the fabric on a silt fence or filter barrier decompose or become ineffective before the end of the expected usable life and the barrier still be necessary, the fabric shall be replaced promptly.
3. Sediment deposits should be removed after each storm event. They must be removed when deposits reach approximately one-half the height of the barrier.

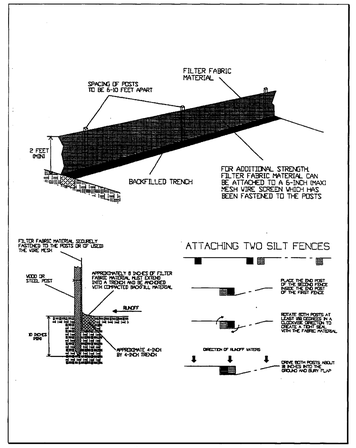

Plate 4.06d Installing a Filter Fabric Silt Fence
Source: HydroDynamics, Inc.

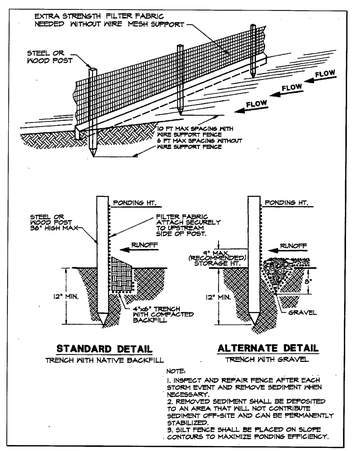

Plate 4.06e Silt Fence
Source: Erosion Draw

4. Any sediment deposits remaining in place after the silt fence or filter barrier is no longer required shall be dressed to conform with the existing grade, prepared, and seeded.

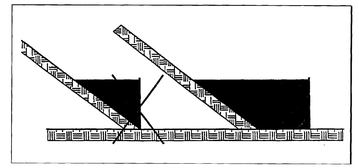

Plate 4.06f Proper Placement of a Silt Fence at the Toe of a Slope
Source: HydroDynamics, Inc

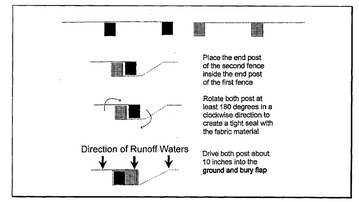

Plate 4.06g Attaching Two Silt Fences
Source: HydroDynamics,Inc.

4.03 TEMPORARY GRAVEL CONSTRUCTION ENTRANCE & EXIT
(ES BMP 1.01)

Definition

A stone stabilized pad located at points of vehicular ingress and egress on a construction site.

Purpose

To stabilize entrances to the construction site and reduce the amount of sediment transported onto public roads by motor vehicles or runoff.

Conditions Where Practice Applies

Wherever traffic will be leaving a construction site and moving directly onto a public road or other paved area.

Planning Considerations

Construction entrances provide an area where mud can be removed from construction vehicle tires before they enter a public road. If the action of the vehicle traveling over the gravel pad is not sufficient to remove most of the mud, then the tires must be washed before the vehicle enters a public road. If washing is used, provisions must be made to intercept the wash water and trap the sediment before it is carried off-site. Construction entrances should be used in conjunction with the stabilization of construction roads to reduce the amount of mud picked up by construction vehicles.

Design Criteria

Aggregate Size

FDOT No. 1 Coarse Aggregate (1.5 - 3.5 inch stone)(4 - 9 cm) should be used. Wood chips may be used for single family residential construction, provided that they can be prevented from floating away in a storm.

Entrance Dimensions

The aggregate layer must be at least 6 inches (15 cm) thick. It must extend the full width of the vehicular ingress and egress area. The length of the entrance must be at least 50 feet (20 m). The entrance must widen at its connection to the roadway in order to accommodate the turning radius of large trucks. (See Plate 4.03a)

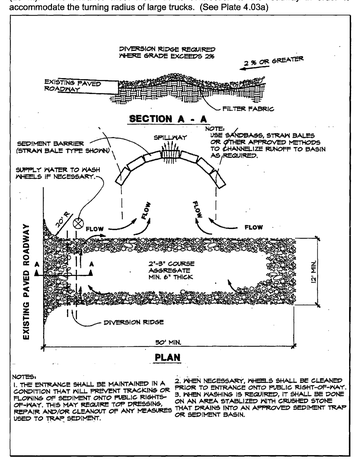

Plate 4.03a Temporary Gravel Construction Entrance
Source: Erosion Draw

CONSTRUCTION EXIT NTS

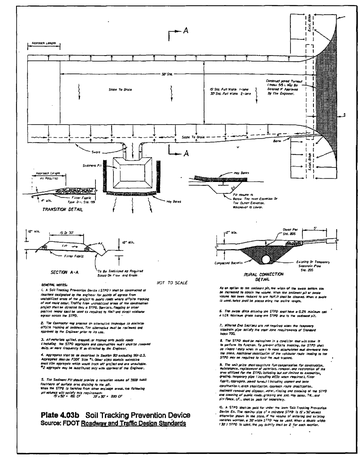

Plate 4.03b Soil Tracking Prevention Device
Source: FDOT Roadway and Traffic Design Standards

Plate 4.03b Soil Tracking Prevention Device
Source: FDOT Roadway and Traffic Design Standards

Washing

If conditions on the site are such that most of the mud is not removed by the vehicles traveling over the gravel, then the tires of the vehicles must be washed before entering a public road. Wash water must be carried away from the entrance to a settling area to remove sediment (See Plate 4.03b). A wash rack may also be used to make washing more convenient and effective (See Plate 4.03c).

Location

The entrance should be located to provide for maximum utility by all construction vehicles.

Construction Specifications

The area of the entrance should be cleared of all vegetation, roots, and other objectionable material. A geotextile should be laid down to improve stability and simplify maintenance. The gravel shall then be placed over the geotextile to the specified dimensions.

Any drainage facilities required because of washing should be constructed according to approved specifications. If wash racks are used, they should be installed according to manufacturer's specifications.

Maintenance

The entrance shall be maintained in a condition which will prevent tracking or flow of mud onto public rights-of-way. This may require periodic top dressing with 2-inch (5 cm) stone, as conditions demand, and repair and/or clean out of any structures used to trap sediments. All materials spilled, dropped, washed, or tracked from vehicles onto roadways or into storm drains must be removed immediately. Look for signs of trucks and trailered equipment "cutting corners" where the gravel meets the roadway. Sweep the paved road daily for sediments and stones.

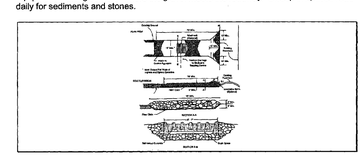

Plate 4.03c Construction Entrance with Wash Rack
Source: 1983 Maryland Standards for Soil Erosion and Sediment Control

GRIMAIL CRAWFORD, INC.
ENGINEERING · PLANNING · GIS
3650 MANSELL ROAD
SUITE 495
ALPHARETTA, GA 30022
770.437.8850 844.833.6441 FAX
www.gc-inc.com

PANDA EXPRESS
CYPRESS CREEK TOWN CENTER
GRAND CYPRESS DRIVE
WESLEY CHAPEL, FLORIDA

PANDA EXPRESS · CHINESE KITCHEN

PLANS FOR:

CLIENT:
PANDA RESTAURANT GROUP, INC.
1683 WALNUT GROVE AVE
ROSEMEAD, CA 91770
PHONE: (626) 372-8119

REVISION HISTORY

THE CIVIL ENGINEER REGULARLY UPDATES ELECTRONIC FILES DURING THE DEVELOPMENT OF A PROJECT. AS A RESULT, THE DATA INCLUDED IN ANY CAD FILE OR DRAWING PRIOR TO ITS FINAL RELEASE DOES NOT NECESSARILY REFLECT THE COMPLETE SCOPE OR CONTENT AS DEFINED IN THE CONTRACT. THE CONTENTS IN THESE FILES MAY THEREFORE BE PRELIMINARY, INCOMPLETE WORK IN PROGRESS, AND SUBJECT TO CHANGE. FURTHERMORE, THE INFORMATION CONTAINED HEREIN IS THE EXCLUSIVE PROPERTY OF THE CIVIL ENGINEER. THE ORIGINAL IDEAS REPRESENTED HERE BY THIS INFORMATION SHALL NOT BE USED, ALTERED, OR REPRODUCED IN ANY MANNER WITHOUT THE EXPRESSED WRITTEN CONSENT OF THE CIVIL ENGINEER. THESE PLANS ARE SUBJECT TO FEDERAL COPYRIGHT LAWS. ANY USE OF SAME WITHOUT EXPRESSED WRITTEN PERMISSION OF THE CIVIL ENGINEER IS PROHIBITED.

GCI PROJ #	140283
DWG NAME	140283 C06.DWG
ISSUE DATE	10/07/15
GCI PROJ MGR	JMP

ESPC DETAILS I

C06.3
SHEET NUMBER

ISSUED FOR PERMITTING

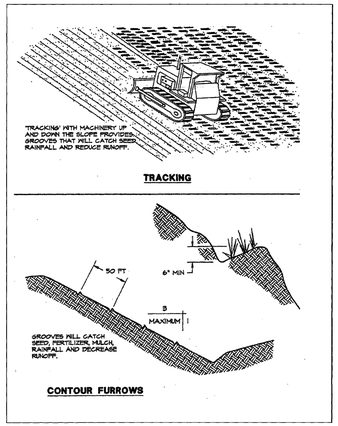

Plate 6.60d Roughening with Tracked Machinery
Source: Erosion Draw

6.65 TEMPORARY SEEDING (ES BMP 1. 65)

Definition

The establishment of a temporary vegetative cover on disturbed areas by seeding with appropriate rapidly growing annual plants.

Purposes

1. To reduce erosion and sedimentation by stabilizing disturbed areas that will not be brought to final grade for a 30days or more.

2. To reduce problems associated with mud and dust production from bare soil surfaces during construction.

Conditions Where Practice Applies

Where exposed soil surfaces are not to be fine graded for periods from 30 days or more. Such areas include denuded areas, soil stockpiles, dikes, dams, sides of sediment basins, temporary roadbanks, etc.

Specifications

Prior to seeding, install necessary erosion control practices such as dikes, waterways, and basins.

Plant Selection

Select plants appropriate to the season, region, and site conditions. Consult with your local Agricultural Extension agent, county, FDEP, WMD, or FDOT office, or Table 1.65a of The Florida Development Manual.

Seedbed Preparation

To control erosion on bare soil surfaces, plants must be able to germinate and grow. Seedbed preparation is essential. A soil test should be taken to determine liming and fertilization requirements. In the absence of a soil test the following guidelines should be followed:

1. Liming: Where soils are known to be highly acid (pH 6.0 and lower), lime should be applied at the rate of two tons of pulverized agricultural limestone per acre.

2. Fertilizer: Shall be applied as 450 lbs./acre of 10-20-20 (10 lbs./ 1,000 sq. ft.)(504 kg/ha) or equivalent. Lime and fertilizer shall be incorporated into the top 2 to 4 inches (5 to 10 cm) of the soil.

3. Surface Roughening: If the area has been recently loosened or disturbed, no further roughening is required. When the area is compacted, crusted, or hardened, the soil surface shall be loosened by discing, raking, harrowing, or other acceptable means. See SURFACE ROUGHENING - Section 6.60 (ES BMP 1.60).

4. Tracking: Tracking with bulldozer cleats is most effective on sandy soils. This practice often causes undue compaction of the soil surface, especially in clayey soils, and does not aid plant growth as effectively as other methods of surface roughening.

Seeding

Seed shall be evenly applied with a cyclone seeder, drill, cultipacker seeder or hydroseeder. Small grains shall be planted no more than one inch deep. Grasses and legumes shall be planted no more than 1/4 inch (6 mm) deep.

Mulching

1. Mulching should usually be used to reduce damage from water runoff or wind erosion, and to improve moisture conditions for seedlings. Mulching without seeding should be considered for very short term protection. The use of mulch is a judgment decision based on time of seeding and conditions of individual sites. When used, mulch shall be applied according to MULCHING - Section 6.75 (ES BMP 1.75.

2. Seedings made on slopes in excess of 3:1, or on adverse soil conditions, or during excessively hot or dry weather, shall be mulched according to MULCHING - Section 6.75 (ES BMP 1.75).

3. Seedings made during optimum spring and summer seeding dates, with favorable soil and site conditions, may not require mulch.

Re-seeding

Areas which fail to establish vegetative cover adequate to prevent rill erosion will be filled in with proper topsoil and re-seeded as soon as such areas are identified.

TS TEMPORARY SEEDING NTS

6.66 PERMANENT SEEDING (ES BMP 1.66)

Definition

The establishment of perennial vegetative cover on disturbed areas by planting seed.

Purposes

1. To reduce erosion and decrease sediment yield from disturbed areas.

2. To permanently stabilize disturbed areas in a manner that is economical, adaptable to site conditions, and allows selection of the most appropriate plant materials.

Conditions Where Practice Applies

1. Disturbed areas where permanent, long-lived vegetative cover is needed to stabilize the soil.

2. Rough-graded areas which will not be brought to final grade for a year or more.

Specifications

Selection of Plant Materials

1. Selection of plant materials is based on climate, topography, soils, land use, and planting season. To determine which plant materials are best adapted to a specific site, use Tables 1.66b and 1.66c of The Florida Development Manual which describe plant characteristics and list recommended varieties.

2. Appropriate seeding mixtures for various site conditions in Florida are given in Table 1.66a of The Florida Development Manual. These mixtures are designed for general use, and are known to perform well on the sites described. Adhere to these mixtures whenever feasible. Check Tables 1.66b and 1.66c for recommended varieties.

Seedbed Requirements

Vegetation should not be established on slopes that are unsuitable due to inappropriate soil texture, poor internal structure or internal drainage, volume of overland flow, or excessive steepness, until measures have been taken to correct these problems.

To maintain a good stand of vegetation, the soil must meet certain minimum requirements as a growth medium. The existing soil must have these criteria:

1. Enough fine-grained material to maintain adequate moisture and nutrient supply.

2. Sufficient pore space to permit root penetration. A bulk density of 1.2 to 1.5 indicates that sufficient pore space is present. A fine granular or crumb-like structure is also favorable.

3. Sufficient depth of soil to provide an adequate root zone. The depth to rock or impermeable layers such as hardpans shall be 12 inches (30 cm) or more, except on slopes steeper than 2:1 where the addition of soil is not feasible.

4. A favorable pH range for plant growth. If the soil is so acid that a pH range of 6.0 - 7.0 cannot be attained by addition of pH-modifying materials, then the soil is considered an unsuitable environment for plant roots.

5. Freedom from toxic amounts of materials harmful to plant growth.

6. Freedom from excessive quantities of roots, branches, large stones, large clods of earth, or trash of any kind. Clods and stones may be left on slopes steeper than 3:1 if they are to be hydroseeded.

If any of the above criteria cannot be met, i.e., if the existing soil is too coarse, dense, shallow, acid, or contaminated to foster vegetation, then topsoil should be applied in accordance with TOPSOILING - Section 6.61 (ES BMP 1.61).

Necessary mechanical erosion and sediment control practices ***will be installed prior to seeding***. Grading will be carried out according to the approved plan.

Surfaces will be roughened in accordance with SURFACE ROUGHENING - Section 6.60 (ES BMP 1.60).

Soil Conditioners

In order to modify the texture, structure, or drainage characteristics of a soil, the following materials may be added to the soil:

1. Peat shall be sphagnum moss peat, hypnum moss peat, reed-sedge peat or peat humus, from fresh-water sources. Peat shall be shredded and conditioned in storage piles for at least six months after excavation.

2. Sand shall be clean and free of toxic materials.

3. Vermiculite shall be horizontal grade and free of toxic substances.

4. Rotted manure shall be stable or cattle manure not containing undue amounts of straw or other bedding materials or toxic chemicals.

5. Thoroughly rotted sawdust shall be 6 lbs. of nitrogen added to each cubic yard (3.5 kg/m^3) and shall be free of stones, sticks, and toxic substances.

6. Where local ordinances permit, treated sewage sludge may be used in accordance with local, state, and federal regulations.

Lime and Fertilizer

Lime and fertilizer needs should be determined by soil tests. Soil tests may be performed by the Cooperative Extension Service Soil Testing Laboratory at the U.F., or by a reputable commercial laboratory. Information concerning the State Soil Testing Laboratory is available from county extension agents. Under unusual conditions where it is not possible to obtain a soil test, the following soil amendments will be applied:

LIME: 2 tons/acre finely ground agricultural or dolomitic limestone (90 lbs./1000 ft^2)(4.48 t/ha)

FERTILIZER: Mixed grasses and legumes: 1000 lbs./acre 5-20-10 (25 lbs./1000 ft^2)(1.12 t/ha)

Legume stands only: 1000 lbs./acre 5-20-10 (25 lbs./1000 ft^2)(1.12 t/ha)

Grass stands only: 1000 lbs./acre 5-20-10 (1.12 t/ha) and 300 lbs.of38-0-0 in spring (7 lbs./1000 ft^2)(336 kg/ha)

1000 lbs./acre 10-20-10 (1.12 t/ha) and 300 lbs. of 38-0-0 in fall (7 lbs./1000 ft^2)(336 kg/ha)

Other fertilizer formulations may be used, provided they can supply the same amounts and proportions of plant nutrients.

Incorporation - Lime and fertilizer shall be incorporated into the top 4 - 6 inches (10 - 15 cm) of the soil by discing or other means. When applying lime and fertilizer with a hydroseeder, apply to a rough, loose surface.

Seeding

1. Certified seed should be used for all permanent seeding whenever possible.

2. Legume seed - Legume seed should be inoculated with the inoculant appropriate to the species. Seed of lespendezas, crown vetch, and clovers should be scarified to promote uniform germination.

3. Apply seed uniformly with a cyclone seeder, drill, cultipacker seeder, or hydroseeder on a firm, friable seedbed. Maximum seeding depth should be 1/4 inch.

4. Hydroseeding - To avoid seed damage, it is recommended that if a machinery breakdown of 30 minutes to 2 hours occurs, 50% more seed be added to the tank, based on the proportion of the slurry remaining in the tank. Beyond 2 hours, a full rate of new seed may be necessary.

   Often hydroseeding contractors prefer not to apply lime in their rigs as it is abrasive. In inaccessible areas, lime may have to be applied in pelletized or liquid form, separately. Rates of wood fiber should be at least 2000 lbs. per acre (2.24 t/ha). Surface roughening is particularly important when hydroseeding, as a roughened slope will provide some natural coverage of lime, fertilizer, and seed.

5. Legume inoculants should be used by the date indicated on the container. When dry seeding use four times the manufacturer's recommended rate and use ten times the recommended rate of inoculant when hydroseeding.

PS PERMANENT SEEDING NTS

EROSION CONTROL ACTIVITY SCHEDULE

ACTIVITY	2014 MONTH 1	MONTH 2	MONTH 3	MONTH 4
START CONSTRUCTION	X			
INSTALLATION OF EROSION CONTROL DEVICES	▬			
CLEARING AND GRUBBING	▬			
GRADING	▬	▬		
TEMPORARY VEGETATION AT 14 DAY INTERVALS		▬	▬	
STORM SEWER SYSTEM INSTALLATION	▬			
PAVING				▬
BUILDING PAD CONSTRUCTION		▬	▬	
INSTALLATION OF UTILITIES		▬	▬	
PERMANENT VEGETATION AT 30 DAY INTERVALS			▬	▬
MAINTENANCE OF EROSION CONTROL DEVICES		▬	▬	▬
REMOVE EROSION CONTROL DEVICES				▬
TREE PROTECTION FENCING	▬	▬	▬	▬
END OF CONSTRUCTION				

SCHEDULE IS REPRESENTATIVE FOR OVERALL SITE CONSTRUCTION. THE ENGINEER MUST BE NOTIFIED, IF THIS SCHEDULE IS DEVIATED FROM BY THE CONTRACTOR.
ANTICIPATED START DATE: JANUARY 1, 2016
ANTICIPATED COMPLETION DATE: APRIL 30, 2016

GRIMAIL CRAWFORD, INC.
ENGINEERING - PLANNING - GIS
3650 MANSELL ROAD
SUITE 495
ALPHARETTA, GA 30022
770.437.8850 844.833.6661 FAX
www.gc-inc.com

PANDA EXPRESS
CYPRESS CREEK TOWN CENTER
GRAND CYPRESS DRIVE
WESLEY CHAPEL, FLORIDA

PANDA EXPRESS · CHINESE KITCHEN

PLANS FOR:

CLIENT:
PANDA RESTAURANT GROUP, INC.
1683 WALNUT GROVE AVE
ROSEMEAD, CA 91770
PHONE: (626) 372-8119

REVISION HISTORY

--/--/----	--/--/----
--/--/----	--/--/----
--/--/----	--/--/----
--/--/----	--/--/----
--/--/----	--/--/----
--/--/----	--/--/----
--/--/----	--/--/----

THE CIVIL ENGINEER REGULARLY UPDATES ELECTRONIC FILES DURING THE DEVELOPMENT OF A PROJECT. AS A RESULT, THE DATA INCLUDED IN ANY CAD FILE OR DRAWING PRIOR TO ITS FINAL RELEASE DOES NOT NECESSARILY REFLECT THE COMPLETE SCOPE OR CONTENT AS DEFINED IN THE CONTRACT. THE CONTENTS IN THESE FILES MAY THEREFORE BE PRELIMINARY, INCOMPLETE WORK IN PROGRESS, AND SUBJECT TO CHANGE. FURTHERMORE, THE INFORMATION CONTAINED HEREIN IS THE EXCLUSIVE PROPERTY OF THE CIVIL ENGINEER. THE ORIGINAL IDEAS REPRESENTED HERE BY THIS INFORMATION SHALL NOT BE USED, ALTERED, OR REPRODUCED IN ANY MANNER WITHOUT THE EXPRESSED WRITTEN CONSENT OF THE CIVIL ENGINEER. THESE PLANS ARE SUBJECT TO FEDERAL COPYRIGHT LAWS. ANY USE OF SAME WITHOUT EXPRESSED WRITTEN PERMISSION OF THE CIVIL ENGINEER IS PROHIBITED.

GCI PROJ #	140283
DWG NAME	140283 C06.DWG
ISSUE DATE	10/07/15
GCI PROJ MGR	JMP

ESPC DETAILS II

C06.4
SHEET NUMBER

ISSUED FOR PERMITTING

4.08 STORM DRAIN INLET PROTECTION
(ES BMP 1.08)

Definition

A sediment filter or an excavated impounding area around a storm drain drop inlet or curb inlet.

Purpose

To prevent sediment from entering storm water conveyance systems prior to permanent stabilization of the disturbed area.

Condition Where Practice Applies

Where storm drain inlets are to be made operational before permanent stabilization of the disturbed drainage area. Different types of structures are applicable to different conditions (see Plates 4.08a through 4.08h).

Planning Considerations

Storm sewers which are made operational before their drainage area is stabilized can convey large amounts of sediment to receiving waters. In case of extreme sediment loading, the storm sewer itself may clog and lose most of its capacity. To avoid these problems, it is necessary to prevent sediment from entering the system at the inlets.

This section contains several types of inlet filters and traps which have different applications dependent upon site conditions and type of inlet. Other innovative techniques for accomplishing the same purpose are encouraged, but only after specific plans and details are submitted to and approved by the stormwater permitting agency.

Note that these various inlet protection devices are for drainage areas of less than one acre (0.4 ha). Runoff from large disturbed areas should be routed through a TEMPORARY SEDIMENT TRAP - Section 4.25 (ES BMP 1.25).

Design Criteria

1. The drainage area shall be no greater than 1 acre (0.4 ha).
2. The inlet protection device shall be constructed to facilitate clean out and disposal of trapped sediment and to minimize interference with construction activities.
3. The inlet protection devices shall be constructed so that any resultant ponding or stormwater will not cause excessive inconvenience or damage to adjacent areas or structures.
4. Design criteria more specific to each particular inlet protection devices will be found on Plates 4.08a-h.

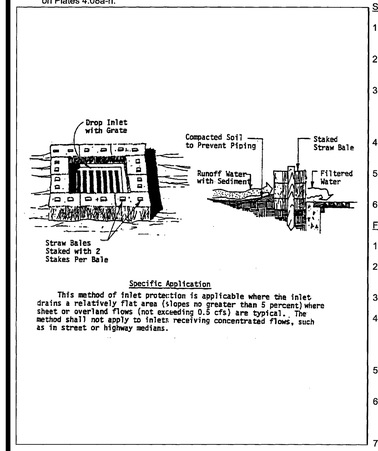

Plate 4.08a Straw Bale Drop Inlet Sediment Filter
Source: Michigan Soil Erosion and Sedimentation Control Guidebook

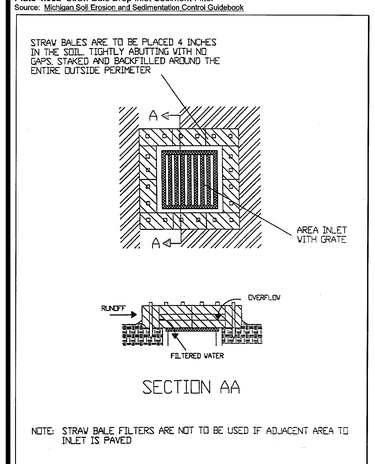

Plate 4.08b Straw Bale Filter for Area Inlet
Source: HydroDynamics, Inc.

Source: Erosion Draw

Construction Specifications

Straw bale drop inlet filter

1. Bales shall be either wire-bound or string-tied with the bindings oriented around the sides rather than over and under the bales.
2. Bales shall be placed lengthwise in a single row surrounding the inlet, with the ends of adjacent bales pressed together. (See Plate 4.08a)
3. The filter barrier shall be entrenched and backfilled. A trench shall be excavated around the inlet the width of a bale to a minimum depth of 4 inches (10 cm). After the bales are staked, the excavated soil shall be backfilled and compacted against the filter barrier. (See Plate 4.08b)
4. Each bale shall be securely anchored and held in place by at least two stakes or rebars (See p. 4-17) driven through the bale.
5. Loose straw should be wedged between bales to prevent water from entering between bales.
6. Gravel may be spread around the bales to improve stability. (See Plate 4.08c)

Fabric drop inlet sediment filter

1. Fabric shall be cut from a continuous roll to avoid joints.
2. Stakes shall be 2" x 4" (5 cm x 10 cm) wood (preferred) or equivalent metal with a minimum length of 3 feet (90 cm). (See Plate 4.08d)
3. Staples shall be of heavy duty wire at least 1/2-inch (13 mm) long.
4. Stakes shall be spaced around the perimeter of the inlet a maximum of 3 feet (90 cm) apart and securely driven into the ground minimum of 8 inches (20 cm). A frame of 2" x 4" (5 cm x 10 cm) wood shall be constructed around the top of the stakes for proper stability.
5. A trench shall be excavated approximately 4 inches (10 cm) wide and 4 inches (10 cm) deep around the outside perimeter of the stakes. (See Plate 4.08e)
6. The burlap shall be stapled to the wooden stakes, and 8 inches (20 cm) of the fabric shall be extended into the trench. The height of the filter barrier shall be a minimum of 15 inches (38 cm) and shall not exceed 18 inches (45 cm).
7. The trench shall be backfilled and the soil compacted over the burlap.

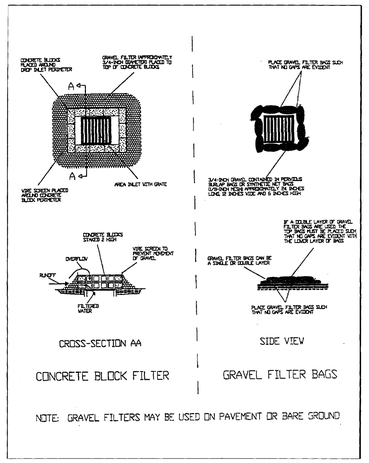

Prefabricated drop inlet external filter (Suntree Isles Grate Inlet Protector)

1. Place the device over the inlet. If the inlet has a grate, the device shall be secured to the grate by means of a long toggle bolt. If the grate is not present, the device shall be bolted directly to the concrete.
2. Sediments shall be removed when they have accumulated to within one foot (30 cm) of the top of the device. The filter fabric elements shall be cleaned or replaced at that time.

NOTE: This segment does not constitute a product endorsement.

Gravel curb inlet sediment filter

1. Hardware cloth or comparable wire mesh with 1/2 inch (13 mm) openings shall be placed over the curb inlet opening so that at least 12 inches (30 cm) of wire extends across the top of the inlet cover and at least 12 inches (30 cm) of wire extends across the concrete gutter from the inlet opening. (See Plate 4.08k)
2. Stone shall be piled against the wire so as to anchor it against the gutter and inlet cover and to cover the inlet opening completely. FDOT No. 1 Coarse Aggregate shall be used.
3. An overflow weir can be constructed of 2" x 4" (5 x 10 cm) boards to lessen ponding from this practice. (See Plate 4.08L)
4. If the stone filter becomes clogged with sediment so that it no longer adequately performs its function, the stone must be pulled away from the block, cleaned and replaced.

Block and gravel curb inlet sediment filter

1. Two concrete blocks shall be placed on their sides abutting the curb at either side of the inlet opening.
2. A 2" x 4" (5 x 10 cm) board shall be cut and placed through the outer holes of each spacer block to help keep the front blocks in place.
3. Concrete blocks shall be placed on their sides across the front of the inlet and abutting the spacer blocks. (See Plate 4.08m)
4. Wire mesh shall be placed over the outside vertical face (webbing) of the concrete blocks to prevent stone from being washed through the holes in the blocks. Hardware cloth with 1/2 inch (13 mm) openings shall be used.
5. FDOT No. 1 Coarse Aggregate shall be piled against the wire to the top of the barrier.

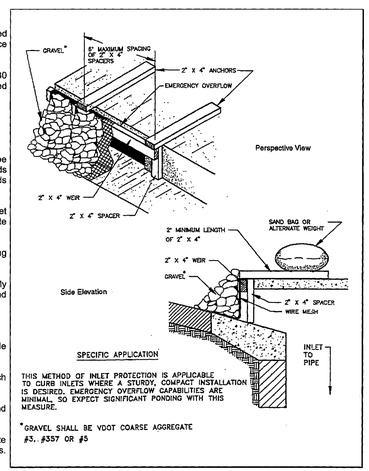

CONTRACTOR SHALL USE DANDY BAG INLET PROTECTION AT ALL GRATE INLETS WHERE AUTOMOBILE TRAFFIC IS EXPECTED.

IP INLET PROTECTION NTS

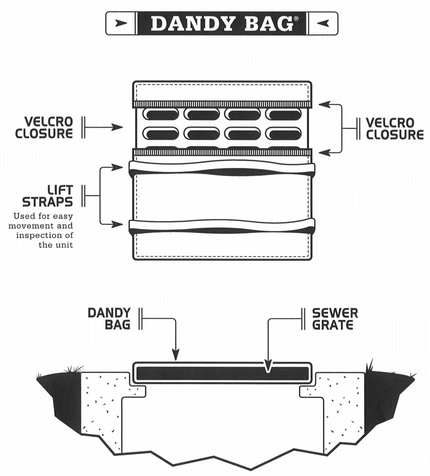

IP2 INLET PROTECTION NTS

DANDY BAG®
INLET PROTECTION SYSTEM GUIDE SPECIFICATION

PRODUCT:

DANDY BAG®

MANUFACTURER:

Dandy Products Inc.
P.O. Box 1980
Westerville, Ohio 43086
Phone: 800-591-2284
Fax: 740-881-2791
E mail dlc@dandyproducts.com
Web www.dandyproducts.com

1.0 **Description:**

1.1 Work covered under this item consists of installing a Dandy Bag® inlet protection system. The purpose is to keep silt, sediment and construction debris out of the storm water system.

2.0 **Material:**

2.1 The Dandy Bag® inlet protection unit shall be a **sewn in the U.S.A.** geotextile fabric unit fitted to the individual grate(s) and completely enclosing the grate(s).

2.2 The Dandy Bag® shall have lifting devises to allow manual inspection of the storm water system.

2.3 The Dandy Bag® unit shall utilize an orange monofilament fabric manufactured in the U.S.A. with the following characteristics:

PROPERTY	TEST METHOD	UNITS	TEST RESULTS
Grab Tensile Strength	ASTM D 4632	lbs	450 X 300
Elongation	ASTM D 4632	%	40% X 25%
Puncture Strength	ASTM D 4833	lbs	130
Mullen Burst Strength	ASTM D 3786	psi	600
Trapezoid Tear Strength	ASTM D 4533	lbs	165 x 150
% Open Area (POA)	COE - 22125-86	%	28
Apparent Opening Size	ASTM D 4751	US Std Sieve	30
Permittivity	ASTM D 4491	sec[1]	3.5
Permeability	ASTM 4491	cm/sec	0.25
Water Flow Rate	ASTM 4491	gal/min/ft^2	250
Ultraviolet Resistance	ASTM D 4355	%	70
Color			Orange[1]

[1]The color orange is a trademark of Dandy Products, Inc.
The property values listed above are effective October 2010 and are subject to change without notice.

1

3.0 **Installation:**

3.1 Place the empty Dandy Bag® over the grate as the grate stands on end.

3.2 For oil and sediment model; to install or replace absorbent, place absorbent pillow in pouch, on the bottom (below-grade side) of the unit.

3.3 Tuck the enclosure flap inside to completely enclose the grate.

3.4 Holding the lifting devises, insert the grate into the inlet being careful not to damage the Dandy Bag® unit.

4.0 **Maintenance:**

4.1 The contractor shall remove all accumulated sediment and debris from surface and vicinity of unit after each rain event or as directed by engineer/inspector. Dispose of unit no longer in use at an appropriate recycling or solid waste facility.

4.2 *For oil and sediment model; remove and replace absorbent when near saturation.*

5.0 **Method of Measurement:**

5.1 The quantity to be paid is for the actual number of Dandy Bag® inlet protection units installed

6.0 **Basis of Payment:**

6.1 The unit price shall include labor, equipment, and materials necessary to complete the work and maintain the Dandy Bag® inlet protection units.

6.2 Payment for the completed work will be made at the contract prices for:

ITEM	UNIT	DESCRIPTION
Dandy Bag®	EA	Inlet Protection Unit (#_____Inlet)

2

GRIMAIL CRAWFORD, INC.
ENGINEERING · PLANNING · GIS
3650 MANSELL ROAD
SUITE 495
ALPHARETTA, GA 30022
770.437.8850 844.833.6661 FAX
www.gc-inc.com

PANDA EXPRESS
CYPRESS CREEK TOWN CENTER
GRAND CYPRESS DRIVE
WESLEY CHAPEL, FLORIDA

PLANS FOR:

CLIENT:
PANDA RESTAURANT GROUP, INC.
1683 WALNUT GROVE AVE
ROSEMEAD, CA 91770
PHONE: (626) 372-8119

REVISION HISTORY

--/--/----	--/--/----
--/--/----	--/--/----
--/--/----	--/--/----
--/--/----	--/--/----
--/--/----	--/--/----
--/--/----	--/--/----
--/--/----	--/--/----

THE CIVIL ENGINEER REGULARLY UPDATES ELECTRONIC FILES DURING THE DEVELOPMENT OF A PROJECT. AS A RESULT, THE DATA INCLUDED IN ANY CAD FILE OR DRAWING PRIOR TO ITS FINAL RELEASE DOES NOT NECESSARILY REFLECT THE COMPLETE SCOPE OR CONTENT AS DEFINED IN THE CONTRACT. THE CONTENTS IN THESE FILES MAY THEREFORE BE PRELIMINARY, INCOMPLETE WORK IN PROGRESS, AND SUBJECT TO CHANGE. FURTHERMORE, THE INFORMATION CONTAINED HEREIN IS THE EXCLUSIVE PROPERTY OF THE CIVIL ENGINEER. THE ORIGINAL IDEAS REPRESENTED HERE BY THIS INFORMATION SHALL NOT BE USED, ALTERED, OR REPRODUCED IN ANY MANNER WITHOUT THE EXPRESSED WRITTEN CONSENT OF THE CIVIL ENGINEER. THESE PLANS ARE SUBJECT TO FEDERAL COPYRIGHT LAWS. ANY USE OF SAME WITHOUT EXPRESSED WRITTEN PERMISSION OF THE CIVIL ENGINEER IS PROHIBITED.

GCI PROJ #	140283
DWG NAME	140283 C06.DWG
ISSUE DATE	10/07/15
GCI PROJ MGR	JMP

ESPC DETAILS III

C06.5
SHEET NUMBER

ISSUED FOR PERMITTING

PLANT SCHEDULE

QTY.	COMMON NAME	BOTANICAL NAME	SIZE	
	TREES			
1	'MUSKOGEE' CRAPE MYRTLE	LAGERSTROEMIA INDICA X FAUERI 'MUSKOGEE'	2"-2.5" CAL. / 7'-8' HT.	B&B; MULTI-TRUNK; EVEN BRANCHING; VIGOROUS GROWTH
6	'AUTUMN BLAZE' RED MAPLE	ACER FREEMANII 'JEFFSRED'	3"-3 1/2" CAL. / 10-12' HT	B&B; CENTRAL LEADER; EVEN BRANCHING; VIGOROUS GROWTH
4	LIVE OAK	QUERCUS VIRGINIANA	3"-3 1/2" CAL. / 10-12' HT	B&B; CENTRAL LEADER; EVEN BRANCHING; VIGOROUS GROWTH
13	ALLEE ELM	ULMUS PARVIFOLIA 'EMER II'	3"-3 1/2" CAL. / 10-12' HT	B&B; CENTRAL LEADER; EVEN BRANCHING; VIGOROUS GROWTH
3	'BRACKEN'S BROWN BEAUTY' MAGNOLIA	MAGNOLIA GRANDIFLORA 'BRACKEN'S BROWN'	6-7 HT.	B&B; PYRAMIDAL; EVEN BRANCHING; VIGOROUS GROWTH
	SHRUBS			
54	JAPANESE LIGUSTRUM	LIGUSTRUM JAPONICUM	7 GAL.	FULL; VIGOROUS GROWTH
120	'GULF STREAM' NANDINA	NANDINA DOMESTICA 'GULF STREAM'	3 GAL.	FULL; VIGOROUS GROWTH
68	'SCHILLINGS DWARF' TAUPON HOLLY	ILEX VOMITORIA 'SCHILLINGS DWARF'	3 GAL.	FULL; VIGOROUS GROWTH
19	DWARF WHITE OLEANDER	NERIUM OLEANDER 'DWARF WHITE SANDS'	7 GAL.	FULL; VIGOROUS GROWTH
64	'SNOW WHITE' INDIAN HAWTHORN	'SNOW WHITE' RHAPIOLEPIS INDICA	3 GAL.	FULL; VIGOROUS GROWTH
8	'CHICA RED' DWARF CRAPE MYRTLE	LAGERSTROEMIA INDICA 'FGONED'	3 GAL.	FULL; VIGOROUS GROWTH
10	COMPACT CHERRY LAUREL	PRUNUS CAROLINIANA 'COMPACTA'	15 GAL.	FULL; VIGOROUS GROWTH
	GROUNDCOVERS			
20	WHITE LIGHTNIN' TRAILING LANTANA	LANTANA SELLOWIANA 'MONMA'	1 GAL.	FULL; VIGOROUS GROWTH; SPREADING
	LAWN			
S.F.	BAHIAGRASS SOD *	PASPALUM NOTATUM		

NOTES: SPECIES MUST MEET BOTH MINIMUM CALIPER OR GALLON SIZE AND HEIGHT IF LISTED.
ALL PLANT MATERIALS TO BE INSTALLED SHALL BE NURSERY GROWN AND ROOT PRUNED STOCK FREE OF INSECTS, DISEASE AND DEFECTS AND SHALL SATISFY THE REQUIREMENTS OF FLORIDA GRADE NO. 1 QUALITY OR BETTER AS DEFINED IN THE MOST CURRENT EDITION OF GRADES AND STANDARDS FOR NURSERY PLANTS, FLORIDA DEBARTMENT OF AGRICULTURE AND CONSUMER SERVICES.

ANY AREAS NOTED ON THE PLANS AS "SEED" OR "MULCH" WHERE THERE IS AN EXISTING LAWN AREA, MULCH AREA OR NATURAL AREA THAT IS DEEMED TO BE IN GOOD CONDITION, MAY INSTEAD BE MAINTAINED AS EXISTING. AREAS VOID OF VEGETATION OR GROUNDCOVER OR THAT EXHIBIT EVIDENCE OF EROSION, SHALL BE IMPROVED AS NECESSARY.
* PRIOR TO INSTALLATION, CONTRACTOR TO COORDINATE WITH PANDA EXPRESS PROJECT MANAGER TO VERIFY SOD TYPE TO BE USED.

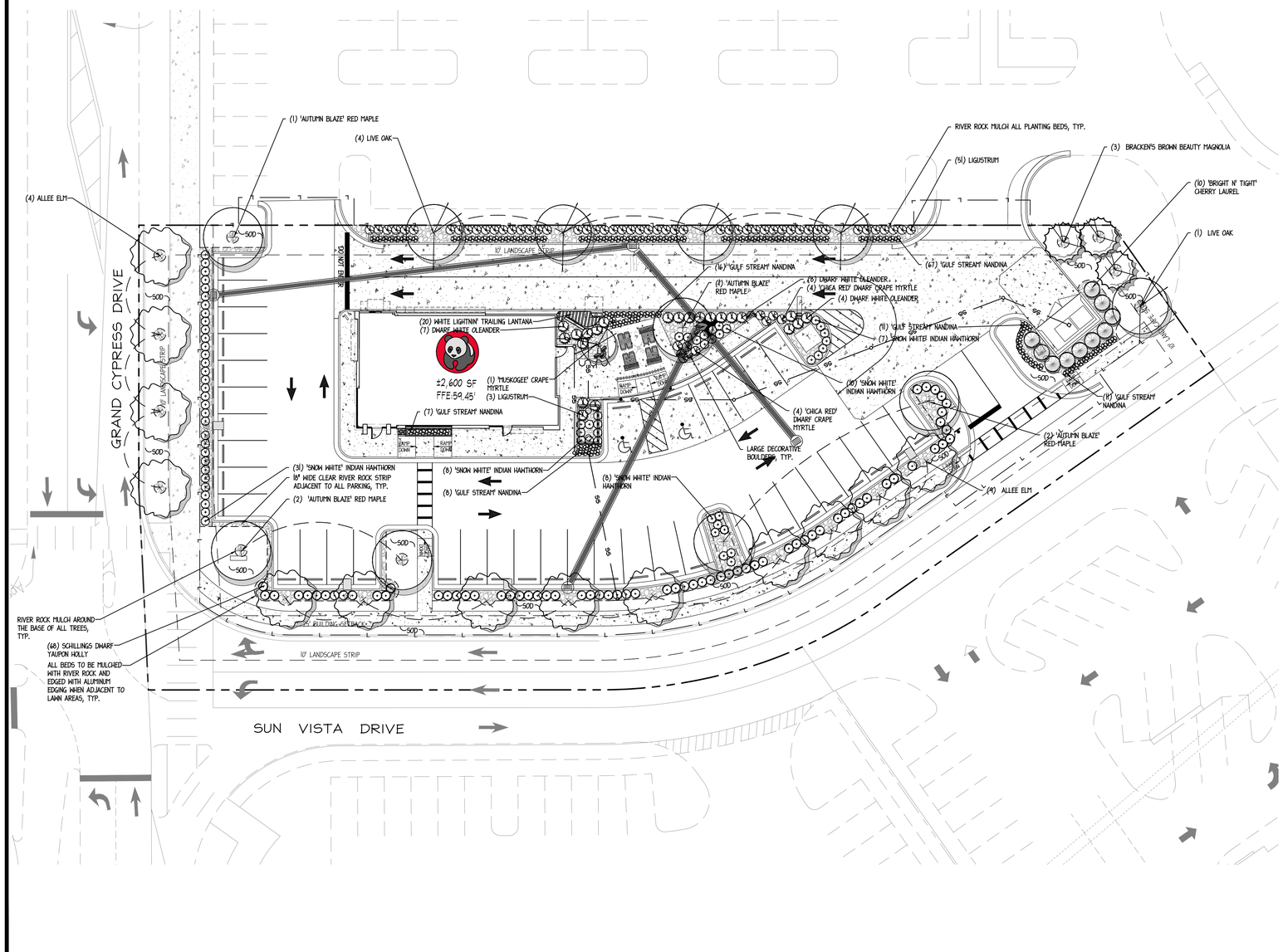

PASCO COUNTY LANDSCAPE REQUIREMENTS

STREETSCAPE BUFFERS:
THE FOLLOWING LANDSCAPE BUFFER IS REQUIRED FOR THE FOLLOWING:
- ADJACENT TO ANY ROAD RIGHT-OF-WAY EXTERNAL TO THE DEVELOPMENT.
- ADJACENT TO ANY NONLOCAL ACCESS ROADS INTERNAL TO A DEVELOPMENT.
- ADJACENT TO DOUBLE FRONTAGE LOTS.

SHADE AND UNDERSTORY TREES SHALL BE PLANTED AN AVERAGE OF (30) FEET APART. MINIMUM SPACING (20) FEET; MAXIMUM (45) FEET. THEREFORE THE FOLLOWING APPLIES:
GRAND CYPRESS DRIVE: 115 L.F. / 30 L.F. = 3.8 = (4) TREES REQUIRED AND (4) TREES HAVE BEEN PROVIDED.
SUN VISTA DRIVE: 300 L.F. / 30 L.F. = (10) TREES REQUIRED AND (10) TREES ARE PROVIDED.

BUFFER SHALL BE LANDSCAPED WITH (5) SHRUBS PER TREE AND GROUNDCOVER. THEREFORE THE FOLLOWING APPLIES:
GRAND CYPRESS DRIVE: 4 TREES X 5 SHRUBS = 20 SHRUBS REQUIRED.
SUN VISTA DRIVE: 10 TREES X 5 SHRUBS = 50 SHRUBS REQUIRED.

WHERE VEHICULAR USE AREAS ABUT THE RIGHT-OF-WAY BUFFER, THE BUFFER SHALL ALSO ONTAIN AN EARTHEN BERM A MINIMUM OF (18) INCHES IN HEIGHT; SHALL BE PLANTED SO AS TO FORM A CONTINUOUS, UNBROKEN, SOLID VISUAL SCREEN WITHIN ONE YEAR OF TIME OF PLANTING AND GROUNDCOVER PLANTS.

NO MORE THAN 30% OF THE REQUIRED LANDSCAPED AREA SHALL BE GRASSED.

PARKING:

10% INTERIOR LANDSCAPE AREA.

1 SHADE TREE FOR EVERY 200 SF OF REQUIRED LANDSCAPE AREA.

SHRUBS IN ISLANDS SHALL BE NO TALLER THAN 30".

TREES SHALL BE SET BACK 4' FROM DRIVE AISLES.

PERIMETERS:

A SINGLE ROW OF TREES MAX 60' O.C. IS REQUIRED FOR ALL PERIMETERS.

A CONTINUOUS ROW OF EVERGREEN SHRUBS IS REQUIRED FOR ALL PERIMETERS.

BUILDING PERIMETER:

50% OF BUILDING IS LANDSCAPED.

10% OF THE PROPOSED GROUND LEVEL FLOOR AREA OF THE BUILDING MUST BE PROVIDED IN THE BUILDING PERIMETER LANDSCAPING.

LANDSCAPE AREAS ADJACENT TO THE BUILDING MUST BE A MINIMUM OF 5' WIDE.

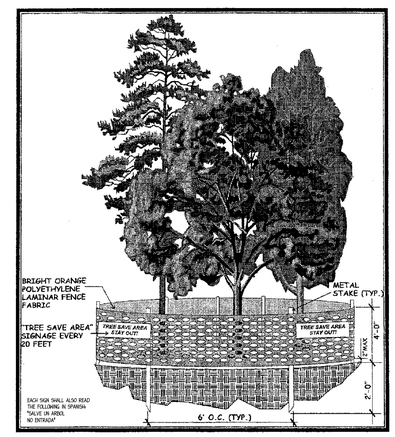

TREE FENCE DETAIL, TYP.

TF — TREE PROTECTION FENCING

TREE PROTECTION NOTES:

ALL TREE PROTECTION AREAS TO BE PROTECTED FROM SEDIMENTATION.

ALL TREE PROTECTION DEVICES TO BE INSTALLED PRIOR TO LAND DISTURBANCE AND MAINTAINED UNTIL FINAL LANDSCAPING.

ALL TREE PROTECTION FENCING TO BE INSPECTED DAILY AND REPAIRED OR REPLACED AS NEEDED.

NO PARKING, STORAGE OR OTHER CONSTRUCTION ACTIVITIES TO OCCUR WITHIN TREE PROTECTION AREAS OR WITHIN (3) FEET OF THE CRZ.

TREE PROTECTION FENCING SHALL BE INSTALLED PRIOR TO ANY LAND DISTURBANCE. TREE PROTECTION SHALL BE INSTALLED AS A RADIUS MEASURING (1) FOOT PER DIAMETER OF BREAST HEIGHT FROM THE TREE. LIMITS OF LAND DISTURBANCE SHALL BE OUTSIDE ALL TREE PROTECTION FENCING. BUILDING CONTRACTOR SHALL MAINTAIN THE TREE PROTECTION FENCE THROUGHOUT THE PROJECT DURATION.

TREES IDENTIFIED TO BE PRESERVED AND COUNTED AS CREDIT FOR MEETING REQUIRED UNIT DENSITY SHALL HAVE (4) FOOT HIGH ORANGE TREE PROTECTION FENCING INSTALLED AT THE CRITICAL ROOT ZONES.

NO PERSON ENGAGED IN THE CONSTRUCTION OF ANY STRUCTURE(S) OR IMPROVEMENT(S) OR ANY ACTIVITY SHALL ENCROACH OR PLACE SOLVENTS, MATERIAL, CONSTRUCTION MACHINERY OR TEMPORARY SOIL DEPOSITS WITHIN TREE SAVE AREA.

NOTE: ALL MECHANICAL EQUIPMENT WILL BE PROPERLY SCREENED FROM PUBLIC VIEW.

NOTE: ALL ADA RAMPS SHALL MEET STATE OF FLORIDA BUILDING CODES, LATEST EDITION.

GRAPHIC SCALE (in feet): 1" = 20'
10' 0' 20' 40'

Alan D. Holt, A.S.L.A.
LANDSCAPE ARCHITECT, PA
FL LC#26000193
P.O. BOX 2549
PANAMA CITY, FL 32402
TELEPHONE: (850)914-9006
E-MAIL:alan@alandholtasla.com

PANDA EXPRESS
CYPRESS CREEK TOWN CENTER
GRAND CYPRESS DRIVE
WESLEY CHAPEL, FLORIDA

PLANS FOR:

CLIENT:
PANDA RESTAURANT GROUP, INC.
1683 WALNUT GROVE AVE
ROSEMEAD, CA 91770
PHONE: (626) 372-8119

REVISION HISTORY

--/--/----	--/--/----
--/--/----	--/--/----
--/--/----	--/--/----
--/--/----	--/--/----
--/--/----	--/--/----
--/--/----	--/--/----
--/--/----	--/--/----

THE CIVIL ENGINEER REGULARLY UPDATES ELECTRONIC FILES DURING THE DEVELOPMENT OF A PROJECT. AS A RESULT, THE DATA INCLUDED IN ANY CAD FILE OR DRAWING PRIOR TO ITS FINAL RELEASE DOES NOT NECESSARILY REFLECT THE COMPLETE SCOPE OR CONTENT AS DEFINED IN THE CONTRACT. THE CONTENTS IN THESE FILES MAY THEREFORE BE PRELIMINARY, INCOMPLETE WORK IN PROGRESS, AND SUBJECT TO CHANGE. FURTHERMORE, THE INFORMATION CONTAINED HEREIN IS THE EXCLUSIVE PROPERTY OF THE CIVIL ENGINEER. THE ORIGINAL IDEAS REPRESENTED HERE BY THIS INFORMATION SHALL NOT BE USED, ALTERED, OR REPRODUCED IN ANY MANNER WITHOUT THE EXPRESSED WRITTEN CONSENT OF THE CIVIL ENGINEER. THESE PLANS ARE SUBJECT TO FEDERAL COPYRIGHT LAWS. ANY USE OF SAME WITHOUT EXPRESSED WRITTEN PERMISSION OF THE CIVIL ENGINEER IS PROHIBITED.

GCI PROJ #	140283
DWG NAME	140283 L01.DWG
ISSUE DATE	10/07/15
GCI PROJ MGR	JMP

LANDSCAPE PLAN

L01.0
SHEET NUMBER

ISSUED FOR PERMITTING

LANDSCAPE NOTES:

DELIVERY, STORAGE AND HANDLING

A. DELIVER MATERIALS IN SUCH A MANNER AS TO NOT DAMAGE OR DECREASE THE HEALTH AND VIGOR OF THE PLANT MATERIALS.

B. STORE MATERIALS AWAY FROM DETRIMENTAL ELEMENTS. COORDINATE WITH GENERAL CONTRACTOR TO SECURE A SAFE STAGING AREA.

C. HANDLE, LOAD, UNLOAD, AND TRANSPORT MATERIALS CAREFULLY TO AVOID DAMAGE.

D. MAINTAIN AND PROTECT PLANT MATERIALS AS NECESSARY TO INSURE HEALTH AND VIGOR.

GUARANTEE

A. GUARANTEE PLANT MATERIALS AND LAWN AREAS FOR YEAR FROM THE DATE OF SUBSTANTIAL COMPLETION. CONTRACTOR SHALL REPLACE PLANTS AND LAWNS, THAT FAIL TO GROW PROPERLY WITH PLANTS AS ORIGINALLY SPECIFIED AT THE EARLIEST PRACTICAL DATE FOLLOWING PLANT FAILURE, WITHOUT ADDITIONAL CHARGES TO THE OWNER. REPLACEMENT MATERIALS WILL BE GUARANTEED FOR ONE YEAR FROM THE DATE OF REPLACEMENT. THE CONTRACTOR SHALL NOT BE RESPONSIBLE FOR REPLACING PLANTS WHICH ARE DAMAGED BY ABUSE OR IMPROPER MAINTENANCE BY OWNER, OR BY ACTS OF GOD OCCURRING AFTER ACCEPTANCE.

MATERIAL FOR STAKING

A. STAKES FOR SUPPORTING TREES SHALL BE SOUND TIMBER, STRAIGHT, SIZED AS SHOWN IN PLANTING DETAILS AND OF SUFFICIENT LENGTH TO ADEQUATELY SUPPORT THE PLANT.

B. DEADMEN OR STAKES FOR ANCHORING STRAPS IN THE GROUND SHALL BE OF SIZE MATERIAL, AND STRENGTH ADEQUATE TO HOLD STRAPS TOUT AND MAINTAIN TREE FIRMLY IN AN UPRIGHT POSITION.

GUYING, STAKING AND MULCHING

A. USE ARBORTIE OR EQUIVALENT FOR ANY NEEDED STAKING TO ELIMINATE USE OF WIRE AND HOSE. STRAPS SHALL BE WIDE, SOFT, FLEXIBLE MATERIAL MANUFACTURED FOR THE PURPOSE OF TREE ANCHORING SUCH AS WOVEN POLYPROPYLENE WEBBING. ANY STAKING MATERIAL IS TO BE REMOVED AFTER THE FIRST GROWING SEASON.

A. STAKE TREES TWO-INCH CALIPER AND OVER. SPACE THREE STRAPS EQUALLY ABOUT EACH TREE, ATTACHED AT APPROXIMATELY TWO-FIFTHS UP THE TRUNK. STRAPS SHOULD BE AT A 45-DEGREE ANGLE AND ANCHORED IN THE GROUND WITH STAKES. THESE STRAPS SHALL BE EQUALLY TOUT.

B. STAKE TREES LESS THAN TWO INCHES CALIPER WITH TWO OR THREE WOOD STAKES DRIVEN TWO FEET INTO THE GROUND WITH THE PORTION EXTENDING ABOVE THE GROUND APPROXIMATELY ONE-HALF OF THE TRUNK HEIGHT. STAKE ONE FOOT FROM TRUNK, FASTENED AT APPROXIMATELY TWO-FIFTHS OF TRUNK HEIGHT.

C. MULCH ALL PLANTING BEDS AND OTHER AREAS DESIGNATED TO BE MULCHED (WITH THE EXCEPTION OF ANY ANNUAL, SEASONAL COLOR OR PERENNIAL BEDS) WITH TWO TO THREE INCHES OF RIVER ROCK. CONTRACTOR TO PROVIDE A MATERIAL SAMPLE TO PANDA EXPRESS PROJECT MANAGER PRIOR TO INSTALLATION FOR COLOR AND SIZE APPROVAL. ANY LANDSCAPE BEDS NOTED AS ANNUAL, SEASONAL COLOR AND/OR PERENNIAL BEDS SHALL BE MULCHED WITH SMALL SIZED PEA GRAVEL SUCH AS INDIANA PEA GRAVEL. CONTRACTOR TO PROVIDE A MATERIAL SAMPLE TO PANDA EXPRESS PROJECT MANAGER PRIOR TO INSTALLATION FOR COLOR AND SIZE APPROVAL.

EXCAVATION FOR PLANTING TREES AND SHRUBS

A. CIRCULAR PLANT PITS WITH VERTICAL SIDES SHALL BE DUG BY HAND OR MACHINE METHODS FOR PLANTING OF TREES AND SHRUBS.

B. TREE PIT DIAMETERS SHALL BE A MINIMUM OF TWO FEET GREATER THAN THE SPREAD OF THE ROOT MASS.

C. SHRUB PIT DIAMETER SHALL BE A MINIMUM OF ONE FOOT GREATER THAN THE SPREAD OF THE ROOT MASS.

D. CONTRACTOR SHALL TEST EXCAVATED PLANT PITS TO SATISFY THAT SUFFICIENT DRAINAGE IS PRESENT FOR PROPER PLANT SURVIVAL.

E. IF THE INDIVIDUAL PITS ARE ARRANGED IN A GROUP, THE AREA BETWEEN PITS SHALL BE FILLED TO THE REQUIRED GRADE WITH EXISTING SOIL AND MULCHED WITH RIVER ROCK MULCH THREE INCHES DEEP. PLANT BEDS SHALL BE NEATLY EDGED AND KEPT FREE OF WEEDS UNTIL THE WORK IS ACCEPTED.

TOPSOIL

A. TOPSOIL SHALL BE FERTILE, FRIABLE, SANDY LOAM, AND SHALL BE NATURAL SURFACE SOIL OBTAINED FROM WELL DRAINED AREAS. TOPSOIL SHALL BE CHARACTERISTIC OF REPRESENTATIVE SOILS IN THE PROJECT VICINITY THAT PRODUCE HEAVY GROWTHS OF CROPS, GRASS OR OTHER VEGETATION. TOPSOIL SHALL BE FREE OF SUBSOIL, BRUSH, ORGANIC LITTER, OBJECTIONABLE WEEDS, CLAY, CLOTS, STUMPS, ROOTS OR OTHER MATERIAL HARMFUL TO PLANT GROWTH OR HINDRANCE TO PLANTING OR MAINTENANCE OPERATIONS. SHOULD REGENERATIVE MATERIALS BE PRESENT IN THE SOIL, CONTRACTOR SHALL ERADICATE AND REMOVE SUCH GROWTH, BOTH SURFACE AND ROOT, WHICH MAY APPEAR IN THE IMPORTED MATERIAL WITHIN ONE YEAR FOLLOWING ACCEPTANCE OF THE WORK. TOPSOIL SHALL NOT BE HANDLED IN A FROZEN OR MUDDY CONDITION. THE ACIDITY RANGE SHALL BE BETWEEN 5.0 AND 7.0 INCLUSIVE.

FERTILIZER

A. FERTILIZER FOR ALL TREES, SHRUBS AND GROUNDCOVERS SHALL BE STA GREEN NURSERY SPECIAL OR EQUIVALENT AND DELIVERED TO THE SITE IN UNOPENED CONTAINERS.

B. FERTILIZER FOR GRASS SHALL BE STA-GREEN FERTILIZER OR EQUIVALENT CONTAINING THE FOLLOWING PERCENTAGES BY HEIGHT:

10% NITROGEN
24% PHOSPHOROUS
10% POTASH

FERTILIZER SHALL BE UNIFORM IN COMPOSITION, DRY AND FREE FLOWING, AND SHALL LIST THE MANUFACTURER'S GUARANTEED ANALYSIS. FERTILIZER SHALL NOT HAVE BEEN EXPOSED TO WEATHER PRIOR TO DELIVERY TO THE SITE. AFTER DELIVERY UNTIL USED, IT SHALL BE COMPLETELY PROTECTED AT ALL TIMES. IT SHALL NOT BE STORED IN CONTACT WITH THE THE GROUND.

MULCH

A. RIVER ROCK AND/OR PEA GRAVEL SHALL BE RINSED CLEAN ON SITE PRIOR TO INSTALLATION IN PLANTING BEDS.

LANDSCAPE BED EDGING

A. ALL BEDS MULCHED WITH RIVER ROCK SHALL BE EDGED WHEN ADJACENT TO LAWN AREAS. EDGING SHALL BE ALUMINUM AND BLACK IN COLOR, PERMALOC ALUMINUM ALLOY BLACK ANODIZED EDGING OR EQUIVALENT.

DRAINAGE TEST

A. REPRESENTATIVE TREE AND SHRUB PITS FROM EACH PLANTING AREA SHALL BE FILLED WITH WATER. IF PERCOLATION IS LESS THAN 100 TWELVE-INCH AUGER TO A DEPTH OF FOUR FEET BELOW THE BOTTOM OF THE TREE PIT, RETEST THE PIT. IN CASE DRAINAGE IS STILL UNSATISFACTORY NOTIFY THE LANDSCAPE ARCHITECT, IN WRITING OF THE CONDITION BEFORE PLANTING TREES IN THE QUESTIONABLE AREAS. CONTRACTOR IS FULLY RESPONSIBLE FOR THE WARRANTY OF PLANTINGS.

B. GROUNDCOVER BEDS SHALL ALSO BE SPOT TESTED FOR DRAINAGE.

C. DISPOSE OF SUBSOIL REMOVED FROM LANDSCAPE EXCAVATIONS. DO NOT MIX WITH THE PLANTING SOIL. DO NOT USE AS BACKFILL OR USE TO CONSTRUCT SAUCERS AROUND PITS.

SETTING TREES, SHRUBS AND GROUNDCOVERS

A. BALLED AND CONTAINER PLANTS SHALL BE PLACED FIRMLY UPON SCARIFIED SUB-GRADE AND BACKFILLED WITH PLANTING SOIL MIXTURE. REMOVE ALL WIRE, CARDS AND BURLAP FROM TOP OF ROOT BALL. HAND TAMP CAREFULLY AROUND AND UNDER BALL TO FILL ALL VOIDS. WATER DURING BACKFILLING. FORM SAUCER FROM PLANTING SOIL MIXTURE IN ORDER TO RETAIN WATER.

B. GENTLY LOOSEN OUTER ROOTS OF CONTAINER GROWN PLANTS TO ENCOURAGE OUTWARD GROWTH.

C. FERTILIZER SHALL BE THOROUGHLY MIXED AND SOAKED INTO THE TOP TWO INCHES OF SOIL FOR ALL PLANT PITS.

TREE TRANSPORTATION

A. THE CONTRACTOR SHALL BE RESPONSIBLE NOT ONLY FOR THE SAFE TRANSPORTATION OF THE PLANTS TO THE SITE BUT ALSO THEIR CONDITION UPON ARRIVAL. TREES WITH ABRASIONS OF THE BARK, SUNSCALDS, FRESH CUTS OR BREAKS OF LIMBS WHICH HAVE NOT COMPLETELY CALLOUSED WILL BE REJECTED. TREES WHICH HAVE BEEN DAMAGED DURING TRANSIT WILL BE REPLACED BY CONTRACTOR AT NO ADDITIONAL COST. ALL PLANT UNIT COSTS WILL REFLECT ALL THE ABOVE LISTED SPECIFICATIONS.

PRUNING

A. DECIDUOUS TREES AND SHRUBS SHALL HAVE DEAD, BROKEN AND CROWDED WOOD PRUNED TO COMPENSATE FOR THE LOSS OF ROOTS IN TRANSPLANTING. REQUESTED AND REQUIRED ADDITIONAL PRUNING MAY BE NECESSARY AT THE DIRECTION OF THE LANDSCAPE ARCHITECT.

B. EVERGREEN TREES AND SHRUBS SHALL BE PRUNED ONLY TO THINK OUT HEAVY GROWTH.

C. CUTS OVER 3/4 INCH IN DIAMETER SHALL BE PAINTED WITH TREE DRESSING PAINT. NO PAINT CONTAINING LEAD SHALL BE PERMITTED.

PREPARATION OF GRASS AREAS

A. FINE GRADE ALL GRASS AREAS TO FINISH GRADE. ALL AREAS SHALL HAVE SMOOTH AND CONTINUAL GRADE BETWEEN THE EXISTING AND FIXED CONTROLS SUCH AS WALKS AND CURBS. ROLL, SCARIFY, RAKE AND LEVEL AS NECESSARY TO OBTAIN TRUE, EVEN AND FIRM LAWN SURFACES. ALL FINISHED GRADES SHALL MEET APPROVAL OF THE LANDSCAPE ARCHITECT OR OWNER'S REPRESENTATIVE BEFORE GRASSING OPERATIONS BEGIN.

B. AREAS TO RECEIVE GRASS

I. TYPE OF TURF TO BE APPROVED BY OWNER.
II. CONTRACTOR TO BE RESPONSIBLE FOR FIELD VERIFICATION OF SOD AREAS TO CONFIRM SQUARE FOOTAGES.
III. GRADE WILL BE BROUGHT TO THE LEVEL OF +/- 1" OF THE FINISHED GRADE BY THE GENERAL CONTRACTOR. THE LANDSCAPE CONTRACTOR WILL BE RESPONSIBLE FOR THE TOP +/- 1" OF SOIL WORK. THIS IS TO INCLUDE ALL TOPSOIL HAULING AND PLACEMENT; SPREADING; DEBRIS REMOVAL AND ANY GRADING REQUIRED TO BRING THE FINISHED TOPSOIL GRADE TO THE PROPER LEVEL FOR GRASS.
IV. THOROUGHLY TILL EXISTING SOIL TO A MINIMUM DEPTH OF FOUR INCHES BY RUNNING TILLING DEVICE TWO DIRECTIONS AT RIGHT ANGLES OVER THE ENTIRE SURFACE TO BE GRASSED. FINE GRADE TO ACHIEVE UNIFORMITY AND DRAINAGE.
V. SPREAD SPECIFIED FERTILIZER AS PER MANUFACTURER'S RECOMMENDATIONS.
VI. WORK SOIL TO A UNIFORM GRADE SO THAT ALL AREAS HAVE POSITIVE DRAINAGE AWAY FROM DRIVES, BUILDINGS AND LANDSCAPED AREAS.
VII. CONTRACTOR TO COORDINATE WITH PANDA EXPRESS PROJECT MANAGER FOR TURF SELECTION PRIOR TO INSTALLATION.

CLEANUP & PROTECTION

A. DURING PLANTING OPERATIONS KEEP PROJECT SITE CLEAN AND ORDERLY.

B. UPON COMPLETION OF WORK, CLEAR GROUNDS OF DEBRIS, SUPERFLUOUS MATERIALS AND ALL EQUIPMENT. REMOVE FROM SITE TO SATISFACTION OF THE LANDSCAPE ARCHITECT AND OWNER.

C. PROTECT ALL WORK AND MATERIALS FROM DAMAGE DUE TO IRRIGATION OPERATIONS AND OPERATIONS BY OTHER CONTRACTORS, TRADES, AND TRESPASSERS. MAINTAIN PROTECTION UNTIL DATE OF SUBSTANTIAL COMPLETION.

D. CONTRACTOR IS RESPONSIBLE FOR THEFT OF EQUIPMENT AND MATERIAL AT THE JOB SITE BEFORE, DURING AND AFTER INSTALLATION, UNTIL DATE OF SUBSTANTIAL COMPLETION OF THE WORK IN TOTAL.

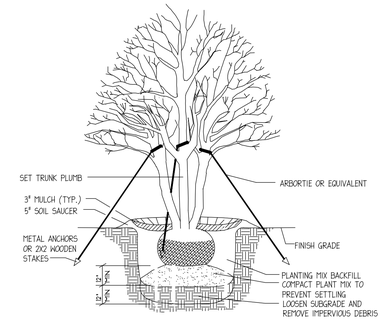

NOTE: 1. STAKING FOR TREES 2" CAL. EA. TRUNK OR SMALLER. TREES LARGER THAN 2" CAL. TO BE GUYED.

1 DETAIL MULTI-TRUNKED TREE PLANTING

NOT TO SCALE

NOTE: ALL TREES MUST BE PLANTED AT LEAST 10' FROM ALL UTILITY LINES

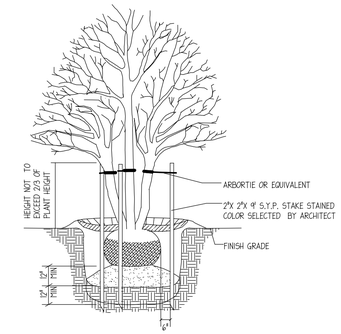

NOTE: 1. STAKING FOR TREES 2" CAL. EA. TRUNK OR SMALLER. TREES LARGER THAN 2" CAL. TO BE GUYED.

2 DETAIL MULTI-TRUNKED TREE STAKING

NOT TO SCALE

NOTE: ALL TREES MUST BE PLANTED AT LEAST 10' FROM ALL UTILITY LINES

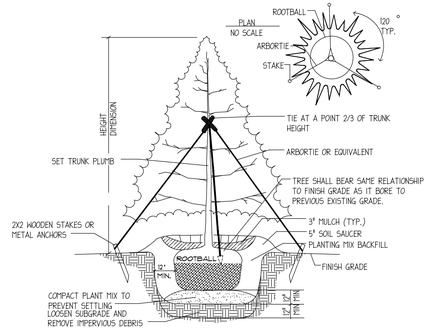

NOTES: 1. EVERGREEN TREES 2" CAL OR SMALLER TO BE STAKED.
2. PROVIDE WATER CRYSTALS PER MANUFACTURER'S RECOMMENDATIONS FOR PINE TREES.

3 DETAIL EVERGREEN TREE PLANTING

NOT TO SCALE

NOTE: ALL TREES MUST BE PLANTED AT LEAST 10' FROM ALL UTILITY LINES

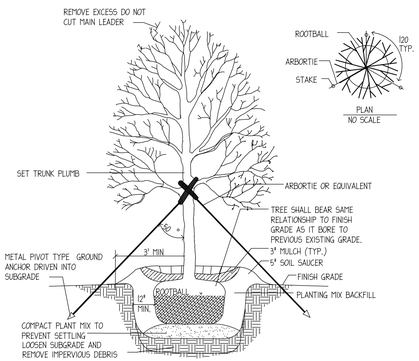

4 DETAIL TYPICAL TREE PLANTING AND GUYING

NOT TO SCALE

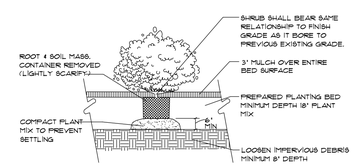

5 DETAIL TYPICAL FOR ALL PLANTS SPACED LESS THAN 36" O.C.

NOT TO SCALE

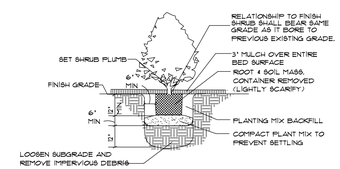

6 DETAIL TYPICAL CONTAINERIZED SHRUB PLANTING

NOT TO SCALE

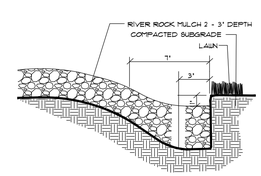

NOTE: TRENCH EDGE TO BE LOCATED BETWEEN PLANTING BEDS AND ALL LAWN AREAS.

7 TRENCH EDGER DETAIL FOR ALL BEDS

NOT TO SCALE

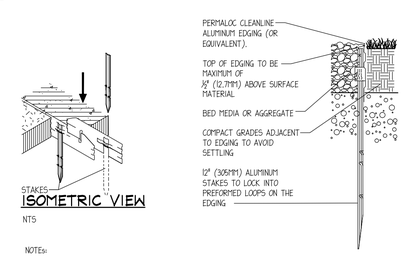

NOTES:

1) ALL ALUMINUM EDGING SHALL BE BLACK IN COLOR. PERMALOC ALUMINUM ALLOY BLACK ANODIZED EDGING OR EQUIVALENT.
2) INSTALL EDGING SO THAT STAKES WILL BE ON INSIDE OF PLANTING BED.
3) BOTTOM OF EDGING SHALL BE BURIED A MINIMUM OF 1" BELOW FINISH GRADE.
3) TOP OF MULCH / RIVER ROCK SHALL BE 1/2" LOWER THAN TOP OF EDGING.

8 ALUMINUM LANDSCAPE BED EDGING

NOT TO SCALE

Alan D. Holt, A.S.L.A.
LANDSCAPE ARCHITECT, PA
FL LC#26000193
P.O. BOX 2549
PANAMA CITY, FL 32402
TELEPHONE: (850)914-9006
E-MAIL:alan@alandholtasla.com

PANDA EXPRESS
CYPRESS CREEK TOWN CENTER
GRAND CYPRESS DRIVE
WESLEY CHAPEL, FLORIDA

PANDA EXPRESS · CHINESE KITCHEN

PLANS FOR:

CLIENT:

PANDA RESTAURANT GROUP, INC.

1683 WALNUT GROVE AVE
ROSEMEAD, CA 91770
PHONE: (626) 372-8119

REVISION HISTORY

--/--/----	--/--/----
--/--/----	--/--/----
--/--/----	--/--/----
--/--/----	--/--/----
--/--/----	--/--/----
--/--/----	--/--/----
--/--/----	--/--/----

THE CIVIL ENGINEER REGULARLY UPDATES ELECTRONIC FILES DURING THE DEVELOPMENT OF A PROJECT, AS A RESULT, THE DATA INCLUDED IN ANY CAD FILE OR DRAWING PRIOR TO ITS FINAL RELEASE DOES NOT NECESSARILY REFLECT THE COMPLETE SCOPE OR CONTENT AS DEFINED IN THE CONTRACT. THE CONTENTS IN THESE FILES MAY THEREFORE BE PRELIMINARY, INCOMPLETE WORK IN PROGRESS, AND SUBJECT TO CHANGE. FURTHERMORE, THE INFORMATION CONTAINED HEREIN IS THE EXCLUSIVE PROPERTY OF THE CIVIL ENGINEER. THE ORIGINAL IDEAS REPRESENTED HERE BY THIS INFORMATION SHALL NOT BE USED, ALTERED, OR REPRODUCED IN ANY MANNER WITHOUT THE EXPRESSED WRITTEN CONSENT OF THE CIVIL ENGINEER. THESE PLANS ARE SUBJECT TO FEDERAL COPYRIGHT LAWS. ANY USE OF SAME WITHOUT EXPRESSED WRITTEN PERMISSION OF THE CIVIL ENGINEER IS PROHIBITED.

GCI PROJ #	140283
DWG NAME	140283 L01.DWG
ISSUE DATE	10/07/15
GCI PROJ MGR	JMP

LANDSCAPE DETAILS

L01.1

SHEET NUMBER

ISSUED FOR PERMITTING