RANGELAND BOULEVARD
WEST EXTENSION PHASE 2

Prepared For:

WS-TSR, LLC
(WHEELOCK STREET CAPITAL)
521 13th Street
Saint Cloud, FL 34769
Phone: (321) 805-4830

5806-B Breckenridge Parkway
Tampa, Florida 33610
Office: 813-253-5311
Fax: 813-464-7629

www.HeidtDesign.com

HEIDT DESIGN
Civil Engineering • Planning & GIS
Transportation Engineering
Ecological Services • Landscape Architecture

Engineering Business Certificate of Authorization No. 28782
Landscape Architecture Certificate of Authorization No. LC26000405

PRELIMINARY SITE / CONSTRUCTION / STORMWATER MANAGEMENT PLAN

CALL 48 HOURS BEFORE YOU DIG
Sunshine State One Call 811 OF FLORIDA, INC.
1-800-432-4770

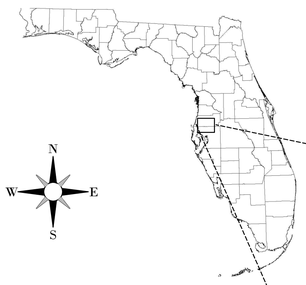

SECTIONS 19 & 20, TOWNSHIP 26 SOUTH, RANGE 17 EAST,
PASCO COUNTY, FLORIDA

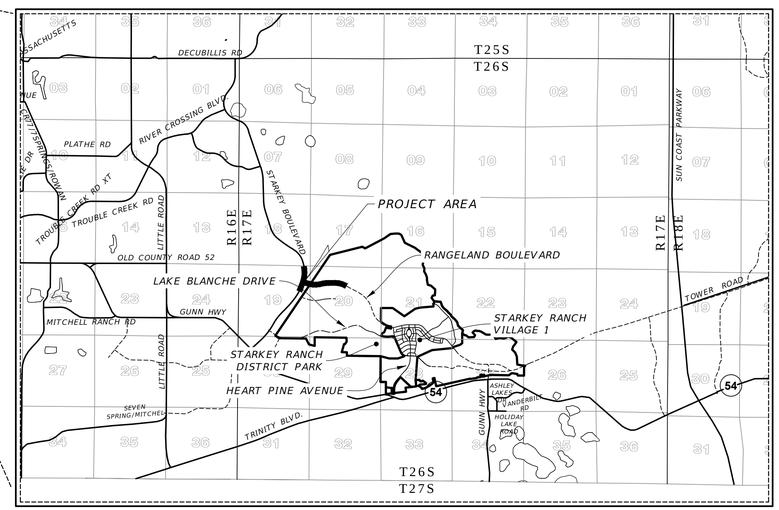

LOCATION MAP
(1" = 1 MILE)

OWNER/DEVELOPER:

WS-TSR, LLC
MATT CALL
521 13th STREET
SAINT CLOUD, FL 34769
(321) 805-4830
matt.call@mylandteam.com

CIVIL ENGINEER:

HEIDT DESIGN, LLC
GARY D. MILLER P.E.
5806-B BRECKENRIDGE PARKWAY
TAMPA, FLORIDA 33610
(813) 253-5311
garym@heidtdesign.com

GEOTECHNICAL ENGINEER:

MORTENSEN ENGINEERING, INC.
RICHARD A. MORTENSEN P.E.
6408 W. LINEBAUGH AVENUE, SUITE 111
TAMPA, FLORIDA 33625
(813) 908-5555
rmortensen@meitampa.com

SURVEYOR:

GEOPOINT SURVEYING, INC.
DAVID WILLIAMS, P.S.M.
1403 E. 5TH AVENUE
TAMPA, FL 33605
(813) 248-8888
davidw@geopointsurvey.com

PASCO COUNTY SUBMITTAL DATE:
DECEMBER 30, 2015

THESE PLANS HAVE BEEN PREPARED IN ACCORDANCE WITH THE MANUAL OF UNIFORM MINIMUM STANDARDS FOR DESIGN, CONSTRUCTION AND MAINTENANCE FOR STREETS AND HIGHWAYS, STATE OF FLORIDA IN EFFECT AT THE TIME OF PASCO COUNTY APPROVAL, AND ARE IN COMPLIANCE WITH THE STANDARDS THEREIN EXCEPT AS NOTED ON THE PLANS. ANY DEVIATIONS NOTED ON THE PLANS SUBSTANTIALLY COMPLY WITH THE INTENT OF THE STANDARDS.

Sheet List Table

Sheet Number	Sheet Title
C-100	COVER SHEET
C-101 - C-102	GENERAL NOTES
C-103	AERIAL SITE PLAN
C-104	PRELIMINARY PLAN
C-201 - C-203	TYPICAL ROADWAY SECTIONS
C-300	MASTER DRAINAGE PLAN
C-301 - C-303	GRADING AND DRAINAGE PLAN
C-304 - C-306	INTERSECTION IMPROVEMENTS PLAN
C-307	STORM STRUCTURE DATA
C-308	CONTROL STRUCTURE DATA SHEET
C-371 - C-377	DRAINAGE DETAILS
C-400	MASTER UTILITY PLAN
C-501 - C-504	ROADWAY PLAN & PROFILE
C-505 - C-508	UTILITY PLAN & PROFILE
C-509	SANITARY SEWER PROFILES
C-601 - C-603	UTILITY DETAILS
C-700	SIGNING, PAVEMENT MARKING, AND SIDEWALK KEY SHEET
C-701 - C-703	SIGNING, PAVEMENT MARKING, AND SIDEWALK PLAN-RANGELAND
C-704 - C-705	SIGNING, PAVEMENT MARKING, AND SIDEWALK PLAN-STARKEY
C-706	SIDEWALK DETAILS
C-900	CONSTRUCTION SURFACE WATER MANAGEMENT PLAN
C-901	CONSTRUCTION SURFACE WATER MANAGEMENT PLAN - NOTES
C-902	CONSTRUCTION SURFACE WATER MANAGEMENT PLAN - DETAILS
C-903	PRE-DEVELOPMENT DRAINAGE AREA MAP
C-904	POST DEVELOPMENT DRAINAGE AREA MAP
C-905 - C-907	DRAINAGE AREA SUB-BASIN MAP
L-200	TREE REMOVAL COVER
L-201 - L-203	TREE REMOVAL PLAN
L-400	LANDSCAPE COVER
L-401 - L-403	PERMIT LANDSCAPE PLAN
L-470	LANDSCAPE NOTES AND DETAILS

RANGELAND BOULEVARD
WEST EXTENSION PHASE 2

WS-TSR, LLC
(WHEELOCK STREET CAPITAL)

LENGTH OF PROJECT

	LINEAR FEET	*MILES*
ROADWAY - RANGELAND BLVD.	*3130*	*0.593*
ROADWAY - STARKEY BLVD.	*1750*	*0.331*
BRIDGES	*0*	*0.000*
NET LENGTH OF PROJECT	*4880*	*0.924*
EXCEPTIONS	*0*	*0.000*
GROSS LENGTH OF PROJECT	*4880*	*0.924*

PROJECT LENGTH IS BASED ON CONSTRUCTION BASELINES

	DATE	DESCRIPTION
1	12/30/2015	INITIAL REVIEW SUBMITTAL

PLAN REVISIONS

	DATE	DESCRIPTION

PLAN REVISIONS

R:\STARKEY RANCH\RANGELAND BLVD WEST EXT PHASE 2\ENGINEERING\COVER.DWG-C-100 2015/12/30 9:39 AM MARK JONES

© COPYRIGHT 2015, HEIDT DESIGN, LLC. ALL RIGHTS RESERVED. NO DOCUMENTATION (INCLUDING BUT NOT LIMITED TO DRAWINGS OR EXHIBITS) MAY BE COPIED, REPRODUCED, OR DISTRIBUTED UNLESS SPECIFIC WRITTEN PERMISSION HAS BEEN OBTAINED FROM HEIDT DESIGN, LLC. IN ADVANCE. CONSENT IS HEREBY GRANTED SPECIFICALLY TO GOVERNMENTAL AGENCIES TO REPRODUCE THIS DOCUMENTATION IN COMPLIANCE WITH F.S. CHAPTER 119.

HEIDT DESIGN
Civil Engineering • Planning & GIS
Transportation Engineering
Ecological Services • Landscape Architecture

ELEVATIONS BASED ON:
NORTH AMERICAN VERTICAL DATUM 1988
CONVERSION: NAVD 88 TO NGVD 29 = +0.85

ADDRESS CONTROL NUMBER	
WATER COMMITMENT	
SEWER COMMITMENT	
SWFWMD	
WATER DEP	
SEWER DEP	
FOLIO	*20-26-17-0000-00300-0000* *20-26-17-0000-00100-0010 (PORTION OF)* *21-26-17-0000-00200-0000 (PORTION OF)*

PERMIT / FILE NUMBERS

FLORIDA PROFESSIONAL ENGINEER

GARY D. MILLER
DATE:
REGISTRATION NO. 52717

FILE:	*COVER*
PROJECT NO:	*TSR SR 1072*

GRADING & DRAINAGE	
DESIGN BY:	*MOORE*
DRAWN BY:	*JONES*

UTILITIES	
DESIGN BY:	*JONES*
DRAWN BY:	*JONES*

COVER SHEET

C-100

SSM: ----

GENERAL EROSION AND TURBIDITY CONTROL NOTES

1. THE SITE SUBCONTRACTOR SHALL BE RESPONSIBLE FOR INSTALLATION AND MAINTENANCE OF ALL EROSION AND TURBIDITY CONTROLS AND THE QUALITY AND QUANTITY OF OFFSITE OR WETLAND DISCHARGES.
2. PRIOR TO CONSTRUCTION, THE SITE SUBCONTRACTOR IS RESPONSIBLE FOR HAVING HIS DEWATERING PLAN AND TURBIDITY CONTROL PLAN APPROVED BY THE APPLICABLE REVIEWING AGENCIES. REFER TO THE PROJECT'S PERMIT APPROVALS AND PERMIT CONDITIONS FOR AGENCIES REQUIRING SUCH REVIEW AND APPROVAL. QUESTIONS CONCERNING APPROPRIATE TECHNIQUES SHOULD BE ADDRESSED TO THOSE AGENCIES AND/OR DISCUSSED WITH THE PROJECT ENGINEER AND OWNER.
3. THE APPROPRIATE TURBIDITY AND EROSION CONTROL METHODOLOGIES SELECTED BY THE SITE SUBCONTRACTOR FOR THIS PROJECT SHOULD BE MADE FOLLOWING ASSESSMENT OF THE PLANS AND PROJECT SITE SPECIFIC FACTORS AND AFTER CONSULTATIONS AS NEEDED WITH THE PROJECT ENGINEER AND APPROPRIATE AGENCIES. THE SITE SUBCONTRACTOR WILL BE RESPONSIBLE FOR OBTAINING ANY AND ALL NECESSARY PERMITS FOR SUCH ACTIVITY; SEVERAL FACTORS TO CONSIDER ARE LISTED BELOW:
   - A. CLAY CONTENT IN EXCAVATED MATERIALS AND/OR PERMEABILITIES RATES
   - B. DEPTH OF CUT IN PONDS, TRENCHES, OR UTILITY LINES
   - C. AMBIENT GROUND WATER LEVELS
   - D. ACTUAL RAINFALL AMOUNTS AND TIME OF YEAR RELATIVE TO NORMAL RAINY SEASON
   - E. PROXIMITY TO WETLANDS, WATER BODIES OR OFFSITE PROPERTIES
   - F. 'CLASS' DESIGNATION OF RECEIVING WATER BODIES (I.E., OUTSTANDING FLORIDA WATERS, SHELLFISH HARVESTING AREAS, ETC.)
   - G. DENSITY, TYPE, AND PROXIMITY OF UPLAND VEGETATION TO BE RETAINED DURING CONSTRUCTION (FOR USE AS POSSIBLE FILTRATION AREAS)
   - H. FILL HEIGHT RELATIVE TO NATURAL GRADE AND LENGTH AND STEEPNESS OF THE PROPOSED SLOPES
   - I. EXISTING TOPOGRAPHY AND DIRECTIONS OF SURFACE FLOW
   - J. TYPE OF EQUIPMENT USED
   - K. PROJECT TYPE
   - L. DURATION OF CONSTRUCTION ACTIVITIES
   - M. SEPARATION DISTANCE OF ONSITE PONDS
   - N. AMBIENT QUALITY OF SURFACE AND GROUNDWATER
   - O. TEMPORARY STOCKPILE LOCATIONS AND HEIGHTS
4. AT THE ONSET OF CONSTRUCTION, THE SITE SUBCONTRACTOR, AS THE PARTY RESPONSIBLE FOR IMPLEMENTATION OF THE EROSION AND SEDIMENT CONTROL PLAN, SHALL ASSESS THE ABOVE DESCRIBED CONDITIONS AND FACTORS WITH RESPECT TO RELATIVE COST EFFECTIVENESS AND SELECT THE APPROPRIATE METHODS OF PROTECTION. A FAIRLY EXTENSIVE LIST OF TECHNIQUES ARE PRESENTED BELOW BUT IT MUST BE STRESSED THAT ANY OR ALL OF THE FOLLOWING MAY BE NECESSARY TO MAINTAIN WATER QUALITY AND QUANTITY STANDARDS. THE CONSTRUCTION SEQUENCING SHOULD BE THOUGHT OUT IN ADVANCE OF INITIATION TO PROVIDE ADEQUATE PROTECTION OF WATER QUALITY.
5. DISCHARGES WHICH EXCEED 29 N.T.U.'S OVER THE BACKGROUND LEVELS ARE IN VIOLATION OF STATE WATER QUALITY STANDARDS. DISCHARGES OF WATER QUANTITIES WHICH AFFECT OFFSITE PROPERTIES OR MAY DAMAGE WETLANDS ARE ALSO PROHIBITED BY REGULATING AGENCIES.
6. THE EROSION AND TURBIDITY CONTROL MEASURES SHOWN HEREON ARE THE MINIMUM REQUIRED FOR AGENCY APPROVAL. ADDITIONAL CONTROL AND MEASURES MAY BE REQUIRED DUE TO THE SITE SUBCONTRACTOR'S CONSTRUCTION SEQUENCE & UNFORESEEN WEATHER CONDITIONS. ANY ADDITIONAL MEASURES DEEMED NECESSARY BY THE SITE SUBCONTRACTOR SHALL BE INCLUDED IN THE LUMP SUM BID WITH NO EXTRAS FOR MATERIALS AND LABOR ALLOWED.
7. HAY BALES OR SILT SCREENS SHALL BE INSTALLED PRIOR TO LAND CLEARING TO PROTECT WATER QUALITY AND TO IDENTIFY AREAS TO BE PROTECTED FROM CLEARING ACTIVITIES AND MAINTAINED FOR THE DURATION OF THE PROJECT UNTIL ALL SOIL IS STABILIZED.
8. FLOATING TURBIDITY BARRIERS SHALL BE IN PLACE IN FLOWING SYSTEMS OR IN OPEN WATER LAKE EDGES PRIOR TO INITIATION OF EARTHWORK AND MAINTAINED FOR THE DURATION OF THE PROJECT UNTIL ALL SOIL IS STABILIZED.
9. NO CLAY MATERIAL SHALL BE LEFT EXPOSED IN ANY STORMWATER STORAGE FACILITY. IF CLAY OR SANDY-CLAYS ARE ENCOUNTERED DURING STORMWATER STORAGE EXCAVATION, THE SITE SUBCONTRACTOR SHALL NOTIFY THE ENGINEER IMMEDIATELY BEFORE PROCEEDING WITH FURTHER EXCAVATION. IF THE ENGINEER OF RECORD HAS DETERMINED THAT SUCH SOILS ARE NON-CONFINING AND MUST BE EXCAVATED TO MEET PERMIT AND DESIGN CONDITIONS, EXCAVATION MAY PROCEED AFTER OBTAINING WRITTEN AUTHORIZATION FROM THE APPROPRIATE GOVERNING AGENCY. IF SAID SOILS ARE LEFT EXPOSED AT THE PERMITTED AND DESIGNED DEPTH, THE SITE SUBCONTRACTOR SHALL OVER-EXCAVATE THE POND'S BOTTOM AND SIDE SLOPES BY A MINIMUM OF TWELVE (12") INCHES AND BACKFILL WITH CLEAN SANDS TO HELP PREVENT SUSPENSION OF FINE PARTICLES IN THE WATER COLUMN.
10. THE INSTALLATION OF TEMPORARY EROSION CONTROL BARRIERS SHALL BE COORDINATED WITH THE CONSTRUCTION OF THE PERMANENT EROSION CONTROL FEATURES TO THE EXTENT NECESSARY TO ASSURE EFFECTIVE AND CONTINUOUS CONTROL OF EROSION AND WATER POLLUTION THROUGHOUT THE LIFE OF THE CONSTRUCTION PHASE.
11. THE TYPE OF EROSION CONTROL BARRIERS USED SHALL BE GOVERNED BY THE NATURE OF THE CONSTRUCTION OPERATION AND SOIL TYPE THAT WILL BE EXPOSED. SILTY AND CLAYEY MATERIAL MAY REQUIRE SOLID SEDIMENT BARRIERS TO PREVENT TURBID WATER DISCHARGE, WHILE SANDY MATERIAL MAY NEED ONLY SILT SCREENS OR HAY BALES TO PREVENT EROSION. FLOATING TURBIDITY CURTAINS SHOULD GENERALLY BE USED IN OPEN WATER SITUATIONS. DIVERSION DITCHES OR SWALES MAY BE REQUIRED TO PREVENT TURBID STORMWATER RUNOFF FROM BEING DISCHARGED TO WETLANDS OR OTHER WATER BODIES. IT MAY BE NECESSARY TO EMPLOY A COMBINATION OF BARRIERS, DITCHES, AND OTHER EROSION/TURBIDITY CONTROL MEASURES IF CONDITIONS WARRANT.
12. WHERE PUMPS ARE TO BE USED TO REMOVE TURBID WATERS FROM CONSTRUCTION AREAS, THE WATER SHALL BE TREATED PRIOR TO DISCHARGE TO THE WETLANDS. TREATMENT METHODS INCLUDE, FOR EXAMPLE, TURBID WATER BEING PUMPED INTO GRASSED SWALES OR APPROPRIATE UPLAND VEGETATED AREAS (OTHER THAN UPLAND PRESERVATION AREAS AND WETLAND BUFFERS), SEDIMENT BASINS, OR CONFINED BY AN APPROPRIATE ENCLOSURE SUCH AS TURBIDITY BARRIERS OR LOW BERMS, AND KEPT CONFINED UNTIL TURBIDITY LEVELS MEET STATE WATER QUALITY STANDARDS.
13. THE PERMITTEE SHALL SCHEDULE HIS OPERATIONS SUCH THAT THE AREA OF UNPROTECTED ERODIBLE EARTH EXPOSED AT ANY ONE TIME IS NOT LARGER THAN THE MINIMUM AREA NECESSARY FOR EFFICIENT CONSTRUCTION OPERATION, AND THE DURATION OF EXPOSED, UNCOMPLETED CONSTRUCTION TO THE ELEMENTS SHALL BE AS SHORT AS PRACTICABLE. CLEARING AND GRUBBING SHALL BE SO SCHEDULED AND PERFORMED SUCH THAT GRADING OPERATIONS CAN FOLLOW IMMEDIATELY THEREAFTER. GRADING OPERATIONS SHALL BE SO SCHEDULED AND PERFORMED THAT PERMANENT EROSION CONTROL FEATURES CAN FOLLOW IMMEDIATELY THEREAFTER IF CONDITIONS ON THE PROJECT PERMIT.
14. WATER DERIVED FROM VARIOUS DEWATERING METHODS SHOULD BE PASSED THROUGH SUFFICIENTLY WIDE AREAS OF EXISTING UPLAND VEGETATION TO FILTER OUT EXCESS TURBIDITY. IF THIS IS NOT SUFFICIENT, THE WATER SHALL BE RETAINED IN PREVIOUSLY CONSTRUCTED PERMANENT STORMWATER PONDS OR ELSE RETAINED IN TEMPORARY SEDIMENTATION BASINS UNTIL THE CLARITY IS SUITABLE TO ALLOW FOR ITS DISCHARGE. PLUGGING THE OUTFALLS FROM COMPLETED STORMWATER PONDS MAY BE NEEDED TO AVOID DISCHARGE. HOWEVER, SUCH SITUATIONS SHOULD BE MONITORED CLOSELY TO PRECLUDE BERM FAILURE IF WATER LEVELS RISE TOO HIGH.
15. WATER CAN BE TRANSPORTED AROUND THE SITE BY THE USE OF INTERNAL SWALES OR BY PUMPS AND PIPES.
16. SHEET FLOW OF NEWLY FILLED OR SCRAPED AREAS MAY BE CONTROLLED OR CONTAINED BY THE USE OF BRUSH BARRIERS, DIVERSION SWALES, INTERCEPTOR DITCHES OR LOW BERMS. FLOW SHOULD BE DIRECTED TOWARD AREAS WHERE SEDIMENTS CAN SUFFICIENTLY SETTLE OUT.
17. EXPOSED SOILS SHALL BE STABILIZED AS SOON AS POSSIBLE, ESPECIALLY SLOPES LEADING TO WETLANDS. STABILIZATION METHODS INCLUDE SOLID SOD, SEEDING AND MULCHING OR HYDROMULCHING TO PROVIDE A TEMPORARY OR PERMANENT GRASS COVER MULCH BLANKETS, FILTER FABRICS, ETC., CAN BE EMPLOYED TO PROVIDE VEGETATIVE COVER.
18. ENERGY DISSIPATERS (SUCH AS RIP RAP, A GRAVEL BED, HAY BALES, ETC.) SHALL BE INSTALLED AT THE DISCHARGE POINT OF PIPES OR SWALES IF SCOURING IS OBSERVED.
19. ATTEMPT TO INSTALL ROADWAY CURB AND GUTTERS AS SOON AS POSSIBLE TO REDUCE THE SURFACE AREA FOR EROSION TO OCCUR.
20. IMPLEMENT STORM DRAIN INLET PROTECTION (HAY BALES OR GRAVEL) TO LIMIT SEDIMENTATION WITHIN THE STORMWATER SYSTEM. PERFORM INSPECTIONS AND PERIODIC CLEANING OF SEDIMENTS WHICH WASH OUT INTO THE STREETS UNTIL ALL SOIL IS STABILIZED.
21. WATER DISCHARGE VELOCITIES FROM IMPOUNDED AREAS AND TEMPORARY SEDIMENTATION BASINS SHALL BE RESTRICTED TO AVOID SCOURING IN RECEIVING AREAS.
22. IF WATER CLARITY DOES NOT REDUCE TO STATE STANDARDS RAPIDLY ENOUGH IN HOLDING PONDS, IT MAY BE POSSIBLE TO USE CHEMICAL AGENTS SUCH AS ALUM TO FLOCCULATE OR COAGULATE THE SEDIMENT PARTICLES.
23. HAY BALES, SILT SCREENS, OR GRAVEL BEDS CAN BE ADDED AROUND THE PIPE OR SWALE DISCHARGE POINTS TO HELP CLARIFY DISCHARGES. SPREADER SWALES MAY HELP DISSIPATE CLOUDY WATER PRIOR TO CONTACT WITH WETLANDS.
24. ALL FUEL STORAGE AREAS OR OTHER HAZARDOUS STORAGE AREAS SHALL CONFORM TO ACCEPTED STATE OR FEDERAL CRITERIA FOR SUCH CONTAINMENT AREAS.
25. VEHICLE OR EQUIPMENT WASHDOWN AREAS WILL BE SUFFICIENTLY REMOVED FROM WETLANDS OR OFFSITE AREAS.
26. FUGITIVE DUST CONTROLS (PRIMARILY BY USING WATER SPRAY TRUCKS) SHALL BE EMPLOYED AS NEEDED TO CONTROL WINDBORN EMISSIONS.
27. IF THE ABOVE CONTROLS REMAIN INEFFECTIVE IN PRECLUDING RELEASE OF TURBID WATER, ESPECIALLY DURING POND OR UTILITY LINE DEWATERING, THEN THE CONTRACTOR MAY BE COMPELLED TO USE A VERTICAL DEWATERING SYSTEM SUCH AS WELL POINTS OR SOCK DRAINS TO WITHDRAW GROUNDWATER WHICH MAY ALREADY BE CLEAR ENOUGH TO ALLOW FOR DIRECT DISCHARGE TO WETLANDS.
28. ONGOING INSPECTIONS AND PERIODIC MAINTENANCE BY THE SITE SUBCONTRACTOR SHALL OCCUR THROUGHOUT CONSTRUCTION AS NECESSARY TO INSURE THE ABOVE METHODS ARE WORKING SUITABLY. THIS MAY BE NEEDED DAILY, IF CONDITIONS SO WARRANT. SITE SUBCONTRACTORS ARE ENCOURAGED TO OBTAIN AND THOROUGHLY REVIEW THE FLORIDA DEVELOPMENT MANUAL: A GUIDE TO SOUND LAND AND WATER MANAGEMENT, WHICH WAS DEVELOPED BY THE STATE OF FLORIDA DEPARTMENT OF ENVIRONMENTAL PROTECTION IN 1988. THIS PROVIDES FAIRLY IN-DEPTH DISCUSSIONS OF RECOMMENDED TECHNIQUES AND ALSO PROVIDES SPECIFIC DESIGN AND TECHNICAL STANDARDS. A COPY OF THIS DOCUMENT IS AVAILABLE FOR REVIEW AT HEIDT DESIGN, LLC.
29. THE CONTRACTOR WILL PERFORM DAILY INSPECTIONS OF ALL ON-SITE WETLANDS WITHIN THE CONSTRUCTION AREA TO ENSURE THAT WATER LEVELS WITHIN THOSE WETLANDS ARE NOT EXCESSIVELY IMPOUNDED PRIOR TO THE TIME WHEN THE PERMITTED CONTROL STRUCTURE OR OUTFALL IS BUILT. WATER LEVELS SIGNIFICANTLY ABOVE NORMAL SHOULD BE CORRECTED AT A FREQUENCY THAT PREVENTS A CHANGE IN THE VEGETATIVE CHARACTER OR HEALTH OF ANY WETLANDS.

SOIL REUSE REQUIREMENTS

AT LEAST THE FOLLOWING SIX (6) TYPES OF MATERIALS ARE PRESENT ON-SITE THAT REQUIRE PROPER HANDLING/TREATMENT BY THE CONTRACTOR, DURING THE COURSE OF SITE DEVELOPMENT/CONSTRUCTION ACTIVITIES, IN ACCORDANCE WITH THE NOTED REUSE REQUIREMENTS FOR EACH TYPE. ALTHOUGH SOME SOIL MATERIAL QUALITY CONTROL TESTING WILL BE RANDOMLY AND PERIODICALLY PERFORMED BY THE PROJECT GEOTECHNICAL CONSULTANT, AS REQUIRED, WORKING FOR THE OWNER, IT IS THE CONTRACTORS SOLE RESPONSIBILITY TO REUSE ONSITE SOIL MATERIALS AS DESCRIBED AND SPECIFIED BELOW. ALL DISCOVERED OR FUTURE FILLING OR MATERIAL REUSE WORK ONSITE NOT IN ACCORDANCE OR COMPLIANCE WITH THESE NOTES, OR ANY FUTURE ADVERSE IMPACTS OR CONSEQUENCES RESULTING FROM THE CONTRACTORS FAILURE TO PROPERLY REUSE SOIL MATERIALS ONSITE AS SPECIFICALLY DESCRIBED BELOW, WILL BE THE CONTRACTORS SOLE RESPONSIBILITY FOR REMEDY AND REPAIR AT HIS COST. IF THE CONTRACTOR HAS ANY QUESTIONS REGARDING ANY OF THE SOIL MATERIALS ONSITE, THE PROJECT GEOTECHNICAL REPORTS (WHICH HE NEEDS TO OBTAIN FROM THE OWNER OR GEOTECHNICAL CONSULTANT/ ENGINEER), OR ANY QUESTIONS ASSOCIATED WITH THE NOTES BELOW, IT IS PRESUMED THAT THE CONTRACTOR WILL SATISFACTORILY RESOLVE SUCH QUESTIONS/CONCERNS PRIOR TO SITE DEMOLITION, CLEARING, GRUBBING, STRIPPING AND EXCAVATION OPERATIONS BEGIN.

PLEASE NOTE, LOCAL, STATE AND FEDERAL RULES, LAWS, AND REGULATIONS PROHIBITING SOIL REUSE AS DESCRIBED BELOW SHALL TAKE PRECEDENCE AND SHALL BE FOLLOWED TO THE FULLEST EXTENT.

1. SITE DEMOLITION DEBRIS (SITE DEMOLITION DEBRIS, NOT GENERALLY CONSIDERED AN ENVIRONMENTAL/CONTAMINATION HAZARD, INCLUDES SUCH ITEMS AS WOOD PIECES, CONCRETE PIECES, PLASTIC PIPE PIECES, CERTAIN METAL/STEEL PIECES, OR SIMILAR. IF ANY SUCH DEBRIS OR OTHER DEMOLITION DEBRIS IS CONSIDERED AN ENVIRONMENTAL/CONTAMINATION HAZARD, OR IF BURIAL ONSITE OF SUCH MATERIALS IS PROHIBITED BY THE GOVERNING ENVIRONMENTAL AGENCY, THEN ALL SUCH MATERIALS SHALL BE HAULED OFF SITE BY THE CONTRACTOR FOR PROPER DISPOSAL, IN ACCORDANCE WITH ALL APPLICABLE GOVERNING ENVIRONMENTAL AGENCY REQUIREMENTS. IN NO CASE, SHALL ANY SUCH DEBRIS MATERIALS REMAIN, OR BE PLACED BY THE CONTRACTOR, BENEATH ANY TYPE OF STRUCTURE, PAVEMENT, ROADWAY, HOUSE, BUILDING,PIPELINE, SLAB, ETC.)

ALL SITE DEMOLITION DEBRIS SHALL BE REMOVED FROM THE SITE DEVELOPMENT AND DISPOSED OF PROPERLY IN ACCORDANCE WITH ALL APPLICABLE GOVERNING ENVIRONMENTAL AGENCY REQUIREMENTS.

2. CLEARING AND GRUBBING DEBRIS (SITE CLEARING AND GRUBBING DEBRIS INCLUDES ALL LARGER ORGANIC MATERIALS, SUCH ITEMS AS TREES, STUMPS, LIMBS, BRUSH, VEGETATION, OR SIMILAR; ALL SUCH MATERIALS MUST BE EITHER "BURNED" OR "MULCHED" BY THE CONTRACTOR PRIOR TO REUSE OR DISPOSAL ONSITE.)

IF ACCEPTABLE TO THE GOVERNING ENVIRONMENTAL AGENCY, THEN ALL SUCH "BURNED" OR "MULCHED" SITE CLEARING/GRUBBING DEBRIS, IF APPROVED IN WRITING FIRST BY THE OWNER/GEOTECHNICAL CONSULTANT/ ENGINEER, COULD BE:

A). PLACED AS "MULCH" MATERIAL SURFACE DRESSING IN FUTURE LANDSCAPE AREAS, STOCKPILING OF SUCH"MULCHED" MATERIALS (AMOUNTS/LOCATIONS), IF ACCEPTABLE, WILL BE DIRECTED BY THE OWNER/GEOTECHNICAL CONSULTANT//LANDSCAPE ARCHITECT/ENGINEER;

B). PLACED IN TEMPORARILY EXCAVATED LITTORAL SHELF AREAS IN SELECTED STORMWATER PONDS, OR IN TEMPORARILY EXCAVATED SELECTED WETLAND MITIGATION PONDS, IN EITHER CASE NOT IN SIDE BANKS AND NOT BELOW THE PERMITTED DESIGN DEPTH OF THE POND, OR SUCH DEBRIS COULD BE BURIED IN TEMPORARILY EXCAVATED PASSIVE RECREATION/PARK AREAS (AT LEAST 30 FEET FROM ANY STRUCTURE) AT APPROVED DEPTHS/LOCATIONS, BUT ALL THESE DISPOSAL AREAS WILL REQUIRE ADEQUATE SOIL MIXING (MIX SOIL WITH THE MULCH) AND THEN REFILLING (WITH COMPACTION) TO REQUIRED DESIGN GRADES;

C). PLACED ALONG THE BOTTOM OF SELECTED FLOODPLAIN MITIGATION PONDS (NOT IN SIDE BANKS), NOT BELOW THE PERMITTED EXCAVATION DEPTH OF THE POND, BUT WILL REQUIRE ADEQUATE SOIL COVER;

D). PLACED ALONG THE BOTTOM OF SELECTED DEEPER STORMWATER PONDS (NOT IN SIDE BANKS), NOT BELOW THE PERMITTED DESIGN DEPTH, BUT WILL REQUIRE ADEQUATE SOIL COVER.

IN ALL INSTANCES, THE MINIMUM POND DEPTH (INCLUDING FLOODPLAIN AND WETLAND MITIGATION AREAS) SHALL BE NO LESS THAN REQUIRED BY THE ENGINEER.

ALL ORGANIC DEBRIS BURIAL AREAS IN STORMWATER POND AREAS AND FLOODPLAIN MITIGATION POND AREAS WILL REQUIRE ADEQUATE SOIL COVER OF 18 - 24 INCHES (WITH COMPACTION) BY THE CONTRACTOR, MEANING AT LEAST AN ADEQUATE WEIGHT/THICKNESS OF SOIL MATERIAL OVERTOP THE BURIED ORGANIC DEBRIS, SUCH THAT THERE WILL BE NO FUTURE FLOATING UP OF DEBRIS; AND FOR ALL ORGANIC DEBRIS BURIAL AREAS IN LITTORAL SHELF AREAS, WETLAND MITIGATION POND AREAS, AND PASSIVE RECREATION/PARK AREAS, ADEQUATE SOIL/MULCH MIXING (WITH COMPACTION) WILL BE NECESSARY BY THE CONTRACTOR, SUCH THAT NO SIGNIFICANT FUTURE UNACCEPTABLE SETTLEMENT OF A LITTORAL SHELF AREA, CREATED WETLAND AREA, OR PARK/GRASSED AREA WILL OCCUR.

IF ANY OF THESE PROCEDURES ARE CONTEMPLATED BY THE CONTRACTOR, THEN THE CONTRACTOR SHALL NOTIFY THE OWNER/GEOTECHNICAL CONSULTANT/ENGINEER IN WRITING, AT THE START OF CONSTRUCTION, WITH SOME SPECIFIC INFORMATION, INCLUDING THE ESTIMATED QUANTITY AND TYPES OF MATERIALS, TO WHICH STORMWATER PONDS, FLOODPLAIN MITIGATION PONDS, WETLAND MITIGATION PONDS, OR PASSIVE RECREATION/PARK AREAS THEY PROPOSE TO USE FOR THIS TYPE OF ORGANIC DEBRIS DISPOSAL, AND WHAT APPROXIMATE ELEVATIONS WILL BE THE TOP AND BOTTOM OF THE ORGANIC DEBRIS.

3. MUCK/PEAT ORGANIC MATERIALS (TYPICALLY GENERATED FROM WETLAND OR LOWLAND AREAS, OR SIMILAR AREAS, PERMITTED FOR IMPACT OR DISPLACEMENT, INCLUDING EXCAVATION OF UNSUITABLE ORGANIC MATERIALS AND REFILLING WITH SUITABLE SANDY SOILS TO ACCOMMODATE DEVELOPMENT; INCLUDES SIGNIFICANT ORGANIC PEAT MATERIALS, ORGANIC SANDY MUCK MATERIALS, AND MUCKY OR ORGANIC SAND MATERIALS, DESIGNATED EITHER PT OR A-8, PER THE UNIFIED AND AASHTO SOIL CLASSIFICATION SYSTEMS, RESPECTIVELY; THOSE ORGANIC MATERIALS WHOSE PRESENCE, OR PLACEMENT BY THE CONTRACTOR, IS UNACCEPTABLE BENEATH ANY TYPE OF STRUCTURE, PAVEMENT, ROADWAY, HOUSE, BUILDING, PIPELINE, SLAB, ETC.)

IF ACCEPTABLE TO THE GOVERNING ENVIRONMENTAL AGENCY, THEN ALL SUCH MUCK/PEAT (SIGNIFICANT) ORGANIC MATERIALS, IF APPROVED IN WRITING FIRST BY THE OWNER/GEOTECHNICAL CONSULTANT/ENGINEER,COULD BE:

A). PLACED AS "PEAT/MUCK/ORGANIC MATTER" SURFACE LAYER IN NEW OR CREATED WETLAND MITIGATION AREAS, STOCKPILING OF SUCH "SIGNIFICANT ORGANIC" MATERIALS (AMOUNTS/LOCATIONS), IF ACCEPTABLE, WILL BE DIRECTED BY THE OWNER/WETLAND CONSULTANT;

B). PLACED IN TEMPORARILY EXCAVATED LITTORAL SHELF AREAS IN SELECTED STORMWATER PONDS, OR IN TEMPORARILY EXCAVATED SELECTED WETLAND MITIGATION PONDS, IN EITHER CASE NOT IN SIDE BANKS AND NOT BELOW THE PERMITTED DESIGN DEPTH OF THE POND, OR SUCH ORGANIC MATERIALS COULD BE BURIED IN TEMPORARILY EXCAVATED PASSIVE RECREATION/PARK AREAS (AT LEAST 30 FEET FROM ANY STRUCTURE) AT APPROVED DEPTHS/LOCATIONS, BUT ALL THESE DISPOSAL AREAS WILL REQUIRE ADEQUATE SOIL MIXING (MIX SOIL WITH THE ORGANIC MATERIALS) AND THEN REFILLING (WITH COMPACTION) TO REQUIRED DESIGN GRADES;

C). PLACED ALONG THE BOTTOM OF SELECTED FLOODPLAIN MITIGATION PONDS (NOT IN SIDE BANKS), NOT BELOW THE PERMITTED EXCAVATION DEPTH OF THE POND, BUT WILL REQUIRE ADEQUATE SOIL COVER;

D.) PLACED ALONG THE BOTTOM OF SELECTED DEEPER STORMWATER PONDS (NOT IN SIDE BANKS), NOT BELOW THE PERMITTED DESIGN DEPTH, BUT WILL REQUIRE ADEQUATE SOIL COVER.

ALL ORGANIC DEBRIS BURIAL AREAS IN STORMWATER POND AREAS AND FLOODPLAIN MITIGATION POND AREAS WILL REQUIRE ADEQUATE SOIL COVER (WITH COMPACTION) BY THE CONTRACTOR, MEANING AT LEAST AN ADEQUATE WEIGHT/THICKNESS OF SOIL MATERIAL OVERTOP THE BURIED ORGANIC DEBRIS, SUCH THAT THERE WILL BE NO FUTURE FLOATING UP OF DEBRIS; AND FOR ALL ORGANIC DEBRIS BURIAL AREAS IN LITTORAL SHELF AREAS, WETLAND MITIGATION POND AREAS, AND PASSIVE RECREATION/PARK AREAS, ADEQUATE SOIL/ORGANICS MIXING (WITH COMPACTION) WILL BE NECESSARY BY THE CONTRACTOR, SUCH THAT NO SIGNIFICANT FUTURE UNACCEPTABLE SETTLEMENT OF A LITTORAL SHELF AREA, CREATED WETLAND AREA, OR PARK/GRASSED AREA WILL OCCUR.

IF ANY OF THESE PROCEDURES ARE CONTEMPLATED BY THE CONTRACTOR, THEN THE CONTRACTOR SHALL NOTIFY THE OWNER/GEOTECHNICAL CONSULTANT/ENGINEER IN WRITING, AT THE START OF CONSTRUCTION, WITH SOME SPECIFIC INFORMATION, INCLUDING THE ESTIMATED QUANTITY AND TYPES OF MATERIALS, TO WHICH STORMWATER PONDS, FLOODPLAIN MITIGATION PONDS, WETLAND MITIGATION PONDS, OR PASSIVE RECREATION/PARK/LANDSCAPE BERM AREAS THEY PROPOSE TO USE FOR THIS TYPE OF ORGANIC MATERIAL DISPOSAL, AND WHAT APPROXIMATE ELEVATIONS WILL BE THE TOP AND BOTTOM OF THE ORGANIC MATERIALS.

4. TOPSOILS/SITE STRIPPINGS (TYPICALLY GENERATED FROM UPLAND AREAS, AFTER DEMOLITION/CLEARING/GRUBBING/DISCING OPERATIONS; STRIPPING OF SURFICIAL ORGANICS/TOPSOILS BEING A REQUIREMENT OVER AT LEAST ALL STRUCTURE, BUILDING, CONCRETE SLAB AND PAVEMENT AREAS PRIOR TO FILLING TO ACCOMMODATE DEVELOPMENT; INCLUDES TOPSOILS AND ORGANIC LADEN SANDS; THOSE TOPSOILS/ORGANIC SAND MATERIALS WHOSE PRESENCE, OR PLACEMENT BY THE CONTRACTOR, IS UNACCEPTABLE BENEATH ANY TYPE OF STRUCTURE, PAVEMENT, ROADWAY, HOUSE, BUILDING, PIPELINE, SLAB, ETC.)

IF ACCEPTABLE TO THE GOVERNING ENVIRONMENTAL AGENCY, ALL SUCH TOPSOILS/ORGANIC LADEN SAND MATERIALS, IF APPROVED IN WRITING FIRST BY THE OWNER/GEOTECHNICAL CONSULTANT/ENGINEER, COULD BE:

A). PLACED AS FILL IN NEW (LARGER) LANDSCAPE/GRASS COMMON AREAS OR LANDSCAPE BERM AREAS (WITH COMPACTION), STOCKPILING OF SUCH "TOPSOILS/ORGANIC LADEN SAND MATERIALS" (AMOUNTS/LOCATIONS), IF ACCEPTABLE, WILL BE DIRECTED BY THE OWNER/LANDSCAPE CONSULTANT;

B). PLACED IN TEMPORARILY EXCAVATED LITTORAL SHELF AREAS IN SELECTED STORMWATER PONDS, OR IN TEMPORARILY EXCAVATED SELECTED WETLAND MITIGATION PONDS, IN EITHER CASE NOT IN SIDE BANKS AND NOT BELOW THE PERMITTED DESIGN DEPTH OF THE POND, OR SUCH TOPSOILS/ORGANIC LADEN SAND MATERIALS COULD BE BURIED IN TEMPORARILY EXCAVATED PASSIVE RECREATION/PARK AREAS (AT LEAST 30 FEET FROM ANY STRUCTURE) AT APPROVED DEPTHS/LOCATIONS, BUT ALL THESE DISPOSAL AREAS WILL REQUIRE REFILLING (WITH COMPACTION) TO REQUIRED DESIGN GRADES;

C). PLACED ALONG THE BOTTOM OF SELECTED FLOODPLAIN MITIGATION PONDS (NOT IN SIDE BANKS), NOT BELOW THE PERMITTED EXCAVATION DEPTH OF THE POND;

D.) PLACED ALONG THE BOTTOM OF SELECTED DEEPER STORMWATER PONDS (NOT IN SIDE BANKS), NOT BELOW THE PERMITTED DESIGN DEPTH.

ALL TOPSOIL/ORGANIC LADEN SAND DISPOSAL AREAS IN LITTORAL SHELF AREAS, WETLAND MITIGATION POND AREAS, PASSIVE RECREATION/PARK AREAS, OR LANDSCAPE/BERM AREAS WILL REQUIRE ADEQUATE COMPACTION BY THE CONTRACTOR, SUCH THAT NO SIGNIFICANT FUTURE UNACCEPTABLE SETTLEMENT OF A LITTORAL SHELF AREA, CREATED WETLAND AREA, PARK/GRASSED AREA, OR LANDSCAPE BERM WILL OCCUR.

IF ANY OF THESE PROCEDURES ARE CONTEMPLATED BY THE CONTRACTOR, THEN THE CONTRACTOR SHALL NOTIFY THE OWNER/GEOTECHNICAL CONSULTANT/ENGINEER IN WRITING, AT THE START OF CONSTRUCTION, WITH SOME SPECIFIC INFORMATION, INCLUDING THE ESTIMATED QUANTITY AND TYPES OF MATERIALS, TO WHICH STORMWATER PONDS, FLOODPLAIN MITIGATION PONDS, WETLAND MITIGATION PONDS, PASSIVE RECREATION/PARK AREAS, OR LANDSCAPE BERM AREAS THEY PROPOSE TO USE FOR THIS TYPE OF ORGANIC DEBRIS DISPOSAL, AND WHAT APPROXIMATE ELEVATIONS WILL BE THE TOP AND BOTTOM OF THE ORGANIC DEBRIS.

5. NON-STRUCTURAL CLAYEY SAND/CLAY MATERIALS (TYPICALLY GENERATED FROM POND/LAKE EXCAVATIONS OR FROM UTILITY PIPELINE/MANHOLE EXCAVATIONS; SUCH CLAYEY SAND/CLAY MATERIALS, WITH TYPICALLY 40% FINES OR MORE PASSING THE NO. 200 SIEVE, DESIGNATED EITHER SC, CL, CH OR A-4 TO A-7, PER THE UNIFIED AND AASHTO SOIL CLASSIFICATION SYSTEMS, RESPECTIVELY; SUCH CLAYEY SAND/CLAY MATERIALS BEING UNSUITABLE OR UNACCEPTABLE FOR REUSE BY THE CONTRACTOR AS BUILDING PAD FILL, STRUCTURAL FILL, ROADWAY EMBANKMENT FILL, AND PIPELINE OR MANHOLE EXCAVATION BACKFILL.)

IF ACCEPTABLE TO THE GOVERNING ENVIRONMENTAL AGENCY, ALL SUCH CLAYEY SAND/CLAY MATERIALS, IF APPROVED IN WRITING FIRST BY THE OWNER/GEOTECHNICAL CONSULTANT/ENGINEER, COULD BE:

A). PLACED AS FILL IN NEW (LARGER) LANDSCAPE/GRASS COMMON AREAS OR LANDSCAPE BERM AREAS (WITH COMPACTION), PROVIDE SOME SURFACE DRAINAGE RELIEF, USE WHERE INFILTRATION AND DRAINAGE IS NOT AN IMPORTANT ISSUE, PROVIDE SOME SURFACE SANDY SOILS (MIN. OF 18-INCHES) AS DIRECTED BY THE LANDSCAPE CONSULTANT FOR PLANTING; STOCKPILING OF SUCH "CLAYEY SAND/CLAY MATERIALS" (AMOUNTS/LOCATIONS), IF ACCEPTABLE, WILL BE DIRECTED BY THE OWNER/LANDSCAPE CONSULTANT;

B). PLACED IN TEMPORARILY EXCAVATED LITTORAL SHELF AREAS IN SELECTED STORMWATER PONDS, OR IN TEMPORARILY EXCAVATED SELECTED WETLAND MITIGATION PONDS, IN EITHER CASE NOT IN SIDE BANKS AND NOT BELOW THE PERMITTED DESIGN DEPTH OF THE POND, OR SUCH CLAYEY SAND/CLAY MATERIALS COULD BE BURIED IN TEMPORARILY EXCAVATED PASSIVE RECREATION/PARK AREAS (AT LEAST 30 FEET FROM ANY STRUCTURE) AT APPROVED DEPTHS/LOCATIONS, BUT ALL THESE DISPOSAL AREAS WILL REQUIRE REFILLING (WITH COMPACTION) TO REQUIRED DESIGN GRADES, AND THE TOP 2 FEET (MIN.) BEING SAND MATERIALS (NOT CLAYEY MATERIALS) FOR TURBIDITY CONTROL AND PLANTING;

C). PLACED ALONG THE BOTTOM OF SELECTED FLOODPLAIN MITIGATION PONDS (NOT IN SIDE BANKS), NOT BELOW THE PERMITTED EXCAVATION DEPTH OF THE POND; HOWEVER, A 12-INCH LAYER (MIN.) OF SAND MATERIAL OVERTOP THE CLAYEY MATERIALS WILL BE NECESSARY FOR TURBIDITY CONTROL.

D.) PLACED ALONG THE BOTTOM OF SELECTED DEEPER STORMWATER PONDS (NOT IN SIDE BANKS), NOT BELOW THE PERMITTED DESIGN DEPTH, HOWEVER, A 12-INCH LAYER (MIN.) OF SAND MATERIAL OVERTOP THE CLAYEY MATERIALS WILL BE NECESSARY FOR TURBIDITY CONTROL.

ALL CLAYEY SAND/CLAY DISPOSAL AREAS IN LITTORAL SHELF AREAS, WETLAND MITIGATION POND AREAS, PASSIVE RECREATION/PARK AREAS, OR LANDSCAPE/BERM AREAS WILL REQUIRE ADEQUATE COMPACTION BY THE CONTRACTOR, SUCH THAT NO SIGNIFICANT FUTURE UNACCEPTABLE SETTLEMENT OF A LITTORAL SHELF AREA, CREATED WETLAND AREA, PARK/GRASSED AREA, OR LANDSCAPE BERM WILL OCCUR.

IF ANY OF THESE PROCEDURES ARE CONTEMPLATED BY THE CONTRACTOR, THEN THE CONTRACTOR SHALL NOTIFY THE OWNER/GEOTECHNICAL CONSULTANT/ENGINEER IN WRITING, AT THE START OF CONSTRUCTION, WITH SOME SPECIFIC INFORMATION, INCLUDING THE ESTIMATED QUANTITY AND TYPES OF MATERIALS, TO WHICH STORMWATER PONDS, FLOODPLAIN MITIGATION PONDS, WETLAND MITIGATION PONDS, PASSIVE RECREATION/PARK AREAS, OR LANDSCAPE BERM AREAS THEY PROPOSE TO USE FOR THIS TYPE OF CLAYEY SAND/CLAY DISPOSAL, AND WHAT APPROXIMATE ELEVATIONS WILL BE THE TOP AND BOTTOM OF THE CLAYEY MATERIALS.

6.) STRUCTURAL SAND FILL MATERIALS (TYPICALLY GENERATED FROM POND/LAKE EXCAVATIONS, CUT FROM HIGHER ELEVATION AREAS, OR FROM UTILITY PIPELINE/MANHOLE EXCAVATIONS; SUCH SAND MATERIALS, WITH TYPICALLY 35% FINES OR LESS PASSING THE NO. 200 SIEVE, DESIGNATED EITHER SP, SP-SM, SM OR A-2-4, A-2-6 OR A-3, PER THE UNIFIED AND AASHTO SOIL CLASSIFICATION SYSTEMS, RESPECTIVELY; SUCH SAND MATERIALS BEING SUITABLE OR ACCEPTABLE FOR REUSE BY THE CONTRACTOR AS BUILDING PAD FILL, STRUCTURAL FILL, ROADWAY EMBANKMENT FILL, AND PIPELINE OR MANHOLE EXCAVATION BACKFILL.)

ALL SUCH SAND MATERIALS SHALL BE REUSED ONSITE BY THE CONTRACTOR, PER THE GEOTECHNICAL REPORTS, AS BUILDING PAD FILL, STRUCTURAL FILL, ROADWAY EMBANKMENT FILL, AND PIPELINE OR MANHOLE EXCAVATION BACKFILL; PLACED BY THE CONTRACTOR IN LOOSE LIFTS NOT EXCEEDING 12-INCHES, COMPACTED TO AT LEAST 95% OR 98% MODIFIED PROCTOR (PER ASTM D-1557 OR AASHTO T-180), WHICHEVER IS APPLICABLE DEPENDING UPON THE FUTURE USE OF THE FILLED AREA (SEE GEOTECHNICAL REPORTS); WITH DENSITY TESTING OF EACH FILL LIFT FOR ACCEPTANCE BY THE GEOTECHNICAL CONSULTANT, UPON CONTRACTOR REQUEST, PRIOR TO THE NEXT FILL LIFT BEING PLACED.

GEOTECHNICAL NOTES:

A. SHOULD ANY NOTICEABLE SOIL SLUMPING OR SINKHOLE FORMATION BECOME EVIDENT, THE APPLICANT/DEVELOPER SHALL IMMEDIATELY NOTIFY THE COUNTY, TAMPA BAY WATER (TBW), AND SWFWMD, AND ADOPT ONE OR MORE OF THE FOLLOWING PROCEDURES AS DETERMINED TO BE APPROPRIATE BY THE COUNTY AND SWFWMD:

1. IF THE SLUMPING OR SINKHOLE FORMATION BECOMES EVIDENT BEFORE OR DURING CONSTRUCTION ACTIVITIES, STOP ALL WORK (EXCEPT FOR MITIGATION ACTIVITIES) IN THE AFFECTED AREA AND REMAIN STOPPED UNTIL THE COUNTY AND SWFWMD APPROVE RESUMING CONSTRUCTION ACTIVITIES.
2. TAKE IMMEDIATE MEASURES TO ENSURE NO SURFACE WATER DRAINS INTO THE AFFECTED AREAS.
3. VISUALLY INSPECT THE AFFECTED AREA.
4. EXCAVATE AND BACKFILL OR GROUT AS REQUIRED TO FILL THE AFFECTED AREA AND PREVENT FURTHER SUBSIDENCE.
5. USE SOIL REINFORCEMENT MATERIALS IN THE BACKFILLING OPERATION, WHEN APPROPRIATE.
6. IF THE AFFECTED AREA IS IN THE VICINITY OF A WATER-RETENTION AREA, MAINTAIN A MINIMUM DISTANCE OF TWO FEET FROM THE BOTTOM OF THE RETENTION POND TO THE SURFACE OF THE LIME-ROCK OR KARST CONNECTION.
7. IF THE AFFECTED AREA IS IN THE VICINITY OF A WATER-RETENTION AREA AND THE ABOVE METHODS DO NOT STABILIZE THE COLLAPSE, RELOCATED AREA.
8. DISCHARGE OF STORM-WATER INTO DEPRESSIONS WITH DIRECT OR DEMONSTRATED HYDROLOGIC CONNECTION TO THE FLORIDAN AQUIFER SHALL BE PROHIBITED.

SELECTED MATERIAL NOTE:

THE ENGINEER RESPONSIBLE FOR THE PROJECT SHALL CERTIFY TO THE COUNTY ENGINEERING SERVICES DIRECTOR (THRU PC ENGINEERING INSPECTIONS) THAT THE SELECT MATERIAL BELOW THE STABILIZED SUBGRADE MEETS THE STANDARDS PRIOR TO INSTALLATION OF THE BASE. CERTIFICATION SHALL STRICTLY COMPLY WITH THE SUBGRADE CERTIFICATION FROM AVAILABLE IN "ENGINEERING SERVICES DEPARTMENT: A PROCEDURAL GUIDE FOR THE PREPARATION OF ASSURANCES OF COMPLETION AND MAINTENANCE."

WETLAND NOTES:

"CONSERVATION AREA" DESIGNATION IS GIVEN TO ALL PROTECTED WETLANDS PER PASCO COUNTY REQUIREMENTS. THEY ARE NOT DESIGNATED AS "CONSERVATION EASEMENTS" FOR SWFWMD COMPENSATION.

WETLAND LINES PERMITTED UNDER ERP NO. 4302 8893.006

EARTHWORK NOTES:

1. ALL MATERIAL EXCAVATED FROM FLOODPLAIN AND STORMWATER DETENTION PONDS WILL BE REUSED AS FILL.

2. THERE WILL BE NO NET EARTHWORK EXPORT FROM THIS PROJECT.
   NET CUT= 38,355 C.Y.
   NET FILL= 59,920 C.Y.

UNDERDRAIN NOTES:

THE ENGINEER RESPONSIBLE FOR THE PROJECT SHALL CERTIFY TO COUNTY ENGINEERING SERVICES DIRECTOR THAT THE UNDERDRAINS HAVE BEEN PROPERLY INSTALLED PRIOR TO THE INSTALLATION OF ANY ASPHALT.

CERTIFICATION SHALL STRICTLY COMPLY WITH THE UNDERDRAIN CERTIFICATION FORM AVAILABLE IN ENGINEERING SERVICES DEPARTMENT: A PROCEDURAL GUIDE FOR THE PREPARATION OF ASSURANCE OF COMPLETION AND MAINTENANCE.

UNDERDRAIN SHALL BE MAINTAINED BY TSR CDD.

CONSTRUCTION COMPLETION NOTE:

UPON COMPLETION OF THE LAND DEVELOPMENT CONSTRUCTION, A PROFESSIONAL ENGINEER SHALL PROVIDE A CERTIFICATION TO PASCO COUNTY THAT THE PROJECT, INCLUDING EACH PAD AREA, COMPLIES WITH THE RECOMMENDATION OF THE GEOTECHNICAL/GEOLOGICAL ENGINEERING REPORT.

PERMIT NOTES:

1. AS APPLICABLE, THE OWNER/DEVELOPER WILL PROVIDE COPIES OF THE REQUIRED PERMITS FROM THE RESPECTIVE GOVERNING AGENCIES, PRIOR TO ISSUANCE OF THE SDP.
2. ALL WORK WITHIN THE ROW WILL REQUIRE A ROW USE PERMIT.

MISCELLANEOUS NOTES:

1. AS APPLICABLE, THE OWNER/DEVELOPER WILL PROVIDE COPIES OF THE REQUIRED PERMITS FROM THE RESPECTIVE GOVERNING AGENCIES, PRIOR TO ISSUANCE OF THE SDP.
2. ALL WORK WITHIN THE ROW WILL REQUIRE A ROW USE PERMIT.

CURB RAMP NOTE:

1. CURB RAMPS SHALL BE CONSTRUCTED PER FDOT INDEX 304

TURN OUT NOTE:

1. TURN OUT SHALL BE CONSTRUCTION PER FDOT INDEX 515

SIDEWALK NOTE:

1. SIDEWALKS SHALL BE CONSTRUCTED OF NATURAL OR COLORED CONCRETE AT LEAST 3,000 PSI IN STRENGTH, FIBER REINFORCED ON A COMPACTED AND NON-YIELDING SUBGRADE WITH MINIMUM OF FOUR INCHES IN THICKNESS. WHEN A SIDEWALK IS CROSSED BY A DRIVEWAY, THE MINIMUM THICKNESS SHALL BE 6 INCHES.
2. REFER TO SIDEWALK CLEAR ZONE DETAIL SHEET C-102:

ELEVATION DATA BASED ON:
NORTH AMERICAN VERTICAL DATUM 1988
CONVERSION:
NAVD 88 TO NGVD 29 = +0.85

HEIDT DESIGN
Civil Engineering • Planning & GIS
Transportation Engineering
Ecological Services • Landscape Architecture
Engineering Business Certificate of Authorization No. 28782
Landscape Architecture Certificate of Authorization No. LC26000405
5806-B Breckenridge Pkwy.
Tampa, Florida 33610
Office: 813-253-5311
Fax: 813-464-7629
www.HeidtDesign.com

RANGELAND BOULEVARD
WEST EXTENSION PHASE 2

GENERAL NOTES

PREPARED FOR: WS-TSR, LLC

	DATE	DESCRIPTION
1	12/30/2015	INITIAL REVIEW SUBMITTAL

PROJECT NO:	TSR SR 1072
FILE:	GNOTES
DESIGN BY:	MOORE
DRAWN BY:	JONES

FLORIDA PROFESSIONAL ENGINEER

GARY D. MILLER
DATE:_______________
REGISTRATION NO. 52717

C-101

R:\STARKEY RANCH\RANGELAND BLVD WEST EXT PHASE 2\ENGINEERING\GNOTES.DWG-C-101 2015/12/30 9:39 AM MARK JONES

©COPYRIGHT 2015, HEIDT DESIGN, LLC. ALL RIGHTS RESERVED. NO DOCUMENTATION (INCLUDING BUT NOT LIMITED TO DRAWINGS OR EXHIBITS) MAY BE COPIED, REPRODUCED, OR DISTRIBUTED UNLESS SPECIFIC WRITTEN PERMISSION HAS BEEN OBTAINED FROM HEIDT DESIGN, LLC. IN ADVANCE. CONSENT IS HEREBY GRANTED SPECIFICALLY TO GOVERNMENTAL AGENCIES TO REPRODUCE THIS DOCUMENTATION IN COMPLIANCE WITH F.S. CHAPTER 119.

WATER, SEWER & RECLAIMED WATER CONSTRUCTION NOTES:

1. PRIOR TO CONSTRUCTION, THE CONTRACTOR SHALL OBTAIN FROM THE ENGINEER OR OWNER A COPY OF ALL PERTINENT PERMITS RELATED TO THIS PROJECT. IT IS THE CONTRACTOR'S RESPONSIBILITY TO ASSURE THAT ALL CONSTRUCTION ACTIVITIES ARE IN COMPLIANCE WITH THE CONDITIONS OF ALL PERMITS AND APPROVALS.
2. SOLID SOD, ALL AREAS IN EXISTING RIGHTS-OF-WAY DISTURBED BY CONSTRUCTION.
3. CONTRACTOR IS TO COORDINATE ALL WORK WITHIN, BUT NOT LIMITED TO, PASCO COUNTY RIGHTS-OF-WAY WITH UTILITY COMPANIES IN ORDER TO PREVENT DAMAGE TO UTILITY LINES AND THE MAKING OF ADJUSTMENTS TO SAME, IF REQUIRED. IN ACCORDANCE WITH THE UNDERGROUND FACILITY DAMAGE PREVENTION AND SAFETY ACT (CHAPTER 556, F.S.) THE CONTRACTOR SHALL CALL THE SUNSHINE STATE ONE CALL OF FLORIDA (SSCOF) AT 1-800-432-4770 FORTY EIGHT (48) HOURS IN ADVANCE OF ANY EXCAVATION.
4. ALL UTILITY MATERIALS AND WORKMANSHIP MUST COMPLY WITH STANDARDS FOR DESIGN AND CONSTRUCTION OF WATER, WASTEWATER AND RECLAIMED WATER FACILITIES SPECS., JUNE 1995 EDITION.
5. FIRE HYDRANT, GATE VALVE AND BLOW-OFF VALVE ASSEMBLIES SHALL CONSIST OF ALL PIPE, VALVES, TEES, FITTINGS, AND ANY AND ALL OTHER APPURTENANCES COMPRISING A COMPLETE, WORKING UNIT.
6. ALL 4"-12" PVC WATER MAIN PIPE SHALL CONFORM TO THE REQUIREMENTS FOUND IN AWWA STANDARD C-900, LATEST EDITION AT THE TIME OF PLAN APPROVAL. ALL 16"-24" WATER MAIN SHALL BE C-905 DR 25 PVC. ALL SERVICE PIPE LESS THAN 4" IN DIAMETER SHALL BE PVC PRESSURE PIPE; PRESSURE RATE 200; DR 21 PER ASTM STANDARD D-2241. WATER MAINS SMALLER THAN 2" IN DIAMETER SHALL BE CLASS 1120 OR 1220; SCHEDULE 80 AND MEET THE REQUIREMENTS OF ASTM D-1785.
7. ALL WATER MAINS SHALL BE DEFLECTED VERTICALLY WHERE CROSSING STORM SEWER PIPE TO OBTAIN A MINIMUM VERTICAL DISTANCE OF 18 INCHES BETWEEN THE OUTSIDE OF THE WATER MAIN AND THE OUTSIDE OF THE STORM SEWER. JOINTS SHALL BE LOCATED SUCH THAT THE DISTANCE FROM THE STORM SEWER AND WATER MAIN JOINT IS AS FAR AS PRACTICAL.
8. WATER MAINS SHOULD BE LAID AT LEAST 10 FEET HORIZONTALLY FROM ANY EXISTING OR PROPOSED STORM SEWER.
9. AT NO TIME SHOULD VERTICAL CLEARANCE BETWEEN FORCE MAIN OR GRAVITY SEWER AND WATER MAIN BE LESS THAN 18" AT CROSSING OF SAME.
10. AT NO TIME SHOULD HORIZONTAL CLEARANCE BETWEEN FORCE MAIN OR GRAVITY SEWER AND WATER MAIN BE LESS THAN 10' WHEN SAME ARE PARALLELING EACH OTHER.
11. ADJUSTING MANHOLE TOPS TO MATCH GRADE AND SLOPE OF THE FINISH PAVING SHALL BE INCLUDED IN THE RESPECTIVE CONTRACT UNIT PRICE FOR MANHOLES, PAYMENT OF WHICH WILL CONSTITUTE FULL COMPENSATION FOR THE CONSTRUCTION AND COMPLETION OF THE MANHOLE, AND NO ADDITIONAL PAYMENT WILL BE ALLOWED OR MADE FOR ADJUSTING MANHOLE TOPS.
12. THE LOCATIONS AND ELEVATION OF ALL SERVICE LINES ARE TO BE DETERMINED IN THE FIELD BY OWNER AND/OR CONTRACTOR PRIOR TO CONSTRUCTION OF SAME.
13. BENDS SHALL BE INSTALLED IN FORCE MAIN OR WATER MAIN TO AVOID UNFORESEEN CONFLICTS IN EXISTING OR PROPOSED STRUCTURES.
14. THE JOINT DEFLECTION METHOD SHALL BE USED WHERE PRACTICAL IN LIEU OF INSTALLING BENDS.
15. CONTRACTOR SHALL VERIFY LOCATIONS AND DEPTHS OF EXISTING WATER AND SEWER LINES PRIOR TO BEGINNING CONSTRUCTION.
16. THE EXISTING UNDERGROUND UTILITY LINES SHOWN HEREON WERE TAKEN FROM DOCUMENTS FURNISHED BY OTHERS AND NOT FIELD VERIFIED, THEREFORE, THE ENGINEER CANNOT GUARANTEE THE ACCURACY OF SAME NOR THAT ALL ARE SHOWN. THE CONTRACTOR SHALL EXPOSE ALL UNDERGROUND UTILITY LINES IN COORDINATION WITH THE OWNERS TO HIS SATISFACTION AND MAKE ADJUSTMENTS TO SAME IN THE EVENT THERE ARE CONFLICTS WITH NEW CONSTRUCTION.
17. CONTRACTOR SHALL BE RESPONSIBLE FOR OBTAINING ANY AND ALL ROAD CROSSING OR UTILITY PERMITS.
18. ALL 8" GRAVITY SANITARY SEWER PIPE SHALL BE CONSTRUCTED AT A 0.40% MINIMUM SLOPE UNLESS OTHERWISE NOTED.
19. ALL VALVE BOX ASSEMBLIES LOCATED WITHIN ROADWAYS OR PARKING AREAS SHALL BE PROTECTED FROM TRUCK TRAFFIC BY USE OF 6" THICK REINFORCED CONCRETE PADS POURED AROUND VALVE BOXES (SEE DETAIL).
20. ALL SUBSURFACE CONSTRUCTION SHALL COMPLY WITH THE "TRENCH SAFETY ACT." THE CONTRACTOR SHALL INSURE THAT THE METHOD OF TRENCH PROTECTION AND CONSTRUCTION IS IN COMPLIANCE WITH THE OCCUPATIONAL SAFETY AND HEALTH ADMINISTRATION (OSHA) REGULATIONS.
21. CONNECTIONS INTO EXISTING COUNTY-OWNED SYSTEMS SHALL BE VIA WET TAP. WET TAPS SHALL BE PERFORMED BY THE PASCO COUNTY UTILITIES SERVICES BRANCH AT THE DEVELOPER'S EXPENSE. MATERIAL FOR WET TAPS LARGER THAN 2" SHALL BE PROVIDED AND INSTALLED BY THE PROJECT CONTRACTOR. EXCAVATION, BACKFILL AND SURFACE RESTORATION SHALL BE THE CONTRACTOR'S RESPONSIBILITY.
22. GATE VALVES INSTALLED FOR PHASING SHALL BE RESTRAINED PER CURRENT PASCO COUNTY STANDARDS.
23. OFF-ROAD UTILITY EASEMENTS SHALL BE "STABILIZED" FOR ACCESS BY MAINTENANCE VEHICLES.
24. RECLAIMED WATER MAINS, VALVES, AND SERVICES SHALL INCLUDE THE FOLLOWING TO AVOID CONFUSION WITH POTABLE SYSTEM:
    a. PURPLE PIGMENTED C-900, DR-18 PVC PIPING FOR 4"-12" RECLAIMED WATER MAINS, EXCEPT 2" WHICH SHALL BE SDR 21 PVC PIPING.
    b. SQUARE TOP VALVE BOXES FOR ISOLATION VALVES IN SYSTEM, WITH COVERS MARKED "EFFLUENT."
    c. PURPLE STRIPE ON CURB TO IDENTIFY RECLAIMED WATER SERVICES.
    d. ONE INCH SERVICES FOR RECLAIMED WATER SERVICES.
    e. PURPLE MAGNETIC LOCATING TAPE, STATING "REUSE MAIN BURIED BELOW" OVER ALL RECLAIMED WATER MAINS (18 INCHES BELOW GRADE).
    f. RECLAIMED WATER SERVICE ON OPPOSITE LOT LINE FROM POTABLE SERVICE.
    g. 16" - 24" RECLAIMED MAIN SHALL BE C-905 DR 25 PVC.
25. ALL ASPECTS OF RECLAIMED WATER SYSTEM MUST COMPLY WITH CHAPTER 17-610, F.A.C., LATEST EDITION.
26. MAINTAIN 5' MINIMUM HORIZONTAL SEPARATION BETWEEN RECLAIMED MAINS AND WATER MAINS OR FORCE MAINS.
27. STUB-OUT LINES ON THE WATER MAIN, FORCE MAIN, AND RECLAIMED MAIN SHALL HAVE RESTRAINED JOINTS FROM THE MAIN LINE TO THE STUB-OUT.
28. ALL PVC PRESSURE PIPE SHALL HAVE A MINIMUM 36" COVER.
29. SANITARY SEWERS, FORCE AND RECLAIMED MAINS AND STORM SEWERS SHOULD CROSS UNDER WATER MAINS. SANITARY SEWERS, FORCE AND RECLAIMED MAINS AND STORM SEWERS CROSSING WATER MAINS SHALL BE LAID TO PROVIDE A MINIMUM VERTICAL DISTANCE OF 18 INCHES BETWEEN THE INVERT OF THE UPPER PIPE AND THE CROWN OF THE LOWER PIPE WHENEVER POSSIBLE.
30. WHEN SANITARY SEWERS, FORCE AND RECLAIMED MAINS AND STORM SEWERS MUST CROSS A WATER MAIN WITH LESS THAN 18 INCHES VERTICAL DISTANCE, BOTH THE SEWER AND THE WATER MAIN SHALL BE CONSTRUCTED OF DUCTILE IRON PIPE (DIP) AT THE CROSSING. (DIP IS NOT REQUIRED FOR STORM SEWERS IF IT IS NOT AVAILABLE IN THE SIZE PROPOSED.) SUFFICIENT LENGTHS OF DIP MUST BE USED TO PROVIDE A MINIMUM SEPARATION OF 10 FEET BETWEEN ANY TWO JOINTS. ALL JOINTS ON THE WATER MAIN WITHIN 20 FEET OF THE CROSSING MUST BE LEAK FREE AND MECHANICALLY RESTRAINED. A MINIMUM VERTICAL CLEARANCE OF 6 INCHES MUST BE MAINTAINED AT THE CROSSING.
31. WHERE THERE IS NO ALTERNATIVE TO SEWER AND RECLAIMED PIPES CROSSING OVER A WATER MAIN, THE CRITERIA FOR MINIMUM SEPARATION OF 18 INCHES BETWEEN LINES AND 10 FEET BETWEEN JOINTS SHALL BE REQUIRED.
32. ALL CROSSINGS SHALL BE ARRANGED SO THAT THE SEWER AND RECLAIMED PIPES JOINTS AND THE WATER MAIN PIPE JOINTS ARE EQUIDISTANT FROM THE POINT OF CROSSING (PIPES CENTERED ON THE CROSSING).
33. WHERE A NEW PIPE CONFLICTS WITH AN EXISTING PIPE, THE NEW PIPE SHALL BE CONSTRUCTED OF DIP AND THE CROSSING SHALL BE ARRANGED TO MEET THE REQUIREMENTS ABOVE.
34. A MINIMUM 10-FOOT HORIZONTAL SEPARATION SHALL BE MAINTAINED IN PARALLEL INSTALLATIONS BETWEEN ANY TYPE OF SEWER (INCLUDING DRAINAGE INLETS) AND WATER MAIN WHENEVER POSSIBLE. A MINIMUM 5-FOOT HORIZONTAL SEPARATION SHALL BE MAINTAINED IN PARALLEL INSTALLATION BETWEEN RECLAIMED WATER MAINS AND WATER MAINS, AND BETWEEN RECLAIMED WATER MAINS AND SANITARY SEWERS WHENEVER POSSIBLE.
35. IN CASES WHERE IT IS NOT POSSIBLE TO MAINTAIN A 10-FOOT HORIZONTAL SEPARATION BETWEEN ANY TYPE OF PARALLEL SEWER AND WATER MAIN, OR A 5-FOOT SEPARATION BETWEEN RECLAIMED MAIN AND WATER MAIN, THE WATER MAIN MUST BE LAID IN A SEPARATE TRENCH OR ON AN UNDISTURBED EARTH SHELF LOCATED ON ONE SIDE OF THE SEWER, RECLAIMED MAIN, OR FORCE MAIN AT SUCH AN ELEVATION THAT THE BOTTOM OF THE WATER MAIN IS AT LEAST 18 INCHES ABOVE THE TOP OF THE SEWER.
36. WHERE IT IS NOT POSSIBLE TO MAINTAIN A VERTICAL DISTANCE OF 18 INCHES OR A HORIZONTAL DISTANCE OF 10 FEET IN PARALLEL INSTALLATIONS, THE WATER MAIN SHALL BE CONSTRUCTED OF DIP AND THE SEWER, RECLAIMED MAIN OR THE FORCE MAIN SHALL BE CONSTRUCTED OF DIP (IF AVAILABLE IN THE SIZE PROPOSED) WITH A MINIMUM VERTICAL DISTANCE OF 6 INCHES. THE WATER MAIN SHOULD BE ABOVE THE SEWER, RECLAIMED MAIN, OR FORCE MAIN. JOINTS ON THE WATER MAIN SHALL BE LOCATED AS FAR APART AS POSSIBLE FROM JOINTS ON THE SEWER, RECLAIMED MAIN, OR FORCE MAIN (STAGGERED JOINTS).
37. ***A PRIVATE WELL IS PROPOSED FOR IRRIGATION SERVICES.***
38. IN CONSIDERATION OF PASCO COUNTY'S AGREEMENT TO PROVIDE POTABLE WATER AND/OR RECLAIMED WATER TO THE SUBJECT PROPERTY, DEVELOPER/OWNER, AND ITS SUCCESSORS ASSIGNS, AGREE TO THE FOLLOWING:
    a. IN THE EVENT OF PRODUCTION FAILURE OR SHORTFALL BY TAMPA BAY WATER, AS SET FORTH IN SECTION 3.19 OF THE INTERLOCAL AGREEMENT CREATING TAMPA BAY WATER, DEVELOPER/OWNER SHALL TRANSFER TO PASCO COUNTY ANY AND ALL WATER USE PERMITS OR WATER USE RIGHTS THE DEVELOPER/OWNER MAY HAVE TO USE OR CONSUME SURFACE OR GROUND WATER WITHIN PASCO COUNTY.
    b. PRIOR TO DEVELOPER/OWNER SELLING WATER OR WATER USE PERMITS OR WATER USE RIGHTS, DEVELOPER/OWNER SHALL NOTIFY PASCO COUNTY, AND PASCO COUNTY SHALL HAVE A RIGHT OF FIRST REFUSAL TO PURCHASE SUCH WATER OR WATER USE PERMITS OR WATER USE RIGHTS.
39. CONTRACTOR'S RESPONSIBILITIES REGARDING WET TAPS TWO INCHES AND LARGER SHALL BE AS FOLLOWS:
    a. 2" ONLY- THIS EXCAVATED TRENCH MUST BE DRY OR THE TRENCH WILL REQUIRE ROCK AND A PUMP TO BE IN PLACE. THE MINIMUM DISTANCE FROM THE FACE OF THE VALVE TO THE WALL OF THE TRENCH IS TO BE SIX FEET.
    b. 3" AND LARGER- THE CONTRACTOR WILL SUPPLY A TAPPING SADDLE BEING EPOXY COATED, A TAPPING VALVE WITH MECHANICAL JOINT AND THE EQUIPMENT TO PROVIDE, AND CONDUCT A PRESSURE TEST. COUNTY PERSONNEL WILL WITNESS THE PRESSURE TEST WHICH MUST BE AT 150 PSI FOR DURATION OF THIRTY MINUTES.
    c. THE CONTRACTOR IS RESPONSIBLE FOR THE EXCAVATION BEFORE ANY COUNTY PERSONNEL WILL ENTER AN EXCAVATED AREA. IF THE TRENCH IS FOUR FEET IN DEPTH OR DEEPER, IT WILL REQUIRE A TRENCH BOX OR SLOPING, AND A LADDER ACCORDING TO OCCUPATIONAL SAFETY AND HEALTH ADMINISTRATION (OSHA) STANDARDS.
    d. THE TAPPING VALVE WILL REQUIRE A BLOCKING DEVICE MADE OF SUITABLE MATERIAL OR DEVICE. THIS BLOCKING DEVICE OR MATERIAL WILL BE PLACED UNDER THE VALVE AND REMAIN IN PLACE UNTIL THE TAP MACHINE IS REMOVED AND THE TAP IS COMPLETED.
    e. NOTE: IF THE CONTRACTOR HAS NOT FULFILLED HIS RESPONSIBILITIES, AS STATED ABOVE, PRIOR TO THE ARRIVAL OF PASCO COUNTY UTILITIES OPERATIONS AND MAINTENANCE TAPPING CREW, THERE WILL BE AN ADDITIONAL CHARGE OF $95.00.
    f. IF YOU HAVE ANY QUESTIONS REGARDING THIS INFORMATION, CONTACT NELSON D. HOLT, FIELD SUPERVISOR, UTILITIES SERVICES BRANCH, AT (727) 847-8145, OR E-MAIL NHOLT@PASCOCOUNTYFL.NET.
40. FIRE HYDRANTS SHALL BE FLOW TESTED AND COLOR CODED BASED UPON FLOW RESULTS.

STREET & DRAINAGE CONSTRUCTION NOTES:

1. PRIOR TO CONSTRUCTION, THE CONTRACTOR SHALL OBTAIN FROM THE ENGINEER OR OWNER A COPY OF ALL PERTINENT PERMITS RELATED TO THIS PROJECT. IT IS THE CONTRACTOR'S RESPONSIBILITY TO ASSURE THAT ALL CONSTRUCTION ACTIVITIES ARE IN COMPLIANCE WITH THE CONDITIONS OF ALL PERMITS AND APPROVALS. CONTRACTOR IS ALSO RESPONSIBLE FOR HAVING HIS DEWATERING PLAN APPROVED BY SWFWMD.
2. ALL CONSTRUCTION, MATERIALS AND WORKMANSHIP ARE TO BE IN ACCORDANCE WITH PASCO COUNTY LAND DEVELOPMENT CODE AND DOT SPECIFICATIONS, LATEST EDITIONS.
3. GRASS AND MULCH, OR SOLID SOD, ALL AREAS IN EXISTING RIGHTS-OF-WAY DISTURBED BY CONSTRUCTION. IN THE PROPOSED RIGHTS-OF-WAY A 16" WIDE AREA BEHIND THE BACK OF CURB SHALL BE SOLID SODDED. THE REMAINDER OF THE PROPOSED RIGHTS-OF-WAY TO BE SEEDED AND MULCHED IF THE SLOPE IS GREATER THAN 6:1.
4. IN ACCORDANCE WITH THE UNDERGROUND FACILITY DAMAGE PREVENTION AND SAFETY ACT (CHAPTER 556, F.S.) THE CONTRACTOR SHALL CALL THE SUNSHINE STATE ONE CALL OF FLORIDA (SSCOF) AT 1-800-432-4770 FORTY EIGHT (48) HOURS IN ADVANCE OF ANY EXCAVATION.
5. SUITABLE FILL OBTAINED THROUGH EXCAVATION OF STREETS AND DETENTION PONDS SHALL BE PLACED ON LOTS AND ADJACENT LAND IN ACCORDANCE WITH THE MASTER DRAINAGE AND GRADING PLAN AS DIRECTED BY THE ENGINEER.
6. SOD/SEED & MULCH SHALL BE PLACED IN ACCORDANCE WITH APPLICABLE CITY/COUNTY STANDARDS AS WELL AS IN ACCORDANCE WITH STANDARD AND SPECIFIC CONDITIONS IN THE SWFWMD PERMIT, IF APPLICABLE. AT A MINIMUM THIS SHALL INCLUDE SODDING OF ALL POND EMBANKMENTS OF A SLOPE 4:1 OR GREATER TO THE NW LINE, AS WELL AS SEEDING AND MULCHING OF THE BALANCE OF THE POND TRACTS (INCLUDING POND BERMS, EXCLUDING THE AREA BELOW NW), SODDING AT A MINIMUM OF 16" FROM THE BACK OF CURB, AND SEEDING AND MULCHING OF ANY PROJECT AREA WITH A SLOPE OF 4:1 OR STEEPER.
7. ROADWAY UNDERDRAIN HAS BEEN LOCATED ON THESE PLANS TO ENSURE ADEQUATE BASE PROTECTION. PRIOR TO CURB CONSTRUCTION, THE GEOTECHNICAL ENGINEER SHALL REVIEW THE PREDESIGN BORINGS AND, ALONG WITH THEIR FIELD INSPECTION, MAKE A RECOMMENDATION REGARDING ADDITIONAL UNDERDRAIN REQUIREMENTS.
8. SITE CLEARING SHALL BE PERFORMED PER THE APPROVED CONSTRUCTION PLANS AND IN ACCORDANCE WITH PASCO COUNTY LAND DEVELOPMENT CODE. INSTALLATION AND MAINTENANCE OF THE REQUIRED BARRICADING AND EROSION CONTROL SHALL BE THE RESPONSIBILITY OF THE SITE DEVELOPMENT CONTRACTOR UNLESS OTHERWISE DESIGNATED.
9. PRIOR TO BEGINNING CONSTRUCTION, CONTRACTOR SHALL EXPOSE ALL EXISTING UTILITY INVERTS TO WHICH A TIE-IN IS PROPOSED AND HAVE ENGINEER VERIFY THE ELEVATION AND ADEQUACY OF THESE INVERTS.
10. ALL SUBSURFACE CONSTRUCTION SHALL COMPLY WITH THE "TRENCH SAFETY ACT". THE CONTRACTOR SHALL ENSURE THAT THE METHOD OF TRENCH PROTECTION AND CONSTRUCTION IS IN COMPLIANCE WITH THE OCCUPATIONAL SAFETY AND HEALTH ADMINISTRATION (OSHA) REGULATIONS.
11. SILTATION ACCUMULATIONS GREATER THAN THE LESSER OF 12 INCHES OR ONE-HALF THE DEPTH OF THE SILTATION BARRIER SHALL BE IMMEDIATELY REMOVED AND PLACED IN UPLAND AREAS.
12. DURING LAND ALTERATION AND CONSTRUCTION ACTIVITIES, IT SHALL BE UNLAWFUL TO REMOVE VEGETATION BY GRUBBING OR TO PLACE SOIL DEPOSITS, DEBRIS, SOLVENTS, CONSTRUCTION MATERIAL, MACHINERY OR OTHER EQUIPMENT OF ANY KIND WITHIN THE DRIPLINE OF A TREE TO REMAIN ON THE SITE UNLESS OTHERWISE APPROVED BY THE COUNTY.
13. ALL EROSION CONTROL INSTALLATION AND INSTALLATION COORDINATION SHALL BE THE RESPONSIBILITY OF THE CONTRACTOR. BE ADVISED THAT THE CONSTRUCTION APPROVAL AND MAINTENANCE OF THE EROSION CONTROL SHALL BE THE SOLE RESPONSIBILITY OF THE SITE CONTRACTOR.
14. BUILDING DOWNSPOUTS TO BE DIRECTED TO THE ON-SITE STORM DRAINAGE SYSTEM.
15. FUTURE EXPANSION AREAS, IF DISTURBED, TO BE SEEDED AND MULCHED OR SODDED TO PREVENT EROSION TO EXISTING PAVEMENT SURFACES.
16. IT IS THE WATERGRASS CDD'S RESPONSIBILITY TO INSPECT AND MAINTAIN THE WATER RETENTION SYSTEM ON A REGULAR BASIS.
17. ALL DEMOLITION DEBRIS SHALL BE REMOVED FROM THE SITE AND LEGALLY DISPOSED OF.
18. ALL FIRST FLOOR ELEVATIONS (FF) SHALL BE A MINIMUM OF 1' ABOVE THE BASE FLOOD ELEVATION OR AS REQUIRED BY THE LCD SECTION 701.
19. PRIOR TO COMMENCEMENT OF CLEARING & GRUBBING, CONTRACTOR SHALL COORDINATE WITH HEIDT DESIGN, LLC TO SCHEDULE A SEDIMENT CONTROL AND SOIL EROSION PRE-CONSTRUCTION INSPECTION WITH THE PASCO COUNTY STORM WATER DIVISION.

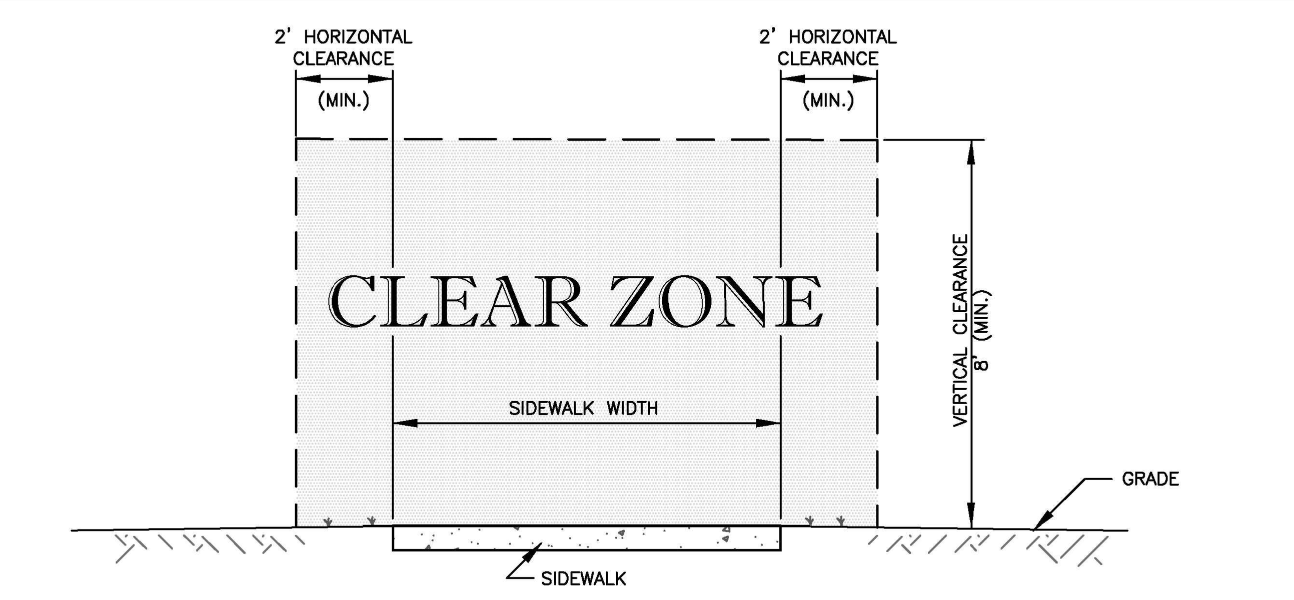

SIDEWALK CLEAR ZONE SECTION
NTS

NOTES:

1. THIS CLEAR ZONE APPLIES TO THE SIDEWALK ONLY. IT IS NOT INTENDED FOR ROADWAY PLACEMENT SET BACKS.
2. THE SIDEWALK CLEAR ZONE SHALL BE AN OPEN WINDOW FREE OF OBSTACLES. THIS INCLUDES SHRUBS, TREES, FENCES, ABOVE GROUND UTILITIES, I.E., POWER POLES, STREET LIGHTS, GUY ANCHORS, FIRE HYDRANTS, BLOW-OFFS, MAIL BOXES, STREET SIGNS, UTILITY MARKERS, ETC.
3. THE SIDEWALK HORIZONTAL CLEAR ZONE CLEARANCE IS MEASURED FROM THE SIDEWALK EDGE AND SHALL BE A MINIMUM OF 2 FEET.
4. THE SIDEWALK VERTICAL CLEAR ZONE CLEARANCE IS MEASURED FROM THE FINISHED SIDEWALK SURFACE AND SHALL BE A MINIMUM OF 8 FEET.

NOTE:
NO DEVIATIONS TO THIS DETAIL WILL BE PERMITTED UNLESS APPROVED BY THE COUNTY ENGINEER.
ANY PROPOSED ALTERATIONS SHALL BE CLEARLY IDENTIFIED AND HIGHLIGHTED ON DETAIL.

PASCO COUNTY ENGINEERING SERVICES / DESIGN STANDARDS	SIDEWALK CLEAR ZONE		Sheet No. 1 of 1
	APPROVED BY JCW	BCC APPROVAL / REVISED	Index No. 106

C:\Standards\Final\106_SW_ClearZone.dwg 09/09/08

CONDITIONS OF THE SITE DEVELOPMENT PERMIT

1. IF, DURING CONSTRUCTION ACTIVITIES, ANY EVIDENCE OF THE PRESENCE OF STATE OR FEDERALLY PROTECTED PLANT AND/OR ANIMAL SPECIES IS DISCOVERED THAT WOULD RESULT IN A TAKE, WORK SHALL COME TO AN IMMEDIATE STOP, AND PASCO COUNTY SHALL BE NOTIFIED WITHIN TWO WORKING DAYS. WORK MAY RESUME IF CONSTRUCTION ACTIVITIES ARE CONSISTENT WITH STATE AND/OR FEDERAL RULES, GUIDELINES OR ALL PERTINENT PERMITS HAVE BEEN OBTAINED.

2. BEFORE BEGINNING ANY CONSTRUCTION ACTIVITIES, INCLUDING SITE PREPARATION, THE APPLICANT SHALL CLEARLY FIELD- DEMARCATE, IN TWO DIFFERENT MANNERS, BOTH THE WETLAND JURISDICTIONAL LINE AND THE 25' OFFSET UPLAND BUFFER LINE, AS SHOWN ON THE FINAL, APPROVED SITE PLANS.

3. ALL CONSTRUCTION ACTIVITIES, INCLUDING BUT NOT LIMITED TO, CLEARING, DIGGING, DITCHING, GRADING, GRUBBING, TRENCHING OR INSTALLING EROSION OR SEDIMENT CONTROLS, SHALL OCCUR UPSLOPE FROM THE CLEARLY FIELD- DEMARCATED 25' OFFSET UPLAND BUFFER LINE; NO CONSTRUCTION ACTIVITIES SHALL OCCUR WITHIN THE 25' OFFSET UPLAND BUFFER.

ELEVATION DATA BASED ON:
NORTH AMERICAN VERTICAL DATUM 1988
CONVERSION:
NAVD 88 TO NGVD 29 = +0.85

HEIDT DESIGN
Civil Engineering • Planning & GIS
Transportation Engineering
Ecological Services • Landscape Architecture
Engineering Business Certificate of Authorization No. 28782
Landscape Architecture Certificate of Authorization No. LC26000405
5806-B Breckenridge Pkwy.
Tampa, Florida 33610
Office: 813-253-5311
Fax: 813-464-7629
www.HeidtDesign.com

RANGELAND BOULEVARD WEST EXTENSION PHASE 2

GENERAL NOTES

PREPARED FOR: WS-TSR, LLC

	DATE	DESCRIPTION
1	12/30/2015	INITIAL REVIEW SUBMITTAL

PROJECT NO:	TSR SR 1072
FILE:	GNOTES
DESIGN BY:	MOORE
DRAWN BY:	JONES

FLORIDA PROFESSIONAL ENGINEER
GARY D. MILLER
DATE:
REGISTRATION NO. 52717

C-102

R:\STARKEY RANCH\RANGELAND BLVD WEST EXT PHASE 2\ENGINEERING\GNOTES.DWG-C-102 2015/12/30 9:39 AM MARK JONES

© COPYRIGHT 2015, HEIDT DESIGN, LLC. ALL RIGHTS RESERVED. NO DOCUMENTATION (INCLUDING BUT NOT LIMITED TO DRAWINGS OR EXHIBITS) MAY BE COPIED, REPRODUCED, OR DISTRIBUTED UNLESS SPECIFIC WRITTEN PERMISSION HAS BEEN OBTAINED FROM HEIDT DESIGN, LLC. IN ADVANCE. CONSENT IS HEREBY GRANTED SPECIFICALLY TO GOVERNMENTAL AGENCIES TO REPRODUCE THIS DOCUMENTATION IN COMPLIANCE WITH F.S. CHAPTER 119.

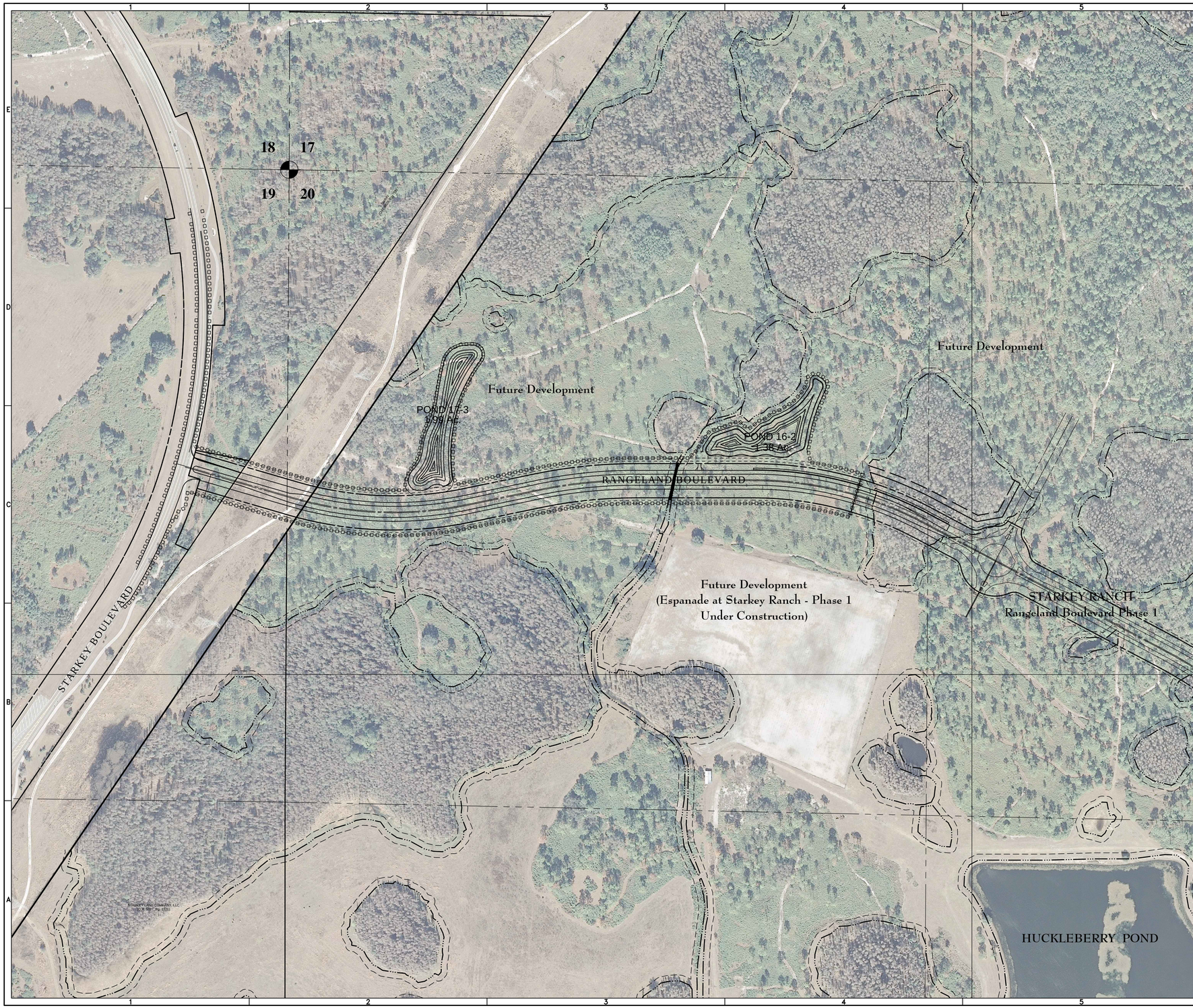

N

0 200 400

GRAPHIC SCALE: 1" = 200'

ELEVATIONS BASED ON:
NORTH AMERICAN VERTICAL DATUM 1988
CONVERSION:
NAVD 88 TO NGVD 29 = +0.85

NOTE:
THIS EXHIBIT WAS PREPARED FOR ILLUSTRATIVE PURPOSES ONLY. THE LATEST AVAILABLE DIGITAL AERIAL FILES HAVE BEEN USED; HOWEVER, THIS MAY NOT ACCURATELY DEPICT CURRENT SITE CONDITIONS. ADDITIONAL ENGINEERING, ENVIRONMENTAL REVIEWS, FIELD SURVEYING AND DATA COLLECTION ARE NECESSARY TO CORRECTLY PORTRAY ACTUAL SITE CONDITIONS. THIS EXHIBIT IS SUBJECT TO CHANGE WITHOUT NOTICE BASED ON THE ABOVE.

DATE OF PHOTO: 2011

HEIDT DESIGN
Civil Engineering • Planning & GIS
Transportation Engineering
Ecological Services • Landscape Architecture
Engineering Business Certificate of Authorization No. 28782
Landscape Architecture Certificate of Authorization No. LC26000415

5806-B Breckenridge Pkwy.
Tampa, Florida 33610
Office: 813-253-5311
Fax: 813-464-7629

www.HeidtDesign.com

RANGELAND BOULEVARD WEST EXTENSION PHASE 2

AERIAL SITE PLAN

PREPARED FOR: WS-TSR, LLC

DATE	DESCRIPTION

	DATE	DESCRIPTION
1	12/30/2015	INITIAL REVIEW SUBMITTAL

PROJECT NO:	TSR SR 1072
FILE:	ASP
DESIGN BY:	MOORE
DRAWN BY:	JONES

FLORIDA PROFESSIONAL ENGINEER

GARY D. MILLER
DATE:
REGISTRATION NO. 52717

C-103

R:\STARKEY RANCH\RANGELAND BLVD WEST EXT PHASE 2\ENGINEERING\ASP.DWG-C-103 2015\12\30 9:40 AM MARK JONES

© COPYRIGHT 2015, HEIDT DESIGN, LLC. ALL RIGHTS RESERVED. NO DOCUMENTATION (INCLUDING BUT NOT LIMITED TO DRAWINGS OR EXHIBITS) MAY BE COPIED, REPRODUCED, OR DISTRIBUTED UNLESS SPECIFIC WRITTEN PERMISSION HAS BEEN OBTAINED FROM HEIDT DESIGN, LLC IN ADVANCE. CONSENT IS HEREBY GRANTED SPECIFICALLY TO GOVERNMENTAL AGENCIES TO REPRODUCE THIS DOCUMENTATION IN COMPLIANCE WITH F.S. CHAPTER 119.

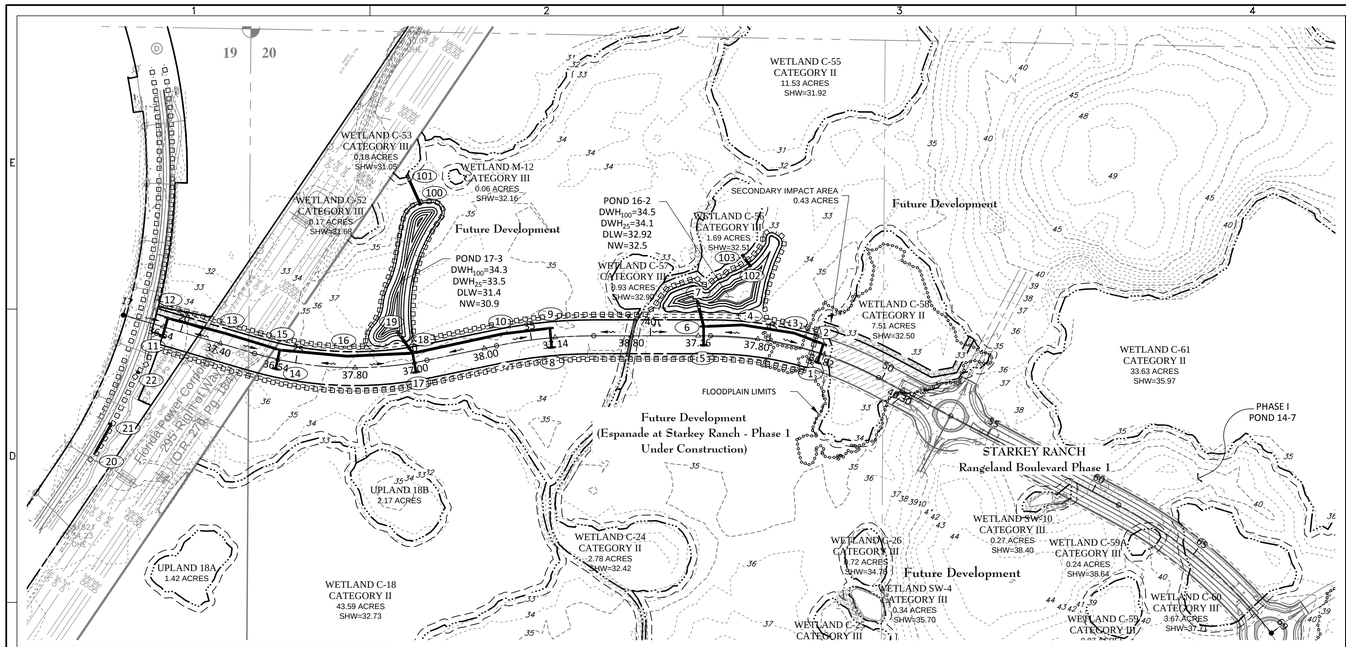

STARKEY RANCH RANGELAND BOULEVARD WEST EXTENSION PHASE 2

DESCRIPTION: A PARCEL OF LAND LYING IN SECTIONS 19 AND 20, TOWNSHIP 26 SOUTH, RANGE 17 EAST, PASCO COUNTY, FLORIDA, AND BEING MORE PARTICULARLY DESCRIBED AS FOLLOWS:

COMMENCE AT THE NORTHWEST CORNER OF SAID SECTION 20, RUN THENCE ALONG THE WEST BOUNDARY OF THE NORTHWEST 1/4 OF SAID SECTION 20, S.00°22'27"W., A DISTANCE OF 1284.20 FEET TO THE POINT OF BEGINNING; THENCE S.73°44'01"E., A DISTANCE OF 43.84 FEET; THENCE EASTERLY, 698.40 FEET ALONG THE ARC OF A TANGENT CURVE TO THE LEFT HAVING A RADIUS OF 1429.00 FEET AND A CENTRAL ANGLE OF 28°00'08" (CHORD BEARING S.87°44'05"E., 691.47 FEET); THENCE N.78°15'51"E., A DISTANCE OF 297.67 FEET; THENCE EASTERLY, 424.20 FEET ALONG THE ARC OF A TANGENT CURVE TO THE RIGHT HAVING A RADIUS OF 2071.00 FEET AND A CENTRAL ANGLE OF 11°44'09" (CHORD BEARING N.84°07'56"E., 423.46 FEET); THENCE N.90°00'00"E., A DISTANCE OF 489.02 FEET; THENCE EASTERLY, 451.16 FEET ALONG THE ARC OF A TANGENT CURVE TO THE RIGHT HAVING A RADIUS OF 1571.00 FEET AND A CENTRAL ANGLE OF 16°27'15" (CHORD BEARING S.81°46'23"E., 449.61 FEET) TO THE NORTHWEST CORNER OF TRACT C-1 OF STARKEY RANCH RANGELAND BOULEVARD WEST EXTENSION PHASE 1, ACCORDING TO THE PLAT THEREOF RECORDED IN PLAT BOOK 71, PAGE 136 THROUGH 143, INCLUSIVE, OF THE PUBLIC RECORDS OF PASCO COUNTY, FLORIDA; THENCE ALONG THE WEST BOUNDARY OF SAID TRACT C-1, S.16°27'15"W., A DISTANCE OF 142.00 FEET TO THE SOUTHWEST CORNER OF SAID TRACT C-1; THENCE WESTERLY, 410.38 FEET ALONG THE ARC OF A NON-TANGENT CURVE TO THE LEFT HAVING A RADIUS OF 1429.00 FEET AND A CENTRAL ANGLE OF 16°27'15" (CHORD BEARING N.81°46'23"W., 408.97 FEET); THENCE N.90°00'00"W., A DISTANCE OF 489.02 FEET; THENCE WESTERLY, 395.11 FEET ALONG THE ARC OF A TANGENT CURVE TO THE LEFT HAVING A RADIUS OF 1929.00 FEET AND A CENTRAL ANGLE OF 11°44'09" (CHORD BEARING S.84°07'56"W., 394.42 FEET); THENCE S.78°15'51"W., A DISTANCE OF 297.67 FEET; THENCE WESTERLY, 767.79 FEET ALONG THE ARC OF A TANGENT CURVE TO THE RIGHT HAVING A RADIUS OF 1571.00 FEET AND A CENTRAL ANGLE OF 28°00'08" (CHORD BEARING N.87°44'05"W., 760.18 FEET); THENCE N.73°44'01"W., A DISTANCE OF 391.51 FEET TO A POINT ON THE EASTERLY RIGHT OF WAY LINE OF STARKEY BOULEVARD PER OFFICIAL RECORDS BOOK 5486, PAGE 1737 OF THE PUBLIC RECORDS OF PASCO COUNTY, FLORIDA; THENCE ALONG SAID EASTERLY RIGHT OF WAY THE FOLLOWING THREE (3) COURSES: 1) NORTHERLY, 40.21 FEET ALONG THE ARC OF A NON-TANGENT CURVE TO THE LEFT HAVING A RADIUS OF 2310.00 FEET AND A CENTRAL ANGLE OF 00°59'50" (CHORD BEARING N.17°38'58"E., 40.21 FEET); 2) N.72°50'57"W., A DISTANCE OF 50.00 FEET; 3) NORTHERLY, 101.04 FEET ALONG THE ARC OF A NON-TANGENT CURVE TO THE LEFT HAVING A RADIUS OF 2260.02 FEET AND A CENTRAL ANGLE OF 02°33'42" (CHORD BEARING N.15°52'12"E., 101.03 FEET); THENCE S.73°44'01"E., A DISTANCE OF 397.40 FEET TO THE POINT OF BEGINNING.

CONTAINING 9.084 ACRES, MORE OR LESS.

STARKEY RANCH MPUD APPROVAL SUMMARY

ACTION REFERENCE			APPROVED
STARKEY RANCH MPUD PARCEL 2 NEIGHBORHOOD BLOCK PLAN	PDD No. 16-66	10/8/2015	APPROVED
UNIFIED SIGN PLAN	PDD 15-1685	10/6/2015	APPROVED
STARKEY RANCH TRANSIT ACCOMMODATION PLAN		7/17/2015	APPROVED
MASTER POTABLE WATER, RECLAIMED WATER, AND WASTEWATER PLAN	06-139.00	7/10/2015	APPROVED
MPUD NONSUBSTANTIAL MODIFICATION	PDD 15-562	4/8/2015	APPROVED
MPUD NONSUBSTANTIAL MODIFICATION	PDD 15-821	4/8/2015	APPROVED
LICENSE AND MAINTENANCE AGREEMENT		2/11/2015	APPROVED
MASTER ROADWAY PLAN & ALT. STD. REQUEST MOD.	PDD 15-255	12/18/2014	APPROVED
MPUD SUBSTANTIAL MODIFICATION	PDD 15-5259	12/4/2014	APPROVED
BICYCLE/PEDESTRIAN MASTER PLAN MODIFICATION	PDD 15-257	12/4/2014	APPROVED
MASTER PARK PLAN & ALT. STD. REQUEST MOD.	PDD 15-258	12/4/2014	APPROVED
WATER, SEWER, AND RECLAIMED UTILITIES SERVICE PLAN (REV.	PCU 06-139.00.A.6	8/6/2014	APPROVED
STARKEY RANCH VILLAGE 1 PHASES 1-5 PLANS	RSD 14-008	6/5/2014	APPROVED
STARKEY RANCH HEART PINE AVE/RANGELAND BLVD PLANS	LRG 14-010	5/23/2014	APPROVED
STARKEY RANCH WELCOME CENTER	SML 14-024	5/21/2014	APPROVED
MPUD NONSUBSTANTIAL MODIFICATION	PDD 14-885	5/14/2014	APPROVED
WATER, SEWER, AND RECLAIMED UTILITIES SERVICE PLAN	PCU 06-139.00.A.6	4/4/2014	APPROVED
WATER SUPPLY, RECLAIMED WATER AND WASTEWATER TREATMENT SERVICE AGREEMENT C79	UTD 14-453	2/25/2014	APPROVED
STARKEY RANCH VILLAGE 1 MASS GRADING PLANS	RSD 14-001	1/16/2014	APPROVED
DISTRICT PARK SITE, SCHOOL SITE, LIBRARY-THEATRE ACQUISITION, DEVELOPMENT, SHARED-USE & MANAGEMENT AGREEMENT	CAO 14-3501	12/17/2013	APPROVED
STARKEY RANCH MPUD SUBSTANTIAL MODIFICATION	RZ-7078	12/17/2013	APPROVED
BICYCLE & PEDESTRIAN MASTER PLAN	PDD 14-035	11/21/2013	APPROVED
MASTER ROADWAY PLAN & ALT. STD.	PDD 14-032	11/21/2013	APPROVED
MASTER PARK PLAN & ALT. STD.	PDD 14-257	11/21/2013	APPROVED
AMENDED AND RESTATED DEVELOPMENT AGREEMENT	PDD 13-141	11/7/2012	APPROVED
STARKEY RANCH MPUD REZONING PETITION	RZ-7027	9/11/2012	APPROVED
DRI RESCISSION RES. No. 12-309	PGM 12-206	9/11/2012	APPROVED
COMPREHENSIVE PLAN AMENDMENT ADOPTION ORD. 12-21	PGM 12-204	9/11/2012	APPROVED
REZONING 7027	PGM 12-205	9/11/2012	APPROVED
COMPREHENSIVE PLAN AMENDMENT ORD. 08-42	GM 08-466	9/23/2008	APPROVED
DRI/DEVELOPMENT ORDER 264 RES. No. 08-393	GM 08-468	9/23/2008	APPROVED
DRI NO 264 DEVELOPMENT AGREEMENT	GM 08-467	9/23/2008	APPROVED

N

0 300 600

GRAPHIC SCALE: 1" = 300'

ELEVATIONS BASED ON:
NORTH AMERICAN VERTICAL DATUM 1988
CONVERSION:
NAVD 88 TO NGVD 29 = +0.85

SECTIONS 20 & 21, TOWNSHIP 26 SOUTH,
RANGE 17 EAST, PASCO COUNTY, FLORIDA

GENERAL LEGEND

- WETLAND LINE
- WETLAND CONS. AREA SETBACK
- WETLAND IMPACT (PREVIOUS PHASE 1)
- WETLAND SECONDARY IMPACT (PREVIOUS PHASE 1)
- PROPOSED TREE BARRICADE
- STAKED EROSION CONTROL
- FLOODPLAIN LIMITS

DRAINAGE LEGEND

EXISTING	PROPOSED	
		STORM DRAINAGE STRUCTURE & PIPE
10	10	STRUCTURE NO.
+15.0	15.00	SPOT ELEVATION
	15.00	PROFILE GRADE ELEVATION REFERENCE
15	15.0	CONTOUR
		DIRECTION OF SURFACE FLOW

NOTES:

1) DEVELOPER/OWNER:
WS-TSR, LLC
(WHEELOCK STREET CAPITAL)
521 13th STREET
SAINT CLOUD, FL 34769
(312) 805-4830

2) ENGINEER: HEIDT DESIGN, INC.
5806-B BRECKENRIDGE PARKWAY
TAMPA, FLORIDA 33610
(813) 253-5311

3) SURVEYOR: GEOPOINT SURVEYING, INC.
1403 EAST 5TH AVENUE
TAMPA, FL 33605
(813) 248-8888

4) EXISTING ZONING: MPUD; EXISTING USE: VACANT/AGRICULTURAL
5) FUTURE LAND USE CLASSIFICATION: PD
6) THE ORIGINAL MPUD PLAN WAS APPROVED ON 9/11/12 (REZONING 7027).
7) REVISED MPUD APPROVED 12/17/13 (REZONING 7078).
8) WATER SERVICE TO BE PROVIDED BY PASCO COUNTY UTILITIES.
9) SEWAGE DISPOSAL SERVICE TO BE PROVIDED BY PASCO COUNTY UTILITIES.
10) ELECTRICAL POWER TO BE PROVIDED BY DUKE ENERGY.
11) TELEPHONE SERVICE TO BE PROVIDED BY VERIZON.
12) STREET LIGHTING TO BE PROVIDED BY CDD.
13) FIRE PROTECTION TO BE PROVIDED BY THE EXISTING PASCO COUNTY FIRE STATION #15. LOCATED APPROXIMATELY ONE (1.25) MILE FROM SITE. FIRE HYDRANTS TO BE PROVIDED ON SITE.
14) THE UPLANDS ARE ACTIVELY GRAZED BAHIA PASTURE. THE WETLANDS ARE CYPRESS SWAMPS AND GRASSY MARSHES.
15) PREDOMINANT SOIL TYPES ON-SITE CONSIST OF: SELLERS, SMYRNA, IMMOKALEE, & MYAKKA.
16) RECREATION AREAS, CONSERVATION AREAS, AND DETENTION PONDS WILL BE OWNED AND MAINTAINED BY THE CDD. LANDSCAPE EASEMENTS ALONG COLLECTOR AND ARTERIAL ROADWAYS WILL BE DEDICATED TO THE CDD FOR MAINTENANCE.
17) DETENTION PONDS TO BE WITHIN DRAINAGE EASEMENTS DEDICATED TO THE CDD FOR MAINTENANCE.
18) CONTOURS SHOWN ARE BASED ON NORTH AMERICAN VERTICAL DATUM OF 1988.
19) PROPOSED RIGHTS-OF-WAY FOR LOCAL STREETS SHALL BE A MINIMUM OF FIFTY (50) FEET.
20) ALL ROADWAY STANDARDS TO COMPLY WITH THE MANUAL OF UNIFORM MINIMUM STANDARDS, STATE OF FLORIDA.
21) ALL WATER AND WASTEWATER FACILITIES TO BE INSTALLED IN COMPLIANCE WITH PASCO COUNTY STANDARDS FOR DESIGN AND CONSTRUCTION OF WATER AND WASTEWATER FACILITIES.
22) ALL UTILITY LINES SHALL BE INSTALLED UNDERGROUND.
23) ENTIRE PROJECT LIES WITHIN FLOOD ZONE "A", "AE", & "X" ACCORDING TO FLOOD INSURANCE RATE MAPS FOR PASCO COUNTY, FLORIDA, FEDERAL EMERGENCY MANAGEMENT AGENCY (FEMA) - FLOOD INSURANCE RATE MAP (FIRM) COMMUNITY PANEL NO. 12023000400D DATED SEPTEMBER 30, 1992 AND PANEL NO. 12023000360D DATED SEPTEMBER 30, 1992 AND ISSUED BY THE FEDERAL EMERGENCY MANAGEMENT AGENCY. BASE FLOOD ELEVATION OF "AE" ZONES VARY BETWEEN, ELEVATION 42 TO ELEVATION 45 (NGVD).
24) A MINIMUM OF 16" OF SOD STRIP WILL BE PROVIDED ALONG ALL ROADWAYS PER PASCO COUNTY REQUIREMENTS.
25) SETBACKS FROM POST-DEVELOPED WETLANDS SHALL BE AS FOLLOWS: 25-FOOT MINIMUM AROUND ALL CATEGORY I WETLANDS; BUFFERS AROUND CATEGORY II AND CATEGORY III WETLANDS SHALL BE AS REQUIRED BY SWFWMD. ALLOWABLE USES AND RESTRICTIONS FOR BUFFERS SHALL IN ACCORDANCE WITH SECTION 702 OF THE PASCO COUNTY LAND DEVELOPMENT CODE.
26) SIDEWALKS WILL BE PROVIDED ON BOTH SIDES OF ALL ROADS INCLUDING NON-LOT AREAS. UNLESS OTHERWISE SHOWN, ALL SIDEWALKS SHALL BE A MINIMUM OF FIVE (5) FEET WIDE, 4½" THICK 3,000 P.S.I., FIBER REINFORCED CONCRETE, CONSTRUCTED ON NON-YIELDING SUBGRADE.
27) BUFFERING FOR ALL RETENTION/DETENTION AREAS ALONG ROAD RIGHT-OF-WAYS TO HAVE TREES SELECTED FROM TREE LIST AT THE RATE OF ONE TREE PER 50 L.F.
28) ALL LANDSCAPE AND SODDED AREAS ALONG COLLECTOR ROAD WILL BE IRRIGATED.
29) THIS PROJECT WILL COMPLY WITH THE PASCO COUNTY TREE PROTECTION AND RESTORATION ORDINANCE.
30) THIS PROJECT SHALL BE SUBJECT TO THE PASCO COUNTY NEW DEVELOPMENT FAIR SHARE CONTRIBUTION FOR ROAD IMPROVEMENTS ORDINANCE AND SCHOOL IMPACT FEE ORDINANCE.
31) ALL CONSTRUCTION WORK, INCLUDING ROAD, DRAINAGE AND UTILITIES, SHALL BE CONSTRUCTED IN ACCORDANCE WITH PASCO COUNTY DESIGN STANDARDS AND TESTED IN COMPLIANCE WITH THE PASCO COUNTY ENGINEERING SERVICE DEPARTMENT TESTING SPECIFICATIONS FOR CONSTRUCTION OF ROADS, STORM DRAINAGE AND UTILITIES.
32) IF DURING CONSTRUCTION ACTIVITIES ANY EVIDENCE OF HISTORIC RESOURCES, INCLUDING BUT NOT LIMITED TO ABORIGINAL OR HISTORIC POTTERY, PREHISTORIC STONE TOOLS, BONE OR SHELL TOOLS, HISTORIC TRASH PITS, OR HISTORIC BUILDING FOUNDATION, ARE DISCOVERED, WORK SHALL COME TO AN IMMEDIATE STOP AND THE FLORIDA DEPARTMENT OF HISTORIC RESOURCES (STATE HISTORIC PRESERVATION OFFICER) AND PASCO COUNTY SHALL BE NOTIFIED WITHIN TWO WORKING DAYS OF THE RESOURCES FOUND ON SITE.
33) IF DURING THE CONSTRUCTION ACTIVITIES ANY EVIDENCE OF THE PRESENCE OF STATE AND FEDERALLY PROTECTED PLANT AND/OR ANIMAL SPECIES ARE DISCOVERED, WORK SHALL COME TO AN IMMEDIATE STOP AND PASCO COUNTY SHALL BE NOTIFIED WITHIN TWO WORKING DAYS OF THE PLANT AND/OR ANIMAL SPECIES FOUND ON SITE.
34) ALL PROPOSED SIGNS MUST BE APPLIED FOR, APPROVED, AND PERMITTED ON AN INDIVIDUAL BASIS APART FROM ANY ULTIMATELY-APPROVED SITE PLAN. APPROVAL OF THIS SITE PLAN DOES NOT CONSTITUTE APPROVAL OF ANY SIGNAGE.
35) ALL 20'x20' CLEAR-SITE AREAS SHALL BE KEPT FREE OF ANY SIGNAGE PLANTINGS, TREES, ETC. IN EXCESS OF THREE-AND-A-HALF (3-1/2) FEET IN HEIGHT.
36) NO IRRIGATION SYSTEM OR LANDSCAPING SHALL BE INSTALLED IN ANY COUNTY OR STATE RIGHT-OF-WAY WITHOUT ISSUANCE OF APPROPRIATE RIGHT-OF-WAY USE PERMIT.
37) FUGITIVE DUST EMISSIONS SHALL BE CONTROLLED BY SPRINKLING AS NECESSARY.
38) ON-SITE BURNING SHALL NOT BE EMPLOYED WITHOUT APPROVAL FROM THE FIRE MARSHALL.
39) THE SOIL EROSION AND SEDIMENT CONTROL DEVICES SHALL BE INSTALLED PRIOR TO CONSTRUCTION AND MAINTAINED THROUGHOUT CONSTRUCTION UNTIL THE SITE IS PERMANENTLY STABILIZED.
41) ALL PROJECTS MUST COMPLY WITH PASCO COUNTY FIRE HYDRANT ORDINANCE NO. 46-51.
42) FIRE HYDRANTS SHALL BE INSTALLED AND IN SERVICE PRIOR TO THE ACCUMULATION OF COMBUSTIBLES.
43) PER THE NATIONAL FIRE PROTECTION ASSOCIATION, NFPA-1, 16.4.3.1.3: WHERE UNDERGROUND WATER MAINS AND HYDRANTS ARE TO BE PROVIDED, THEY SHALL BE INSTALLED, COMPLETED, AND IN SERVICE PRIOR TO BUILDING CONSTRUCTION WORK
44) PER NFPA-1, 18.3.4.1: CLEARANCES OF 7.5 FEET IN FRONT OF AND TO THE SIDES OF THE FIRE HYDRANT WITH A FOUR-FOOT CLEARANCE TO THE REAR MUST BE MAINTAINED AT ALL TIMES.
45) ALL DEMOLITION DEBRIS SHALL BE REMOVED FROM THE SITE AND LEGALLY DISPOSED OF.
46) ANY OFF SITE DISTURBANCE SHALL BE RESTORED TO THE PRE-CONSTRUCTION CONDITION OR BETTER.
47) AS APPLICABLE, THE OWNER/DEVELOPER SHALL PROVIDE COPIES OF THE REQUIRED PERMITS FROM THE RESPECTIVE GOVERNING AGENCIES, PRIOR TO ISSUANCE OF THE SITE DEVELOPMENT PERMIT (SDP).
48) UNDERDRAINS SHALL BE THE MAINTENANCE RESPONSIBILITY OF THE DEVELOPER'S SUCCESSOR (H.O.A. OR C.D.D.). A MAINTENANCE AND LICENCE AGREEMENT WILL BE ESTABLISHED TO ALLOW THE SUCCESSOR ENTITY TO MAINTAIN THE UNDERDRAINS.
49) NO DRIVEWAY CUTS SHALL BE ALLOWED ON COLLECTOR ROADS (TYPE LOW). DRIVEWAYS ARE ONLY ALLOWED ON LOCAL STREETS (TYPES SLOW & YIELD).
50) THESE PLANS WERE PREPARED WITH THE BENEFIT OF AND IN CONFORMANCE TO THE GEOTECHNICAL RECOMMENDATIONS IN THE REPORTS BY MORTENSEN ENGINEERING, INC. ENTITLED AS FOLLOWS: "STORMWATER POND AREA SOILS STUDY" (DATED 9/16/13); "ROADWAY SOILS STUDY RESIDENTIAL/PARCEL ROADWAYS" (DATED 10/29/13); "GEOTECHNICAL ENGINEERING SERVICES/ROADWAY SOILS STUDY - COLLECTOR ROADWAYS/BOULEVARDS" (DATED 6/19/13); AND "STARKEY RANCH - VILLAGE 1 MASS GRADING AREAS: GEOTECHNICAL DATA AND REQUIREMENTS (DATED 8/19/2013)."

PASCO COUNTY DEVELOPMENT REVIEW - SITE PLAN NOTES

1) ALL UTILITY CONSTRUCTION SHALL COMPLY WITH THE PASCO COUNTY STANDARDS FOR DESIGN AND CONSTRUCTION OF WATER AND WASTEWATER FACILITIES SPECIFICATIONS, LATEST EDITION.
2) INSTALLATION OF FUEL STORAGE TANKS REQUIRES REVIEW AND APPROVAL BY THE FIRE MARSHAL AND THE ISSUANCE OF A SEPARATE BUILDING PERMIT. APPROVAL OF THE SITE PLAN DOES NOT CONSTITUTE APPROVAL OF THE LOCATION OF THE FUEL TANKS.
3) ALL PROPOSED SIGNS MUST BE APPLIED FOR, APPROVED, AND PERMITTED ON AN INDIVIDUAL BASIS APART FROM ANY ULTIMATELY APPROVED SITE PLAN. APPROVAL OF THIS SITE PLAN DOES NOT CONSTITUTE APPROVAL OF ANY SIGNAGE.
4) HANDICAP PARKING SPACES WILL BE PROPERLY SIGNED AND STRIPED IN ACCORDANCE WITH FLORIDA STATUTE 316, THE MANUAL ON UNIFORM TRAFFIC CONTROL DEVICES, OR OTHER APPLICABLE STANDARDS.
5) THE ARCHITECT/ENGINEER CERTIFIES THAT THE SITE HAS BEEN DESIGNED IN ACCORDANCE WITH THE AMERICANS WITH DISABILITIES ACT.
6) ALL ON-SITE PARKING SPACES WILL BE STRIPED AND SIGNED IN ACCORDANCE WITH THE MANUAL ON UNIFORM TRAFFIC CONTROL DEVICES, LATEST EDITION. PARKING SPACES, DIRECTIONAL ARROWS, AND STOP BARS SHALL BE STRIPED IN WHITE. IT SHALL BE THE OWNER/DEVELOPER'S RESPONSIBILITY TO PROPERLY SIGN AND STRIPE IN ACCORDANCE WITH APPLICABLE STANDARDS.
7) THE OWNER/DEVELOPER ACKNOWLEDGES THAT THIS APPROVAL DOES NOT INCLUDE ANY WORK IN THE COUNTY RIGHT-OF-WAY. ALL RIGHT-OF-WAY WORK SHALL BE A FUNCTION OF AN APPROVED PASCO RIGHT-OF-WAY USE PERMIT.
8) ALL CLEAR-SITE AREAS SHALL BE KEPT FREE OF ANY SIGNAGE PLANTINGS, TREES, ETC. IN EXCESS OF THREE-AND-A-HALF (3-1/2) FEET IN HEIGHT.
9) NO IRRIGATION SYSTEM OR LANDSCAPING SHALL BE INSTALLED IN ANY COUNTY OR STATE RIGHT-OF-WAY WITHOUT ISSUANCE OF APPROPRIATE RIGHT-OF-WAY USE PERMIT.
10) THE OWNER/DEVELOPER ACKNOWLEDGES THAT THE SITE AND ITS SUBSEQUENT BUILDING PERMITS SHALL COMPLY WITH ALL REZONING/MPUD/PUD CONDITIONS.
11) ALL STRUCTURES, INCLUDING BUFFER WALLS, RETAINING WALLS, SIGNAGE, ETC. REQUIRE BUILDING PERMITS.

RANGELAND BOULEVARD WEST EXTENSION PHASE 2
WETLAND IMPACT SUMMARY TABLE

WETLAND IDENTIFICATION	ACRES ON SITE	WETLAND IMPACT ACRES	WETLAND CATEGORY	UNIMPACTED WETLAND ACRES
WETLAND C-58*	1.88	2.97	II	1.09
TOTAL	1.88	2.97		1.09

* PREVIOUSLY IMPACTED WITH RANGELAND BLVD WEST EXTENSION PHASE 1

WETLAND CATEGORY TABLE

CATEGORY	SIZE (AC)
I	0
II	2.97
III	0
TOTAL	2.97

HEIDT DESIGN
Civil Engineering • Planning & GIS
Transportation Engineering
Ecological Services • Landscape Architecture
Engineering Business Certificate of Authorization No. 28782
Landscape Architecture Certificate of Authorization No. LC26000415
5806-B Breckenridge Pkwy.
Tampa, Florida 33610
Office: 813-253-5311
Fax: 813-464-7629
www.HeidtDesign.com

RANGELAND BOULEVARD
WEST EXTENSION PHASE 2

PRELIMINARY PLAN

PREPARED FOR: WS-TSR, LLC

DATE	DESCRIPTION

DATE	DESCRIPTION
12/30/2015	INITIAL REVIEW SUBMITTAL
1	

PROJECT NO: TSR SR 1072
FILE: PP-01
DESIGN BY: MOORE
DRAWN BY: JONES

FLORIDA PROFESSIONAL ENGINEER

GARY D. MILLER
DATE:
REGISTRATION NO. 52717

C-104

RUSTARKEY RANCH\RANGELAND BLVD WEST EXT PHASE 2\ENGINEERING\PP-01.DWG-C-104 2015\12\30\ 9:40 AM MARK JONES

© COPYRIGHT 2015, HEIDT DESIGN, LLC. ALL RIGHTS RESERVED. NO DOCUMENTATION INCLUDING BUT NOT LIMITED TO DRAWINGS OR FILMS TO MAY BE COPIED, REPRODUCED, OR DISTRIBUTED UNLESS SPECIFIC WRITTEN PERMISSION HAS BEEN OBTAINED FROM HEIDT DESIGN, LLC. IN ADVANCE. CONSENT IS HEREBY GRANTED SPECIFICALLY TO GOVERNMENTAL AGENCIES TO REPRODUCE THIS DOCUMENTATION IN COMPLIANCE WITH F.S. CHAPTER 119.

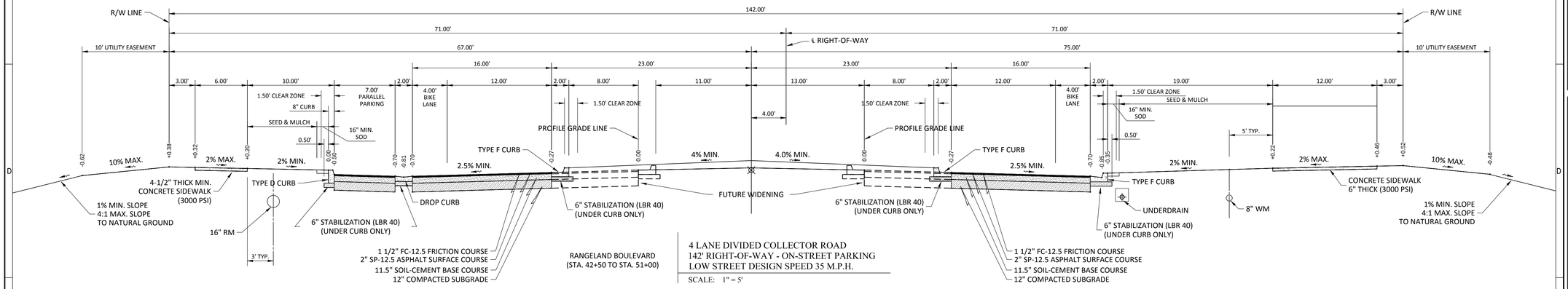

RANGELAND BOULEVARD
(STA. 42+50 TO STA. 51+00)

4 LANE DIVIDED COLLECTOR ROAD
142' RIGHT-OF-WAY - ON-STREET PARKING
LOW STREET DESIGN SPEED 35 M.P.H.

SCALE: 1" = 5'

NOTE: DESIGN SPEED WILL BE REDUCED TO 20 MPH AT ROUNDABOUTS

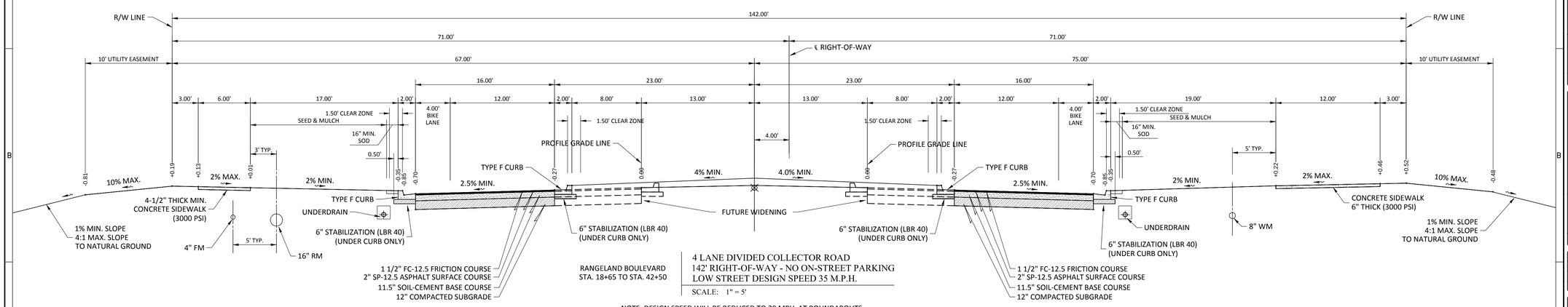

RANGELAND BOULEVARD
STA. 18+65 TO STA. 42+50

4 LANE DIVIDED COLLECTOR ROAD
142' RIGHT-OF-WAY - NO ON-STREET PARKING
LOW STREET DESIGN SPEED 35 M.P.H.

SCALE: 1" = 5'

NOTE: DESIGN SPEED WILL BE REDUCED TO 20 MPH AT ROUNDABOUTS

CLEAR ZONE NOTE:

ROADSIDE CLEAR ZONE SHALL BE FREE OF ANY OBSTRUCTION

HEIDT DESIGN
Civil Engineering • Planning & GIS
Transportation Engineering
Ecological Services • Landscape Architecture
Engineering Business Certificate of Authorization No. 28782
Landscape Architecture Certificate of Authorization No. LC26000405
5806-B Breckenridge Pkwy.
Tampa, Florida 33610
Office: 813-253-5311
Fax: 813-464-7629
www.HeidtDesign.com

RANGELAND BOULEVARD WEST EXTENSION PHASE 2

TYPICAL ROADWAY SECTIONS

PREPARED FOR: WS-TSR, LLC

1	12/30/2015	INITIAL REVIEW SUBMITTAL
	DATE:	DESCRIPTION:

DATE:	DESCRIPTION:

PROJECT NO: TSR SR 1072
FILE: RS
DESIGN BY: MOORE
DRAWN BY: JONES

FLORIDA PROFESSIONAL ENGINEER

GARY D. MILLER
DATE:
REGISTRATION NO. 52717

C-201

© COPYRIGHT 2015, HEIDT DESIGN, LLC. ALL RIGHTS RESERVED. NO DOCUMENTATION INCLUDING BUT NOT LIMITED TO DRAWINGS OR EXHIBITS MAY BE REPRODUCED OR DISTRIBUTED IN WHOLE OR IN PART WITHOUT THE PRIOR WRITTEN CONSENT OF HEIDT DESIGN, LLC. THIS DOCUMENT IS PROVIDED "AS IS" IS HEREBY GRANTED SPECIFICALLY TO GOVERNMENTAL AGENCIES TO REPRODUCE THIS DOCUMENTATION IN COMPLIANCE WITH F.S. CHAPTER 119.

R:\STARKEY RANCH\RANGELAND BLVD WEST EXT PHASE 2\ENGINEERING\DRS.DWG-C-201 2015/12/30 9:40 AM MARK JONES

SOIL – CEMENT BASE SPECIFICATIONS

DESCRIPTION
CONSTRUCT A BASE COURSE COMPOSED OF A COMBINATION OF SOIL, PORTLAND CEMENT, AND WATER.

MATERIALS
MEET THE FOLLOWING REQUIREMENTS:

CEMENT: PORTLAND CEMENT, TYPE I, II, III, OR TYPE I–P OR TYPE I–S.................SECTION 921

WATER: USE WATER THAT IS FREE FROM SUBSTANCES DELETERIOUS TO HARDENING OF THE SOIL–CEMENT MIXTURE.
CURING MATERIAL: 916–4

USE EMULSIFIED ASPHALT GRADE SS, RS, OR MS AS APPROVED BY THE ENGINEER. DILUTE THESE AS RECOMMENDED BY MANUFACTURER.

SOIL: FOR BASE COURSE CONSTRUCTION, USE EITHER THE MATERIAL EXISTING IN THE LOCATION TO BE OCCUPIED BY BASE, A SUITABLY FRIABLE MATERIAL FURNISHED BY THE CONTRACTOR, OR A COMBINATION OF THESE. IF THE MATERIAL EXISTING IN THE LOCATION TO BE OCUPIED BY THE BASE DOES NOT MEET THE REQUIREMENTS SPECIFIED BELOW, REMOVE AND REPLACED WITH SUITABLE SOIL.

OBTAIN APPROVAL OF THE MATERIAL PITS PRIOR TO USE. EXCAVATE MATERIAL PITS TO ACHIEVE A UNIFORMLY MIXED MATERIAL WITH REASONABLY CONSISTENT CHARACTERISTICS. BLEND STRATA OR DIFFERING MATERIALS IN ACCORDANCE WITH A PROCEDURE APPROVED BY THE ENGINEER. THE COUNTY WILL CONSIDER PROPOSED RECYCLED MATERIALS ON A CASE BY CASE BASIS.

SPECIFIC REQUIREMENTS FOR SOIL:
ORGANIC MATERIAL (AS PER FM 1–T267)..................................MAXIMUM 5%
TOTAL CLAY AND SILT CONTENT (MINUS NO. 200 [75 μΩ SIEVE](AS PER FM 1–T088, NO HYDROMETER TEST) ....MAXIMUM 25%
PLASTIC INDEX (AS PER FM 1–T090)..MAXIMUM 10%
LIQUID LIMIT (AS PER FM 1–T089)..MAXIMUM 25%
GRADATION:
PASSING 2 INCH [50 MM] SIEVE..MINIMUM 100%
PASSING NO. 4 [4.75 MM] SIEVE......................................MINIMUM 55%
PASSING NO. 10 [2.00 MM] SIEVE....................................MINIMUM 37%
(AS PER FM 1–T088)

AS AN EXCEPTION TO THE ABOVE REQUIRMENTS, THE CONTRACTOR MAY USE ANY MATERIAL MEETING THE REQUIREMENTS FOR LIMEROCK.

NOTE:

THE ABOVE SOIIL CEMENT BASE SPECIFICATIONS WERE TAKEN FROM FDOT STANDARD SPECIFICATIONS FOR ROAD AND BRIDGE CONSTRUCTION 2002 MANUAL – SECTION 270. AS SUCH, THE REFERENCED MATERIALS FOR SOIL CEMENT BASE SHALL CONFORM TO THE REQUIREMENTS SPECIFIED IN DIVISION III (MATERIALS) OF THIS FDOT MANUAL AS WELL.

SOIL CEMENT SHALL BE PLANT MIXED. DESIGN MIX SHALL BE 300 PSI AND CONSTRUCTED BASE SHALL NOT EXCEED 350 PSI.

NOTE:
NO DEVIATIONS TO THIS DETAIL WILL BE PERMITTED UNLESS APPROVED BY THE COUNTY ENGINEER.
ANY PROPOSED ALTERATIONS SHALL BE CLEARLY IDENTIFIED AND HIGHLIGHTED ON DETAIL.

PASCO COUNTY ENGINEERING SERVICES DESIGN STANDARDS	SOIL - CEMENT BASE SPECIFICATIONS		Sheet No. 1 of 1
	APPROVED BY JCW	BCC APPROVAL REVISED	Index No. 105

C:\Standards\Final\105_SoilCement-Specs.dwg 01/12/09

PASCO COUNTY CRUSHED CONCRETE BASE SPECIFICATIONS

THE WORK SPECIFIED UNDER THIS SECTION CONSISTS OF THE CONSTRUCTION OF ROADWAY BASE UTILIZING CRUSHED CONCRETE (RECLAIMED CONCRETE AGGREGATE BASE MATERIAL) ON A PREPARED STABILIZED SUBGRADE OF LBR 40 WITH A DENSITY OF 98% OF THE MODIFIED PROCTOR MAXIMUM DENSITY AS DETERMINED BY FM 1-T 180, METHOD D, IN CONFORMITY WITH THE LINES, GRADES NOTES AND TYPICAL CROSS SECTIONS SHOWN IN THE PLANS, AND AS DIRECTED BY THE COUNTY ENGINEER.

THE CONSTRUCTION OF CRUSHED CONCRETE BASE SHALL CONFORM TO THE REQUIREMENTS OF THIS SECTION, OR, IN LIEU THEREOF, SUCH REQUIREMENTS AS MAY BE ESTABLISHED BY THE COUNTY ENGINEER DURING CONSTRUCTION. THE COUNTY ENGINEER SHALL HAVE FULL AUTHORITY TO MODIFY THE PROVISIONS OF THIS SECTION AS DEEMED NECESSARY, IN HIS OPINION, TO MEET FIELD CONDITIONS AND REQUIREMENTS.

MATERIALS

CRUSHED CONCRETE MUST BE PRODUCED FROM A SOURCE APPROVED BY FLORIDA DEPARTMENT OF TRANSPORTATION OR THE COUNTY ENGINEER. THE SUPPLIER SHALL HAVE DEPARTMENT OF ENVIRONMENTAL PROTECTION (DEP) PERMIT REQUIREMENTS SECTION 62-701.730 OR BE QUALIFIED AS A CLEAN DEBRIS SOURCE UNDER DEP RULES. THE RECLAIMED CONCRETE AGGREGATE BASE SHALL CONSIST OF CRUSHED CONCRETE MATERIAL DERIVED FROM THE CRUSHING OF HARD PORTLAND CEMENT CONCRETE.

COMPOSITION

BASE MATERIAL SHALL CONFORM TO THE FOLLOWING **GRADATION REQUIREMENTS**:

SIEVE SIZE	PERCENT BY WEIGHT PASSING
2 INCH	100
3/4 INCH	65 to 95
3/8 INCH	40 to 85
No. 4	25 to 65
No. 10	20 to 50
No. 50	5 to 25
No. 200	0 to 10

BASE MATERIAL SHALL CONFORM TO THE FOLLOWING **PLASTICITY REQUIREMENTS**:

CRUSHED CONCRETE BASE SHALL NOT CONTAIN PLASTIC SOILS SUCH THAT THE No. 40 SIEVE MATERIAL SHALL BE NON-PLASTIC.

LIQUID LIMIT (AS DETERMINED BY AASHTO T80) (LESS THAN 25) PER MATERIAL TYPE

THE FINISHED IN-PLACE CRUSHED CONCRETE BASE **LIMEROCK BEARING RATIO** SHALL HAVE A MINIMUM (LBR) OF 150.

CRUSHED CONCRETE BASE SHALL BE FREE OF ALL MATERIALS THAT FALL UNDER THE CATEGORY OF SOLID WASTE OR HAZARD MATERIALS AS DEFINED BY THE STATE OR LOCAL JURISDICTION AND SHALL MEET ALL DEP PERMIT REQUIREMENTS WHICH PERTAIN TO CONSTRUCTION, DEMOLITION AND RECYCLING OF THESE MATERIALS. CRUSHED CONCRETE BASE SHALL BE ASBESTOS FREE. THE FOLLOWING LIMITS SHALL NOT BE EXCEEDED:

BITUMINOUS CONCRETE..1% BY WEIGHT
BRICKS..1% BY WEIGHT
WOOD AND OTHER ORGANIC SUBSTANCES......................0.5% BY WEIGHT
HEAVY METALS (EXCEPT LEAD)...................................0.1% BY WEIGHT
LEAD..5 PARTS PER MILLION
REINFORCED STEEL AND WELDED WIRE FABRIC................0.1% BY WEIGHT
PLASTER AND GYPSUM BOARD....................................0.1% BY WEIGHT

THE MATERIAL FOR CRUSHED CONCRETE BASE SHALL CONSIST ONLY OF CRUSHED CONCRETE PAVEMENT AND SUCH ADDITIVE MATERIAL AS MAY BE APPROVED BY THE COUNTY ENGINEER FOR THE PURPOSE OF FACILITATING CONSTRUCTION AND ACHIEVING THE DESIRED CHARACTERISTICS OF THE FINISHED IN-PLACED PRODUCT. APPROVAL FROM THE COUNTY ENGINEER IS REQUIRED BEFORE PLACING MATERIAL FROM MORE THAN ONE SOURCE. ONCE APPROVED, A CHANGE IN THE SOURCE OF BASE MATERIAL SHALL REQUIRE ADDITIONAL ACCEPTANCE TESTING. THE MATERIAL SHALL NOT CONTAIN LUMPS, BALLS OR POCKETS OF SAND OR CLAY MATERIAL IN SIZE OR QUANTITY SUFFICIENT TO BE DETRIMENTAL TO THE PROPER BONDING, FINISHING, STRENGTH OF THE CONCRETE BASE. EXISTING BASE IS TO BE REMOVED TO CONSTRUCT THE NEW BASE.

INSPECTION

SUBGRADE AND BASE INSPECTIONS SHALL BE CONDUCTED BY THE ENGINEER OF RECORD AND THE COUNTY INSPECTOR PRIOR TO SURFACE COURSE CONSTRUCTION.

NOTE:
NO DEVIATIONS TO THIS DETAIL WILL BE PERMITTED UNLESS APPROVED BY THE COUNTY ENGINEER.
ANY PROPOSED ALTERATIONS SHALL BE CLEARLY IDENTIFIED AND HIGHLIGHTED ON DETAIL.

PASCO COUNTY ENGINEERING SERVICES DESIGN STANDARDS	CRUSHED - CONCRETE BASE SPECIFICATIONS		Sheet No. 1 of 2
	APPROVED BY JCW	BCC APPROVAL REVISED	Index No. 104

C:\Standards\Final\104_Crush-Conc_BaseSpec.dwg 05/15/09

EQUIPMENT, PLACEMENT AND SPREADING OF MATERIAL

USE MECHANICAL ROCK SPREADERS, EQUIPPED WITH A DEVICE THAT STRIKES OFF THE ROCK UNIFORMLY TO LAYING THICKNESS AND CAPABLE OF PRODUCING EVEN DISTRIBUTION. FOR ROADWAY WIDTHS OF 20 FEET OR LESS, CROSSOVERS, INTERSECTIONS, RAMP AREAS OR WHERE THE USE OF A MECHANICAL SPREADER IS NOT PRACTICABLE; THE CONTRACTOR MAY SPREAD THE CRUSHED CONCRETE BASE USING BULLDOZERS OR BLADE GRADERS.

TRANSPORT CRUSHED CONCRETE TO THE POINT OF USE, OVER THE BASE PREVIOUSLY PLACED, AND DUMP IT ON THE END OF THE PRECEDING SPREAD. HAULING ON SUBGRADE TO DUMP CRUSHED CONCRETE BASE WILL BE PERMITTED ONLY WHEN, IN THE ENGINEER'S OPINION, THESE OPERATIONS WILL NOT BE DETRIMENTAL TO THE BASE AND SUBGRADE.

CRUSHED CONCRETE SHALL BE SPREAD UNIFORMLY WITHOUT SEGREGATION OF FINE OR COURSE MATERIALS. SEGREGATED AREAS SHALL BE REPLACED WITH PROPERLY GRADED CRUSHED CONCRETE AFTER REMOVAL.

THE MINIMUM THICKNESS OF THE CRUSHED CONCRETE BASE SHALL BE INDICATED ON THE PLANS. WHEN THE SPECIFIED COMPACTED THICKNESS OF THE CRUSHED CONCRETE BASE IS **GREATER THAN SIX INCHES, CONSTRUCT THE BASE IN MULTIPLE COURSES OF EQUAL THICKNESS. INDIVIDUAL COURSES SHALL NOT BE LESS THAN THREE INCHES.** PLACE CRUSHED CONCRETE MATERIAL TO ENSURE THE TOTAL THICKNESS SINGLE SOURCE INTEGRITY AT ANY STATION LOCATION OF THE BASE.

COMPACTING, FINISHING AND TESTING REQUIREMENTS

AFTER SPREADING IS COMPLETED THE CRUSHED CONCRETE SHALL BE UNIFORMLY COMPACTED, WITH WATER BEING ADDED AS REQUIRED TO A **DENSITY OF NOT LESS THAN ONE HUNDRED PERCENT (100%) OF THE MAXIMUM DENSITY AS DETERMINED BY AASHTO T-180.** DURING FINAL COMPACTION OPERATIONS, IF THE BLADING OF ANY AREAS IS NECESSARY TO OBTAIN THE TRUE GRADE AND CROSS SECTION, FREE OF SCABS AND LAMINATIONS, THE COMPACTING OPERATIONS FOR SUCH AREAS SHALL BE COMPLETED PRIOR TO THE PERFORMANCE OF DENSITY TESTS ON THE FINISHED BASE.

MULTIPLE COURSE BASE: CLEAN THE FIRST COURSE OF FOREIGN MATERIAL, THEN BLADE AND BRING IT TO A SURFACE CROSS-SECTION APPROXIMATELY PARALLEL TO THE FINISHED BASE. BEFORE SPREADING ANY MATERIAL FOR THE UPPER COURSES, **OBTAIN DENSITY TESTS FOR THE LOWER COURSES** TO DETERMINE THAT THE REQUIRED COMPACTION [NOT LESS THAN ONE HUNDRED PERCENT (100%) OF THE MAXIMUM DENSITY AS DETERMINED BY AASHTO T-180] HAS BEEN OBTAINED. AFTER SPREADING THE CRUSHED CONCRETE FOR THE TOP COURSE, FINISH AND SHAPE IT'S SURFACE TO PRODUCE THE REQUIRED GRADE AND CROSS-SECTION, FREE OF SCABS AND LAMINATIONS, AFTER COMPACTION.

THE MINIMUM DENSITY THAT WILL BE ACCEPTED AT ANY LOCATION OUTSIDE THE TRAVELED ROADWAY (SUCH AS INTERSECTIONS, CROSSOVERS, TURNOUTS, ETC.) SHALL BE 98% OF THE MAXIMUM DENSITY AS DETERMINED BY AASHTO T-180.

TESTING OF BASE COURSE

THE MINIMUM **FREQUENCY** OF SAMPLING AND TESTING OF CRUSHED CONCRETE MATERIAL, LAB DENSITY, FIELD DENSITY AND THICKNESS SHALL ADHERE TO THE FREQUENCY OF TESTING FOR LIMEROCK BASE IN THE MOST CURRENT EDITION OF "**PASCO COUNTY ENGINEERING SERVICES DEPARTMENT TESTING SPECIFICATIONS FOR CONSTRUCTION OF ROADS, STORM DRAINAGE AND UTILITIES**". ONE PLANT MIX DESIGN, ONE PLANT GRADATION TEST FOR SIEVE ANALYSIS OF FINE AND COARSE AGGREGATES (AASHTO T-27) (FM1-T027) INCLUDING A PLASTICITY INDEX (FM-T090) (AASHTO T-90) FROM THE APPROVED SOURCE SHALL BE SUBMITTED AT ONE PER DAY OR CHANGE OF MATERIAL. ONE ROADWAY FIELD TEST FOR SIEVE ANALYSIS OF FINE AND COARSE AGGREGATES (ASTM C-136) SHALL BE SUBMITTED PER 500 FEET OF ROAD PER DAY PER MIX DESIGN; MINIMUM ONE PER ROAD.

THE CONTRACTOR SHALL BE RESPONSIBLE FOR ALL TESTING PERFORMED IN CONNECTION WITH CONSTRUCTION OF THE BASE.

CORRECTION OF DEFECTS

ALL SEGREGATED AREAS OF FINE OR COURSE CRUSHED CONCRETE SHALL BE REMOVED AND REPLACED WITH PROPERLY GRADED RECLAIMED CONCRETE AGGREGATE BASE MATERIAL. ALL DEFECTS IN MATERIALS AND CONSTRUCTION SHALL BE CORRECTED BY THE CONTRACTOR, AT HIS EXPENSE, AND TO THE SATISFACTION OF THE COUNTY ENGINEER.

PRIMING AND MAINTENANCE

APPLY THE PRIME COAT ONLY WHEN THE BASE MEETS THE SPECIFIED DENSITY REQUIREMENTS AND WHEN THE MOISTURE CONTENT. AT THE TIME OF PRIMING, ENSURE THAT THE BASE IS FIRM, UNYIELDING AND IN SUCH CONDITION THAT NO UNDUE DISTORTION WILL OCCUR. MAINTAIN THE TRUE CROWN AND TEMPLATE, WITH NO RUTTING OR DISTORTION, WHILE APPLYING THE SURFACE COURSE.

EMBANKMENT MATERIAL UNDER CONCRETE PAVEMENT SHALL BE PER FDOT INDEX No. 505.

PASCO COUNTY TESTING SPECIFICATIONS ON CRUSHED CONCRETE BASE

TESTS FOR BASE THICKNESS, AND DENSITY SHALL BE LOCATED NO MORE THAN THREE HUNDRED (300) FEET APART AND SHALL BE STAGGERED TO THE LEFT, RIGHT, AND ON THE CENTERLINE OF ROADWAY. THERE SHALL BE NO LESS THAN ONE (1) TEST PER STREET. BEARING VALUE, GRADATION AND FIELD TEST FOR SIEVE ANALYSIS OF FINE AND COARSE AGGREGATES (ASTM C-136) SHALL BE NO MORE THAN FIVE HUNDRED (500) FEET.

EXAMPLE: A SEVEN HUNDRED FEET ROAD WOULD REQUIRE TWO FIELD LBR AND GRADATION TESTS, THREE FIELD DENSITY AND THICKNESS TESTS ALONG WITH THE APPROPRIATE LAB TESTING.

NOTE:
NO DEVIATIONS TO THIS DETAIL WILL BE PERMITTED UNLESS APPROVED BY THE COUNTY ENGINEER.
ANY PROPOSED ALTERATIONS SHALL BE CLEARLY IDENTIFIED AND HIGHLIGHTED ON DETAIL.

PASCO COUNTY ENGINEERING SERVICES DESIGN STANDARDS	CRUSHED - CONCRETE BASE SPECIFICATIONS		Sheet No. 2 of 2
	APPROVED BY JCW	BCC APPROVAL REVISED	Index No. 104

C:\Standards\Final\104_Crush-Conc_BaseSpec.dwg 05/15/09

Starkey Ranch Improvements - New Construction

Known
LBR= 30 (MEI Engineering Document Dated August 2013)

M_R= 10,000 PSI (Table 5.1, Sheet 5.6.0, Flexible Pavement Design Manual [FPDM])

%R= 85 (Table 5.2, Sheet 5.6.0, Flexible Pavement Design Manual [FPDM])

ESAL = 664, 826 (use 670,000) (See Lincks ESAL calculations provided)

Traffic Level B (Sheet 2.5.0, FPDM)

Determine the required structural number (SN_R) (See Table A.4A, Sheet A.11.0, FPDM)

@ 670,000 $ESAL_C$ Using M_R = 10,000

2.78

Determine the layer thicknesses to obtain the required structural number

$SN_C = (a_1 \times D_1) + (a_2 \times D_2) + (a_3 \times D_3) + \ldots + (a_N \times D_N)$

where:

SN_C = The total calculated strength of the pavement layers and has units of inches
a_1 = Layer coefficient of the 1st layer.
D_1 = Layer thickness in inches of the 1st layer.
Layer 1 is generally the Friction Course.
Layer 2 is generally the Structural Course.
Layer 3 is generally the Base Course.
Layer 4 is generally the Stabilization.
a_N = Layer coefficient of the Nth layer.
D_N = Layer thickness in inches of the Nth layer.

Structural layer coefficients (a_N) are given in Table 5.4, Sheet 5.11.0, FPDM

$2.78 = (0.44 \times 1.5") + (a_2 \times D_2) + (a_3 \times D_3) + (0.08 \times 12")$

$1.82 = (a_2 \times D_2) + (a_3 \times D_3)$ (Table 5.9, Sheet 5.29.0, FPDM)

Per table 5.9, 1.5" of Structural Course and Base Group 5 required.
Per table 5.5, 2.0" of Structural Course and Base Group 6 is minimum allowed Pavement Design.

Pavement Design

Layer	Material Description	Stuctural Coef.	Thickness (in)	Calculated SN
1	FC-12.5	0.44	1.5	0.66
2	Type SP asphalt	0.44	2	0.88
3	Crushed Conc. Base	0.15	8	1.20
4	Type B Stabilization	0.08	12	0.96
Total				**3.70**

$SN_C > SN_R$ OK

PAVEMENT CONSTRUCTION NOTES: SOIL-CEMENT BASE

1. SOIL-CEMENT MIX DESIGN SHALL BE PROVIDED A MINIMUM 30 DAYS IN ADVANCE OF PLACEMENT OF BASE MATERIAL FOR APPROVAL BY THE ENGINEER. THE SOIL-CEMENT PRODUCT SHALL BE IN ACCORDANCE WITH PCA STANDARDS.
2. SOIL-CEMENT SURFACE SHALL BE INSPECTED AND APPROVED BY THE ENGINEER PRIOR TO ANY PAVING OPERATION.
3. SUBGRADE FOR SOIL-CEMENT SHALL BE PREPARED IN ACCORDANCE WITH FDOT INDEX NO. 505, LATEST EDITION. EMBANKMENT FILLS OR NATURAL SANDS TO 24-INCHES BELOW THE BOTTOM OF THE PAVEMENT BASE (IF NO STABILIZED SUBGRADE), OR TO 24-INCHES BELOW THE BOTTOM OF STABILIZED SUBGRADE, SHALL BE SANDY SOILS (A-3 OR SP/SP-SM) WITH TYPICALLY 15% FINES OR LESS PASSING THE NO. 200 SIEVE.
4. SUBGRADE UNDER A SOIL-CEMENT BASE SHALL BE PROOF-ROLLED TO GRADE, AS DIRECTED BY THE ENGINEER AND APPROVED BY THE ENGINEER WITH SUITABLE COMPACTION EQUIPMENT TO ACHIEVE A DENSITY OF NINETY-EIGHT (98%) PERCENT MODIFIED PROCTOR FOR A DEPTH OF TWELVE (12) INCHES PRIOR TO PLACING SOIL-CEMENT BASE.
5. SUBGRADE UNDER SOIL-CEMENT BASE SHALL NOT BE STABILIZED UNLESS OTHERWISE DIRECTED BY ENGINEER OF RECORD.

ALTERNATE CRUSHED CONCRETE BASE MATERIAL

1. PAVEMENT WEARING SURFACE SHALL BE ASPHALTIC CONCRETE OF TYPE AND THICKNESS SHOWN IN DETAIL AND SHALL MEET CURRENT DEPARTMENT OF TRANSPORTATION SPECIFICATIONS.
2. PAVEMENT BASE SHALL BE CRUSHED CONCRETE, AS DESIGNATED IN PLANS, AND SHALL BE COMPACTED TO A MINIMUM THICKNESS AS SHOWN.
3. CRUSHED CONCRETE ROAD BASE MATERIAL SHALL BE OF UNIFORM QUALITY, FREE OF ALL ORGANICS, STEEL REBAR, ASPHALT DEBRIS, AND ANY OTHER DELETERIOUS MATERIALS.
4. CRUSHED CONCRETE ROAD BASE MATERIAL SHALL GENERALLY CONFORM TO THE GRADATION CHART FOR GRADED AGGREGATE BASE, FDOT SECTION 204 AND 901, TESTED AT A FREQUENCY REQUIRED BY THE GOVERNING AGENCY HAVING JURISDICTION. IN ADDITION, CRUSHED CONCRETE SHALL CONFORM TO THE APPLICABLE SPECIFICATION CONTAINED WITHIN PASCO COUNTY DESIGN STANDARDS, "CRUSHED CONCRETE BASE SPECIFICATION - INDEX 104."
5. CRUSHED CONCRETE ROAD BASE MATERIAL SHALL HAVE A MINIMUM COMPACTED DRY DENSITY OF 114.0 PCF (PER AASHTO T-180), AND A MINIMUM LIMEROCK BEARING RATIO (LBR) OF 150 (UNDER-TOLERANCE +/- 5%), TESTED AT A FREQUENCY REQUIRED BY THE GOVERNING AGENCY HAVING JURISDICTION, OR IN THE ABSENCE THEREOF, BY MINIMUM FDOT STANDARDS.
6. BASE SINGLE-COURSE LIFTS SHALL NOT EXCEED 6 INCHES (COMPACTED, 8 INCHES LOOSE).
7. CRUSHED CONCRETE ROAD BASE SHALL BE COMPACTED TO A MINIMUM OF 100% OF MODIFIED PROCTOR PER AASHTO T-180, TESTED AT A FREQUENCY REQUIRED BY THE GOVERNING AGENCY HAVING JURISDICTION, OR IN THE ABSENCE THEREOF, BY MINIMUM FDOT STANDARDS.
8. CRUSHED CONCRETE BASE SHALL HAVE A 12-INCH THICK STABILIZED SUBGRADE, TYPE "B" STABILIZATION IN ACCORDANCE WITH FDOT SECTION 160 AND SHALL HAVE A MINIMUM LIMEROCK BEARING RATION (LBR) OF 40 OR GREATER. SUBGRADE SHALL BE COMPACTED TO THE MINIMUM THICKNESS AS SHOWN. SUBGRADE SHALL BE COMPACTED TO A MINIMUM OF 98% MODIFIED PROCTOR PER AASHTO T-180.
9. COMPACTED SUBGRADE (BENEATH STABILIZED SUBGRADE, IF REQUIRED, OR BENEATH BASE MATERIALS) SHALL BE PREPARED IN ACCORDANCE WITH FDOT INDEX 505, LATEST EDITION. EMBANKMENT FILLS OR NATURAL SANDS TO 24 INCHES BELOW THE BOTTOM OF THE PAVEMENT BASE (IF NO STABILIZED SUBGRADE), OR TO 24 INCHES BELOW THE BOTTOM OF STABILIZED SUBGRADE, SHALL BE SANDY SOILS (A-3 OR SP/SP-SM) WITH TYPICALLY 15% FINES OR LESS PASSING THE NO. 200 SIEVE.
10. CRUSHED CONCRETE BASE SURFACE SHALL BE INSPECTED AND APPROVED BY THE ENGINEER PRIOR TO ANY PAVING OPERATION.
11. ALL CURBS AND GUTTERS SHALL BE PLACED ON A FOUNDATION OF TYPE "B" STABILIZED SUBGRADE WITH A MINIMUM LBR VALUE OF 40 (OR A MINIMUM FBV OF 75) WHICH HAS BEEN COMPACTED TO A MINIMUM DENSITY OF NINETY-EIGHT PERCENT (98%) OF THE MAXIMUM DENSITY AS DETERMINED BY AASHTO T-180 FOR A MINIMUM DEPTH OF TWELVE (12) INCHES.
12. ALL PORTLAND CEMENT CONCRETE SHALL HAVE A MINIMUM COMPRESSIVE STRENGTH OF 3000 PSI.
13. ROADWAY UNDERDRAIN HAS BEEN LOCATED ON THESE PLANS TO ENSURE ADEQUATE BASE PROTECTION. PRIOR TO CURB CONSTRUCTION, THE GEOTECHNICAL ENGINEER SHALL REVIEW THE PREDESIGN BORINGS AND, ALONG WITH THEIR FIELD INSPECTION, MAKE A RECOMMENDATION REGARDING ADDITIONAL UNDERDRAIN REQUIREMENTS.
14. SHOULD NO UNDERDRAIN BE SPECIFIED ON THE PLANS, THE CONTRACTOR SHALL INCLUDE 1,000 LINEAR FEET OF UNDERDRAIN AT UNIT PRICES FOR BID PURPOSES.
15. ALL TESTING REFERENCED ABOVE SHALL, AT A MINIMUM, BE AT THE FREQUENCY REQUIRED BY THE GOVERNING AGENCY HAVING JURISDICTION, OR IN THE ABSENCE THEREOF, BY MINIMUM FDOT STANDARDS.

CONTRACTOR MAY PROPOSE ALTERNATE PAVEMENT DESIGNS.
CONTRACTOR SHALL SUBMIT ANY PAVEMENT ALTERNATIVES TO ENGINEER FOR APPROVAL PRIOR TO FINAL SUBGRADE PREPARATIONS.

PROPOSED COLLECTOR ROADWAY DESIGN

MIN STR. # REQUIRED FOR COLLECTOR ROADS = 3.7
* PER PASCO COUNTY LDC SECTION 610.3

LAYER COEFFICIENTS	THICKNESS
0.44 - TYPE FC-12.5 FRICTION COURSE	1.5"
0.44 - TYPE SP-12.5 ASPHALT SURFACE COURSE	2.00"
0.15 - SOIL CEMENT BASE COURSE	11.5"
0.04 - COMPACTED SUBGRADE (98% MOD. PROCTOR)	12"

SN = (0.44x1.5)+(0.44x2.00)+(0.15x11.5)+(0.04x12) = 3.75
SN SNR
3.75 ≥ 3.70

ALTERNATE COLLECTOR ROADWAY DESIGN

MIN STR. # REQUIRED FOR COLLECTOR ROADS = 3.7
* PER PASCO COUNTY LDC SECTION 610.3

LAYER COEFFICIENTS	THICKNESS
0.44 - TYPE FC-12.5 FRICTION COURSE	1.5"
0.44 - TYPE SP-12.5 ASPHALT SURFACE COURSE	2.00"
0.15 - CRUSHED CONCRETE BASE COURSE (LBR 150)	8"
0.08 - STABILIZED SUBGRADE (12" MIN.)	12"

SN = (0.44x1.5)+(0.44x2.00)+(0.15x8)+(0.08x12) = 3.70
SN SNR
3.70 ≥ 3.70

HEIDT DESIGN
Civil Engineering • Planning & GIS
Transportation Engineering
Ecological Services • Landscape Architecture
Engineering Business Certificate of Authorization No. 28782
Landscape Architecture Certificate of Authorization No. LC26000405
5806-B Breckenridge Pkwy.
Tampa, Florida 33610
Office: 813-253-5311
Fax: 813-464-7629
www.HeidtDesign.com

RANGELAND BOULEVARD
WEST EXTENSION PHASE 2

TYPICAL ROADWAY SECTIONS

PREPARED FOR: WS-TSR, LLC

	DATE	DESCRIPTION
1	12/30/2015	INITIAL REVIEW SUBMITTAL

PROJECT NO:	TSR SR 1072
FILE:	RS
DESIGN BY:	MOORE
DRAWN BY:	JONES

FLORIDA PROFESSIONAL ENGINEER
GARY D. MILLER
DATE:
REGISTRATION NO. 52717

C-202

R:\STARKEY RANCH\RANGELAND BLVD WEST EXT PHASE 2\ENGINEERING\RS.DWG-C-202 2015/12/30 9:40 AM MARK JONES

© COPYRIGHT 2015, HEIDT DESIGN, LLC. ALL RIGHTS RESERVED. NO DOCUMENTATION (INCLUDING BUT NOT LIMITED TO DRAWINGS OR EXHIBITS) MAY BE COPIED, REPRODUCED, OR DISTRIBUTED UNLESS SPECIFIC WRITTEN PERMISSION HAS BEEN OBTAINED FROM HEIDT DESIGN, LLC. IN ADVANCE. CONSENT IS HEREBY GRANTED SPECIFICALLY TO GOVERNMENTAL AGENCIES TO REPRODUCE THIS DOCUMENTATION IN COMPLIANCE WITH F.S. CHAPTER 119.

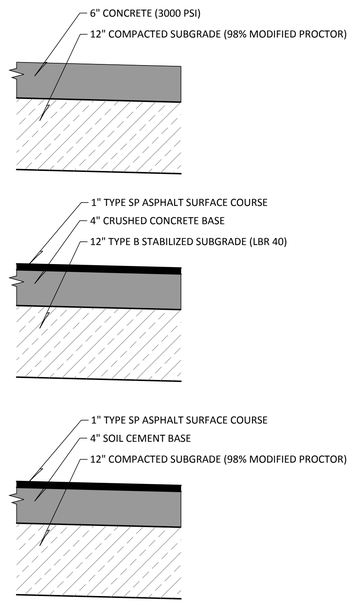

TYPICAL TRAIL SECTION ALTERNATIVES
WIDTH VARIES 6' TO 14' PER PLAN

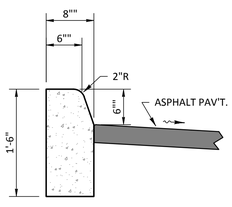

TYPE "D" CURB
SCALE: 1" = 1'

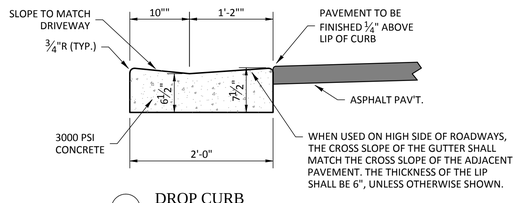

DROP CURB
SCALE: 1" = 1'

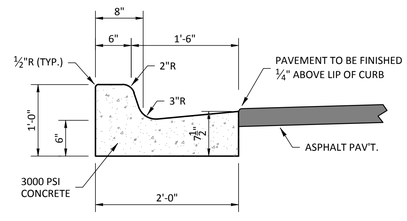

TYPE "F" CURB & GUTTER
SCALE: 1" = 1'

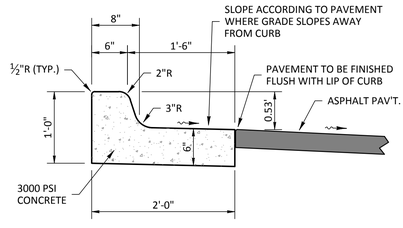

TYPE "F" CURB & GUTTER ROTATED
SCALE: 1" = 1'

HEIDT DESIGN
Civil Engineering • Planning & GIS
Transportation Engineering
Ecological Services • Landscape Architecture
Engineering Business Certificate of Authorization No. 28782
Landscape Architecture Certificate of Authorization No. LC26000405
5806-B Breckenridge Pkwy.
Tampa, Florida 33610
Office: 813-253-5311
Fax: 813-464-7629
www.HeidtDesign.com

RANGELAND BOULEVARD
WEST EXTENSION PHASE 2

TYPICAL ROADWAY SECTIONS

PREPARED FOR: WS-TSR, LLC

	DATE	DESCRIPTION
1	12/30/2015	INITIAL REVIEW SUBMITTAL

PROJECT NO:	TSR SR 1072
FILE:	RS
DESIGN BY:	MOORE
DRAWN BY:	JONES

FLORIDA PROFESSIONAL ENGINEER

GARY D. MILLER
DATE:
REGISTRATION NO. 52717

C-203

© COPYRIGHT 2015, HEIDT DESIGN, LLC. ALL RIGHTS RESERVED. NO DOCUMENTATION (INCLUDING BUT NOT LIMITED TO DRAWINGS) OR EXHIBIT TO MAY BE REPRODUCED OR DISTRIBUTED WITHOUT THE EXPRESS WRITTEN PERMISSION OF HEIDT DESIGN, LLC. THE DOCUMENTATION IS PROVIDED "AS IS" IS HEREBY GRANTED SPECIFICALLY TO GOVERNMENTAL AGENCIES TO REPRODUCE THIS DOCUMENTATION IN COMPLIANCE WITH F.S. CHAPTER 119.

R:\STARKEY RANCH\RANGELAND BLVD WEST EXT PHASE 2\ENGINEERING\DRS.DWG-C-203 2015/12/30 9:40 AM MARK JONES

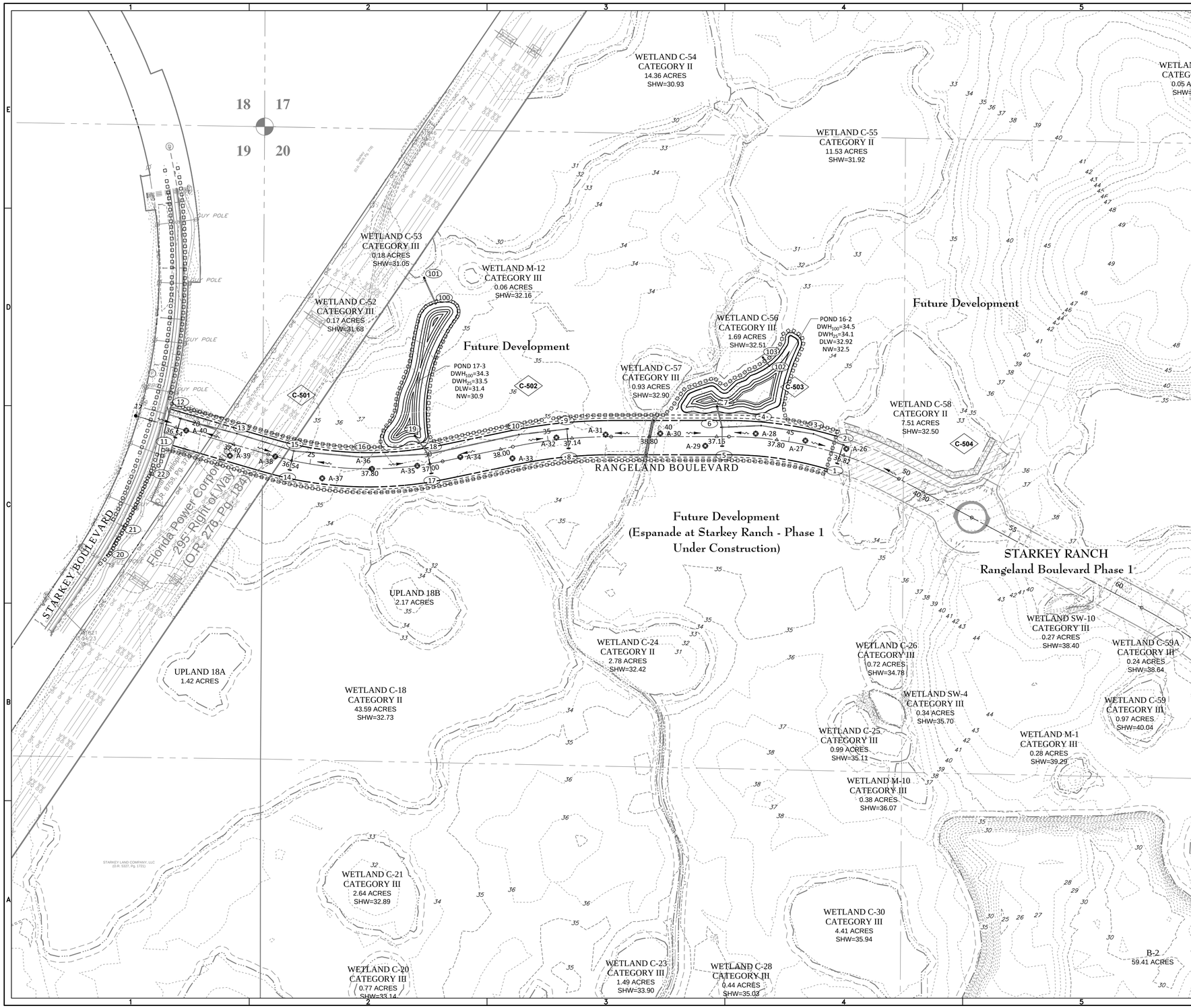

N

0 200 400

GRAPHIC SCALE: 1" = 200'

ELEVATIONS BASED ON:
NORTH AMERICAN VERTICAL DATUM 1988
CONVERSION:
NAVD 88 TO NGVD 29 = +0.85

GENERAL LEGEND

- WETLAND LINE
- WETLAND CONS. AREA SETBACK
- 12" Oak — EXISTING TREE TO BE REMOVED
- 12" Oak — EXISTING TREE TO BE PROTECTED
- PROPOSED TREE BARRICADE
- STAKED EROSION CONTROL
- FLOODPLAIN LIMITS
- C-510 — PLAN & PROFILE SHEET NUMBER

DRAINAGE LEGEND

EXISTING	PROPOSED	
		STORM DRAINAGE STRUCTURE & PIPE
10	10	STRUCTURE NO.
+15.0	15.00	SPOT ELEVATION GROUND
+15.00	15.00	SPOT ELEVATION PAVEMENT
	15.00 / 14.50	TOP OF CURB / SIDEWALK EDGE OF PAVEMENT
	15.00	PROFILE GRADE ELEVATION REFERENCE
15	15.0	CONTOUR
		DIRECTION OF SURFACE FLOW
UDCO	UDCO	UNDERDRAIN WITH CLEANOUT
		STAKED EROSION CONTROL
	AB#	SOIL BORING LOCATION
	1.00 AC.	MAJOR DRAINAGE AREA ACREAGE
		MAJOR DRAINAGE AREA
	0.10 AC.	MINOR DRAINAGE AREA ACREAGE
		MINOR DRAINAGE AREA

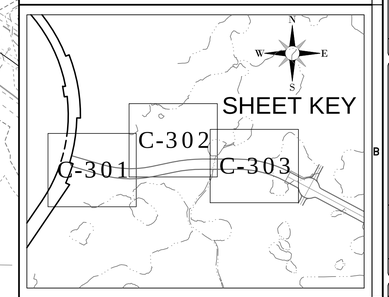

HEIDT DESIGN
Civil Engineering • Planning & GIS
Transportation Engineering
Ecological Services • Landscape Architecture
Engineering Business Certificate of Authorization No. 28782
Landscape Architecture Certificate of Authorization No. LC26000415
5806-B Breckenridge Pkwy.
Tampa, Florida 33610
Office: 813-253-5311
Fax: 813-464-7629
www.HeidtDesign.com

RANGELAND BOULEVARD WEST EXTENSION PHASE 2

MASTER DRAINAGE PLAN

PREPARED FOR: WS-TSR, LLC

DATE	DESCRIPTION
12/30/2015	INITIAL REVIEW SUBMITTAL

PROJECT NO:	TSR SR 1072
FILE:	MD-KEY
DESIGN BY:	MOORE
DRAWN BY:	JONES

FLORIDA PROFESSIONAL ENGINEER

GARY D. MILLER
DATE:
REGISTRATION NO. 52717

C-300

P:\STARKEY RANCH\RANGELAND BLVD WEST EXT PHASE 2\ENGINEERING\MD-KEY.DWG-C-300 2015\12\30 9:41 AM MARK JONES

© COPYRIGHT 2015, HEIDT DESIGN, LLC. ALL RIGHTS RESERVED. NO DOCUMENTATION, INCLUDING BUT NOT LIMITED TO DRAWINGS OR EXHIBITS MAY BE COPIED, REPRODUCED, OR DISTRIBUTED UNLESS SPECIFIC WRITTEN PERMISSION HAS BEEN OBTAINED FROM HEIDT DESIGN LLC. IN ADVANCE. CONSENT IS NEVER GRANTED SPECIFICALLY TO GOVERNMENTAL AGENCIES TO REPRODUCE THIS DOCUMENTATION IN COMPLIANCE WITH F.S. CHAPTER 119.

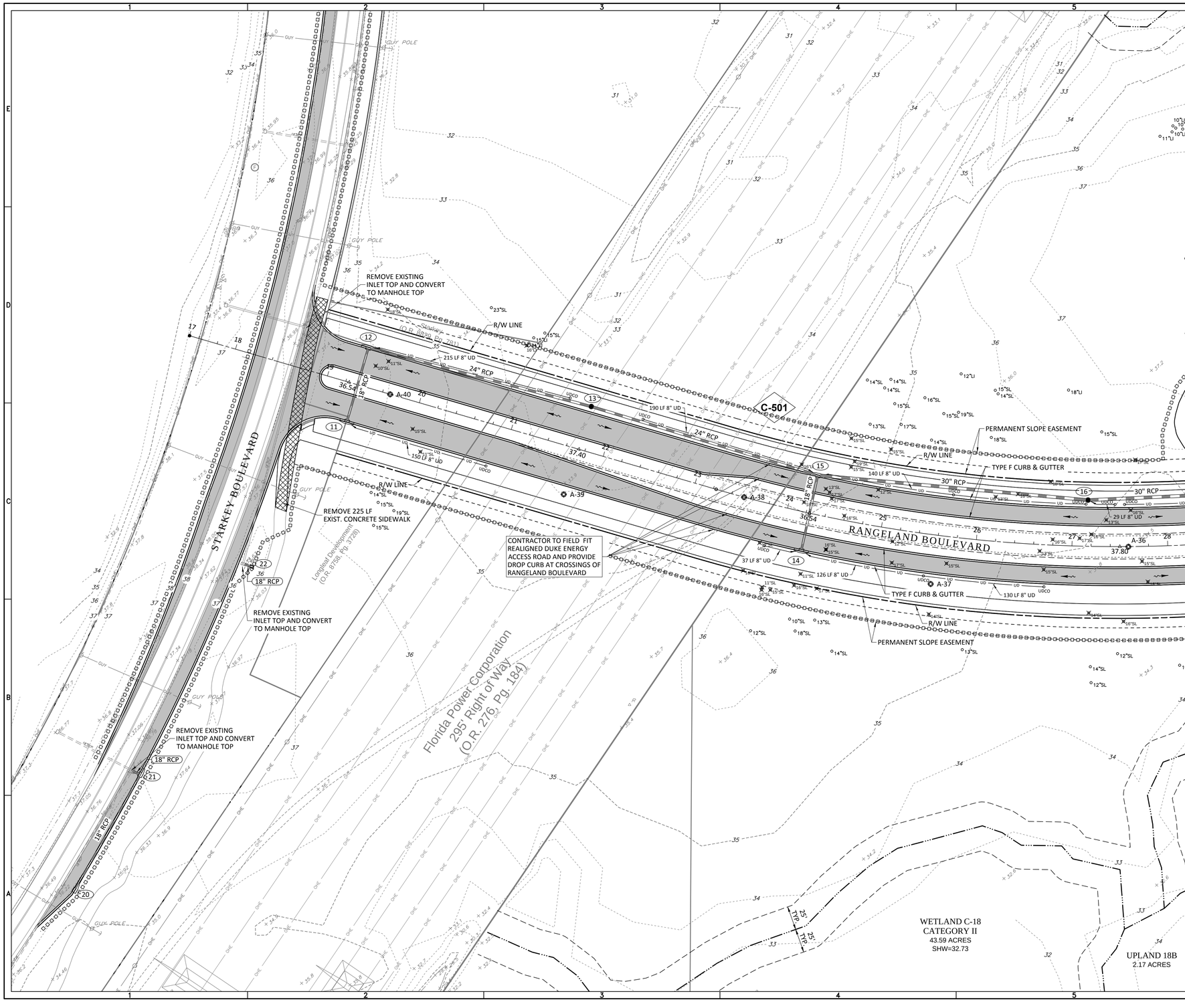

N

0 50 100

GRAPHIC SCALE: 1" = 50'

ELEVATIONS BASED ON:
NORTH AMERICAN VERTICAL DATUM 1988
CONVERSION:
NAVD 88 TO NGVD 29 = +0.85

GENERAL LEGEND

- WETLAND LINE
- WETLAND CONS. AREA SETBACK
- 12" Oak — EXISTING TREE TO BE REMOVED
- 12" Oak — EXISTING TREE TO BE PROTECTED
- PROPOSED TREE BARRICADE
- STAKED EROSION CONTROL
- FLOODPLAIN LIMITS
- C-510 — PLAN & PROFILE SHEET NUMBER

DRAINAGE LEGEND

EXISTING	PROPOSED	
		STORM DRAINAGE STRUCTURE & PIPE
10	10	STRUCTURE NO.
+15.0 / +15.00	15.00	SPOT ELEVATION GROUND
	15.00	SPOT ELEVATION PAVEMENT
	15.00 / 14.50	TOP OF CURB / SIDEWALK EDGE OF PAVEMENT
	15.00	PROFILE GRADE ELEVATION REFERENCE
15	15.0	CONTOUR
		DIRECTION OF SURFACE FLOW
UDCO	UDCO	UNDERDRAIN WITH CLEANOUT
		STAKED EROSION CONTROL
	AB#	SOIL BORING LOCATION

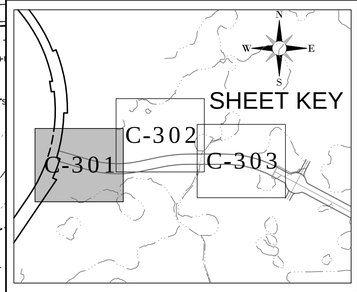

HEIDT DESIGN
Civil Engineering • Planning & GIS
Transportation Engineering
Ecological Services • Landscape Architecture
Engineering Business Certificate of Authorization No. 28782
Landscape Architecture Certificate of Authorization No. LC26000415
5806-B Breckenridge Pkwy.
Tampa, Florida 33610
Office: 813-253-5311
Fax: 813-464-7629
www.HeidtDesign.com

RANGELAND BOULEVARD WEST EXTENSION PHASE 2

GRADING AND DRAINAGE PLAN

PREPARED FOR: WS-TSR, LLC

DATE	DESCRIPTION

DATE	DESCRIPTION
12/30/2015	INITIAL REVIEW SUBMITTAL
1	

PROJECT NO:	TSR SR 1072
FILE:	GD
DESIGN BY:	MOORE
DRAWN BY:	JONES

FLORIDA PROFESSIONAL ENGINEER

GARY D. MILLER
DATE:
REGISTRATION NO. 52717

C-301

R:\STARKEY RANCH\RANGELAND BLVD WEST EXT PHASE 2\ENGINEERING\GD DWG-C-301 2015\12\30 9:42 AM MARK JONES

© COPYRIGHT 2015, HEIDT DESIGN, LLC. ALL RIGHTS RESERVED. NO DOCUMENTATION (INCLUDING BUT NOT LIMITED TO DRAWINGS OR EXHIBITS) MAY BE COPIED, REPRODUCED, OR DISTRIBUTED UNLESS SPECIFIC WRITTEN PERMISSION HAS BEEN OBTAINED FROM HEIDT DESIGN, LLC. IN ADVANCE. CONSENT IS HEREBY GRANTED SPECIFICALLY TO GOVERNMENTAL AGENCIES TO REPRODUCE THIS DOCUMENTATION IN COMPLIANCE WITH F.S. CHAPTER 119.

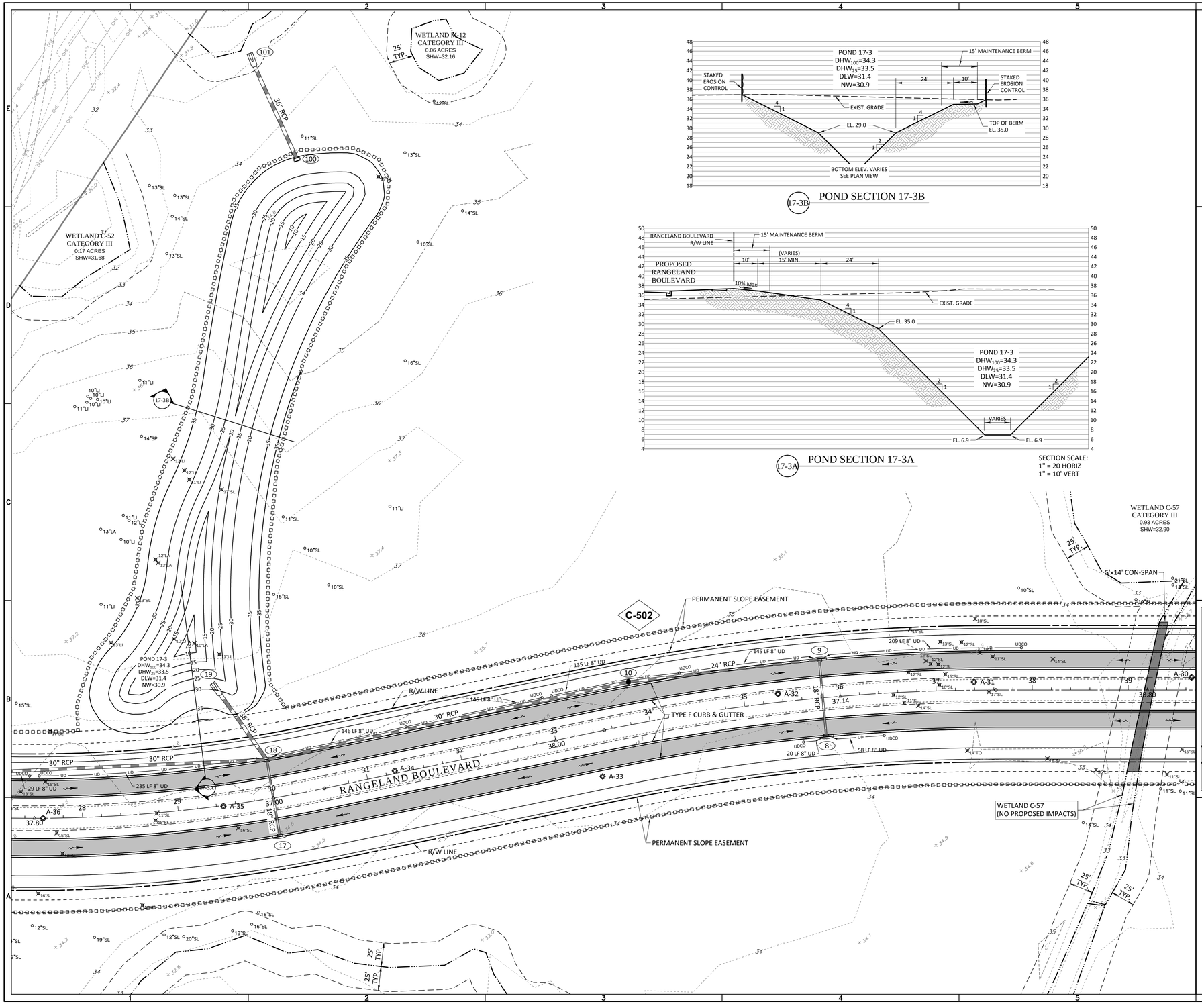

17-3B POND SECTION 17-3B

17-3A POND SECTION 17-3A

SECTION SCALE:
1" = 20 HORIZ
1" = 10' VERT

N

0 ## ###

GRAPHIC SCALE: 1" = ##'

ELEVATIONS BASED ON:
NORTH AMERICAN VERTICAL DATUM 1988
CONVERSION:
NAVD 88 TO NGVD 29 = +0.85

GENERAL LEGEND

	WETLAND LINE
	WETLAND CONS. AREA SETBACK
12" Oak	EXISTING TREE TO BE REMOVED
12" Oak	EXISTING TREE TO BE PROTECTED
	PROPOSED TREE BARRICADE
	STAKED EROSION CONTROL
	FLOODPLAIN LIMITS
C-510	PLAN & PROFILE SHEET NUMBER

DRAINAGE LEGEND

EXISTING	PROPOSED	
		STORM DRAINAGE STRUCTURE & PIPE
10	10	STRUCTURE NO.
+15.0	15.00	SPOT ELEVATION GROUND
+15.00	15.00	SPOT ELEVATION PAVEMENT
	15.00 / 14.50	TOP OF CURB / SIDEWALK EDGE OF PAVEMENT
	15.00	PROFILE GRADE ELEVATION REFERENCE
15	15.0	CONTOUR
		DIRECTION OF SURFACE FLOW
UDCO	UDCO	UNDERDRAIN WITH CLEANOUT
		STAKED EROSION CONTROL
AB#		SOIL BORING LOCATION

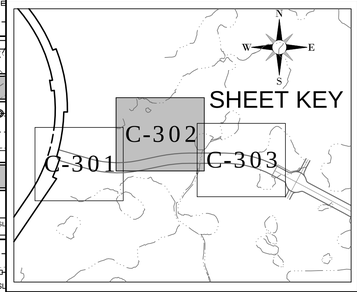

HEIDT DESIGN
Civil Engineering • Planning & GIS
Transportation Engineering
Ecological Services • Landscape Architecture
Engineering Business Certificate of Authorization No. 28782
Landscape Architecture Certificate of Authorization No. LC26000415
5806-B Breckenridge Pkwy.
Tampa, Florida 33610
Office: 813-253-5311
Fax: 813-464-7629
www.HeidtDesign.com

RANGELAND BOULEVARD WEST EXTENSION PHASE 2

GRADING AND DRAINAGE PLAN

PREPARED FOR: WS-TSR, LLC

DATE	DESCRIPTION

DATE	DESCRIPTION
12/30/2015	INITIAL REVIEW SUBMITTAL

PROJECT NO:	TSR SR 1072
FILE:	GD
DESIGN BY:	MOORE
DRAWN BY:	JONES

FLORIDA PROFESSIONAL ENGINEER

GARY D. MILLER
DATE:
REGISTRATION NO. 52717

C-302

R:\STARKEY RANCH\RANGELAND BLVD WEST EXT PHASE 2\ENGINEERING\GD DWG-C-302 2015\12\30 9:42 AM MARK JONES

© COPYRIGHT 2014, HEIDT DESIGN, LLC. ALL RIGHTS RESERVED. NO DOCUMENTATION INCLUDING BUT NOT LIMITED TO DRAWINGS OR EXHIBITS MAY BE COPIED, REPRODUCED, OR DISTRIBUTED UNLESS SPECIFIC WRITTEN PERMISSION HAS BEEN OBTAINED FROM HEIDT DESIGN, LLC. IN ADVANCE. CONSENT IS HEREBY GRANTED SPECIFICALLY TO GOVERNMENTAL AGENCIES TO REPRODUCE THIS DOCUMENTATION IN COMPLIANCE WITH U.S. CHAPTER 119.

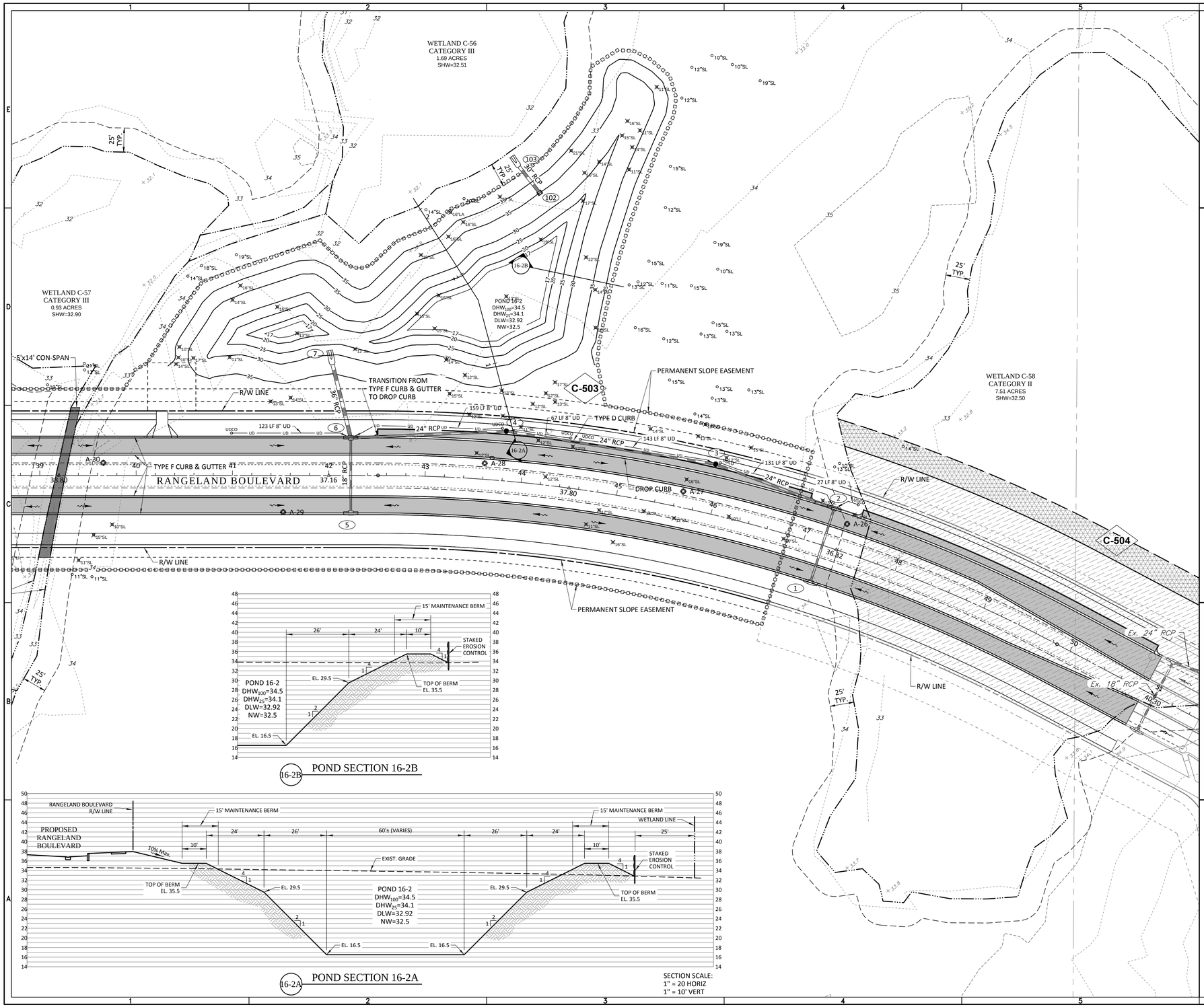

N

0 ## ###

GRAPHIC SCALE: 1" = ##'

ELEVATIONS BASED ON:
NORTH AMERICAN VERTICAL DATUM 1988
CONVERSION:
NAVD 88 TO NGVD 29 = +0.85

GENERAL LEGEND

- WETLAND LINE
- WETLAND CONS. AREA SETBACK
- 12" Oak — EXISTING TREE TO BE REMOVED
- 12" Oak — EXISTING TREE TO BE PROTECTED
- PROPOSED TREE BARRICADE
- STAKED EROSION CONTROL
- FLOODPLAIN LIMITS
- C-510 — PLAN & PROFILE SHEET NUMBER

DRAINAGE LEGEND

EXISTING	PROPOSED	
		STORM DRAINAGE STRUCTURE & PIPE
10	10	STRUCTURE NO.
+15.0 / +15.00	15.00	SPOT ELEVATION GROUND
	15.00	SPOT ELEVATION PAVEMENT
	15.00 / 14.50	TOP OF CURB / SIDEWALK EDGE OF PAVEMENT
	15.00	PROFILE GRADE ELEVATION REFERENCE
15	15.0	CONTOUR
		DIRECTION OF SURFACE FLOW
UDCO	UDCO	UNDERDRAIN WITH CLEANOUT
		STAKED EROSION CONTROL
AB#		SOIL BORING LOCATION

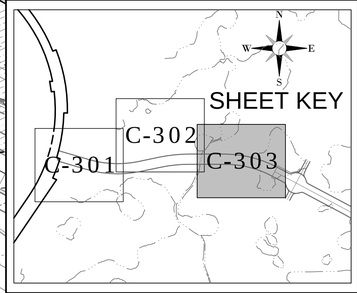

HEIDT DESIGN
Civil Engineering • Planning & GIS
Transportation Engineering
Ecological Services • Landscape Architecture
Engineering Business Certificate of Authorization No. 28782
Landscape Architecture Certificate of Authorization No. LC26000415

5806-B Breckenridge Pkwy.
Tampa, Florida 33610
Office: 813-253-5311
Fax: 813-464-7629

www.HeidtDesign.com

RANGELAND BOULEVARD WEST EXTENSION PHASE 2

GRADING AND DRAINAGE PLAN

PREPARED FOR: WS-TSR, LLC

DATE	DESCRIPTION

DATE	DESCRIPTION
12/30/2015	INITIAL REVIEW SUBMITTAL

PROJECT NO:	TSR SR 1072
FILE:	GD
DESIGN BY:	MOORE
DRAWN BY:	JONES

FLORIDA PROFESSIONAL ENGINEER

GARY D. MILLER
DATE:
REGISTRATION NO. 52717

C-303

R:\STARKEY RANCH\RANGELAND BLVD WEST EXT PHASE 2\ENGINEERING\GD.DWG-C-303 2015\12\30\ 9:42 AM MARK JONES

© COPYRIGHT 2015, HEIDT DESIGN, LLC. ALL RIGHTS RESERVED. NO DOCUMENTATION, INCLUDING BUT NOT LIMITED TO DRAWINGS OR EXHIBITS MAY BE COPIED, REPRODUCED, OR DISTRIBUTED UNLESS SPECIFIC WRITTEN PERMISSION HAS BEEN OBTAINED FROM HEIDT DESIGN, LLC. IN ADVANCE. CONSENT IS HEREBY GRANTED SPECIFICALLY TO GOVERNMENTAL AGENCIES TO REPRODUCE THIS DOCUMENTATION IN COMPLIANCE WITH F.S. CHAPTER 119.

N

0 30 60

GRAPHIC SCALE: 1" = 30'

ELEVATIONS BASED ON:
NORTH AMERICAN VERTICAL DATUM 1988
CONVERSION:
NAVD 88 TO NGVD 29 = +0.85

GENERAL LEGEND

- WETLAND LINE
- WETLAND CONS. AREA SETBACK
- 12" Oak — EXISTING TREE TO BE REMOVED
- 12" Oak — EXISTING TREE TO BE PROTECTED
- PROPOSED TREE BARRICADE
- STAKED EROSION CONTROL
- FLOODPLAIN LIMITS
- C-810 — PLAN & PROFILE SHEET NUMBER

DRAINAGE LEGEND

EXISTING	PROPOSED	
		STORM DRAINAGE STRUCTURE & PIPE
10	10	STRUCTURE NO.
+15.0	15.00	SPOT ELEVATION GROUND
+15.00	15.00	SPOT ELEVATION PAVEMENT
	15.00 / 14.50	TOP OF CURB / SIDEWALK EDGE OF PAVEMENT
	15.00	PROFILE GRADE ELEVATION REFERENCE
15	15.0	CONTOUR
		DIRECTION OF SURFACE FLOW
UDCO	UDCO	UNDERDRAIN WITH CLEANOUT
		STAKED EROSION CONTROL

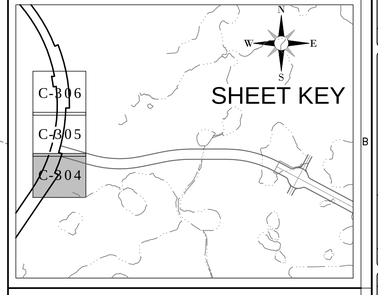

HEIDT DESIGN
Civil Engineering • Planning & GIS
Transportation Engineering
Ecological Services • Landscape Architecture
Engineering Business Certificate of Authorization No. 28782
Landscape Architecture Certificate of Authorization No. LC26000415
5806-B Breckenridge Pkwy.
Tampa, Florida 33610
Office: 813-253-5311
Fax: 813-464-7629
www.HeidtDesign.com

RANGELAND BOULEVARD WEST EXTENSION IMPROVEMENTS PLAN

PREPARED FOR: WS-TSR, LLC

DATE	DESCRIPTION

DATE	DESCRIPTION
12/30/2015	INITIAL REVIEW SUBMITTAL

PROJECT NO:	TSR SR 1072
FILE:	INT
DESIGN BY:	MOORE
DRAWN BY:	JONES

FLORIDA PROFESSIONAL ENGINEER

GARY D. MILLER
DATE:
REGISTRATION NO. 52717

C-304

R:\STARKEY RANCH\RANGELAND BLVD WEST EXT PHASE 2\ENGINEERING\INT DWG-C-304 2015\12\30 9:43 AM MARK JONES

© COPYRIGHT 2015, HEIDT DESIGN, LLC. ALL RIGHTS RESERVED. NO DOCUMENTATION (INCLUDING BUT NOT LIMITED TO DRAWINGS OR EXHIBITS) MAY BE COPIED, REPRODUCED, OR DISTRIBUTED UNLESS SPECIFIC WRITTEN PERMISSION HAS BEEN OBTAINED FROM HEIDT DESIGN, LLC IN ADVANCE. CONSENT IS HEREBY GRANTED SPECIFICALLY TO GOVERNMENTAL AGENCIES TO REPRODUCE THIS DOCUMENTATION IN COMPLIANCE WITH F.S. CHAPTER 119.

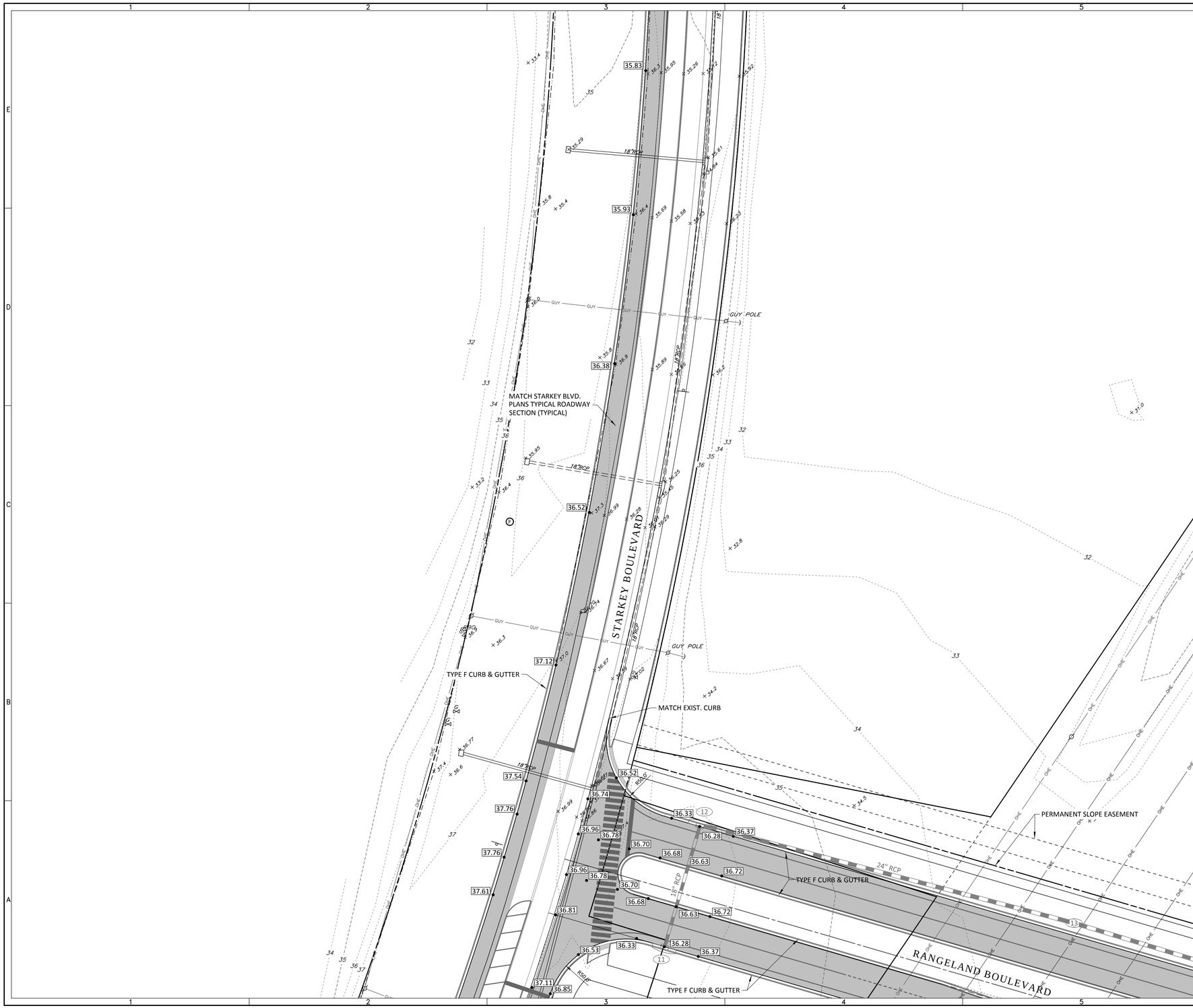

N

0 30 60

GRAPHIC SCALE: 1" = 30'

ELEVATIONS BASED ON:
NORTH AMERICAN VERTICAL DATUM 1988
CONVERSION:
NAVD 88 TO NGVD 29 = +0.85

GENERAL LEGEND

- WETLAND LINE
- WETLAND CONS. AREA SETBACK
- 12" Oak — EXISTING TREE TO BE REMOVED
- 12" Oak — EXISTING TREE TO BE PROTECTED
- PROPOSED TREE BARRICADE
- STAKED EROSION CONTROL
- FLOODPLAIN LIMITS
- C-810 — PLAN & PROFILE SHEET NUMBER

DRAINAGE LEGEND

EXISTING	PROPOSED	
		STORM DRAINAGE STRUCTURE & PIPE
10	10	STRUCTURE NO.
+15.0	15.00	SPOT ELEVATION GROUND
+15.00	15.00	SPOT ELEVATION PAVEMENT
	15.00 / 14.50	TOP OF CURB / SIDEWALK EDGE OF PAVEMENT
	15.00	PROFILE GRADE ELEVATION REFERENCE
15 — 15.0		CONTOUR
		DIRECTION OF SURFACE FLOW
UDCO	UDCO	UNDERDRAIN WITH CLEANOUT
		STAKED EROSION CONTROL

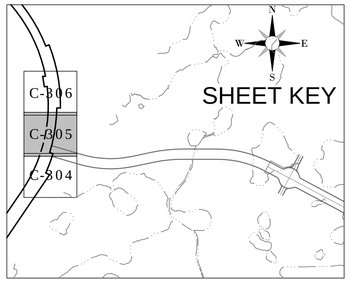

HEIDT DESIGN
Civil Engineering • Planning & GIS
Transportation Engineering
Ecological Services • Landscape Architecture
Engineering Business Certificate of Authorization No. 28782
Landscape Architecture Certificate of Authorization No. LC26000415
5806-B Breckenridge Pkwy.
Tampa, Florida 33610
Office: 813-253-5311
Fax: 813-464-7629
www.HeidtDesign.com

RANGELAND BOULEVARD WEST EXTENSION IMPROVEMENTS
INTERSECTION IMPROVEMENTS PLAN

PREPARED FOR: WS-TSR, LLC

DATE	DESCRIPTION

DATE	DESCRIPTION
12/30/2015	INITIAL REVIEW SUBMITTAL

PROJECT NO:	TSR SR 1072
FILE:	INT
DESIGN BY:	MOORE
DRAWN BY:	JONES

FLORIDA PROFESSIONAL ENGINEER

GARY D. MILLER
DATE:
REGISTRATION NO. 52717

C-305

R:\STARKEY RANCH\RANGELAND BLVD WEST EXT PHASE 2\ENGINEERING\INT DWG-C-305 2015\12\30 9:43 AM MARK JONES

© COPYRIGHT 2015, HEIDT DESIGN, LLC. ALL RIGHTS RESERVED. NO DOCUMENTATION INCLUDING BUT NOT LIMITED TO DRAWINGS OR EXHIBITS MAY BE COPIED, REPRODUCED, OR DISTRIBUTED UNLESS SPECIFIC WRITTEN PERMISSION HAS BEEN OBTAINED FROM HEIDT DESIGN, LLC. IN ADVANCE. CONSENT IS HEREBY GRANTED SPECIFICALLY TO GOVERNMENTAL AGENCIES TO REPRODUCE THIS DOCUMENTATION IN COMPLIANCE WITH F.S. CHAPTER 119.

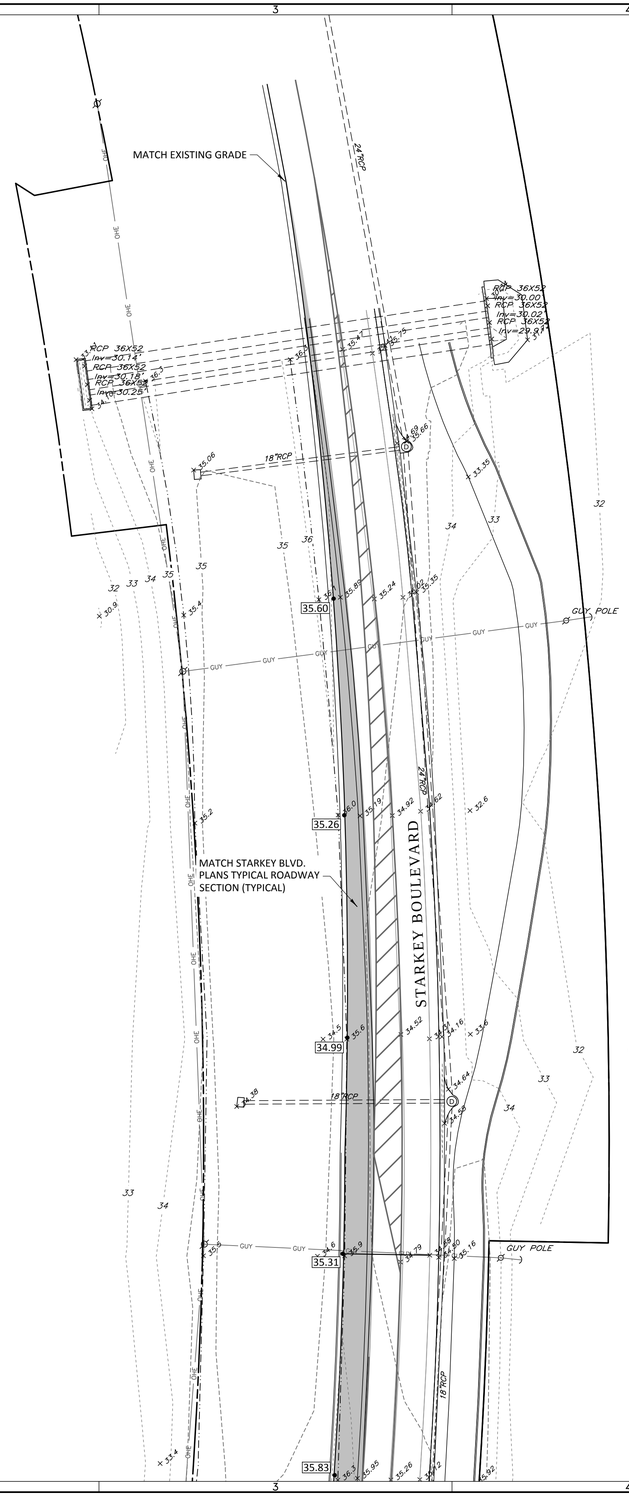

N

0 30 60

GRAPHIC SCALE: 1" = 30'

ELEVATIONS BASED ON:
NORTH AMERICAN VERTICAL DATUM 1988
CONVERSION:
NAVD 88 TO NGVD 29 = +0.85

GENERAL LEGEND

- WETLAND LINE
- WETLAND CONS. AREA SETBACK
- 12" Oak — EXISTING TREE TO BE REMOVED
- 12" Oak — EXISTING TREE TO BE PROTECTED
- PROPOSED TREE BARRICADE
- STAKED EROSION CONTROL
- FLOODPLAIN LIMITS
- C-810 — PLAN & PROFILE SHEET NUMBER

DRAINAGE LEGEND

EXISTING	PROPOSED	
		STORM DRAINAGE STRUCTURE & PIPE
10	10	STRUCTURE NO.
+15.0	15.00	SPOT ELEVATION GROUND
+15.00	15.00	SPOT ELEVATION PAVEMENT
	15.00 / 14.50	TOP OF CURB / SIDEWALK EDGE OF PAVEMENT
	15.00	PROFILE GRADE ELEVATION REFERENCE
15	15.0	CONTOUR
		DIRECTION OF SURFACE FLOW
UDCO	UDCO	UNDERDRAIN WITH CLEANOUT
		STAKED EROSION CONTROL

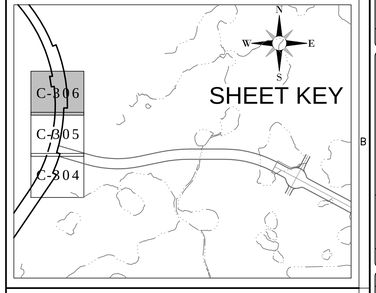

HEIDT DESIGN
Civil Engineering • Planning & GIS
Transportation Engineering
Ecological Services • Landscape Architecture
Engineering Business Certificate of Authorization No. 28782
Landscape Architecture Certificate of Authorization No. LC26000415
5806-B Breckenridge Pkwy.
Tampa, Florida 33610
Office: 813-253-5311
Fax: 813-464-7629
www.HeidtDesign.com

RANGELAND BOULEVARD WEST EXTENSION IMPROVEMENTS

INTERSECTION IMPROVEMENTS PLAN

PREPARED FOR: WS-TSR, LLC

DATE	DESCRIPTION

DATE	DESCRIPTION
12/30/2015	INITIAL REVIEW SUBMITTAL

PROJECT NO:	TSR SR 1072
FILE:	INT
DESIGN BY:	MOORE
DRAWN BY:	JONES

FLORIDA PROFESSIONAL ENGINEER

GARY D. MILLER
DATE:
REGISTRATION NO. 52717

C-306

R:\STARKEY RANCH\RANGELAND BLVD WEST EXT PHASE 2\ENGINEERING\INT DWG-C-306 2015\12\30 9:43 AM MARK JONES

© COPYRIGHT 2015, HEIDT DESIGN, LLC. ALL RIGHTS RESERVED. NO DOCUMENTS INCLUDING BUT NOT LIMITED TO DRAWINGS OR EXHIBITS MAY BE COPIED, REPRODUCED, OR DISTRIBUTED UNLESS SPECIFIC WRITTEN PERMISSION HAS BEEN OBTAINED FROM HEIDT DESIGN, LLC. IN ADVANCE. CONSENT IS HEREBY GRANTED SPECIFICALLY TO GOVERNMENTAL AGENCIES TO REPRODUCE THIS DOCUMENT FOR IN CONFORMANCE WITH F.S. CHAPTER 119.

SUMMARY OF DRAINAGE STRUCTURES

NUMBER	STRUCTURE TYPE	TOP ELEV.	LOCATION	SIDE	COMMENTS
1	FDOT TYPE 6 CURB INLET	36.43	47+20 - RANGELAND WEST CONSTRUCTION	RT.	
2	FDOT TYPE 6 CURB INLET	36.43	47+20 - RANGELAND WEST CONSTRUCTION	LT.	
3	TYPE P MANHOLE 4'-0" DIA.	37.31	45+93 - RANGELAND WEST CONSTRUCTION	LT.	
4	TYPE P MANHOLE 4'-0" DIA.	37.70	43+80 - RANGELAND WEST CONSTRUCTION	LT.	
5	FDOT TYPE 6 CURB INLET	36.78	42+23 - RANGELAND WEST CONSTRUCTION	RT.	
6	FDOT TYPE 6 CURB INLET	36.78	42+23 - RANGELAND WEST CONSTRUCTION	LT.	
7	MES 18" RCP	32.07	42+04 - RANGELAND WEST CONSTRUCTION	LT.	
8	FDOT TYPE 6 CURB INLET	36.78	35+82 - RANGELAND WEST CONSTRUCTION	RT.	
9	FDOT TYPE 6 CURB INLET	36.78	35+82 - RANGELAND WEST CONSTRUCTION	LT.	
10	TYPE P MANHOLE 4'-0" DIA.	37.44	33+86 - RANGELAND WEST CONSTRUCTION	LT.	
11	FDOT TYPE 6 CURB INLET	36.25	19+33 - RANGELAND WEST CONSTRUCTION	RT.	
12	FDOT TYPE 6 CURB INLET	36.25	19+33 - RANGELAND WEST CONSTRUCTION	LT.	
13	TYPE P MANHOLE 4'-0" DIA.	37.01	21+73 - RANGELAND WEST CONSTRUCTION	LT.	
14	FDOT TYPE 6 CURB INLET	36.19	24+23 - RANGELAND WEST CONSTRUCTION	RT.	
15	FDOT TYPE 6 CURB INLET	36.19	24+23 - RANGELAND WEST CONSTRUCTION	LT.	
16	TYPE P MANHOLE 4'-0" DIA.	37.47	27+16 - RANGELAND WEST CONSTRUCTION	LT.	
17	FDOT TYPE 6 CURB INLET	36.65	30+00 - RANGELAND WEST CONSTRUCTION	RT.	
18	FDOT TYPE 6 CURB INLET	36.65	30+00 - RANGELAND WEST CONSTRUCTION	LT.	
19	MES 18" RCP	30.93	29+60 - RANGELAND WEST CONSTRUCTION	LT.	
20	FDOT TYPE 5 CURB INLET	36.06	17+97 - RANGELAND WEST CONSTRUCTION	RT.	
21	FDOT TYPE 5 CURB INLET	36.43	18+29 - RANGELAND WEST CONSTRUCTION	RT.	
22	TYPE C GRATE INLET	35.15	18+80 - RANGELAND WEST CONSTRUCTION	RT.	
100	TYPE H GRATE INLET	34.40	31+59 - RANGELAND WEST CONSTRUCTION	LT.	
101	MES 36" RCP	33.83	31+36 - RANGELAND WEST CONSTRUCTION	LT.	
102	TYPE D GRATE INLET	35.29	43+91 - RANGELAND WEST CONSTRUCTION	LT.	
103	MES 30" RCP	34.79	43+71 - RANGELAND WEST CONSTRUCTION	LT.	

SUMMARY OF DRAINAGE PIPES

STR. START	STR. END	PIPE DIMENSION & MATERIAL	LENGTH	SLOPE	START INV.	END INV.	FALL IN FEET
1	2	18" RCP	81	0.25%	32.20	32.00	0.20
2	3	24" RCP	131	0.15%	31.50	31.30	0.20
3	4	24" RCP	220	0.18%	30.30	29.90	0.40
4	6	24" RCP	162	0.12%	29.90	29.70	0.20
5	6	18" RCP	78	0.26%	32.70	32.50	0.20
6	7	36" RCP	80	0.12%	28.20	28.10	0.10
8	9	18" RCP	81	0.25%	32.70	32.50	0.20
9	10	24" RCP	200	0.15%	30.20	29.90	0.30
10	18	30" RCP	385	0.31%	29.40	28.20	1.20
11	12	18" RCP	80	0.25%	32.20	32.00	0.20
12	13	24" RCP	241	0.12%	31.50	31.20	0.30
13	15	24" RCP	247	0.12%	31.10	30.80	0.30
14	15	18" RCP	81	0.25%	31.30	31.10	0.20
15	16	30" RCP	283	0.11%	30.10	29.80	0.30
16	18	30" RCP	275	0.07%	29.80	29.60	0.20
17	18	18" RCP	81	0.25%	32.60	32.40	0.20
18	19	36" RCP	85	0.12%	27.70	27.60	0.10
20	21	18" RCP	139	0.22%	32.50	32.20	0.30
21	CONNECT TO EXISTING STRUCTURE	18" RCP	9	1.10%	32.20	32.10	0.10
22	CONNECT TO EXISTING STRUCTURE	18" RCP	8	0.38%	32.90	32.87	0.03
100	101	36" RCP	108	0.46%	28.90	28.40	0.50
102	103	30" RCP	36	0.83%	30.40	30.10	0.30

NOTE:

- ALL INLET AND MANHOLE STRUCTURE BOTTOMS ARE SPECIFIED TYPE 'P' UNLESS OTHERWISE NOTED. REFER TO FDOT DESIGN STANDARDS INDEX #200 & #201.
- ALL MITERED END SECTIONS (MES) ARE SPECIFIED FDOT INDEX #272 UNLESS OTHERWISE NOTED.

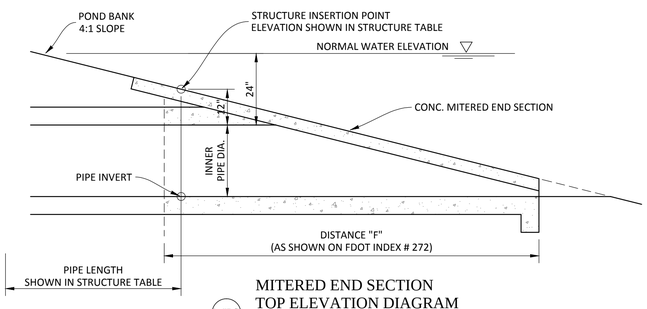

MES MITERED END SECTION TOP ELEVATION DIAGRAM

SCALE: NTS

ELEVATIONS BASED ON:
NORTH AMERICAN VERTICAL DATUM 1988
CONVERSION:
NAVD 88 TO NGVD 29 = +0.85

HEIDT DESIGN
Civil Engineering • Planning & GIS
Transportation Engineering
Ecological Services • Landscape Architecture
Engineering Business Certificate of Authorization No. 28782
Landscape Architecture Certificate of Authorization No. LC26000405
5806-B Breckenridge Pkwy.
Tampa, Florida 33610
Office: 813-253-5311
Fax: 813-464-7629
www.HeidtDesign.com

RANGELAND BOULEVARD
WEST EXTENSION PHASE 2

STORM STRUCTURE DATA

PREPARED FOR: WS-TSR, LLC

DATE	DESCRIPTION

DATE	DESCRIPTION
12/30/2015	INITIAL REVIEW SUBMITTAL
1	

PROJECT NO:	TSR SR 1072
FILE:	ST
DESIGN BY:	MOORE
DRAWN BY:	JONES

FLORIDA PROFESSIONAL ENGINEER

GARY D. MILLER
DATE:
REGISTRATION NO. 52717

C-307

P:\STARKEY RANCH\RANGELAND BLVD WEST EXT PHASE 2\ENGINEERING\ST DWG-C-307 20\5\12\30 9:43 AM MARK JONES

COPYRIGHT 2015, HEIDT DESIGN LLC - ALL RIGHTS RESERVED. NO DOCUMENTS MAY BE COPIED OR REPRODUCED, OR DISTRIBUTED UNLESS SPECIFIC WRITTEN PERMISSION HAS BEEN OBTAINED FROM HEIDT DESIGN, LLC IN ADVANCE. CONSENT IS HEREBY GRANTED SPECIFICALLY TO GOVERNMENTAL AGENCIES TO REPRODUCE THIS DOCUMENTATION IN COMPLIANCE WITH F.S. CHAPTER 119.

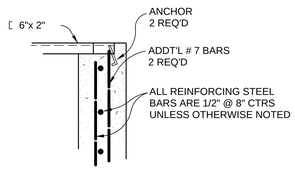

SECTION "X-X"

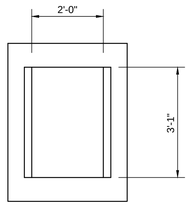

TYPE "C"

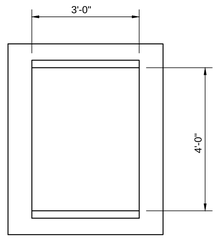

TYPE "D"

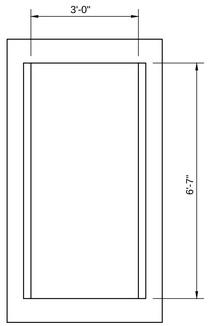

TYPE "H"

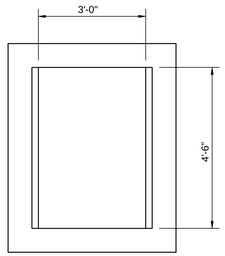

TYPE "E"

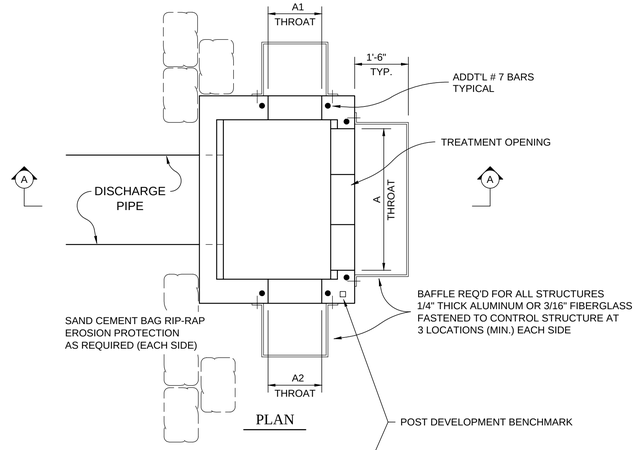

PLAN

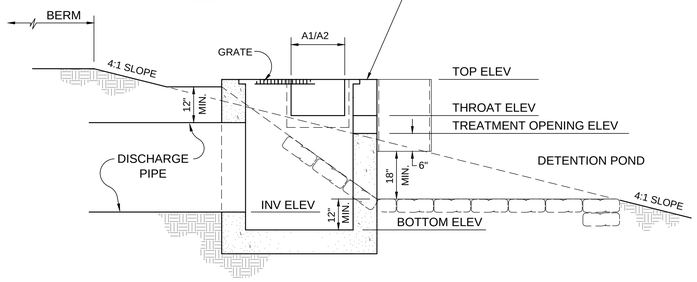

SECTION "A-A"
DETENTION POND

TYPICAL CONTROL STRUCTURE
MODIFIED

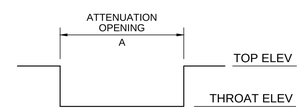

SECTION "A-A"

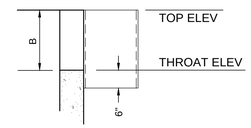

SECTION "B-B"

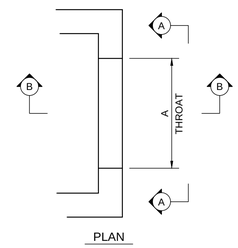

PLAN

TYPE "CS-1"
OPENING

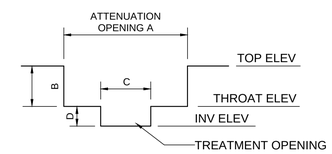

SECTION "D-D"

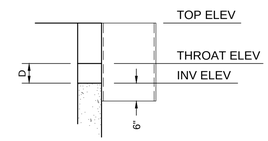

SECTION "E-E"

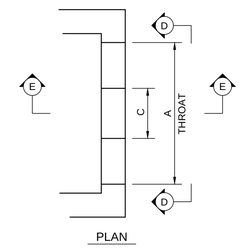

PLAN

TYPE "CS-4"
OPENING

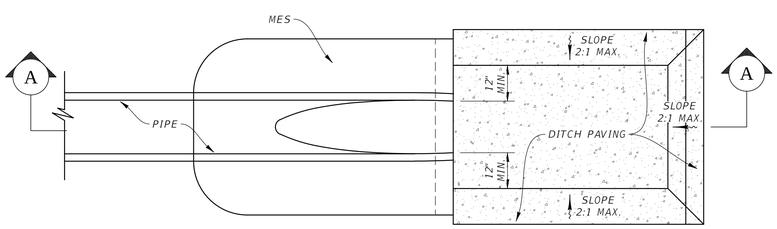

PLAN

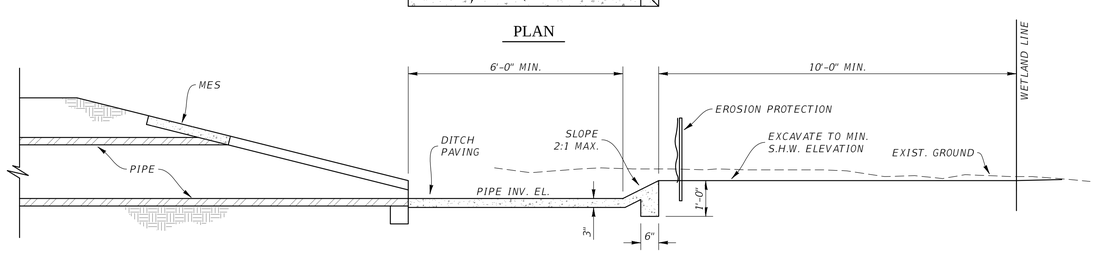

SECTION "A-A"

TYPICAL POND/OUTFALL SUMP DETAIL
DITCH PAVING

SCALE: NTS

CONTROL STRUCTURE DATA

STRUCTURE				DISCHARGE PIPE			ATTENUATION AND TREATMENT CONTROLS								
								ATTENUATION OPENING			TREATMENT OPENING				
STRNO.	FDOT BOX TYPE	TOP EL.	BOTTOM EL.	TYPE	SIZE (IN.)	INV. EL. (IN.)	STR. TYPE	A	B	ELEV. (FT.)	C	D	F°	ELEV. (FT.)	REMARKS
16-2	D	35.00	29.90	RCP	30	30.40	CS-4	3'-0"	2'-1"	32.92	0'-7"	0'-5"		32.50	POND 16-2 OUTFALL
17-3	H	34.40	28.40	RCP	24	28.90	CS-4	2'-0"	3'-0"	31.40	0'-8"	0'-5"		30.90	POND 17-3 OUTFALL

NOTE:
DRAWING NOT TO SCALE

NOTE:
CONTRACTOR SHALL SUBMIT SHOP DRAWINGS
TO ENGINEER FOR APPROVAL PRIOR TO
CONSTRUCTING CONTROL STRUCTURES

ELEVATIONS BASED ON:
NORTH AMERICAN VERTICAL DATUM 1988
CONVERSION:
NAVD 88 TO NGVD 29 = +0.85

HEIDT DESIGN
Civil Engineering • Planning & GIS
Transportation Engineering
Ecological Services • Landscape Architecture
Engineering Business Certificate of Authorization No. 28782
Landscape Architecture Certificate of Authorization No. LC26000405
5806-B Breckenridge Pkwy.
Tampa, Florida 33610
Office: 813-253-5311
Fax: 813-464-7629
www.HeidtDesign.com

RANGELAND BOULEVARD
WEST EXTENSION PHASE 2

CONTROL STRUCTURE DATA SHEET

PREPARED FOR: WS-TSR, LLC

DATE	DESCRIPTION
2 09/01/2017	SFR 18-9
1 00/00/2015	REVIEW SUBMITTAL

PROJECT NO: TSR SR 1072
FILE: CSTR
DESIGN BY: MOORE
DRAWN BY: JONES

FLORIDA PROFESSIONAL ENGINEER

GARY D. MILLER
DATE:
REGISTRATION NO. 52717

C-308

R:\STARKEY RANCH\RANGELAND BLVD WEST EXT PHASE 2\ENGINEERING\CSTR.DWG-C-308 2015/12/30 9:43 AM MARK JONES

© COPYRIGHT 2015, HEIDT DESIGN, LLC. ALL RIGHTS RESERVED. NO DOCUMENTATION INCLUDING BUT NOT LIMITED TO DRAWINGS OR EXHIBITS MAY BE REPRODUCED OR DISTRIBUTED WITHOUT THE EXPRESS WRITTEN PERMISSION OF HEIDT DESIGN, LLC. HOWEVER, THE OWNER OF THE PROPERTY IS HEREBY GRANTED SPECIFICALLY TO GOVERNMENTAL AGENCIES TO REPRODUCE THIS DOCUMENTATION IN COMPLIANCE WITH F.S. CHAPTER 119.

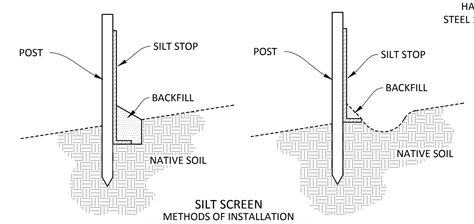

SILT SCREEN
METHODS OF INSTALLATION
N.T.S.

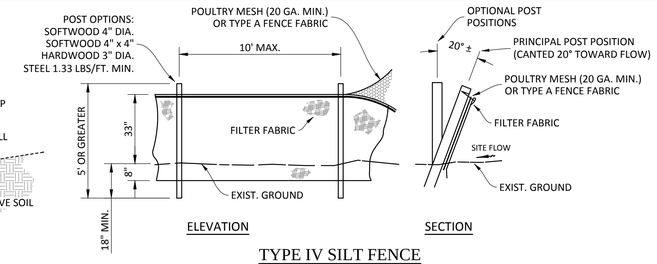

TYPE IV SILT FENCE
N.T.S.

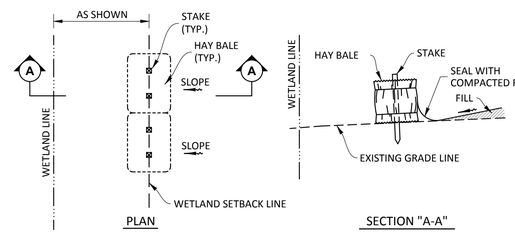

HAY BALE
N.T.S.

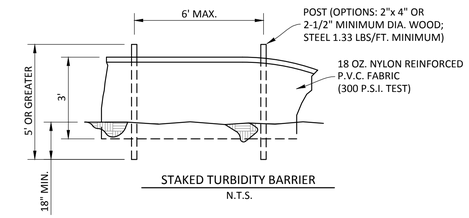

STAKED TURBIDITY BARRIER
N.T.S.

EROSION CONTROL DETAILS
EITHER METHOD OR A COMBINATION
OF BOTH IS ACCEPTABLE

NOTE:
THE EROSION BARRIERS, AS SHOWN, ARE NOT TO BE CONSTRUED TO MEAN THAT THEY ARE ALL THAT MAY BE REQUIRED. THE CONTRACTOR IS TO TAKE WHATEVER MEASURES NECESSARY TO CONTROL EROSION THROUGHOUT THE PROJECT.

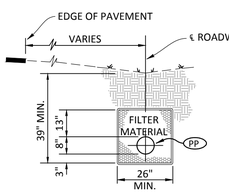

TRENCH SECTION
(W/O CURB)

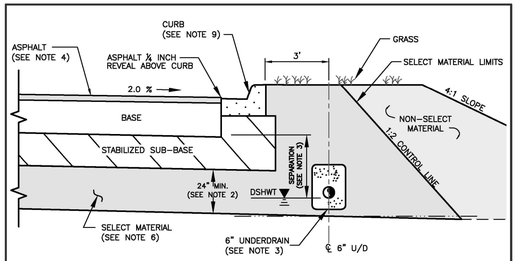

SECTIONAL VIEW
NTS

NOTES:

1. THE MINIMUM VERTICAL SEPARATION BETWEEN THE DESIGN SEASONAL HIGH WATER TABLE (DSHWT) AND THE BOTTOM OF THE BASE AT THE LOWEST EDGE OF PAVEMENT SHALL BE AS FOLLOWS:
   A. LIMEROCK BASE 24 INCH
   B. SOIL CEMENT BASE 12 INCH
   C. CRUSHED CONCRETE BASE (IF APPROVED) 12 INCH
   D. ASPHALT BASE COURSE (ABC) 12 INCH
2. A MINIMUM TWO (2) FEET OF SELECT MATERIAL CONSISTING OF A-1, A-3 OR A-2-4 WITH A MAXIMUM 15% PASSING THE #200 SIEVE BELOW THE STABILIZED SUB-BASE.
3. IF THE VERTICAL SEPARATION BETWEEN DSHWT AND BOTTOM OF BASE IS LESS THAN 2 FEET, UNDERDRAINS SHALL BE CONSTRUCTED ALONG BOTH SIDES OF THE ROAD. IF 2-3 FEET, UNDERDRAINS SHALL BE CONSTRUCTED ALONG ONE SIDE. THE INVERT OF A SIX (6) INCH UNDERDRAIN SHALL BE TWO (2) FEET MINIMUM BELOW THE BOTTOM OF THE BASE.
4. TYPE 2 THRU TYPE 5 ROADWAYS SHALL CONTAIN A MINIMUM OF 1.5 INCH OF SP ASPHALTIC CONCRETE. COLLECTOR ROADWAYS SHALL HAVE A MINIMUM OF THREE (3) INCHES OF SP ASPHALTIC CONCRETE. TYPE 1 ROADWAYS MAY BE COMPLETED IN STAGES, INITIALLY 2.25 INCHES OF SP 12.5 (S-1) ASPHALT COURSE WITH REQUIRED PAVEMENT MARKINGS AND 0.75 INCHES OF SP 9.5 (S-3) COURSE INSTALLED WITH ANY THERMOPLASTIC STRIPES, PRIOR TO RELEASE OF THE ASSURANCE FOR MAINTENANCE.
5. THE ROAD DESIGN DRAWINGS SHALL CONTAIN SOIL BORING LOCATIONS WITH EXISTING SOIL DATA, OBSERVED WATER LEVEL AND DSHWT SURFACE, UNDERDRAIN OUTFALL POND DATA AND PROXIMATE WETLAND HYDRO PERIOD ELEVATIONS SHALL ALSO BE IDENTIFIED.
6. SELECT MATERIAL SHALL BE PLACED PER FDOT INDEX DRAWINGS 500 & 505.
7. THE REQUIRED MINIMUM STRUCTURAL NUMBER (SN) SHALL BE:
   2.34 MIN. TYPE 2 ROADWAY
   3.50 MIN. TYPE I ROADWAYS
   3.70 MIN. COUNTY COLLECTOR
   4.00 MIN. COUNTY ARTERIAL
8. SOIL CEMENT BASE SHALL NOT BE CONSTRUCTED OVER STABILIZED SUBGRADE EXCEEDING LBR 20. THE COUNTY ASSIGNED LAYER COEFFICIENT FOR A MAXIMUM 12 INCH DEPTH, LBR 20 SHALL BE 0.04 PER INCH.
9. CURB DESIGN IS SITE SPECIFIC AND SHALL BE IDENTIFIED ON PLANS.

NOTE:
NO DEVIATIONS TO THIS DETAIL WILL BE PERMITTED UNLESS APPROVED BY THE COUNTY ENGINEER.
ANY PROPOSED ALTERATIONS SHALL BE CLEARLY IDENTIFIED AND HIGHLIGHTED ON DETAIL.

PASCO COUNTY ENGINEERING SERVICES	ROADWAY DESIGN CRITERIA		Sheet No. 1 of 1
DESIGN STANDARDS	APPROVED BY: JCW	BCC APPROVAL / REVISED	Index No. 100

Date/Time: 12/30/2015 9:43 AM
C:\Users\jones\AppDataLocal\Temp\AcPublish_6908\R-TSR-DD-C-371.dwg

HEIDT DESIGN
Civil Engineering • Planning & GIS
Transportation Engineering
Ecological Services • Landscape Architecture
Engineering Business Certificate of Authorization No. 28782
Landscape Architecture Certificate of Authorization No. LC26000405
5806-B Breckenridge Pkwy.
Tampa, Florida 33610
Office: 813-253-5311
Fax: 813-464-7629
www.HeidtDesign.com

RANGELAND BOULEVARD
WEST EXTENSION PHASE 2

DRAINAGE DETAILS

PREPARED FOR:
WS-TSR, LLC

	DATE	DESCRIPTION
1	12/30/2015	INITIAL REVIEW SUBMITTAL

PROJECT NO:	TSR SR 1072
FILE:	DD
DESIGN BY:	MOORE
DRAWN BY:	JONES

FLORIDA PROFESSIONAL ENGINEER

GARY D. MILLER
DATE:
REGISTRATION NO. 52717

C-371

R:\STARKEY RANCH\RANGELAND BLVD WEST EXT PHASE 2\ENGINEERING\DD\DWG\C-371 2015\12\30 9:43 AM MARK JONES

COPYRIGHT 2015, HEIDT DESIGN, LLC. ALL RIGHTS RESERVED. NO DOCUMENTATION (INCLUDING BUT NOT LIMITED TO DRAWINGS OR SHEETS) MAY BE REPRODUCED OR TRANSMITTED IN ANY FORM OR BY ANY MEANS WITHOUT PERMISSION OF HEIDT DESIGN, LLC. THIS DOCUMENT IS HEREBY GRANTED SPECIFICALLY TO GOVERNMENTAL AGENCIES TO REPRODUCE THIS DOCUMENTATION IN COMPLIANCE WITH F.S. CHAPTER 119.

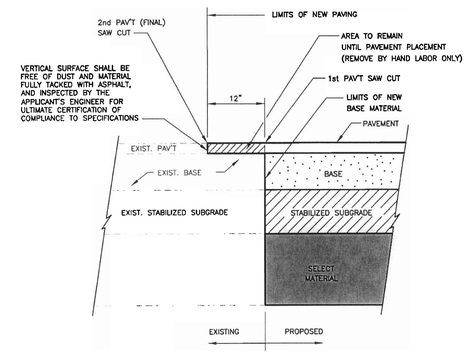

SECTIONAL VIEW
NTS

NOTES:

1. THE DEVELOPER'S ENGINEER SHALL INVESTIGATE THE EXISTING PAVEMENT LAYER TYPES AND DEPTHS BY RESEARCHING "RECORD/AS-BUILT DRAWINGS" AND/OR PERFORM GEOTECHNICAL BORINGS.
2. THE NEW PAVEMENT SHALL PROVIDE THE MINIMUM STRUCTURAL NUMBER AS FOLLOWS: TYPE 2 – 2.36, TYPE 1 – 3.50, COLLECTOR 3.70, ARTERIAL 4.00.

NOTE:
NO DEVIATIONS TO THIS DETAIL WILL BE PERMITTED UNLESS APPROVED BY THE COUNTY ENGINEER.
ANY PROPOSED ALTERATIONS SHALL BE CLEARLY IDENTIFIED AND HIGHLIGHTED ON DETAIL.

PASCO COUNTY ENGINEERING SERVICES
DESIGN STANDARDS

PAVEMENT TIE-IN SAW CUT DETAIL

APPROVED BY _____ BCC APPROVAL _____ REVISED _____ DWG. NO.

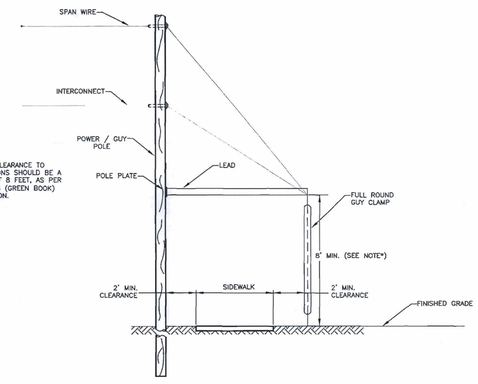

* NOTE:
VERTICAL CLEARANCE TO OBSTRUCTIONS SHOULD BE A MINIMUM OF 8 FEET, AS PER FDOT MUTCD (GREEN BOOK) 2007 EDITION.

SIDEWALK POWER POLE ANCHOR DETAIL
NTS

NOTE:
NO DEVIATIONS TO THIS DETAIL WILL BE PERMITTED UNLESS APPROVED BY THE COUNTY ENGINEER.
ANY PROPOSED ALTERATIONS SHALL BE CLEARLY IDENTIFIED AND HIGHLIGHTED ON DETAIL.

PASCO COUNTY ENGINEERING SERVICES
DESIGN STANDARDS

SIDEWALK POWER POLE ANCHOR DETAIL

APPROVED BY _____ BCC APPROVAL _____ REVISED _____ DWG. NO.

HEIDT DESIGN
Civil Engineering • Planning & GIS
Transportation Engineering
Ecological Services • Landscape Architecture
Engineering Business Certificate of Authorization No. 28782
Landscape Architecture Certificate of Authorization No. LC26000405
5806-B Breckenridge Pkwy.
Tampa, Florida 33610
Office: 813-253-5311
Fax: 813-464-7629
www.HeidtDesign.com

RANGELAND BOULEVARD
WEST EXTENSION PHASE 2

DRAINAGE DETAILS

PREPARED FOR: WS-TSR, LLC

DATE	DESCRIPTION

DATE	DESCRIPTION
1 12/30/2015	INITIAL REVIEW SUBMITTAL

PROJECT NO: TSR SR 1072
FILE: DD
DESIGN BY: MOORE
DRAWN BY: JONES

FLORIDA PROFESSIONAL ENGINEER

GARY D. MILLER
DATE:
REGISTRATION NO. 52717

C-372

R:\STARKEY RANCH\RANGELAND BLVD WEST EXT PHASE 2\ENGINEERING\DD.DWG-C-372 2015/12/30 9:43 AM MARK JONES

© COPYRIGHT 2015, HEIDT DESIGN, LLC. ALL RIGHTS RESERVED. NO DOCUMENTATION INCLUDING BUT NOT LIMITED TO DRAWINGS OR EXHIBITS MAY BE COPIED, REPRODUCED, OR DISTRIBUTED IN ANY FORM OR MANNER WITHOUT THE PRIOR WRITTEN CONSENT OF HEIDT DESIGN, LLC. IT IS HEREBY GRANTED SPECIFICALLY TO GOVERNMENTAL AGENCIES TO REPRODUCE THIS DOCUMENTATION IN COMPLIANCE WITH F.S. CHAPTER 119.

TOP SLAB REINFORCING STEEL DIAGRAM (ALTERNATE A)

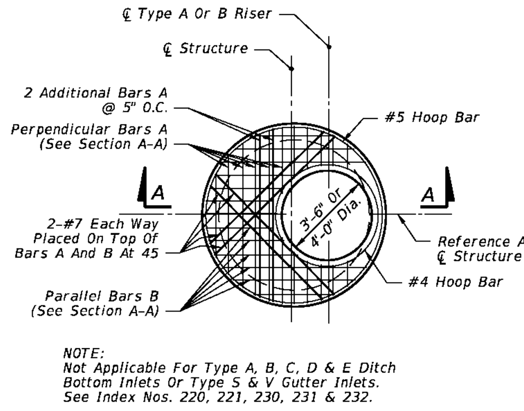

NOTE:
Not Applicable For Type A, B, C, D & E Ditch Bottom Inlets Or Type S & V Gutter Inlets.
See Index Nos. 220, 221, 230, 231 & 232.

TOP SLAB REINFORCING STEEL DIAGRAM
(ALTERNATE A)

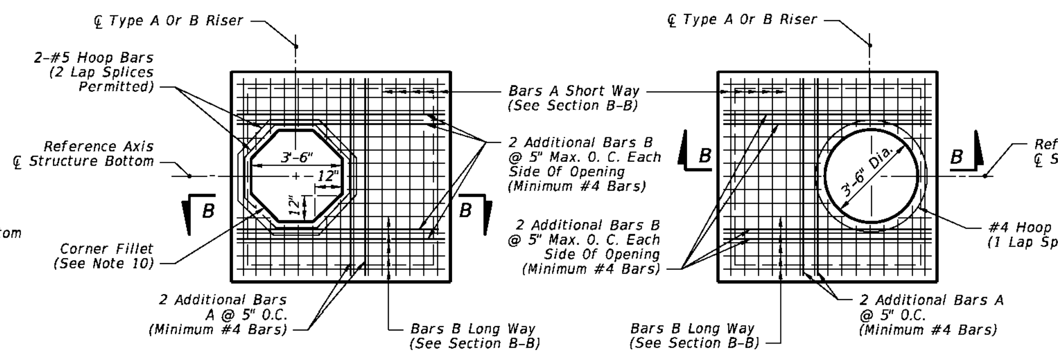

SQUARE OPENING WITH CORNER FILLETS

ROUND RISER OPENING

TOP SLAB REINFORCING STEEL DIAGRAM
(ALTERNATE B)

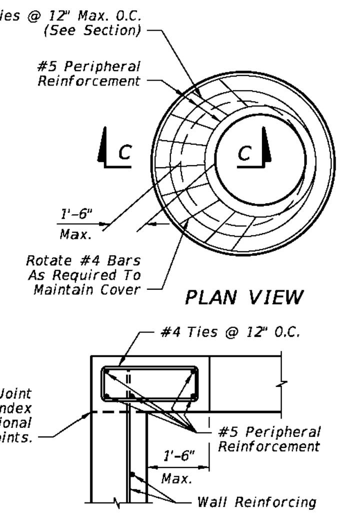

SECTION C-C
SPECIAL TOP SLAB*

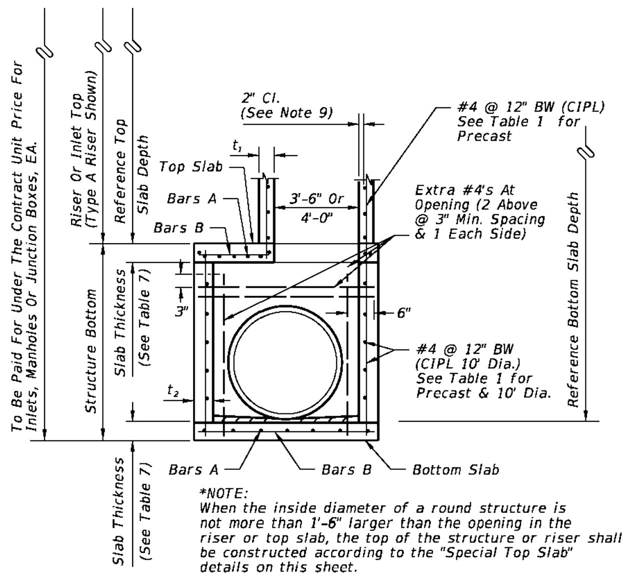

*NOTE:
When the inside diameter of a round structure is not more than 1'-6" larger than the opening in the riser or top slab, the top of the structure or riser shall be constructed according to the "Special Top Slab" details on this sheet.

SECTION A-A
(ALTERNATE A)

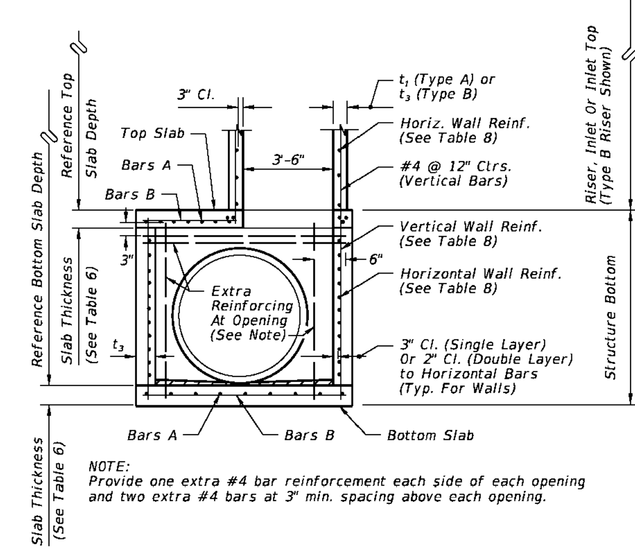

NOTE:
Provide one extra #4 bar reinforcement each side of each opening and two extra #4 bars at 3" min. spacing above each opening.

SECTION B-B
(ALTERNATE B)

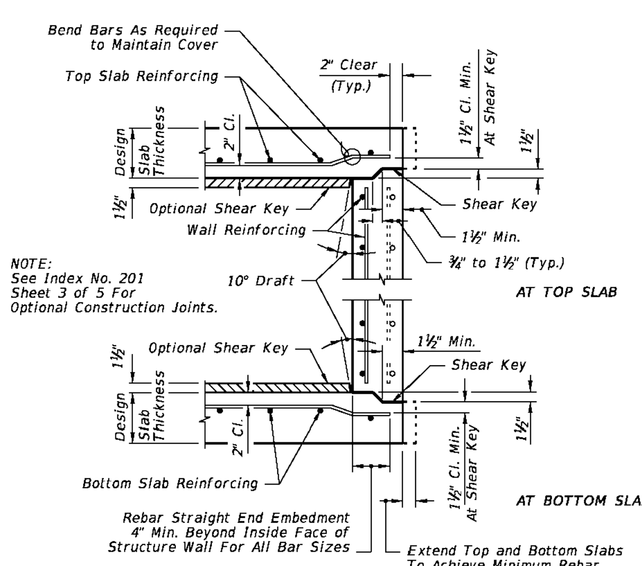

NOTE:
See Index No. 201 Sheet 3 of 5 For Optional Construction Joints.

TYPICAL SLAB TO WALL DETAILS
FOR PRECAST STRUCTURES

LAST REVISION 07/01/14	REVISION	DESCRIPTION:	FDOT 2015 DESIGN STANDARDS	STRUCTURE BOTTOMS TYPE J AND P	INDEX NO. 200	SHEET NO. 1 of 5

6/27/2014 5:44:35 AM

ROUND STRUCTURE BOTTOMS (ALTERNATE A) & ROUND RISERS- TABLE 1
Wall Thickness (t_1 & t_2) and Vertical & Horizontal Areas of Reinforcement (A_s)

Type	Structure/Riser Diameter (ft)	Cast-In-Place Items Class II Concrete t_1 Riser (in.)	t_2 Bottom (in.)	A_s (in.²/ft.)	Precast Items Class II Concrete t_1 Riser (in.)	t_2 Bottom (in.)	A_s (in.²/ft.)	ASTM C478 t_1 or t_2 (in.)	A_2 *** (in.²/ft.)
P	3'-6"	6	8	0.20	6	8	0.20	4**	0.105
P	4'-0"	6	8	0.20	6	8	0.20	5**	0.120
J	5'-0"	-	8	0.20	-	8	0.20	6**	0.150
J	6'-0"	-	8	0.20	-	8	0.20	6	0.180
J	7'-0"	-	8	0.20	-	8	0.20	7	0.210
J	8'-0"	-	8	0.20	-	8	0.20	8	0.240
J	10'-0"	-	10	0.40##	-	10	0.40##	10	0.300
J	12'-0"	-	10	0.40##	-	12	0.40##	12	0.360

TABLE 1 NOTES:
##Provide 0.20 eq. in.²/ft. at each face, 12" max. bar spacing.
**Modified minimum wall thickness.
***Min. total circumferential reinforcement for continuous steel hoops:
A_2 = 0.50 sq. in. for riser section height equal or less than 2'-0" (2 hoop min.)
A_2 = 0.75 sq. in. for riser section height more than 2'-0" up to 4'-0" (3 hoop min.)
Areas of reinforcing for precast items are based on Grade 60 reinforcing;
No reduction in the area of reinforcement is allowed for welded wire fabric in Table 1;
Area of vertical reinforcing may be reduced in accordance with ASTM C478.

SQUARE & RECTANGULAR STRUCTURES (ALTERNATE B) - TABLE 2

Type	Wall Length (ft)	Max. Depth (ft)	Wall Thickness (t_3) CIP (in.)	Precast (in.)
P	≤ 3'-6"	40	6 Riser 8 Bottom	6
J	4'-0"	40	8	6
J	5'-0"	22	-	6
J	6'-0"	15	-	6
J	5'-0" to 9'-0"	40	8	8
J	10'-0"	26	8	8
J	10'-0" to 12'-0"	40	10	9
J	16'-0"	35	-	9
J	16'-0"	40	10	10
J	20'-0"	25	-	9
J	20'-0"	30	10	10

TABLE 2 NOTES:
See Table 8 for Reinforcing Schedule.

GENERAL NOTES

1. Standard structure bottoms 4'-0" diameter and smaller (Alt. A) and 3'-6" square (Alt. B) are designated Type P. Larger standard structure bottoms are designated Type J. Risers are permitted for all structures. Round risers are designated Type A, square risers are designated Type B.
2. Walls of circular structures (Alt. A) constructed in place may be of brick or reinforced concrete. Precast and rectangular structures (Alt. B) shall be constructed of reinforced concrete only.
3. Wall thickness and reinforcement are for either reinforced cast-in-place or precast concrete units except that precast circular units may be furnished with walls in accordance with ASTM C478 (see modified wall thicknesses in Table 1).
4. Top and bottom slab thickness and reinforcement are for precast and cast-in-place construction. All concrete shall be of Class II concrete, except use Class IV concrete when shown in the Plans, for special applications of structures located in extremely aggressive environments. Concrete as specified in ASTM C478 (4000 psi) may be used in lieu of Class II concrete for precast items manufactured in accordance with Specifications Section 449.
5. All reinforcement shown is Grade 60 steel, deformed bar. Equivalent area Grade 40 steel or equivalent area smooth or deformed welded wire reinforcement in accordance with Specification Section 931 may be substituted according to Index No. 201, unless otherwise noted.
6. Alt. A or Alt. B structure bottoms may be used in conjunction with curb inlet tops Types 1, 2, 3, 4, 5, 6, 9, and 10, and any manhole or junction box unless otherwise shown in the plans or other standard drawings. Alt. B structure bottoms may be used in conjunction with curb inlet Types 7 & 8, or any ditch bottom inlet unless otherwise shown in the plans or other standard drawings.
7. Rectangular structures may be rotated as directed by the Engineer in order to facilitate connections between the structure walls and storm sewer pipes.
8. Except when ACI hooks are specifically required, reinforcement in top and bottom slab shall be straight embedment.
9. All reinforcement must have 2" minimum cover except for 3'-6" diameter precast circular units manufactured under ASTM C478, keyed construction otherwise shown. Additional bars used to restrain hole formers for precast structures with grouted pipe connections,may be left flush with the hole surface. Cut or bend reinforcement at pipe openings to maintain cover. Exposed ends of reinforcing at precast pipe openings and grouted joints must be removed to 1" below the concrete surface and sealed with a Type F epoxy in accordance with Specification Section 926. Horizontal steel in rectangular structures shall be lapped a minimum of 30 bar diameters or by standard hooks at corners.
10. The corner fillets shown are necessary for rectangular structures used with circular risers and inlet throats and when used on skew with rectangular risers, inlets and inlet throats. Fillets will be required in the top slab of the Alt. A structure bottoms when used with the Alt. B risers. Each fillet shall be reinforced with two #5 bars.
11. Inlet walls, throats, risers or manhole tops shall be secured to structures as shown on Index No. 201 (Sheet 3 of 5) Optional Construction Joints.
12. Structures with depths over 14' below the mean high water table are to be checked for flotation by the designer of the drainage project.
13. Units larger than specified standards may be substituted at the contractor's option when these units will not cause or increase the severity of utility conflicts. Such larger units shall be furnished at no additional cost to the Department. Larger Alt. A units cannot replace Alt. B units without approval of the Engineer. This note applies to this Index only.
14. For manhole and junction box tops, for frames and covers, and, for supplementary details and notes see Index No. 201.
15. Type J structure bottoms must have a minimum 6'-0" wall height when possible, for maintenance access.

LAST REVISION 07/01/13	REVISION	DESCRIPTION:	FDOT 2015 DESIGN STANDARDS	STRUCTURE BOTTOMS TYPE J AND P	INDEX NO. 200	SHEET NO. 2 of 5

6/27/2014 5:44:36 AM

TABLE 3-MINIMUM STRUCTURE SIZES FOR SINGLE PIPE CONNECTION PER SIDE

PIPE SIZE	RECTANGULAR Side Dimension (L) Single Pipe Per Side	Note Number	ROUND Diameter (D) Single Pipe or θ=180°	2 to 4 Pipes θ=90°
18"	3'-6"		3'-6"	4'-0"
24"	3'-6"		3'-6"	5'-0"
30"	3'-6"/4'-0"	2	4'-0"	6'-0"
36"	4'-0"/5'-0"	3	5'-0"	7'-0"
42"	5'-0"		6'-0"	7'-0"
48"	6'-0"		6'-0"	8'-0"
54"	6'-0"		7'-0"	10'-0"
60"	7'-0"		7'-0"	10'-0"
66"	7'-0"/8'-0"	4	8'-0"	12'-0"
72"	8'-0"		8'-0"	12'-0"
78"	9'-0"		10'-0"	12'-0"
84"	9'-0"		12'-0"	N/A

TABLE 3 NOTES:
1. For Round Structures sizes with variable angles between pipes and variable pipe sizes, refer to the FDOT Storm Drain Handbook.
2. For 3'-6" Precast Square Structure Bottoms, 30" Pipes with similar invert elevations are not permitted in adjacent walls. Use 4'-0" Side Dimensions when 30" pipe openings are required on adjacent walls and the difference in flow lines is less than 3'-0".
3. For 4'-0" Precast Square Structure Bottoms, 36" Pipes with similar invert elevations are not permitted in adjacent walls. Use 5'-0" Side Dimensions when 36" pipe openings are required on adjacent walls and the difference in flow lines is less than 3'-0".
4. For 7'-0" Precast Square Structure Bottoms, 66" Pipes with similar invert elevations are not permitted in adjacent walls. Use 8'-0" Side Dimensions when 66" pipe openings are required on adjacent walls and the difference in flow lines is less than 4'-0".

TABLE 4-MINIMUM SIZES FOR MULTIPLE PARALLEL PIPE CONNECTIONS FOR RECTANGULAR STRUCTURE BOTTOMS

PIPE SIZE	PIPE SPACING (S)	MINIMUM WALL LENGTH (L) FOR NUMBER OF PARALLEL PIPES 2	3	4
18"	2'-10"	6'-0"	8'-6"	11'-0"
24"	3'-5"	6'-6"	10'-0"	13'-6"
30"	4'-3"	8'-0"	12'-6"	16'-6"
36"	5'-1'	9'-6"	14'-6"	19'-6"
42"	6'-0"	11'-0"	17'-0"	-
48"	6'-9"	12'-6"	19'-0"	-
54"	7'-8"	14'-0"	-	-
60"	8'-6"	15'-0"	-	-
66"	9'-0"	16'-6"	-	-
72"	10'-0"	18'-0"	-	-
78"	10'-9"	19'-0"	-	-
84"	11'-8"	20'-6"	-	-

TABLE 4 NOTES:
1. Minimum wall lengths based on precast structures, using concrete pipe with maximum skew angles per Table 5.
2. Wall lengths exceeding 20'-0" require special designs.

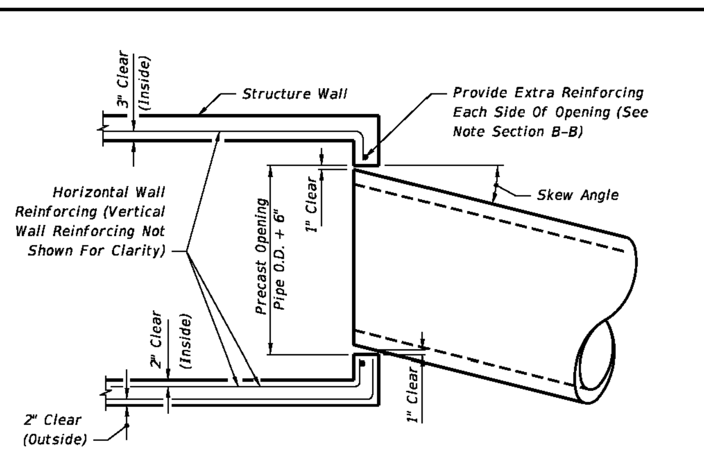

MAXIMUM PIPE SKEW FOR PRECAST ROUND OPENINGS
PLAN VIEW

TABLE 5 - MAXIMUM PIPE SKEW FOR PRECAST ROUND OPENINGS

	WALL THICKNESS	PIPE SIZE 18"	24"	30"	36"	42"	48"	54"	60"	66"	72"	78"	84"
MAXIMUM SKEW ANGLE	8"	19°	17°	16°	16°	15°	14°	14°	13°	13°	13°	12°	12°
	6"	21°	20°	18°	17°	17°	16°	15°	15°	14°	14°	13°	13°

TABLE 5 NOTES:
These values are based on 2" clearance for precast structures.
Larger skews are possible for Cast-In-Place Structures or elliptical pipe openings when approved by the Engineer.

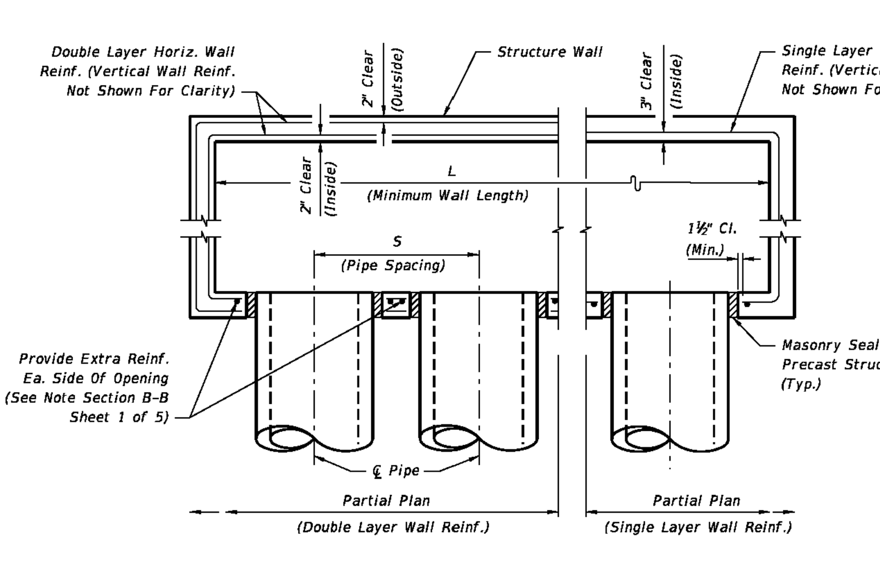

MULTIPLE PARALLEL PIPE CONNECTIONS DETAIL
PLAN VIEW

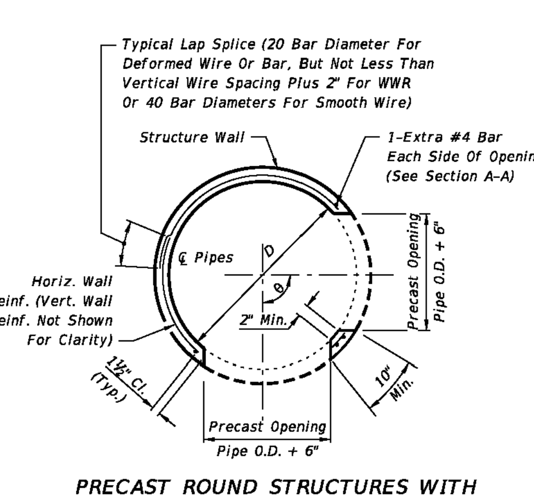

PRECAST ROUND STRUCTURES WITH
MULTIPLE PIPE CONNECTIONS

STRUCTURE SIZES FOR PIPE CONNECTIONS

LAST REVISION 07/01/07	REVISION	DESCRIPTION:	FDOT 2015 DESIGN STANDARDS	STRUCTURE BOTTOMS TYPE J AND P	INDEX NO. 200	SHEET NO. 3 of 5

6/27/2014 5:44:36 AM

SLAB DESIGNS - SQUARE AND RECTANGULAR STRUCTURES (TABLE 6)
(ALL SLABS 8" THICK EXCEPT AS NOTED - REINFORCING PARALLEL TO SHORT WAY AND LONG WAY)

SHORT-WAY SLAB DEPTH	SCHEDULE (Bars A)	LONG-WAY SLAB DEPTH	SCHEDULE (Bars B)
SIZE: 3'-6" x UNLIMITED			
≥0.5' < 8'	B10	≥0.5' < 24'	B10
8' < 13'	B5.5	24'-40'	B5.5
13' < 31'	C6.5		
31'-40'	D7		
SIZE: 4' x UNLIMITED			
≥0.5' < 7'	B5.5	≥0.5' < 15'	B10
7' < 19'	C6.5	15' < 29'	B5.5
19' < 31'	D7	29'-40'	C6.5
31'-40'	E5		
SIZE: 5' x 5'			
≥0.5' < 3'	C6.5	≥0.5' < 3'	C6.5
3' < 7'	B5.5	3' < 13'	C6.5
7' < 22'	C6.5	13' < 22'	D7
22' < 29'	D7	22' < 29'	D4.5
29'-40'	E5	29'-40'	E5
SIZE: 5' x 6'			
≥0.5' < 12'	C6.5	≥0.5' < 3'	C6.5
12' < 26'	D7	3' < 9'	B5.5
26'-40'	E5	9' < 23'	C3.5
		23' < 35'	D4.5
		35'-40'	E5
SIZE: 5' x 7'			
≥0.5' < 10'	C6.5	≥0.5' < 10'	B5.5
10' < 20'	D7	10' < 31'	C3.5
20' < 34'	E5	31'-40'	D4.5
34'-40'	F5		
SIZE: 5' x 8'			
≥0.5' < 7'	C6.5	≥0.5' < 8'	B10
7' < 13'	D7	8' < 17'	B5.5
13' < 24'	E5	17' < 25'	C6.5
24'-40'	F5	25'-40'	C3.5
SIZE: 5' x 9'			
≥0.5' < 8'	C6.5	≥0.5' < 14'	B10
8' < 14'	D7	14' < 24'	B5.5
14' < 25'	E5	24' < 34'	C6.5
25'-40'	F5	34'-40'	C3.5
SIZE: 5' x UNLIMITED			
≥0.5' < 8'	C6.5	≥0.5' < 14'	B10
8' < 14'	D7	14' < 24'	B5.5
14' < 25'	E5	24' < 34'	C6.5
25'-40'	F5	34'-40'	C3.5

SHORT-WAY SLAB DEPTH	SCHEDULE (Bars A)	LONG-WAY SLAB DEPTH	SCHEDULE (Bars B)
SIZE: 6' x 6'			
≥0.5' < 13'	C6.5	≥0.5' < 10'	C3.5
13' < 23'	D7	10' < 18'	D4.5
23'-40'	E5	18' < 27'	E5
		27' < 33'	E3
		33'-40'	F5
SIZE: 6' x 7'			
≥0.5' < 8'	C6.5	≥0.5' < 8'	C6.5
8' < 16'	D7	8' < 12'	C3.5
16' < 28'	E5	12' < 21'	D4.5
28'-40'	F5	21' < 28'	E5
		28' < 35'	E3
		35'-40'	F5
SIZE: 6' x 8'			
≥0.5' < 6'	C6.5	≥0.5' < 6'	B5.5
6' < 13'	D7	6' < 11'	C6.5
13' < 22'	E5	11' < 17'	C3.5
22' < 35'	F5	17' < 22'	D4.5
35'-40'	G5	22' < 32'	E5
		32'-40'	E3
SIZE: 6' x 9'			
≥0.5' < 8'	D7	≥0.5' < 8'	B5.5
8' < 14'	E5	8' < 14'	C6.5
14' < 24'	F5	14' < 21'	C3.5
24'-34'	G5	21' < 25'	D4.5
		25'-34'	E5
SIZE: 6' x UNLIMITED			
≥0.5' < 8'	D7	≥0.5' < 8'	B5.5
8' < 14'	E5	8' < 14'	C6.5
14' < 24'	F5	14' < 21'	C3.5
24'-34'	G5	21' < 25'	D4.5
		25'-34'	E5
SIZE: 7' x 7'			
≥0.5' < 8'	C6.5	≥0.5' < 4'	C6.5
8' < 15'	D7	4' < 7'	C3.5
15' < 26'	E5	7' < 11'	D4.5
26'-40'	F5	11' < 22'	E3
		22' < 32'	F3.5
		32'-40'	G3.5
SIZE: 7' x 8'			
≥0.5' < 5'	C6.5	≥0.5' < 5'	C6.5
5' < 11'	D7	5' < 8'	C3.5
11' < 19'	E5	8' < 13'	D4.5
19' < 30'	F5	13' < 22'	E3
30'-40'	G5	22' < 30'	F3.5
		30'-40'	G3.5
SIZE: 7' x 9'			
≥0.5' < 9'	D7	≥0.5' < 7'	C6.5
9' < 15'	E5	7' < 10'	C3.5
15' < 25'	F5	10' < 14'	D4.5
25' - 34'	G5	14' < 21'	E5
		21' < 29'	F5
		29'-34'	F3.5

SHORT-WAY SLAB DEPTH	SCHEDULE (Bars A)	LONG-WAY SLAB DEPTH	SCHEDULE (Bars B)
SIZE: 8' x 8'			
≥0.5' < 10'	D7	≥0.5' < 9'	D4.5
10' < 19'	E5	9' < 13'	E5
19'-30'	F5	13' < 18'	F5
		18' < 23'	F3.5
		23'-30'	G3.5
SIZE: 8' x 9'			
≥0.5' < 8'	D7	≥0.5' < 7'	D7
8' < 14'	E5	7' < 9'	D4.5
14' < 23'	F5	9' < 15'	E3
23'-31'	G3.5	15' < 20'	F5
		20' < 23'	F3.5
		23'-31'	G3.5
SIZE: 9' x 9'			
≥0.5' < 8'	D7	≥0.5' < 7'	D4
8' < 14'	E5	7' < 10'	E5
14' < 22'	F5	10' < 17'	F3.5
		17' < 22'	G3.5
SIZE: 9'x9'x10" SLAB THICKNESS			
22' < 36'	F5	22' < 31'	F3.5
36'-40'	G5	31'-40'	G3.5
SIZE: 10'x10'x10" SLAB THICKNESS			
≥0.5' < 7'	C6.5	0.5' < 6'	C6.5
7' < 10'	D7	6' < 9'	D4.5
10' < 18'	E5	9' < 15'	E5
18' < 27'	F5	15' < 22'	F5
27'-32'	G5	22'-32'	G3.5
SIZE: 12'x12'x12" SLAB THICKNESS			
≥0.5' < 10'	D7	≥0.5' < 8'	D7
10' < 16'	E5	8' < 14'	E5
16' < 25'	F5	14' < 22'	F5
25'-35'	G5	22' < 30'	G5
		30'-35'	H4

SLAB DESIGNS - ROUND STRUCTURES (TABLE 7)

SLAB DEPTH	SLAB THICKNESS	REINF. (2-WAY) SCHEDULE
SIZE: 3'-6" DIAMETER		
2'-15'	6" Precast	C6.5
0.5' < 30'	8"	A6
30'-40'	8"	B5.5
SIZE: 4'-0" DIAMETER		
≥0.5' < 19'	8"	A6
19' < 30'	8"	B5.5
30'-40'	8"	C6.5
SIZE: 5'-0" DIAMETER		
≥0.5' < 15'	8"	B5.5
15' < 26'	8"	C6.5
26' < 35'	8"	D7
35'-40'	8"	D4.5
SIZE: 6'-0" DIAMETER		
≥0.5' < 9'	8"	B5.5
9' < 15'	8"	C6.5
15' < 22'	8"	C3.5
22' < 30'	8"	D4.5
30'-40'	8"	E5
SIZE: 7'-0" DIAMETER		
≥0.5' < 8'	8"	C3.5
8' < 16'	8"	D4.5
16' < 23'	8"	E5
23' < 27'	8"	E3
27'-40'	8"	F3.5
SIZE: 8'-0" DIAMETER		
≥0.5' < 10'	8"	D4.5
10' < 16'	8"	E5
16' < 19'	8"	E3
19' < 29'	8"	F3.5
29'-40'	10"	F5
SIZE: 10'-0" DIAMETER		
≥0.5' < 12'	10"	D4.5
12' < 20'	10"	E5
20' < 28'	10"	F5
28'-40'	10"	G3.5
SIZE: 12'-0" DIAMETER		
≥0.5' < 8'	10"	D4.5
8' < 13'	10"	E5
13' < 18'	10"	F5
18' < 26'	10"	G3.5
26'-40'	12"	G3.5

SLAB AND WALL DESIGN TABLE NOTES

1. Size is the inside dimension(s) of a structure.
2. Slab reinforcement is appropriate for top, intermediate, and bottom slabs.
3. Bottom Slabs for precast 3'-6" x 3'-6" rectangular structures at 15' depth or less, may be 6" thick.
4. Slab depth is measured from finished grade to top of slab.
5. Wall depth is measured to the top of the bottom slab for boxes and to the top of the intermediate slab for risers.
6. Wall height is the distance between top of lower slab to bottom of upper slab. Maximum wall height is 12' for wall lengths exceeding 5', or 10' for wall lengths exceeding 12'.
7. Wall lengths exceeding 6'-0" require two layers of reinforcing (See Table 8) with 2" of cover from the horizontal bars to the inside and outside faces for each layer.
8. Wall lengths exceeding the dimensions or depths shown in Table 8, or 12'-0" diameter require a special design.
9. Wall thickness and reinforcing for rectangular structures is the same for both long and short sides.
10. Reinforcing schedules with larger areas of steel may be substituted for schedules with smaller bar or wire spacing, except that Schedule B10 may not be substituted for Schedule A6. See Index 201, Sheet 4 for allowable bar spacing adjustments when larger areas of reinforcing are substituted.

LAST REVISION 07/01/09	REVISION	DESCRIPTION:	FDOT 2015 DESIGN STANDARDS	STRUCTURE BOTTOMS TYPE J AND P	INDEX NO. 200	SHEET NO. 4 of 5

6/27/2014 5:44:37 AM

HEIDT DESIGN
Civil Engineering • Planning & GIS
Transportation Engineering
Ecological Services • Landscape Architecture
Engineering Business Certificate of Authorization No. 28782
Landscape Architecture Certificate of Authorization No. LC26000405
5806-B Breckenridge Pkwy.
Tampa, Florida 33610
Office: 813-253-5311
Fax: 813-464-7629
www.HeidtDesign.com

RANGELAND BOULEVARD
WEST EXTENSION PHASE 2

DRAINAGE DETAILS

PREPARED FOR: WS-TSR, LLC

No.	DATE	DESCRIPTION
1	12/30/2015	INITIAL REVIEW SUBMITTAL

PROJECT NO: TSR SR 1072
FILE: DD
DESIGN BY: MOORE
DRAWN BY: JONES

FLORIDA PROFESSIONAL ENGINEER
GARY D. MILLER
DATE:
REGISTRATION NO. 52717

C-373

R:\STARKEY RANCH\RANGELAND BLVD WEST EXT PHASE 2\ENGINEERING\DD.DWG-C-373 2015/12/30 9:43 AM MARK JONES

© COPYRIGHT 2015, HEIDT DESIGN, LLC. ALL RIGHTS RESERVED. NO DOCUMENTATION (INCLUDING BUT NOT LIMITED TO DRAWINGS OR EXHIBITS) MAY BE COPIED, REPRODUCED, OR DISTRIBUTED UNLESS SPECIFIC WRITTEN PERMISSION HAS BEEN OBTAINED FROM HEIDT DESIGN, LLC. IN ADVANCE. CONSENT IS HEREBY GRANTED SPECIFICALLY TO GOVERNMENTAL AGENCIES TO REPRODUCE THIS DOCUMENTATION IN COMPLIANCE WITH F.S. CHAPTER 119.

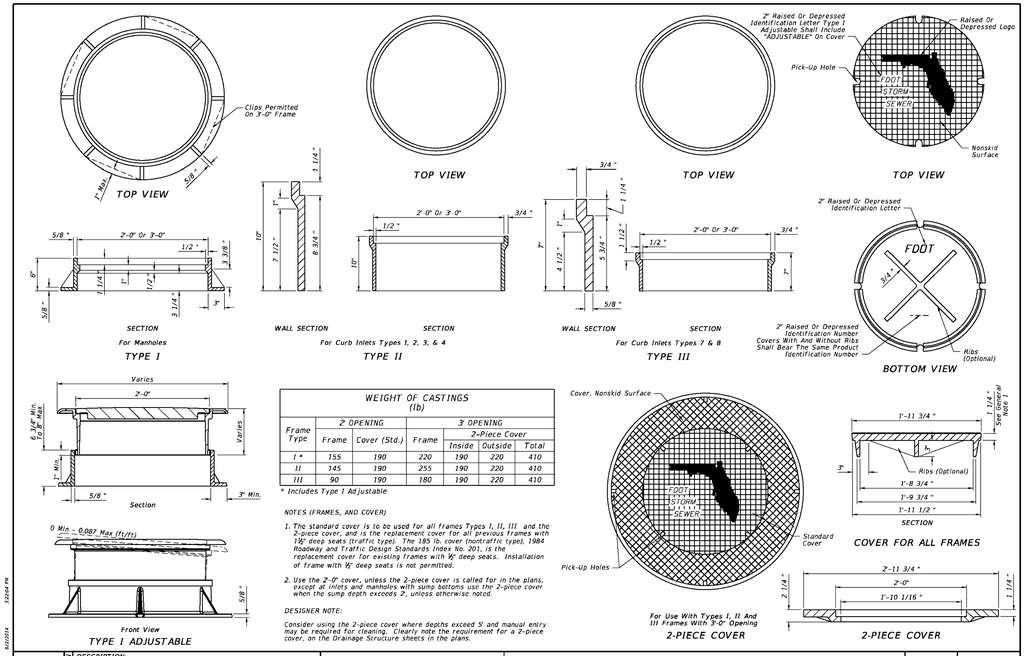

WEIGHT OF CASTINGS (lb)						
Frame Type	2' OPENING		3' OPENING			
	Frame	Cover (Std.)	Frame	2-Piece Cover		
				Inside	Outside	Total
I *	155	190	220	190	220	410
II	145	190	255	190	220	410
III	90	190	180	190	220	410

* Includes Type I Adjustable

NOTES (FRAMES, AND COVER)

1. The standard cover is to be used for all frames Types I, II, III and the 2-piece cover, and is the replacement cover for all previous frames with 1½" deep seats (traffic type). The 185 lb. cover (nontraffic type), 1984 Roadway and Traffic Design Standards Index No. 201, is the replacement cover for existing frames with ½" deep seats. Installation of frame with ½" deep seats is not permitted.
2. Use the 2'-0" cover, unless the 2-piece cover is called for in the plans, except at inlets and manholes with sump bottoms use the 2-piece cover when the sump depth exceeds 2', unless otherwise noted.

DESIGNER NOTE:

Consider using the 2-piece cover where depths exceed 5' and manual entry may be required for cleaning. Clearly note the requirement for a 2-piece cover, on the Drainage Structure sheets in the plans.

LAST REVISION	REVISION	DESCRIPTION:	FDOT 2015 DESIGN STANDARDS	SUPPLEMENTARY DETAILS FOR MANHOLES & INLETS	INDEX NO.	SHEET NO.
01/01/12					201	1 of 5

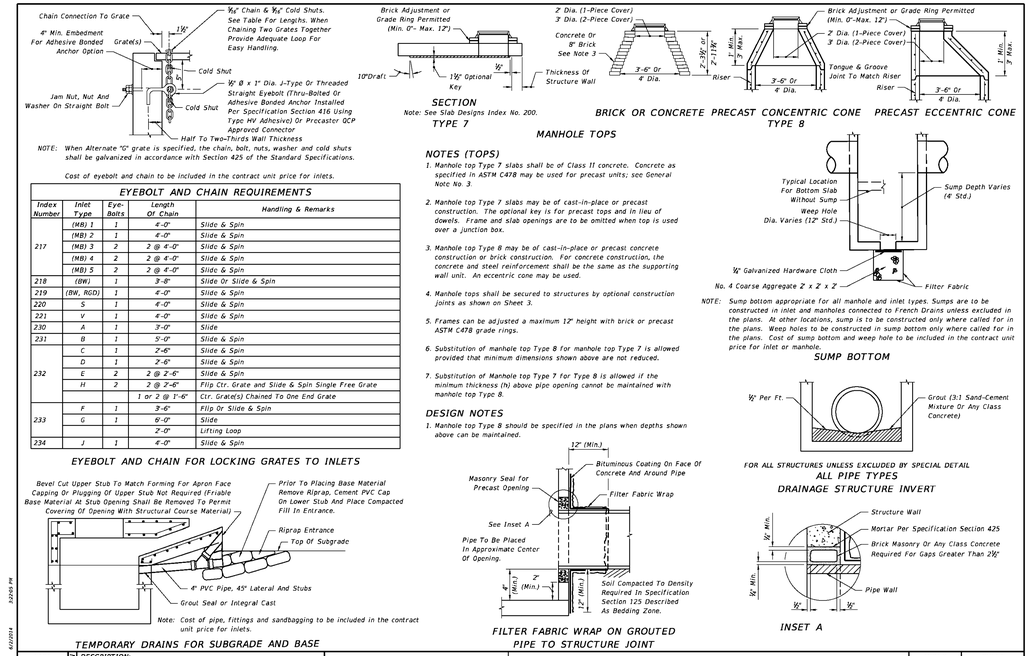

NOTES (TOPS)

1. Manhole top Type 7 slabs shall be of Class II concrete. Concrete as specified in ASTM C478 may be used for precast units; see General Note No. 3.
2. Manhole top Type 7 slabs may be of cast-in-place or precast construction. The optional key is for precast tops and in lieu of dowels. Frame and slab openings are to be omitted when top is used over a junction box.
3. Manhole top Type 8 may be of cast-in-place or precast concrete construction or brick construction. For concrete construction, the concrete and steel reinforcement shall be the same as the supporting wall unit. An eccentric cone may be used.
4. Manhole tops shall be secured to structures by optional construction joints as shown on Sheet 3.
5. Frames can be adjusted a maximum 12" height with brick or precast ASTM C478 grade rings.
6. Substitution of manhole top Type 8 for manhole top Type 7 is allowed provided that minimum dimensions shown above are not reduced.
7. Substitution of Manhole top Type 7 for Type 8 is allowed if the minimum thickness (h) above pipe opening cannot be maintained with manhole top Type 8.

DESIGN NOTES

1. Manhole top Type 8 should be specified in the plans when depths shown above can be maintained.

EYEBOLT AND CHAIN REQUIREMENTS				
Index Number	Inlet Type	Eye-Bolts	Length Of Chain	Handling & Remarks
217	(MB) 1	1	4'-0"	Slide & Spin
	(MB) 2	1	4'-0"	Slide & Spin
	(MB) 3	2	2 @ 4'-0"	Slide & Spin
	(MB) 4	2	2 @ 4'-0"	Slide & Spin
	(MB) 5	2	2 @ 4'-0"	Slide & Spin
218	(BW)	1	3'-8"	Slide Or Slide & Spin
219	(BW, RGD)	1	4'-0"	Slide & Spin
220	S	1	4'-0"	Slide & Spin
221	V	1	4'-0"	Slide & Spin
230	A	1	3'-0"	Slide
231	B	1	5'-0"	Slide & Spin
232	C	1	2'-6"	Slide & Spin
	D	1	2'-6"	Slide & Spin
	E	2	2 @ 2'-6"	Slide & Spin
	H	2	2 @ 2'-6"	Flip Ctr. Grate and Slide & Spin Single Free Grate
			1 or 2 @ 1'-6"	Ctr. Grate(s) Chained To One End Grate
233	F	1	3'-6"	Flip Or Slide & Spin
	G	1	6'-0"	Slide
			2'-0"	Lifting Loop
234	I	1	4'-0"	Slide & Spin

EYEBOLT AND CHAIN FOR LOCKING GRATES TO INLETS

LAST REVISION	REVISION	DESCRIPTION:	FDOT 2015 DESIGN STANDARDS	SUPPLEMENTARY DETAILS FOR MANHOLES & INLETS	INDEX NO.	SHEET NO.
07/01/12					201	2 of 5

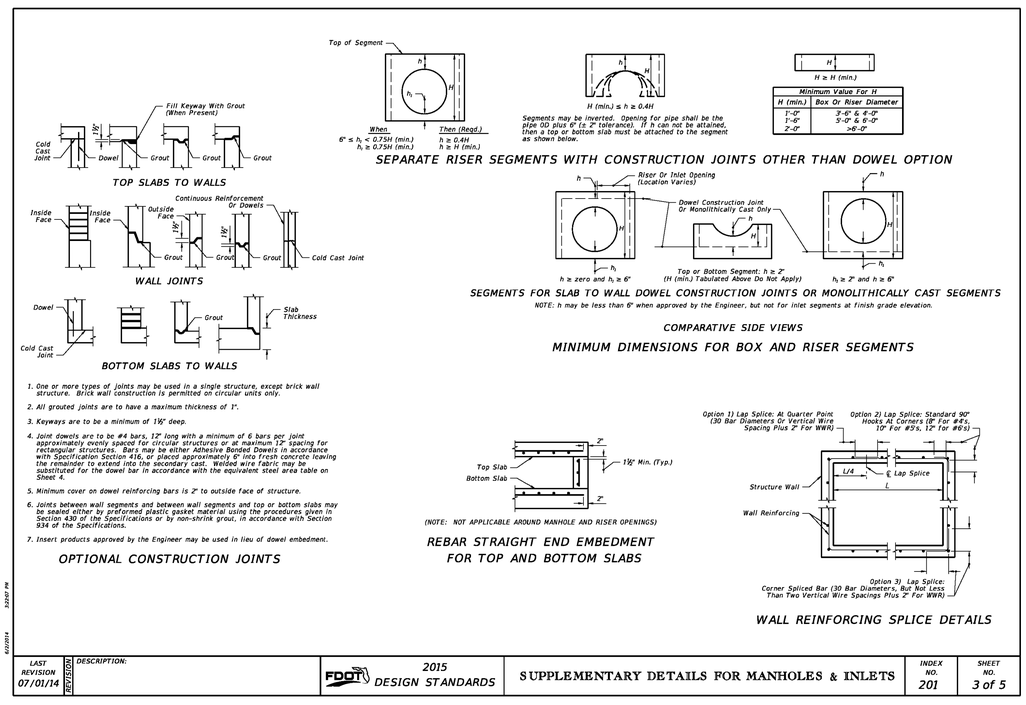

LAST REVISION	REVISION	DESCRIPTION:	FDOT 2015 DESIGN STANDARDS	SUPPLEMENTARY DETAILS FOR MANHOLES & INLETS	INDEX NO.	SHEET NO.
07/01/14					201	3 of 5

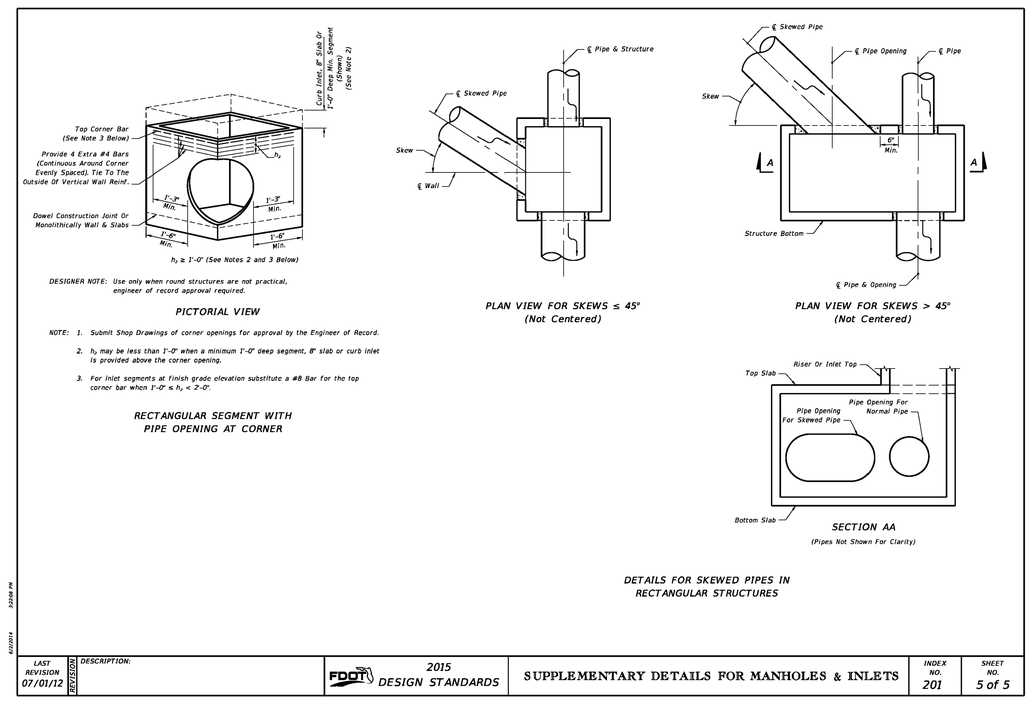

LAST REVISION	REVISION	DESCRIPTION:	FDOT 2015 DESIGN STANDARDS	SUPPLEMENTARY DETAILS FOR MANHOLES & INLETS	INDEX NO.	SHEET NO.
07/01/12					201	5 of 5

HEIDT DESIGN
Civil Engineering • Planning & GIS
Transportation Engineering
Ecological Services • Landscape Architecture
Engineering Business Certificate of Authorization No. 28762
Landscape Architecture Certificate of Authorization No. LC26000405
5806-B Breckenridge Pkwy.
Tampa, Florida 33610
Office: 813-253-5311
Fax: 813-464-7629
www.HeidtDesign.com

RANGELAND BOULEVARD
WEST EXTENSION PHASE 2

DRAINAGE DETAILS

WS-TSR, LLC

PREPARED FOR:

DATE	DESCRIPTION
12/30/2015	INITIAL REVIEW SUBMITTAL

PROJECT NO:	TSR SR 1072
FILE:	DD
DESIGN BY:	MOORE
DRAWN BY:	JONES

FLORIDA PROFESSIONAL ENGINEER

GARY D. MILLER
DATE:
REGISTRATION NO. 52717

C-374

R:\STARKEY RANCH\RANGELAND BLVD WEST EXT PHASE 2\ENGINEERING\DD\DWG\C-374 2015\12\30 9:43 AM MARK JONES

© COPYRIGHT 2015, HEIDT DESIGN, LLC. ALL RIGHTS RESERVED. NO DOCUMENTATION (INCLUDING BUT NOT LIMITED TO DRAWINGS OR EXHIBITS) MAY BE DISTRIBUTED OR REPRODUCED IN ANY FORM WITHOUT THE PERMISSION OF HEIDT DESIGN, LLC. HOWEVER, THE OWNER OF THIS DOCUMENT IS HEREBY GRANTED SPECIFICALLY TO GOVERNMENTAL AGENCIES TO REPRODUCE THIS DOCUMENTATION IN COMPLIANCE WITH F.S. CHAPTER 119.

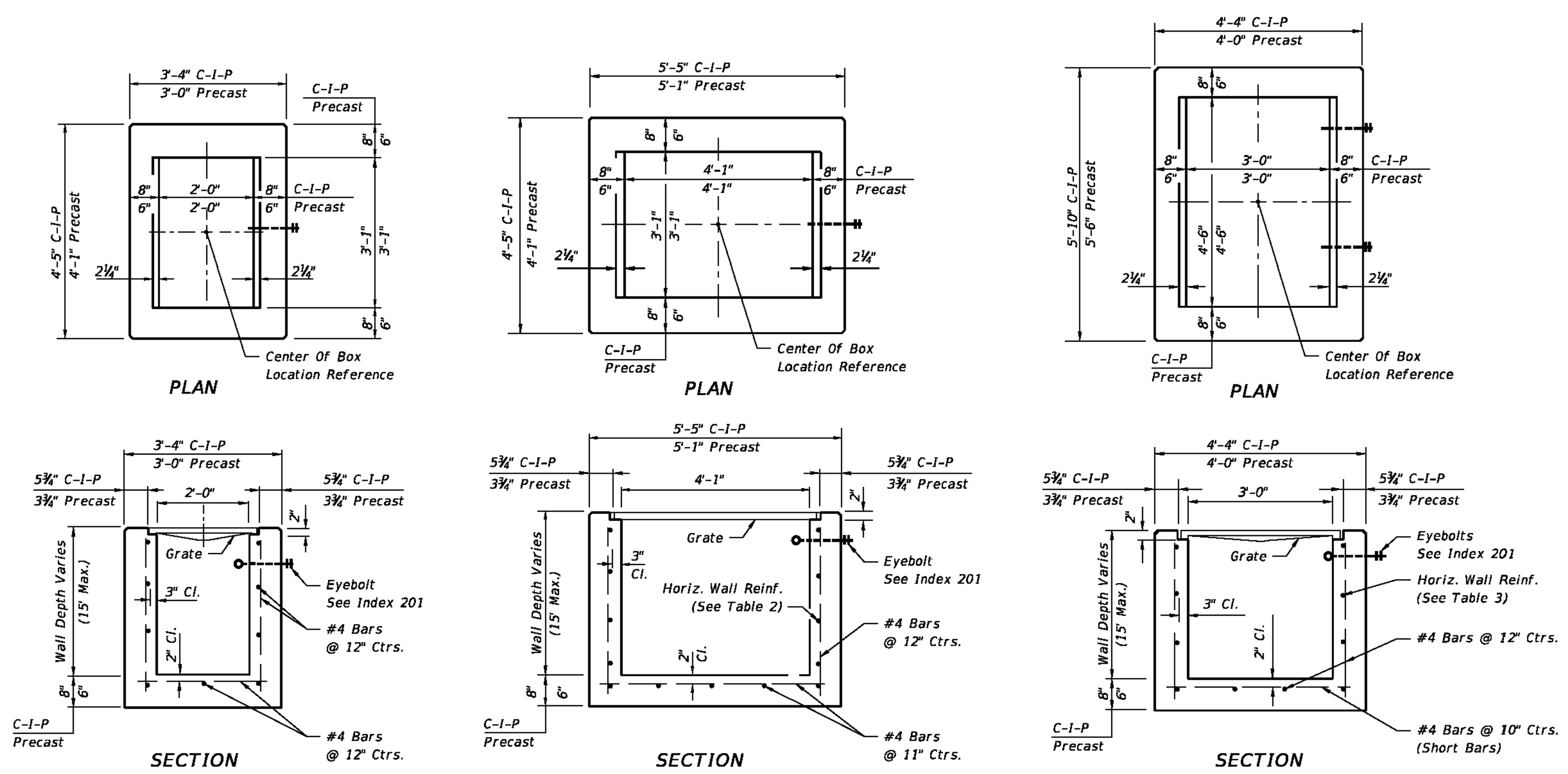

HORIZONTAL WALL REINFORCING SCHEDULES (TABLE 1)

WALL DEPTH	SCHEDULE	AREA (in.²/ft.)	MAX. SPACING BARS	MAX. SPACING WWF
0'-15'	A12	0.20	12"	8"

TYPE C

Recommended Maximum Pipe Size:

2'-0" Wall - 18" Pipe
3'-1" Wall - 24" Pipe (18" where an 18" pipe enters a 2'-0" wall)

HORIZONTAL WALL REINFORCING SCHEDULES (TABLE 2)

WALL DEPTH	SCHEDULE	AREA (in.²/ft.)	MAX. SPACING BARS	MAX. SPACING WWF
0'-6'	A12	0.20	12"	8"
6'-10'	A6	0.20	6"	5"
10'-13'	A4	0.20	4"	3"
10'-15'	B5.5	0.24	5½"	5"

TYPE D

Recommended Maximum Pipe Size:

3'-1" Wall - 24" Pipe
4'-1" Wall - 36" Pipe

HORIZONTAL WALL REINFORCING SCHEDULES (TABLE 3)

WALL DEPTH	SCHEDULE	AREA (in.²/ft.)	MAX. SPACING BARS	MAX. SPACING WWF
0'-5'	A12	0.20	12"	8"
0'-7.5'	A6	0.20	6"	5"
7.5'-10'	B5.5	0.24	5½"	5"
10'-15'	C6.5	0.37	6½"	6"

TYPE E

Recommended Maximum Pipe Size:

3'-0" Wall - 24" Pipe
4'-6" Wall - 36" Pipe

5/20/2014 2:28:39 PM

LAST REVISION 07/01/05	REVISION	DESCRIPTION:	FDOT 2015 DESIGN STANDARDS	DITCH BOTTOM INLET TYPES C, D, E AND H	INDEX NO. 232	SHEET NO. 1 of 7

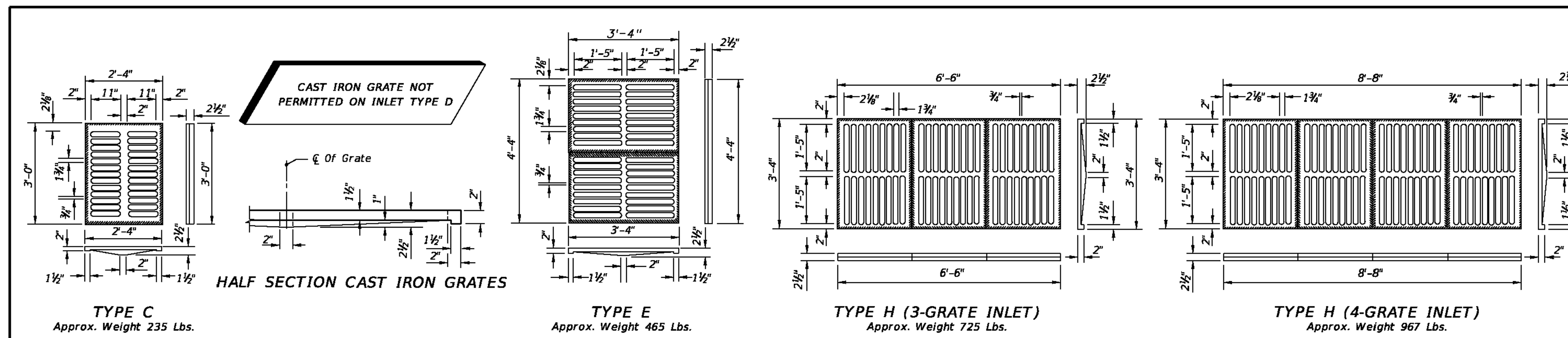

CAST IRON GRATES

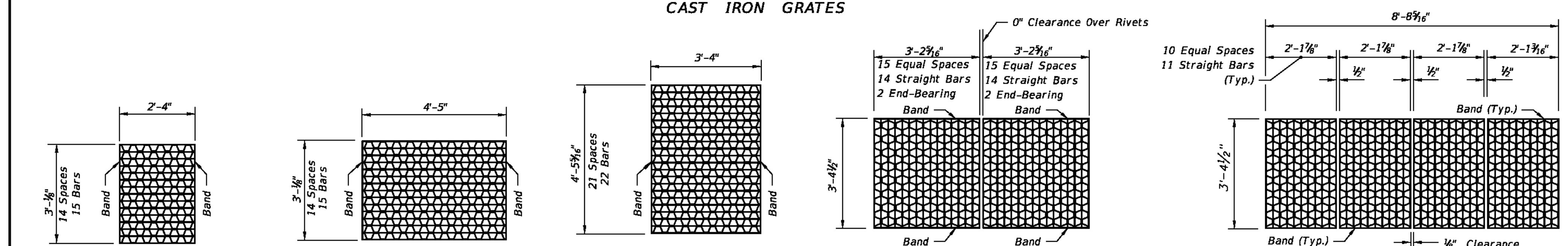

TYPE C
Straight Bars 2"x ¼"
Reticuline Bars 1¼" x 3⁄16"
Bands 2" x ¼"
Approx. Weight 104 Lbs.

TYPE D
Straight Bars 2" x ¼"
Reticuline Bars 1¼" x 3⁄16"
Bands 2" x ¼"
Approx. Weight 190 Lbs.

TYPE E
Straight Bars 2" x ¼"
Reticuline Bars 1¼" x 3⁄16"
Bands 2" x ¼"
Approx. Weight 215 Lbs.

TYPE H (2-GRATE INLET)
Straight End-Bearing Bars 2" x ⅜"
Straight Bearing Bars 2" x ¼"
Reticuline Bars 1¼" x 3⁄16"
Banding Bars 2" x ¼"
Approx. Total Weight 310 Lbs.

TYPE H (4-GRATE INLET)
Straight End-Bearing Bars 2" x ¼"
Reticuline Bars 1¼" x 3⁄16"
Banding Bars 2" x 3⁄16"
Approx. Total Weight 388 Lbs.

STEEL GRATES

NOTE: Steel Grates Are Required On Inlets With Traversable Slots And On Inlets where Bicycle Traffic Is Anticipated.

GENERAL NOTES

1. These inlets are suitable for bicycle traffic and are to be used in ditches, medians and other areas subject to infrequent traffic loadings but are not to be placed in areas subject to any heavy wheel loads. These inlets may be placed in areas subject to occasional pedestrian traffic such as landscaped areas and pavement areas where pedestrians can walk around the inlet.

2. Inlets subject to minimal debris should be constructed without slots. Where debris is a problem inlets should be constructed with slots. Slotted inlets located within roadway clear zones and areas subject to pedestrians shall have traversable slots. The traversable slot modification is not adaptable to inlet Type H. Slots may be constructed at either or both ends as shown on plans. Traversable slots shall not be used in areas subject to occasional bicycle traffic.

3. Steel grates are to be used on all inlets where bicycle traffic is anticipated. Steel grates are to be used on all inlets with traversable slots. Either cast iron or steel grates may be used on inlets without slots where bicycle traffic is not anticipated. Either cast iron or steel grates may be used on all inlets with non-traversable slots. Subject to the selection described above, when Alternate G grate is specified in the plans, either the steel grate, hot dip galvanized after fabrication, or the cast iron grate may be used, unless the plans stipulate the particular type.

4. Recommended maximum pipe sizes shown are for concrete pipe. Size for other types of pipe must be checked for fit.

5. All exposed edges and corners shall be ¾" chamfer or tooled to ¼" radius.

6. Concrete inlet pavement to be used on inlets without slots and inlets with non-traversable slots only when called for in the plans; but required on all traversable slot inlets. Cost to be included in contract unit price for inlets. Quantities shown are for information only.

7. Traversable slots constructed in existing inlets shall be paid for as inlets partial. For conversion work and method of payment see 'TRAVERSABLE SLOT INLETS (PARTIAL) FOR EXISTING INLETS'.

8. Sodding to be used on all inlets not located in paved areas and paid for under contract unit price for Performance Turf, SY.

9. For supplementary details see Index No. 201.

10. All reinforcing is Grade 60 bars with 2" min. cover unless otherwise noted. Bars to be cut or bent for 1½" clearance around pipe opening. Provide one additional #4 bar above and at each side of pipe opening.

5/20/2014 2:28:40 PM

LAST REVISION 07/01/10	REVISION	DESCRIPTION:	FDOT 2015 DESIGN STANDARDS	DITCH BOTTOM INLET TYPES C, D, E AND H	INDEX NO. 232	SHEET NO. 3 of 7

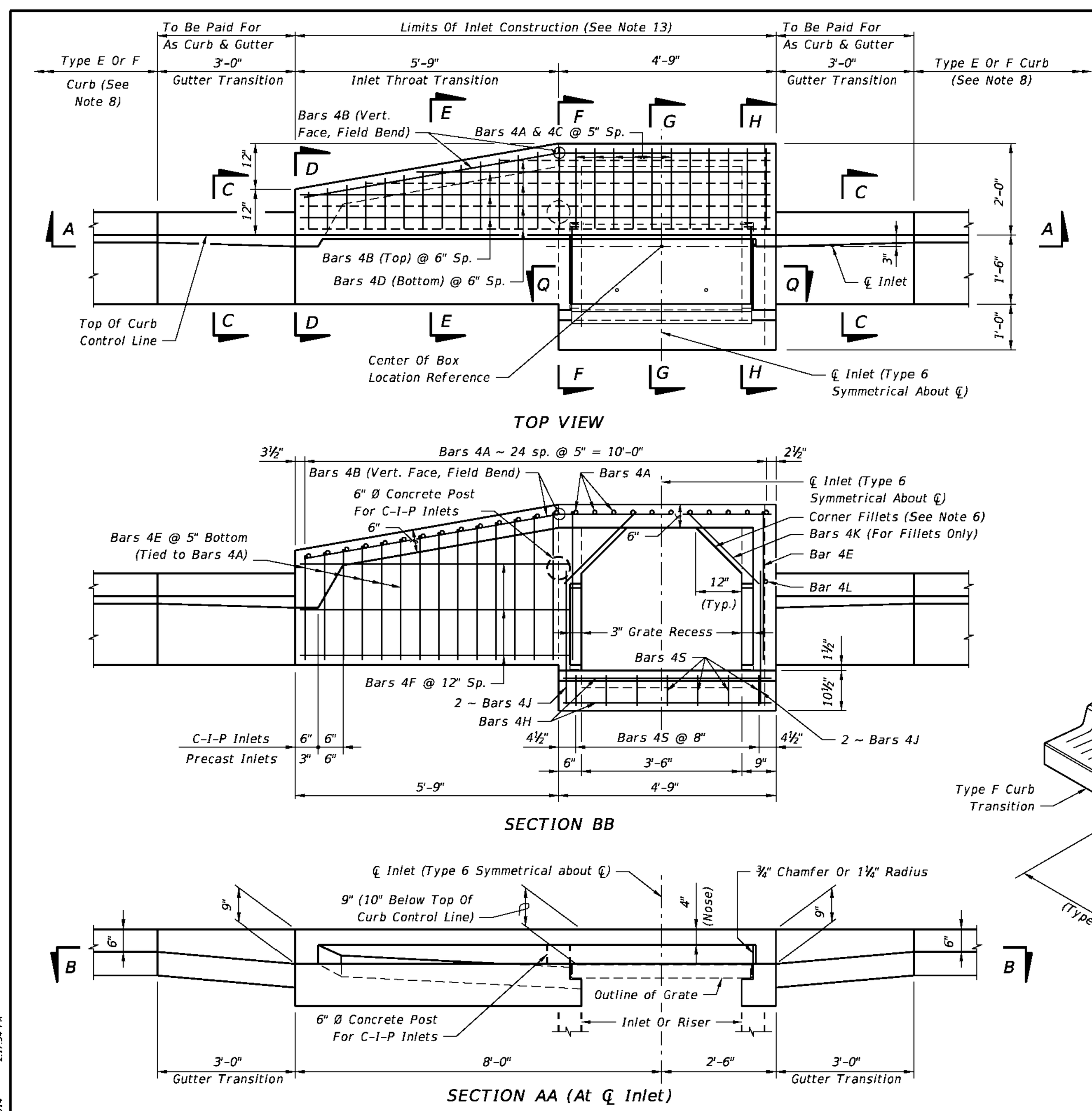

INLET TYPE 5 (Curb Inlet Type 6 Symmetrical With Left Half)

GENERAL NOTES

1. The finished grade and slope of the inlet tops are to conform with the finished cross slope and grade of the proposed sidewalk and/or border.
2. For inlets constructed on a curve, refer to the plans to determine the radius, and modify the inlet details accordingly. Bend steel when necessary.
3. All reinforcing steel to be Grade 60 bars with 1¼" minimum cover unless otherwise shown, see Sheet 4 for equivalent area Welded Wire Reinforcement details.
4. Inlet tops shall be either cast-in-place or precast concrete. Precast units shall conform to the dimensions shown or in accordance with approved shop drawing's. Request for shop drawing approval shall be directed to the State Drainage Engineer.
5. Concrete meeting the requirements of ASTM C478 (4,000 psi) may be used in lieu of Class II concrete for precast units, manufactured in plants which meet the requirements of Section 449 of the Specifications.
6. Corner fillets are required at inlet opening for precast units or C-I-P units used in conjunction with circular inlet bottoms or skewed rectangular inlet boxes. Finish top of fillets flush with drain throat bottom and match slope.
7. For inlet bottoms see Index No. 200. Inlet tops are to be used with Type P bottoms, or Type J bottoms with 3'-6" square (Type B), 3'-6" or 4' round (Type A) risers or top slab openings.
8. These inlet tops are designed for use with standard curb and gutter Type E and Type F. Locate inlet outside of pedestrian crosswalks. For Type E curb, transition the shape of the curb over the gutter transition length to match the face of the inlet (Type F).
9. See Index No. 201 for supplemental details.
10. All steel used for frame and grate shall meet the requirements of ASTM A36/A36M.
11. Either cast iron grates or steel grates may be used.
12. When Alternate "G" grate is specified in the plans either the cast iron grate and galvanized steel frame or the the galvanized steel grate and frame must be used. Grates are to be grouted in accordance with the grouting detail shown on Sheet 5, in lieu of tack welding.
13. Inlet to be paid for under the contract unit price for Inlets (Curb) (Type _), Each.

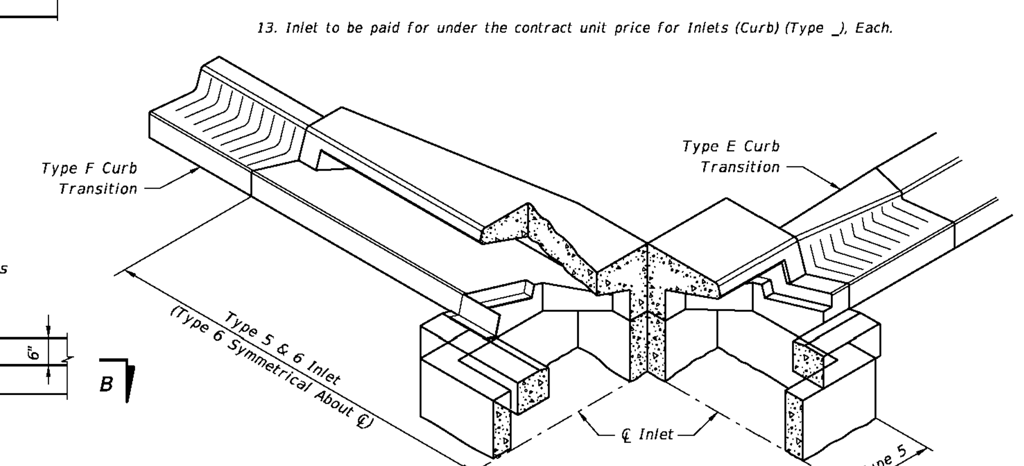

SKETCH SHOWING FRAME SEAT AND THROAT RECESS

5/20/2014 2:17:54 PM

LAST REVISION 01/01/10	REVISION	DESCRIPTION:	FDOT 2015 DESIGN STANDARDS	CURB INLET TOPS TYPES 5 AND 6	INDEX NO. 211	SHEET NO. 1 of 5

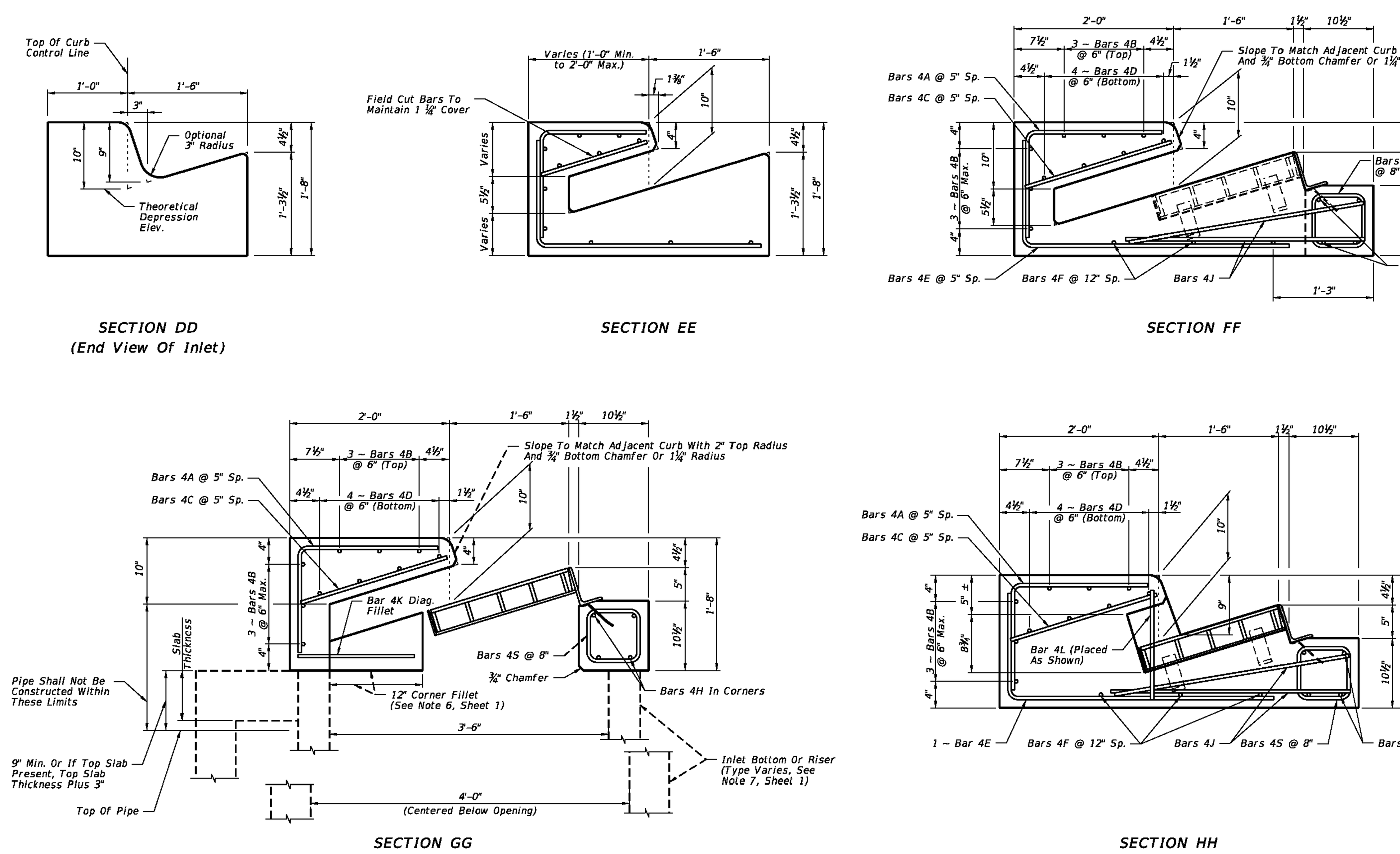

CROSS REFRENCES:
For General Notes See Sheet 1.
For Location Of Sections DD Thru HH See Sheet 1.

PRECAST DETAILS

5/20/2014 2:17:54 PM

LAST REVISION 07/01/12	REVISION	DESCRIPTION:	FDOT 2015 DESIGN STANDARDS	CURB INLET TOPS TYPES 5 AND 6	INDEX NO. 211	SHEET NO. 2 of 5

HEIDT DESIGN
Civil Engineering • Planning & GIS
Transportation Engineering
Ecological Services • Landscape Architecture
Engineering Business Certificate of Authorization No. 28782
Landscape Architecture Certificate of Authorization No. LC26000405
5806-B Breckenridge Pkwy.
Tampa, Florida 33610
Office: 813-253-5311
Fax: 813-464-7629
www.HeidtDesign.com

RANGELAND BOULEVARD WEST EXTENSION PHASE 2

DRAINAGE DETAILS

PREPARED FOR: WS-TSR, LLC

	DATE	DESCRIPTION
1	12/30/2015	INITIAL REVIEW SUBMITTAL

PROJECT NO:	TSR SR 1072
FILE:	DD
DESIGN BY:	MOORE
DRAWN BY:	JONES

FLORIDA PROFESSIONAL ENGINEER
GARY D. MILLER
DATE:
REGISTRATION NO. 52717

C-375

R:\STARKEY RANCH\RANGELAND BLVD WEST EXT PHASE 2\ENGINEERING\DD.DWG-C-375 2015/12/30 9:43 AM MARK JONES

© COPYRIGHT 2015, HEIDT DESIGN, LLC. ALL RIGHTS RESERVED. NO DOCUMENTATION (INCLUDING BUT NOT LIMITED TO DRAWINGS OR EXHIBITS) MAY BE COPIED, REPRODUCED, OR DISTRIBUTED UNLESS SPECIFIC WRITTEN PERMISSION HAS BEEN OBTAINED FROM HEIDT DESIGN, LLC. IN ADVANCE. CONSENT IS HEREBY GRANTED SPECIFICALLY TO GOVERNMENTAL AGENCIES TO REPRODUCE THIS DOCUMENTATION IN COMPLIANCE WITH F.S. CHAPTER 119.

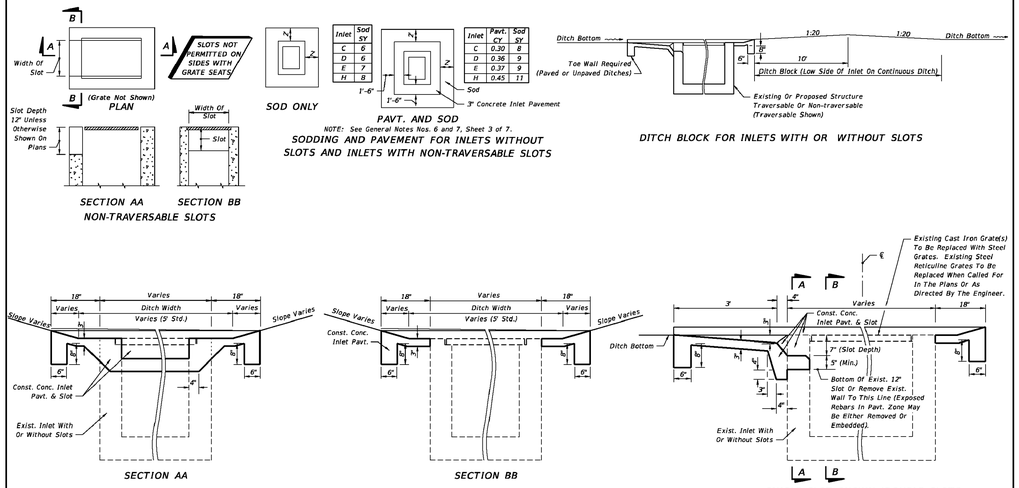

Inlet	Sod SY
C	6
D	6
E	7
H	8

Inlet	Pavt. CY	Sod SY
C	0.30	8
D	0.36	9
E	0.37	9
H	0.45	11

PAVEMENT AND SODDING QUANTITIES FOR TRAVERSABLE SLOTS

Inlet	Pavement				Sod	
	Single Slot		Double Slot		Single Slot	Double Slot
	SY	CY	SY	CY	SY	SY
C	4.87	0.83	6.16	1.05	12	16
D	5.99	1.01	7.70	1.30	14	19
E	5.88	0.99	7.37	1.24	14	18

NOTE: For plan view and additional details see Sheet 4 of 7.
For payment see General Notes Nos. 6 and 7, Sheet 3 of 7.

TRAVERSABLE SLOTS FOR EXISTING INLETS

LAST REVISION	REVISION	DESCRIPTION:			INDEX NO.	SHEET NO.
07/01/00			2015 DESIGN STANDARDS	DITCH BOTTOM INLET TYPES C, D, E AND H	232	5 of 7

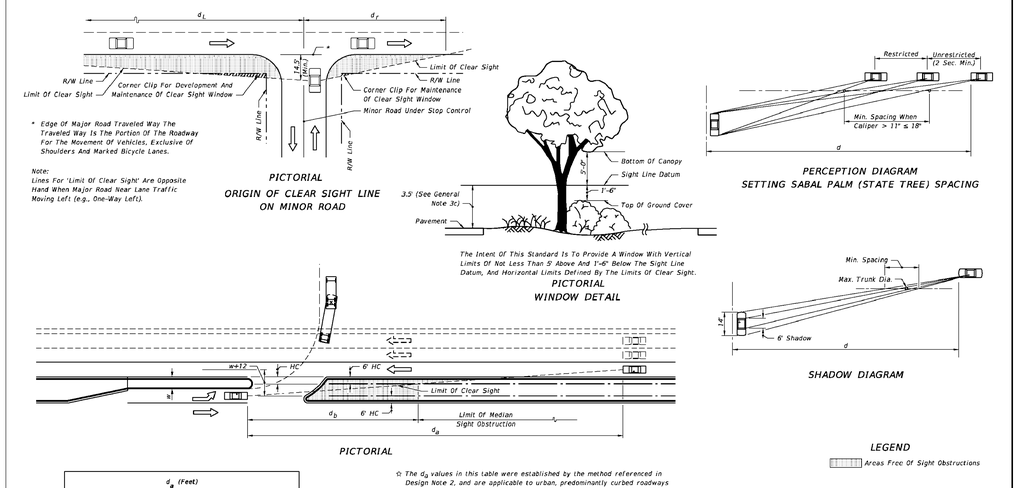

d_a (Feet)										
Design Speed MPH	1 Lane Crossed			2 Lanes Crossed			3 Lanes Crossed			
	P	SU	Comb.	P	SU	Comb.	P	SU	Comb.
30	245	290	330	265	320	365	290	350	395
35	285	335	385	310	370	425	335	410	460
40	325	385	440	355	425	485	385	465	525
45	365	430	495	400	475	545	430	525	590

☆ See Note

☆ The d_a values in this table were established by the method referenced in Design Note 2, and are applicable to urban, predominantly curbed roadways with design speeds of 45 mph or less and meeting the restricted conditions defined in Index No. 700. For horizontal clearance (HC) of six feet (6), the values for d_b may be determined by the equation $d_b = d_a (w/(w+12))$. For roadways with nonrestricted conditions, d_a and d_b should be based on the geometry for the left turn storage and on clear zone widths (See Index No. 700).

For wide medians where the turning vehicle can approach the through lanes at or near 90°, use d_a values from tables on sheets 5 or 6. (The clear sight line origin is assumed to be 14.5' from the edge of the near lane.)

CHANNELIZED DIRECTIONAL MEDIAN OPENINGS

LAST REVISION	REVISION	DESCRIPTION:			INDEX NO.	SHEET NO.
07/01/14			2015 DESIGN STANDARDS	SIGHT DISTANCE AT INTERSECTIONS	546	2 of 6

DIMENSIONS AND QUANTITIES

	D	X	A	B	C	E	F	G	H ■	M Single Pipe	M Double Pipe	M Triple Pipe	M Quad. Pipe	N	5½" CONCRETE SLAB (CY) ☑ Single Pipe	Double Pipe	Triple Pipe	Quad. Pipe	SODDING (SY) Single Pipe	Double Pipe	Triple Pipe	Quad. Pipe
1:2 Slope	15"	2'-7"	1.92'	2.18'	4.10'	2.06'	5'	1.22'	2.9'	4.63'	7.21'	9.79'	12.37'	1.19'	0.38	0.58	0.77	0.96	21	24	27	30
	18"	2'-10"	1.97'	2.24'	4.21'	2.56'	6'	1.41'	3.4'	4.92'	7.75'	10.58'	13.42'	1.21'	0.44	0.65	0.87	1.09	22	25	28	31
	24"	3'-5"	2.06'	3.85'	5.91'	3.56'	7'	1.73'	3.4'	5.50'	8.92'	12.33'	15.75'	1.25'	0.54	0.83	1.11	1.42	24	28	32	35
	30"	4'-3"	2.15'	4.85'	7.10'	4.56'	8'	2.00'	3.4'	6.08'	10.33'	14.58'	18.83'	1.29'	0.66	1.09	1.50	1.91	26	31	35	40
	36"	5'-1"	2.25'	6.08'	8.33'	5.56'	9'	2.24'	3.4'	6.67'	11.75'	16.83'	21.92'	1.33'	0.81	1.38	1.95	2.51	28	34	39	45
	42"	6'-0"	2.34'	7.21'	9.53'	6.56'	10'	2.45'	3.4'	7.25'	13.25'	19.25'	25.25'	1.38'	0.97	1.70	2.45	3.19	30	37	43	50
	48"	6'-9"	2.43'	8.33'	10.76'	7.56'	11'	2.65'	3.4'	7.83'	14.58'	21.33'	28.08'	1.42'	1.13	2.04	2.93	3.84	32	39	47	54
	54"	7'-8"	2.52'	9.44'	11.96'	8.56'	12'	2.83'	3.4'	8.42'	16.08'	23.75'	31.42'	1.46'	1.31	2.44	3.58	4.72	34	42	51	59
	60"	8'-6"	2.62'	10.58'	13.18'	9.56'	14'	3.00'	4.4'	9.00'	17.50'	26.00'	34.50'	1.50'	1.51	2.89	4.28	5.68	36	45	55	64
	66"	9'-2"	2.71'	11.68'	14.39'	10.56'	15'	3.18'	4.4'	9.58'	18.75'	27.92'	37.08'	1.54'	1.68	3.25	4.84	6.43	38	48	58	68
	72"	10'-0"	2.80'	12.80'	15.60'	11.56'	16'	3.30'	4.4'	10.16'	20.16'	30.16'	40.16'	1.58'	1.89	3.74	5.59	7.45	40	51	62	73
1:4 Slope	15"	2'-7"	2.27'	4.09'	6.36'	4.07'	8'	1.22'	4.0'	4.63'	7.21'	9.79'	12.37'	1.19'	0.57	0.87	1.15	1.44	23	26	29	32
	18"	2'-10"	2.36'	5.12'	7.48'	5.03'	9'	1.41'	4.0'	4.92'	7.75'	10.58'	13.42'	1.21'	0.66	0.99	1.31	1.65	25	28	31	35
	24"	3'-5"	2.53'	7.18' △	9.71'	7.03' △	11'	1.73'	4.0'	5.50'	8.92'	12.33'	15.75'	1.25'	0.85	1.30	1.75	2.20	28	32	36	40
	30"	4'-3"	2.70'	9.25'	11.95'	9.03'	13'	2.00'	4.0'	6.08'	10.33'	14.58'	18.83'	1.29'	1.10	1.74	2.39	3.05	31	36	41	46
	36"	5'-1"	2.87'	11.31' ◇	14.18'	11.03' ◇	15'	2.24'	4.0'	6.67'	11.75'	16.83'	21.92'	1.33'	1.32	2.21	3.08	3.96	34	40	46	52
	42"	6'-0"	3.03'	13.37'	16.42'	13.03'	17'	2.45'	4.0'	7.25'	13.25'	19.25'	25.25'	1.38'	1.58	2.76	3.91	5.09	36	44	51	58
	48"	6'-9"	3.22'	15.43'	18.65'	15.03'	19'	2.65'	4.0'	7.83'	14.58'	21.33'	28.08'	1.42'	1.85	3.30	4.73	6.17	41	48	56	63
	54"	7'-8"	3.39'	17.49'	20.88'	17.03'	21'	2.83'	4.0'	8.42'	16.08'	23.75'	31.42'	1.46'	2.14	3.95	5.77	7.58	44	52	61	69
	60"	8'-6"	3.56'	19.55'	23.11'	19.03'	23'	3.00'	4.0'	9.00'	17.50'	26.00'	34.50'	1.50'	2.45	4.66	6.87	9.07	47	56	66	75
	66"	9'-2"	3.73'	21.62'	25.35'	21.03'	25'	3.18'	4.0'	9.58'	18.75'	27.92'	37.08'	1.54'	2.88	5.54	8.18	10.84	49	59	69	80
	72"	10'-0"	3.91'	23.68'	27.59'	23.03'	27'	3.30'	4.0'	10.16'	20.16'	30.16'	40.16'	1.58'	3.54	6.61	9.87	13.13	52	63	74	85

☑ See General Note No. 5. See Sheet 5 For 3" Slab Quantities

■ Values shown for estimating pipe quantities and are for information only.

B	E	
△ 6.42'	△ 6.25'	Dimensions permitted to allow use of 8' standard pipe lengths.
◇ 10.40'	◇ 10.10'	Dimensions permitted to allow use of 12' standard pipe lengths.

△ ◇ Concrete slab shall be deepened to form bridge across crown of pipe. See section below.

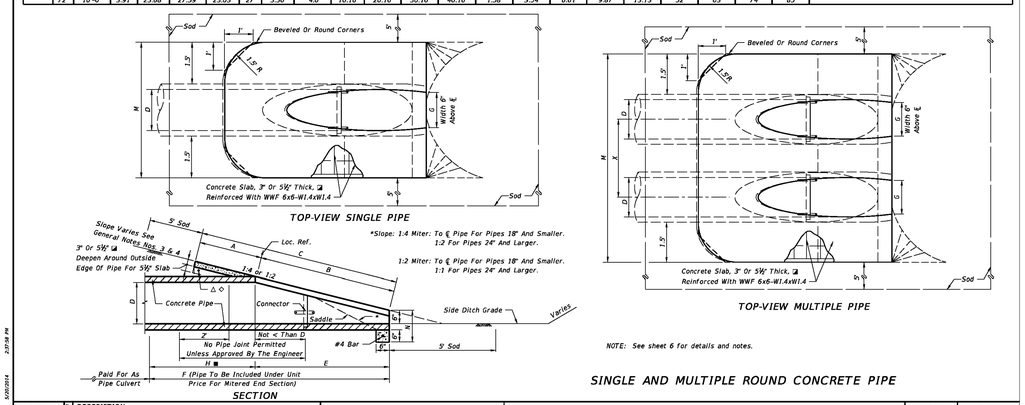

NOTE: See sheet 6 for details and notes.

SINGLE AND MULTIPLE ROUND CONCRETE PIPE

LAST REVISION	REVISION	DESCRIPTION:			INDEX NO.	SHEET NO.
07/01/02			2015 DESIGN STANDARDS	CROSS DRAIN MITERED END SECTION	272	1 of 6

GENERAL NOTES

1. Unless otherwise designated in the plans, concrete pipe mitered end sections may be used with any type of cross drain pipe; corrugated steel pipe mitered end sections may be used with any type of cross drain pipe except aluminum pipe; and, corrugated aluminum mitered end sections may be used with any type of cross drain pipe except steel pipe. When bituminous coated metal pipe is specified for cross drain pipe, mitered end sections shall be constructed with like pipe or concrete pipe. When the mitered end section pipe is dissimilar to the cross drain pipe, a concrete jacket shall be constructed in accordance with Standard Index 280.
2. Corrugated polyethylene pipe (HDPE), polyvinyl-chloride pipe (PVC) and polypropylene pipe (PPP) for cross drain applications shall utilize either corrugated metal or concrete mitered end sections (MES). When used in conjunction with corrugated (MES), connection shall be by either a formed metal band specifically designated to join HDPE or PVC pipe, with metal pipe or other coupler approved by the State Drainage Engineer. When used in conjunction with a concrete (MES), connection shall be by concrete jacket constructed in accordance with Index No. 280.
3. Mitered end sections for pipe sizes 15", 18" and 24" round or equivalent pipe arch or elliptical pipe are permitted within the clear zone. When the slope intersection permits, the mitered end section may be located with the culvert opening as close as 8' beyond the outside edge of the shoulder.
4. Slope and ditch transitions shall be used when the normal roadway slope must be flattened to place end section outside clear zone. See detail left.
5. The reinforced concrete slab shall be constructed for all sizes of cross drain pipe and cast in place with Class NS concrete. Slabs shall be 5½" thick unless 3" thickness called for in plans.
6. Concrete pipe used in the assembly of mitered end sections shall be selective lengths to avoid excessive connections.
7. Corrugated metal pipe galvanizing that is damaged during beveling and perforating for mitered end section shall be repaired.
8. That portion of corrugated metal pipe in direct contact with the concrete slab and extending 12" beyond shall be bituminous coated prior to placing of the concrete.
9. When existing multiple cross drain pipes are spaced other than the dimensions shown in this detail, or have non-parallel axes, or have non-uniform sections, the mitered end sections will be constructed either separately as single pipe mitered end sections or collectively as multiple pipe end sections as directed by the Engineer; however, mitered end sections will be paid for each based on each independent pipe end.
10. The cost of all pipe(s), fasteners, reinforcing, connectors, anchors, concrete, sealants, jackets, and coupling bands shall be included in the cost for the mitered end section. Sodding shall be paid for separately under the contract unit price of Performance Turf, SY.
11. Mitered end sections shall be paid for under the contract unit price for Mitered End Section (CD), Each, based on each independent pipe end.

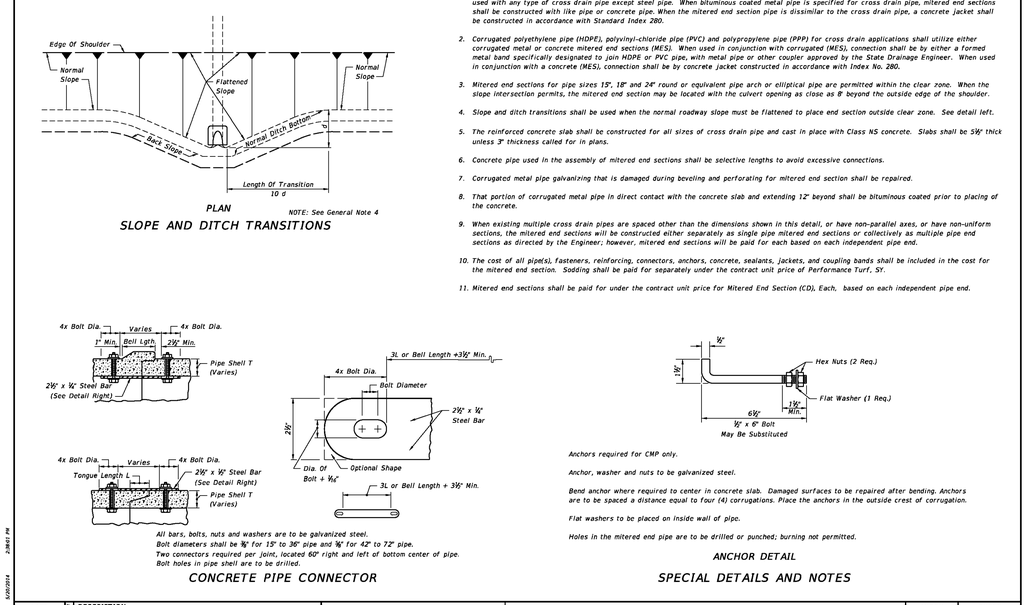

LAST REVISION	REVISION	DESCRIPTION:			INDEX NO.	SHEET NO.
07/01/12			2015 DESIGN STANDARDS	CROSS DRAIN MITERED END SECTION	272	6 of 6

HEIDT DESIGN
Civil Engineering • Planning & GIS
Transportation Engineering
Ecological Services • Landscape Architecture
Engineering Business Certificate of Authorization No. 28782
Landscape Architecture Certificate of Authorization No. LC26000405
5806-B Breckenridge Pkwy.
Tampa, Florida 33610
Office: 813-253-5311
Fax: 813-464-7629
www.HeidtDesign.com

RANGELAND BOULEVARD
WEST EXTENSION PHASE 2

DRAINAGE DETAILS

WS-TSR, LLC

PREPARED FOR:

DATE:	DESCRIPTION
12/30/2015	INITIAL REVIEW SUBMITTAL

PROJECT NO:	TSR SR 1072
FILE:	DD
DESIGN BY:	MOORE
DRAWN BY:	JONES

FLORIDA PROFESSIONAL ENGINEER

GARY D. MILLER
DATE:
REGISTRATION NO. 52717

C-376

R:\STARREY RANCH\RANGELAND BLVD WEST EXT PHASE 2\ENGINEERING\DD.DWG-C-376 2015\12\30 9:43 AM MARK JONES

© COPYRIGHT 2015 HEIDT DESIGN, LLC. ALL RIGHTS RESERVED. NO DOCUMENTATION INCLUDING BUT NOT LIMITED TO DRAWINGS OR EXHIBITS MAY BE REPRODUCED OR TRANSMITTED IN ANY FORM OR BY ANY MEANS, ELECTRONIC OR MECHANICAL, WITHOUT PERMISSION. THIS DOCUMENT IS HEREBY GRANTED SPECIFICALLY TO GOVERNMENTAL AGENCIES TO REPRODUCE THIS DOCUMENTATION IN COMPLIANCE WITH F.S. CHAPTER 119.

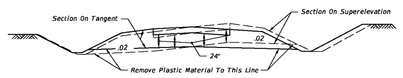

TYPICAL CUT SECTION

Note: When this detail is applied to minor collectors and local facilities, the undercut may be reduced to 18".

REMOVAL OF PLASTIC MATERIAL ON DIVIDED FREEWAYS, ARTERIALS AND MAJOR COLLECTORS HAVING FLUSH MEDIANS, AND ON UNDIVIDED ARTERIALS AND MAJOR COLLECTORS

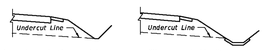

At locations where plastic material is being removed, the side ditches must be at least as deep as the undercut plane.

Where paved side ditches are used in areas of removal of plastic material, the top of the ditch pavement must be no higher than the undercut plane.

MISCELLANEOUS DETAILS

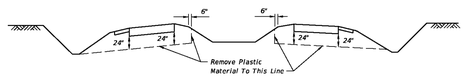

TYPICAL CUT SECTION ON TANGENT

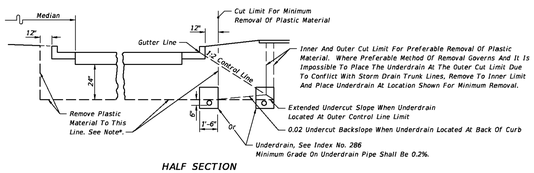

HALF SECTION

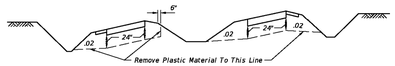

TYPICAL CUT SECTION ON SUPERELEVATION

REMOVAL OF PLASTIC MATERIAL ON INTERSTATE FACILITIES, FREEWAYS, DIVIDED ARTERIALS AND MAJOR COLLECTORS HAVING DEPRESSED MEDIANS

NOTES:

Refer to roadway cross sections to determine whether minimum or preferable removal is used.

* Where frequency of median breaks indicates that it is impractical to leave plastic material in the median, the designer may elect to indicate total removal of this material. If during construction it becomes apparent, due to normal required construction procedures, that it is impractical to leave the plastic material in the median, total removal of this material shall be approved by the Engineer.

REMOVAL OF PLASTIC MATERIAL AND LOCATION OF UNDERDRAIN IN URBAN CONSTRUCTION

REMOVAL OF PLASTIC MATERIAL

Note: For GENERAL NOTES see Sheet 1.

LAST REVISION	REVISION	DESCRIPTION:	FDOT 2015 DESIGN STANDARDS	REMOVAL OF ORGANIC AND PLASTIC MATERIAL	INDEX NO.	SHEET NO.
07/01/09					500	2 of 2

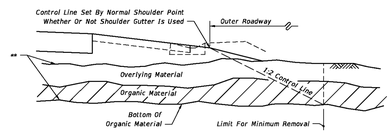

WITH OVERBURDEN - HALF SECTION

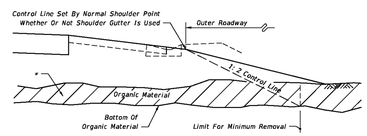

WITHOUT OVERBURDEN - HALF SECTION

IN RURAL CONSTRUCTION

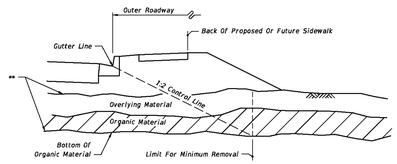

WITH OVERBURDEN - HALF SECTION

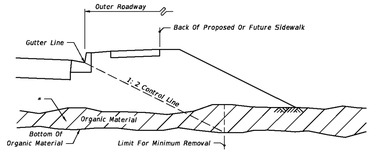

WITHOUT OVERBURDEN - HALF SECTION

IN URBAN CONSTRUCTION

** Remove Overlying Material And Organic Material Within The Limits Shown And Backfill In Accordance With Index No. 505, Unless Otherwise Called For In The Plans Or Directed Otherwise By The District Geotechnical Engineer; The Limits Include Full Median Width When Applied To Divided Facilities With Median Widths Up To 64'; When Median Width Is Greater Than 64' And For Bifurcated Roadways The Organic Material Removal Limits Will Be Set By A 1:2 Control Line Complimentary To The Outer Roadway That Will Accommodate One Future Median Lane On Each Roadway Unless Specified Otherwise By The Plans.

* Remove Organic Material Within The Limits Shown And Backfill In Accordance With Index No. 505, Unless Otherwise Called For In The Plans Or Directed Otherwise By The District Geotechnical Engineer; The Limits Include Full Median Width When Applied To Divided Facilities With Median Widths Up To 64'; When Median Width Is Greater Than 64' And For Bifurcated Roadways The Organic Material Removal Limits Will Be Set By A 1:2 Control Line Complimentary To The Outer Roadway That Will Accommodate One Future Median Lane On Each Roadway Unless Specified Otherwise By The Plans.

REMOVAL OF ORGANIC MATERIAL

GENERAL NOTES

1. All details shown on this Index for removal of organic and plastic materials apply unless otherwise shown on the plans.
2. Utilization of excavated materials shall be in accordance with Index No. 505.
3. Where organic or plastic material is undercut, backfill shall be made of suitable material in accordance with Index No. 505, unless otherwise shown on the plans.
4. The term "Plastic Material" used in this index in conjunction with removal of plastic soil is as defined under soil classifications for Plastic (P) and High Plastic (H) on Index No. 505.
5. The term "Organic Material" as used on this index is defined as any soil which has an average organic content greater than five (5.0) percent, or an individual organic content test result which exceeds seven (7.0) percent. Organic material shall be removed as shown on this Index and the plans unless directed otherwise by the District Geotechnical Engineer. Average organic content shall be determined from the test results from a minimum of three randomly selected samples from each stratum. Tests shall be performed in accordance with AASHTO T 267 on the portion of a sample passing the No. 4 sieve.
6. The normal depth of side ditches shall be 3.5' below the shoulder point except in special cases.
7. In municipal areas, where underdrain is to be constructed beneath the proposed pavement, the grade of the underdrain filter material will not extend above the bottom of the stabilized section of the subgrade. Gradation of the filter material shall conform to FDOT specifications. Minimum grade on underdrain pipe shall be 0.2%.
8. See Index No. 506 for miscellaneous earthwork details.

DESIGN NOTES

1. At locations where organic material or other soft soil deposits persists to such depth that removal is impractical, the construction of a geosynthetic foundation over those soils should be considered. The Engineer of Record should request guidance from the District Geotechnical Engineer and make a geosynthetic foundation design in accordance with Index No. 501 when pursuing geosynthetic alternates.
2. The designer shall take into consideration the expectancy of roadway widening to the outside, and where widening is anticipated specify in the plans the limits of removal of organic and plastic materials necessary to accommodate anticipated widening.

LAST REVISION	REVISION	DESCRIPTION:	FDOT 2015 DESIGN STANDARDS	REMOVAL OF ORGANIC AND PLASTIC MATERIAL	INDEX NO.	SHEET NO.
07/01/02					500	1 of 2

HEIDT DESIGN
Civil Engineering • Planning & GIS
Transportation Engineering
Ecological Services • Landscape Architecture
Engineering Business Certificate of Authorization No. 28782
Landscape Architecture Certificate of Authorization No. LC26000405
5806-B Breckenridge Pkwy.
Tampa, Florida 33610
Office: 813-253-5311
Fax: 813-464-7629
www.HeidtDesign.com

RANGELAND BOULEVARD
WEST EXTENSION PHASE 2

DRAINAGE DETAILS

PREPARED FOR: WS-TSR, LLC

DATE	DESCRIPTION

1	12/30/2015	INITIAL REVIEW SUBMITTAL
	DATE:	DESCRIPTION:

PROJECT NO: TSR SR 1072
FILE: DD
DESIGN BY: MOORE
DRAWN BY: JONES

FLORIDA PROFESSIONAL ENGINEER

GARY D. MILLER
DATE:
REGISTRATION NO. 52717

C-377

R:\STARKEY RANCH\RANGELAND BLVD WEST EXT PHASE 2\ENGINEERING\DD.DWG-C-378 2015/12/30 9:43 AM MARK JONES

© COPYRIGHT 2015, HEIDT DESIGN, LLC - ALL RIGHTS RESERVED. NO DOCUMENTATION (INCLUDING BUT NOT LIMITED TO DRAWINGS OR EXHIBITS) MAY BE REPRODUCED OR TRANSMITTED IN ANY FORM OR BY ANY MEANS, ELECTRONIC OR MECHANICAL, WITHOUT THE PRIOR WRITTEN CONSENT OF HEIDT DESIGN, LLC IS HEREBY GRANTED SPECIFICALLY TO GOVERNMENTAL AGENCIES TO REPRODUCE THIS DOCUMENTATION IN COMPLIANCE WITH F.S. CHAPTER 119.

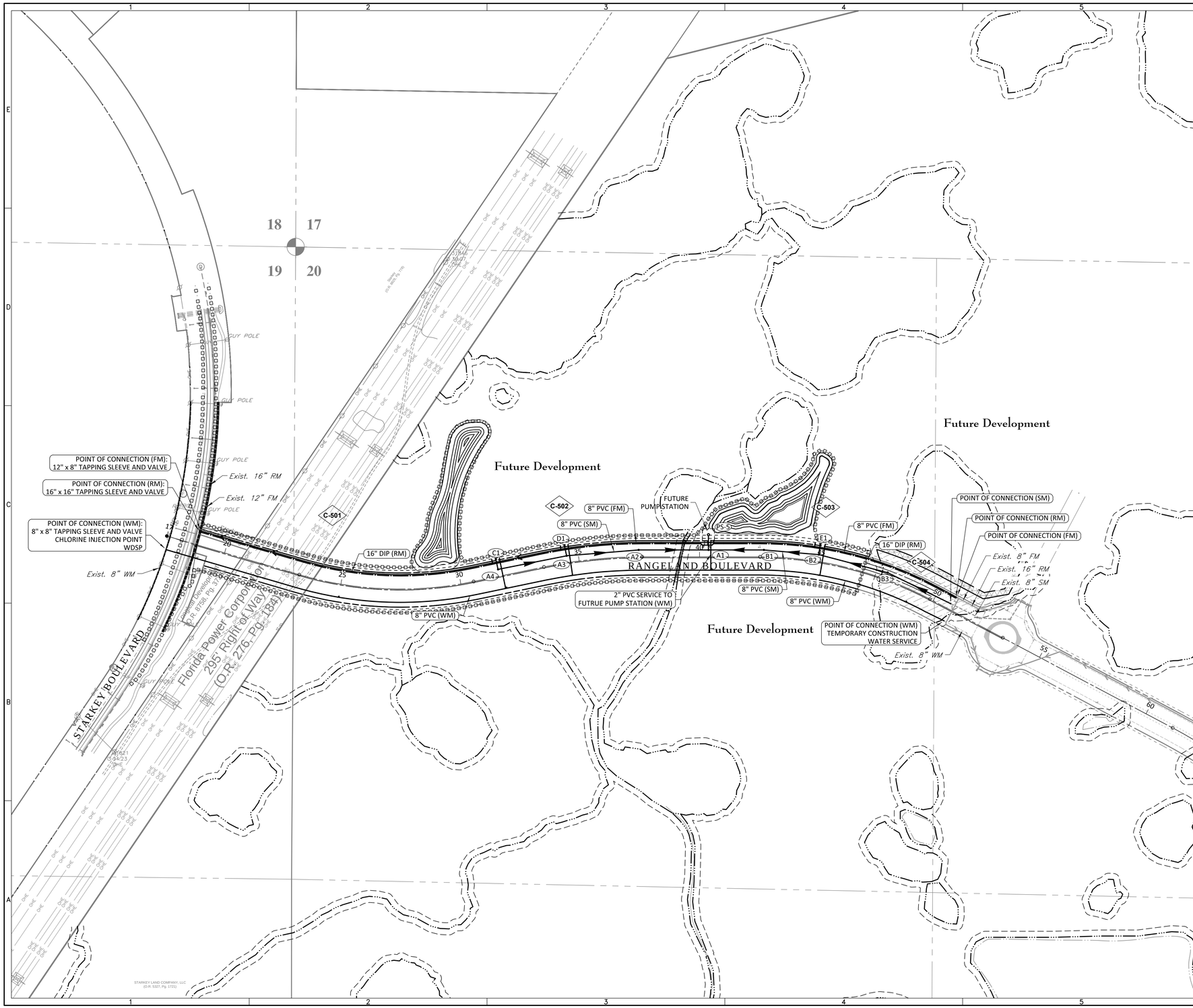

N

0 200 400

GRAPHIC SCALE: 1" = 200'

ELEVATIONS BASED ON:
NORTH AMERICAN VERTICAL DATUM 1988
CONVERSION:
NAVD 88 TO NGVD 29 = +0.85

GENERAL LEGEND

- WETLAND LINE
- WETLAND CONS. AREA SETBACK
- 12" Oak — EXISTING TREE TO BE REMOVED
- 12" Oak — EXISTING TREE TO BE PROTECTED
- PROPOSED TREE BARRICADE
- STAKED EROSION CONTROL
- C-510 — PLAN & PROFILE SHEET NUMBER

WATER & SEWER LEGEND

EXISTING	PROPOSED	
10	10	STORM STRUCTURE NUMBER STORM DRAINAGE STRUCTURE
A1	A1	SANITARY SEWER (SM)
		SANITARY FORCE MAIN (FM)
		WATER MAIN (WM)
		RECLAIMED WATER MAIN (RM)
		FIRE HYDRANT
		VALVE & BOX
		REDUCER
		PLUG
		BLOW-OFF
		BENDS
		VERTICAL BENDS

WDSP # — WATER DISTRIBUTION SAMPLING POINT

HEIDT DESIGN
Civil Engineering • Planning & GIS
Transportation Engineering
Ecological Services • Landscape Architecture
Engineering Business Certificate of Authorization No. 28782
Landscape Architecture Certificate of Authorization No. LC26000415

5806-B Breckenridge Pkwy.
Tampa, Florida 33610
Office: 813-253-5311
Fax: 813-464-7629

www.HeidtDesign.com

RANGELAND BOULEVARD WEST EXTENSION PHASE 2

MASTER UTILITY PLAN

WS-TSR, LLC

PREPARED FOR:

DATE	DESCRIPTION

DATE	DESCRIPTION
12/30/2015	INITIAL REVIEW SUBMITTAL
1	

PROJECT NO:	TSR SR 1072
FILE:	WS-KEY
DESIGN BY:	MOORE
DRAWN BY:	JONES

FLORIDA PROFESSIONAL ENGINEER

GARY D. MILLER
DATE:
REGISTRATION NO. 52717

C-400

R:\STARKEY RANCH\RANGELAND BLVD WEST EXT PHASE 2\ENGINEERING\WS-KEY.DWG-C-400 2015\12\30 9:44 AM MARK JONES

© COPYRIGHT 2015, HEIDT DESIGN, LLC. ALL RIGHTS RESERVED. NO DOCUMENTS INCLUDING BUT NOT LIMITED TO DRAWINGS OR EXHIBITS MAY BE COPIED, REPRODUCED, OR DISTRIBUTED UNLESS SPECIFIC WRITTEN PERMISSION HAS BEEN OBTAINED FROM HEIDT DESIGN, LLC. IN ADVANCE. CONSENT IS HEREBY GRANTED SPECIFICALLY TO GOVERNMENTAL AGENCIES TO REPRODUCE THIS DOCUMENTATION IN COMPLIANCE WITH F.S. CHAPTER 119.

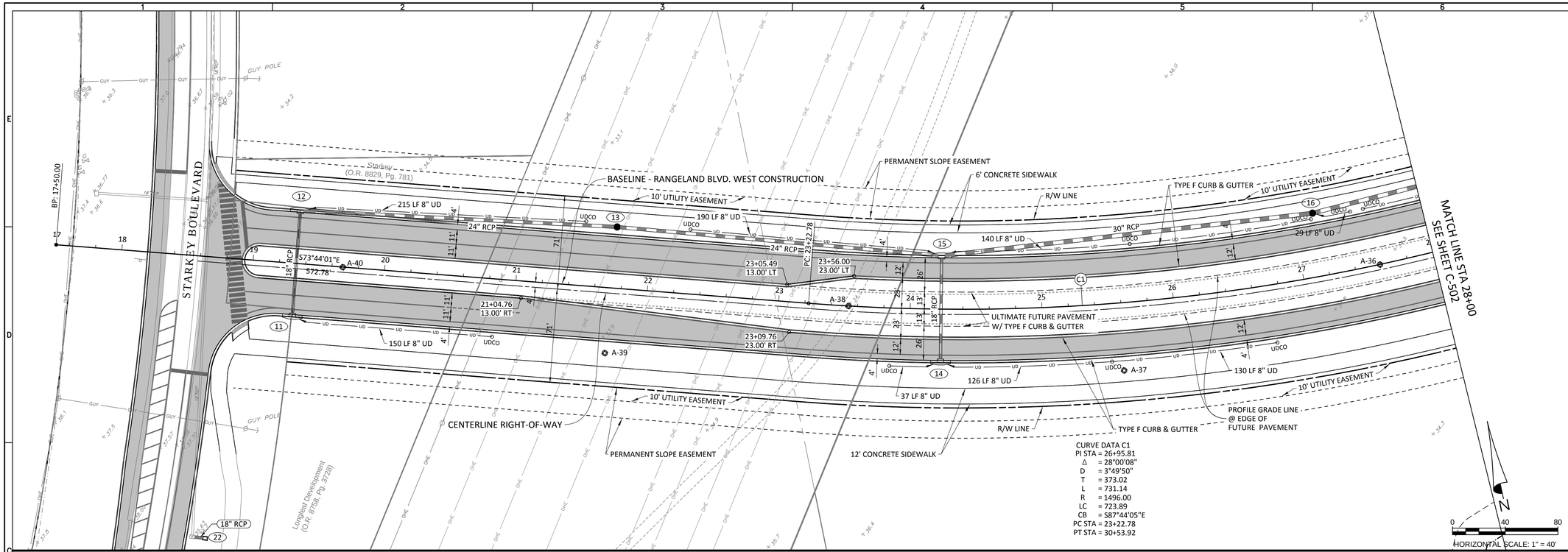

RANGELAND BOULEVARD

ELEVATIONS BASED ON:
NORTH AMERICAN VERTICAL DATUM 1988
CONVERSION:
NAVD 88 TO NGVD 29 = +0.85

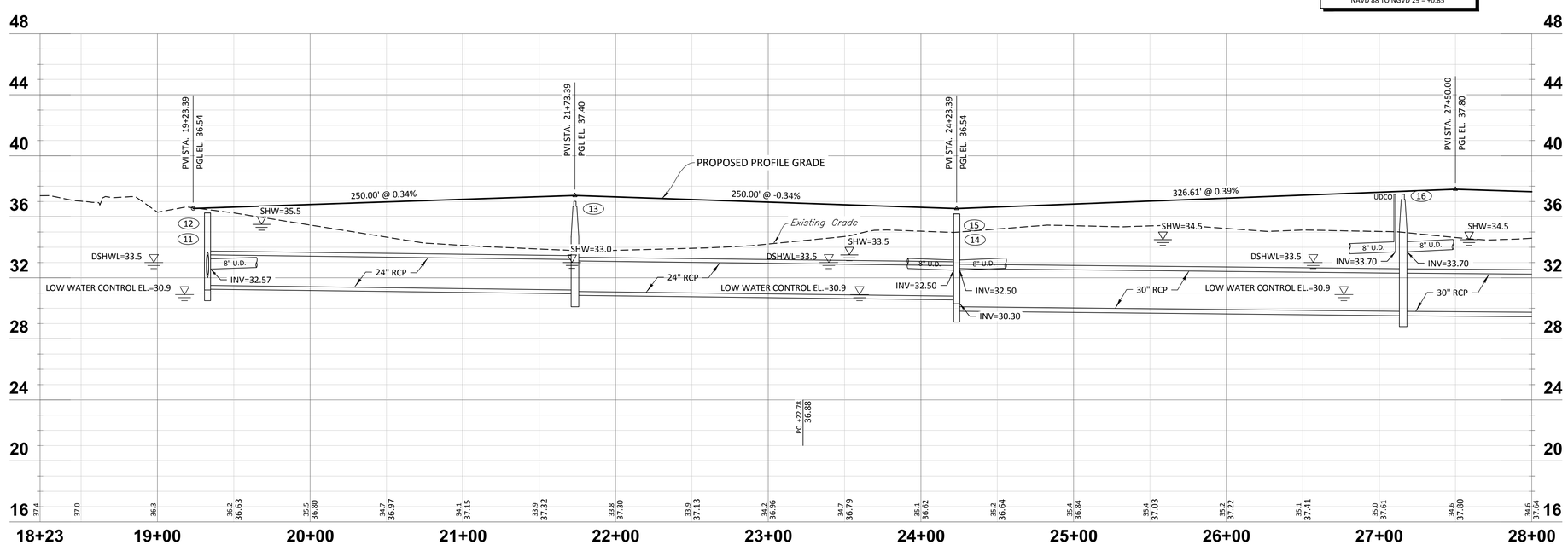

HEIDT DESIGN
Civil Engineering • Planning & GIS
Transportation Engineering
Ecological Services • Landscape Architecture
Engineering Business Certificate of Authorization No. 28782
Landscape Architecture Certificate of Authorization No. LC26000415
5806-B Breckenridge Pkwy.
Tampa, Florida 33610
Office: 813-253-5311
Fax: 813-464-7629
www.HeidtDesign.com

RANGELAND BOULEVARD
WEST EXTENSION PHASE 2

ROADWAY PLAN & PROFILE

PREPARED FOR: WS-TSR, LLC

R:\STARKEY RANCH\RANGELAND BLVD WEST EXT PHASE 2\ENGINEERING\RP DWG-C-501 2015\12\30 9:44 AM MARK JONES

DATE	DESCRIPTION
12/30/2015	INITIAL REVIEW SUBMITTAL

PROJECT NO:	TSR SR 1072
FILE:	RP
DESIGN BY:	MOORE
DRAWN BY:	JONES

FLORIDA PROFESSIONAL ENGINEER

GARY D. MILLER
DATE:
REGISTRATION NO. 52717

C-501

© COPYRIGHT 2015, HEIDT DESIGN, LLC. ALL RIGHTS RESERVED. NO DOCUMENTATION INCLUDING BUT NOT LIMITED TO DRAWINGS OR EXHIBITS MAY BE COPIED, REPRODUCED, OR DISTRIBUTED UNLESS SPECIFIC WRITTEN PERMISSION HAS BEEN OBTAINED FROM HEIDT DESIGN, LLC. IN ADVANCE. CONSENT IS HEREBY GRANTED SPECIFICALLY TO GOVERNMENTAL AGENCIES TO REPRODUCE THIS DOCUMENTATION IN COMPLIANCE WITH F.S. CHAPTER 119.

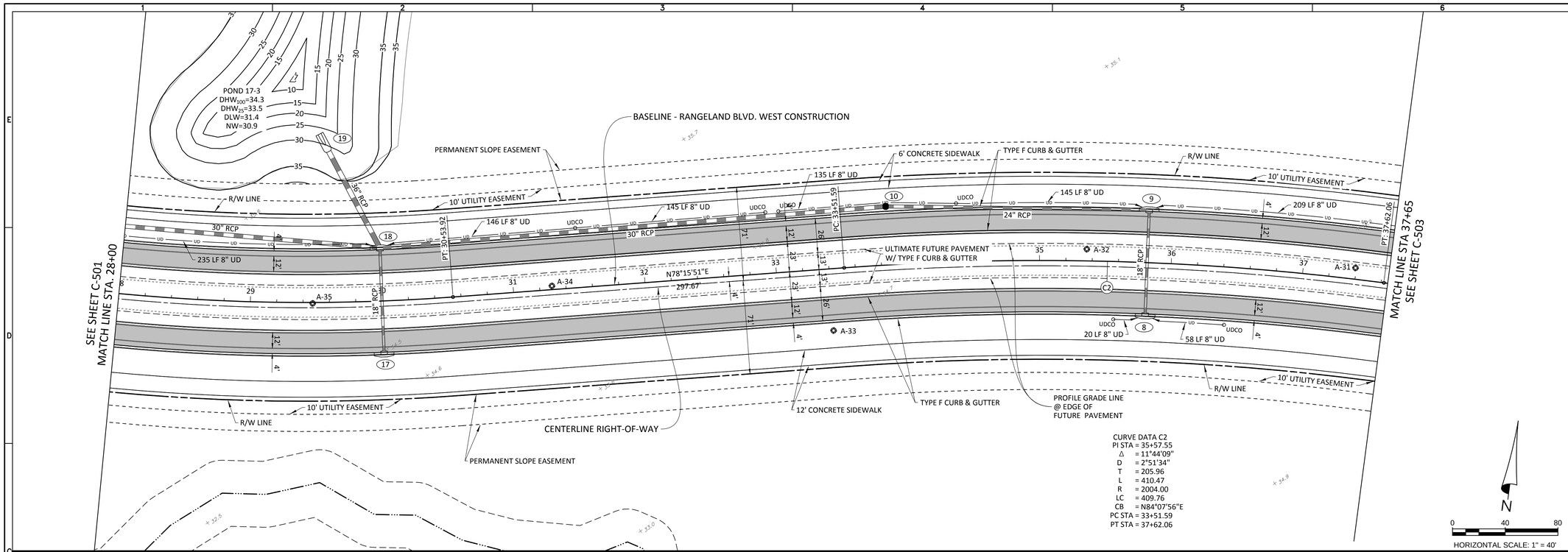

CURVE DATA C2
PI STA = 35+57.55
Δ = 11°44'09"
D = 2°51'34"
T = 205.96
L = 410.47
R = 2004.00
LC = 409.76
CB = N84°07'56"E
PC STA = 33+51.59
PT STA = 37+62.06

RANGELAND BOULEVARD

ELEVATIONS BASED ON:
NORTH AMERICAN VERTICAL DATUM 1988
CONVERSION:
NAVD 88 TO NGVD 29 = +0.85

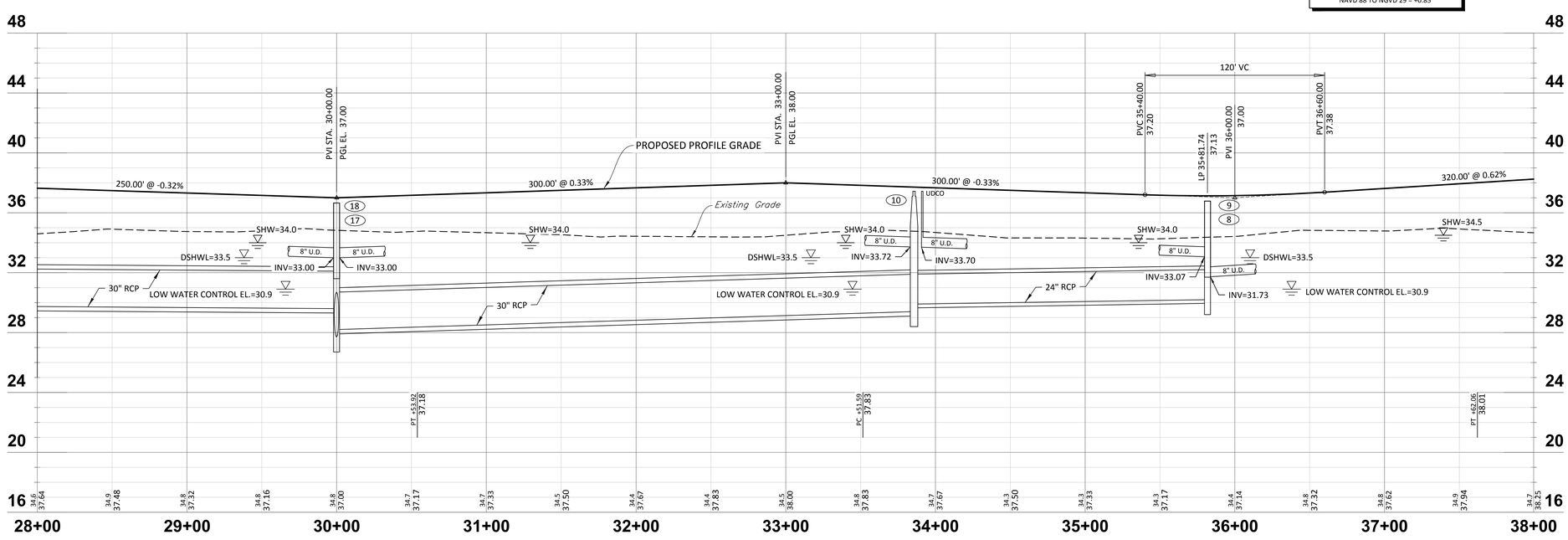

HEIDT DESIGN
Civil Engineering • Planning & GIS
Transportation Engineering
Ecological Services • Landscape Architecture
Engineering Business Certificate of Authorization No. 28782
Landscape Architecture Certificate of Authorization No. LC26000415
5806-B Breckenridge Pkwy.
Tampa, Florida 33610
Office: 813-253-5311
Fax: 813-464-7629
www.HeidtDesign.com

RANGELAND BOULEVARD
WEST EXTENSION PHASE 2

ROADWAY PLAN & PROFILE

PREPARED FOR: WS-TSR, LLC

DATE	DESCRIPTION

DATE	DESCRIPTION
12/30/2015	INITIAL REVIEW SUBMITTAL

PROJECT NO:	TSR SR 1072
FILE:	RP
DESIGN BY:	MOORE
DRAWN BY:	JONES

FLORIDA PROFESSIONAL ENGINEER

GARY D. MILLER
DATE:
REGISTRATION NO. 52717

C-502

R:\STARKEY RANCH\RANGELAND BLVD WEST EXT PHASE 2\ENGINEERING\RP DWG-C-502 2015\12\30 9:45 AM MARK JONES

© COPYRIGHT 2015, HEIDT DESIGN, LLC. ALL RIGHTS RESERVED. NO DOCUMENTATION, INCLUDING BUT NOT LIMITED TO DRAWINGS OR EXHIBITS MAY AS COPIED, REPRODUCED, OR DISTRIBUTED UNLESS SPECIFIC WRITTEN PERMISSION HAS BEEN OBTAINED FROM HEIDT DESIGN, LLC. IN ADVANCE. CONSENT IS HEREBY GRANTED SPECIFICALLY TO GOVERNMENTAL AGENCIES TO REPRODUCE THIS DOCUMENTATION IN COMPLIANCE WITH F.S. CHAPTER 119.

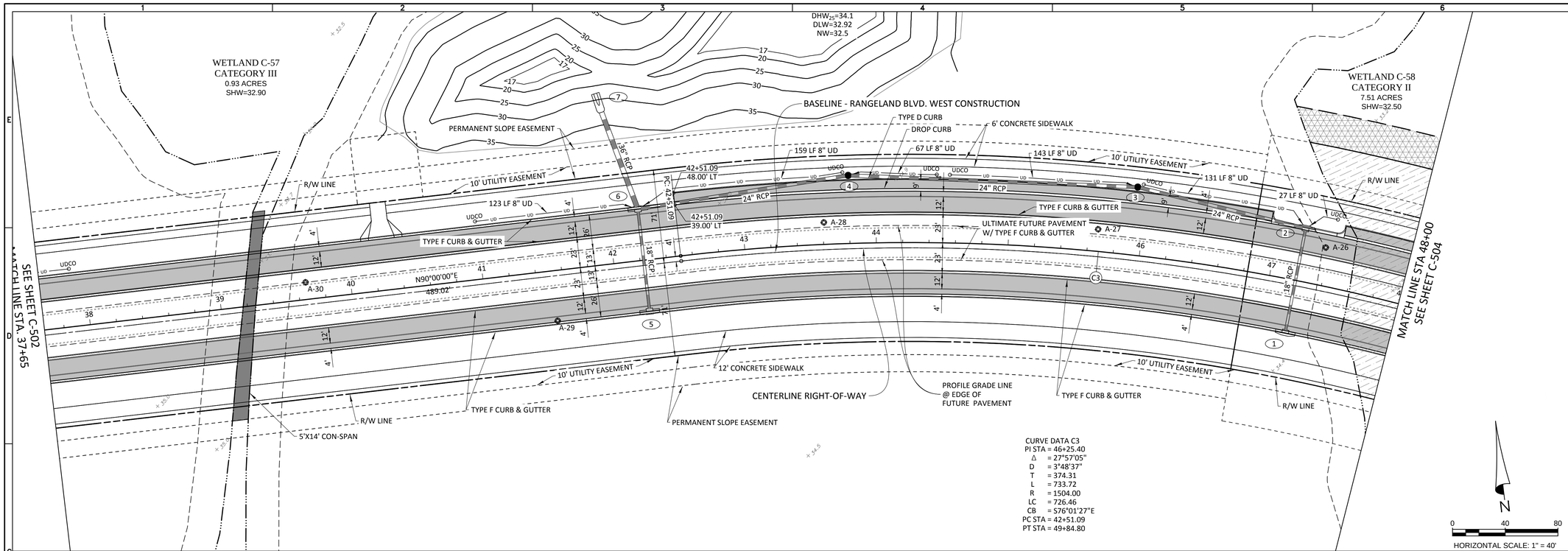

RANGELAND BOULEVARD

ELEVATIONS BASED ON:
NORTH AMERICAN VERTICAL DATUM 1988
CONVERSION:
NAVD 88 TO NGVD 29 = +0.85

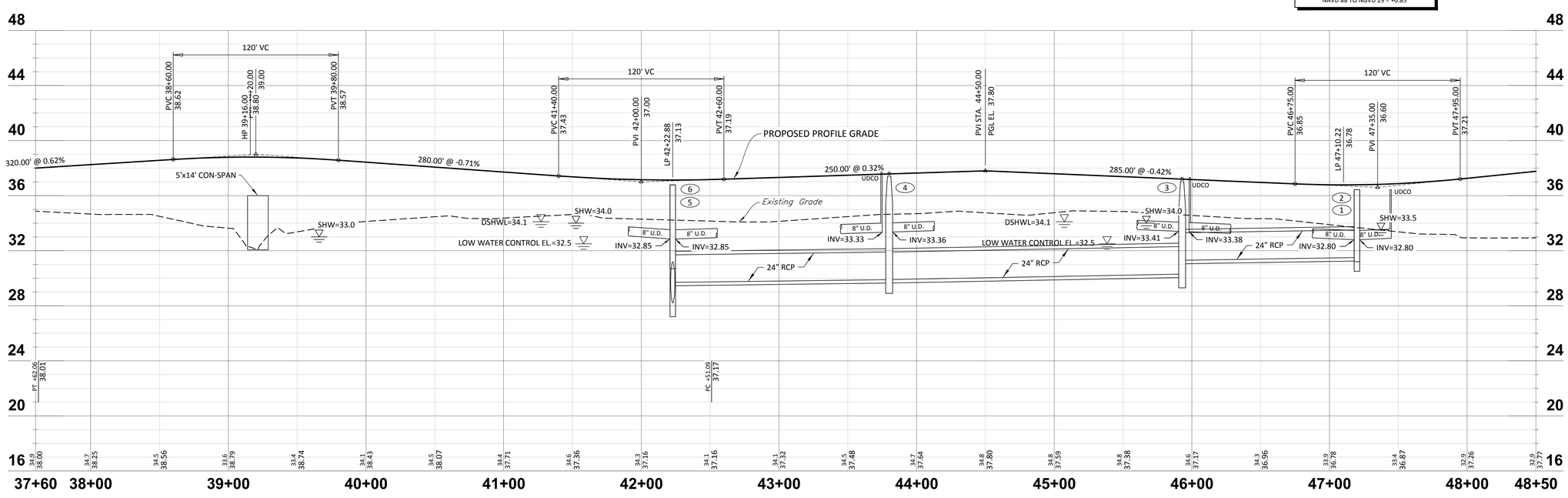

HEIDT DESIGN
Civil Engineering • Planning & GIS
Transportation Engineering
Ecological Services • Landscape Architecture
Engineering Business Certificate of Authorization No. 28782
Landscape Architecture Certificate of Authorization No. LC26000415
5806-B Breckenridge Pkwy.
Tampa, Florida 33610
Office: 813-253-5311
Fax: 813-464-7629
www.HeidtDesign.com

RANGELAND BOULEVARD
WEST EXTENSION PHASE 2
ROADWAY PLAN & PROFILE

PREPARED FOR: WS-TSR, LLC

DATE	DESCRIPTION

DATE	DESCRIPTION
12/30/2015	INITIAL REVIEW SUBMITTAL
1	

PROJECT NO: TSR SR 1072
FILE: RP
DESIGN BY: MOORE
DRAWN BY: JONES

FLORIDA PROFESSIONAL ENGINEER
GARY D. MILLER
DATE:
REGISTRATION NO. 52717

C-503

R:\STARKEY RANCH\RANGELAND BLVD WEST EXT PHASE 2\ENGINEERING\RP DWG-C-503 2015\12\30 9:45 AM MARK JONES

© COPYRIGHT 2015, HEIDT DESIGN, LLC. ALL RIGHTS RESERVED. NO DOCUMENTATION, INCLUDING BUT NOT LIMITED TO DRAWINGS OR EXHIBITS MAY BE COPIED, REPRODUCED, OR DISTRIBUTED UNLESS SPECIFIC WRITTEN PERMISSION HAS BEEN OBTAINED FROM HEIDT DESIGN, LLC. IN ADVANCE. CONSENT IS HEREBY GRANTED SPECIFICALLY TO GOVERNMENTAL AGENCIES TO REPRODUCE THIS DOCUMENTATION IN COMPLIANCE WITH F.S. CHAPTER 119.

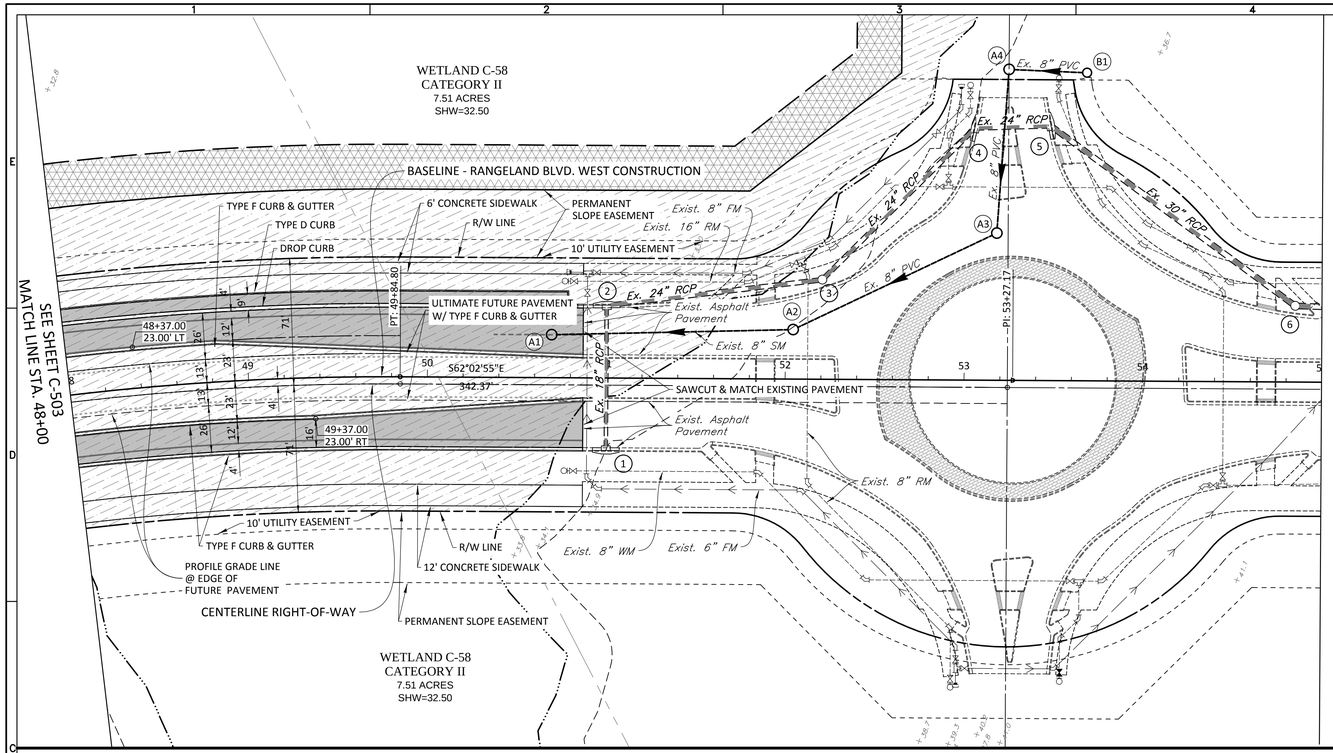

RANGELAND BOULEVARD

ELEVATIONS BASED ON:
NORTH AMERICAN VERTICAL DATUM 1988
CONVERSION:
NAVD 88 TO NGVD 29 = +0.85

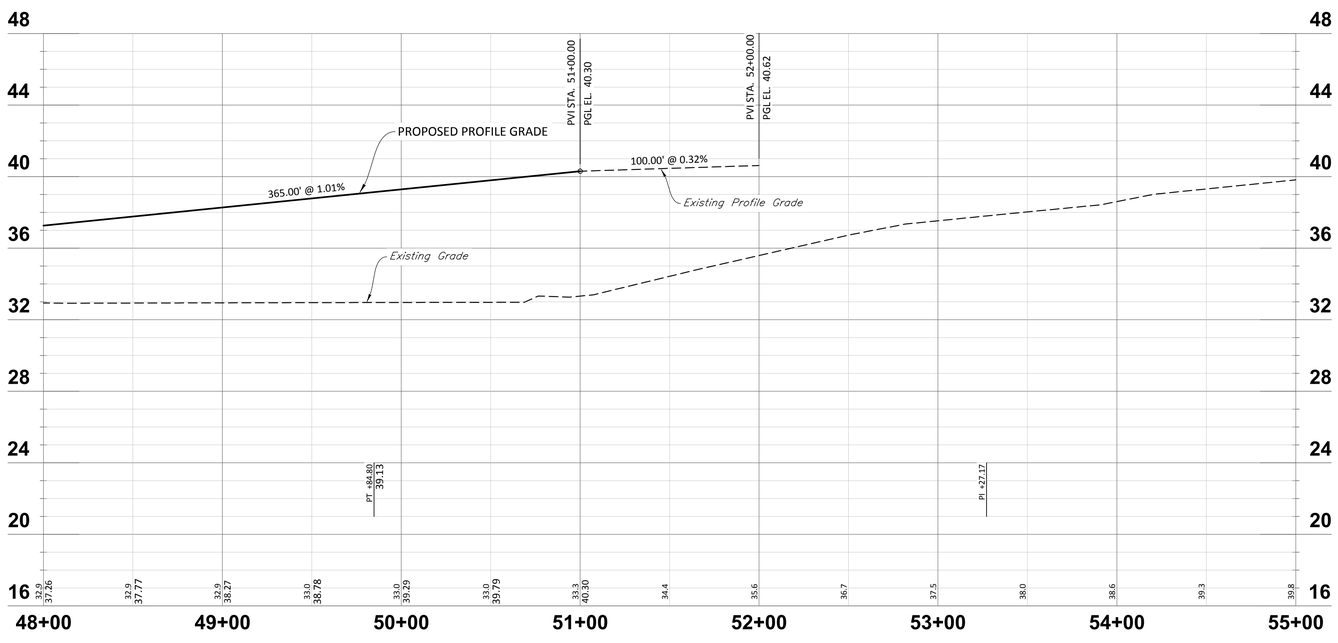

HORIZONTAL SCALE: 1" = 40'
VERTICAL SCALE: 1" = 4'

HEIDT DESIGN
Civil Engineering • Planning & GIS
Transportation Engineering
Ecological Services • Landscape Architecture
Engineering Business Certificate of Authorization No. 28782
Landscape Architecture Certificate of Authorization No. LC26000415
5806-B Breckenridge Pkwy.
Tampa, Florida 33610
Office: 813-253-5311
Fax: 813-464-7629
www.HeidtDesign.com

RANGELAND BOULEVARD
WEST EXTENSION PHASE 2

ROADWAY PLAN & PROFILE

PREPARED FOR: WS-TSR, LLC

DATE	DESCRIPTION

DATE	DESCRIPTION
12/30/2015	INITIAL REVIEW SUBMITTAL

PROJECT NO:	TSR SR 1072
FILE:	RP
DESIGN BY:	MOORE
DRAWN BY:	JONES

FLORIDA PROFESSIONAL ENGINEER

GARY D. MILLER
DATE:
REGISTRATION NO. 52717

C-504

R:\STARKEY RANCH\RANGELAND BLVD WEST EXT PHASE 2\ENGINEERING\RP DWG-C-504.2015\12\30 9:45 AM MARK JONES

© COPYRIGHT 2015, HEIDT DESIGN, LLC. ALL RIGHTS RESERVED. NO DOCUMENTATION INCLUDING BUT NOT LIMITED TO DRAWINGS OR EXHIBITS MAY BE COPIED, REPRODUCED, OR DISTRIBUTED UNLESS SPECIFIC WRITTEN PERMISSION HAS BEEN OBTAINED FROM HEIDT DESIGN, LLC. IN ADVANCE. CONSENT IS HEREBY GRANTED SPECIFICALLY TO GOVERNMENTAL AGENCIES TO REPRODUCE THIS DOCUMENTATION IN COMPLIANCE WITH F.S. CHAPTER 119.

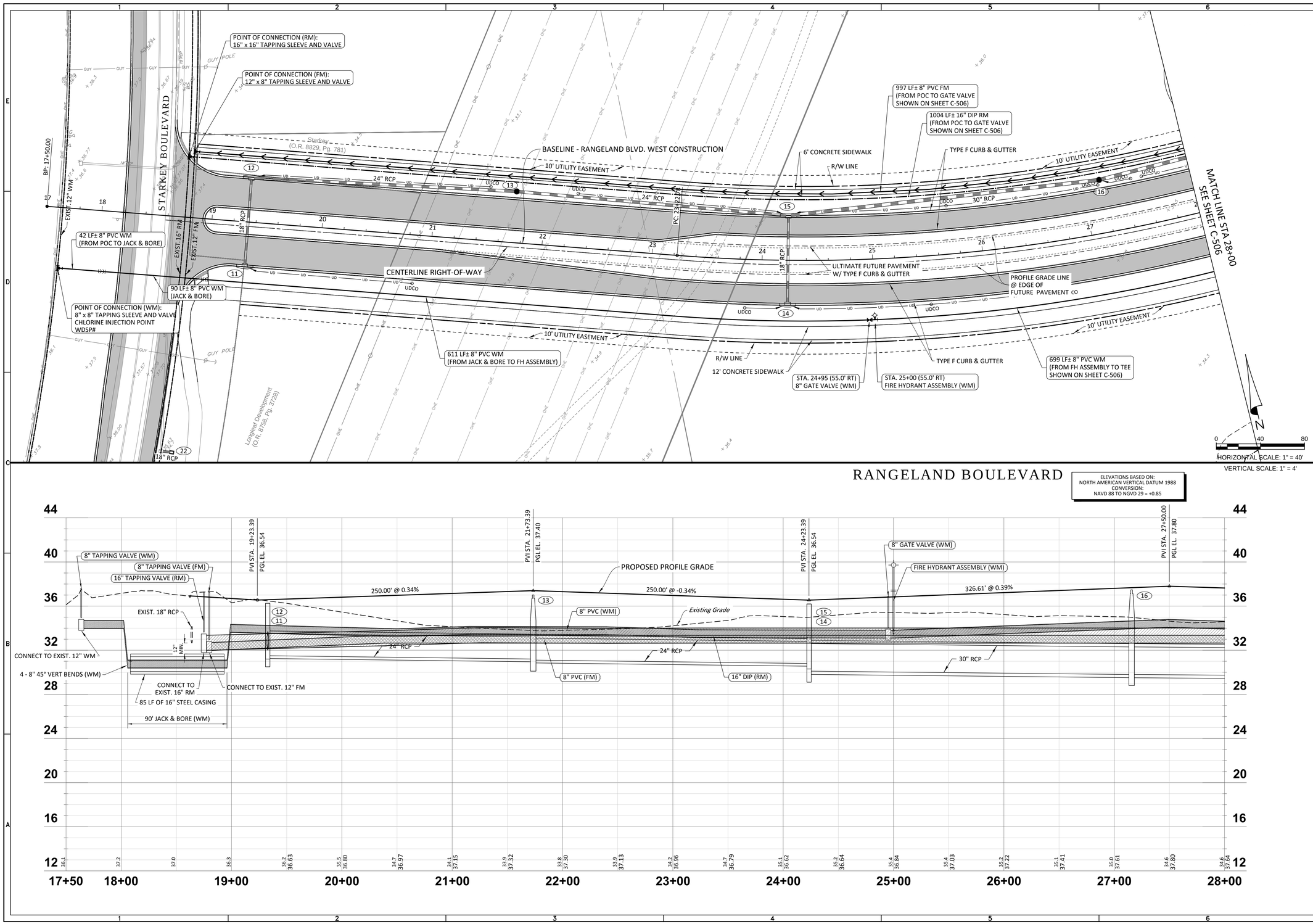

RANGELAND BOULEVARD

ELEVATIONS BASED ON:
NORTH AMERICAN VERTICAL DATUM 1988
CONVERSION:
NAVD 88 TO NGVD 29 = +0.85

HEIDT DESIGN
Civil Engineering • Planning & GIS
Transportation Engineering
Ecological Services • Landscape Architecture
5806-B Breckenridge Pkwy.
Tampa, Florida 33610
Office: 813-253-5311
Fax: 813-464-7629
www.HeidtDesign.com
Engineering Business Certificate of Authorization No. 28782
Landscape Architecture Certificate of Authorization No. LC26000415

RANGELAND BOULEVARD
WEST EXTENSION PHASE 2

UTILITY PLAN & PROFILE

PREPARED FOR: WS-TSR, LLC

DATE	DESCRIPTION

DATE	DESCRIPTION
12/30/2015	INITIAL REVIEW SUBMITTAL

PROJECT NO:	TSR SR 1072
FILE:	WSP
DESIGN BY:	MOORE
DRAWN BY:	JONES

FLORIDA PROFESSIONAL ENGINEER

GARY D. MILLER
DATE:
REGISTRATION NO. 52717

C-505

R:\STARKEY RANCH\RANGELAND BLVD WEST EXT PHASE 2\ENGINEERING\WSP DWG-C-505.2015\12\30 9:46 AM MARK JONES

© COPYRIGHT 2015, HEIDT DESIGN, LLC. ALL RIGHTS RESERVED. NO DOCUMENTATION INCLUDING BUT NOT LIMITED TO DRAWINGS OR EXHIBITS MAY BE COPIED, REPRODUCED, OR DISTRIBUTED UNLESS SPECIFIC WRITTEN PERMISSION HAS BEEN OBTAINED FROM HEIDT DESIGN, LLC. IN ADVANCE. CONSENT IS HEREBY GRANTED SPECIFICALLY TO GOVERNMENTAL AGENCIES TO REPRODUCE THIS DOCUMENTATION IN COMPLIANCE WITH F.S. CHAPTER 119.

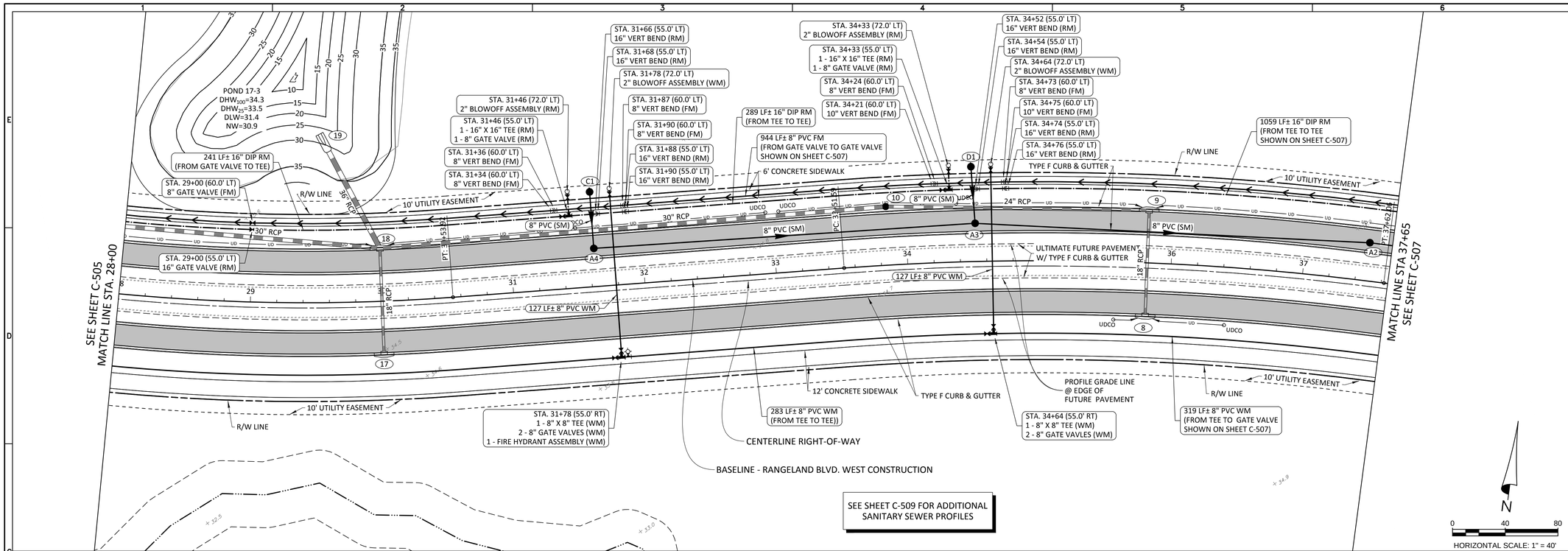

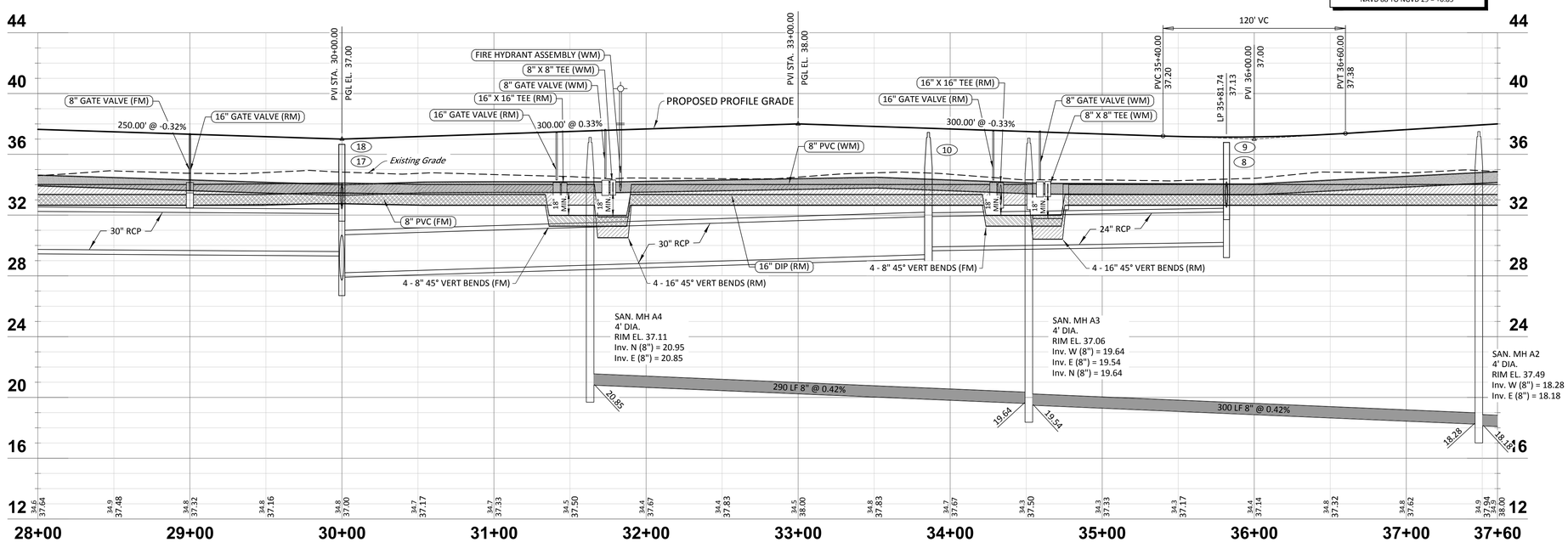

HEIDT DESIGN
Civil Engineering • Planning & GIS
Transportation Engineering
Ecological Services • Landscape Architecture
Engineering Business Certificate of Authorization No. 28782
Landscape Architecture Certificate of Authorization No. LC26000415
5806-B Breckenridge Pkwy.
Tampa, Florida 33610
Office: 813-253-5311
Fax: 813-464-7629
www.HeidtDesign.com

RANGELAND BOULEVARD WEST EXTENSION PHASE 2

UTILITY PLAN & PROFILE

PREPARED FOR: WS-TSR, LLC

DATE	DESCRIPTION

DATE	DESCRIPTION
12/30/2015	INITIAL REVIEW SUBMITTAL

PROJECT NO:	TSR SR 1072
FILE:	WSP
DESIGN BY:	MOORE
DRAWN BY:	JONES

FLORIDA PROFESSIONAL ENGINEER

GARY D. MILLER
DATE:
REGISTRATION NO. 52717

C-506

R:\STARKEY RANCH\RANGELAND BLVD WEST EXT PHASE 2\ENGINEERING\WSP DWG-C-506 2015\12\30 9:46 AM MARK JONES

© COPYRIGHT 2015, HEIDT DESIGN, LLC. ALL RIGHTS RESERVED. NO DOCUMENTATION, INCLUDING BUT NOT LIMITED TO DRAWINGS OR EXHIBITS MAY BE COPIED, REPRODUCED, OR DISTRIBUTED UNLESS SPECIFIC WRITTEN PERMISSION HAS BEEN OBTAINED FROM HEIDT DESIGN, LLC. IN ADVANCE. CONSENT IS HEREBY GRANTED SPECIFICALLY TO GOVERNMENTAL AGENCIES TO REPRODUCE THIS DOCUMENTATION IN COMPLIANCE WITH F.S. CHAPTER 119.

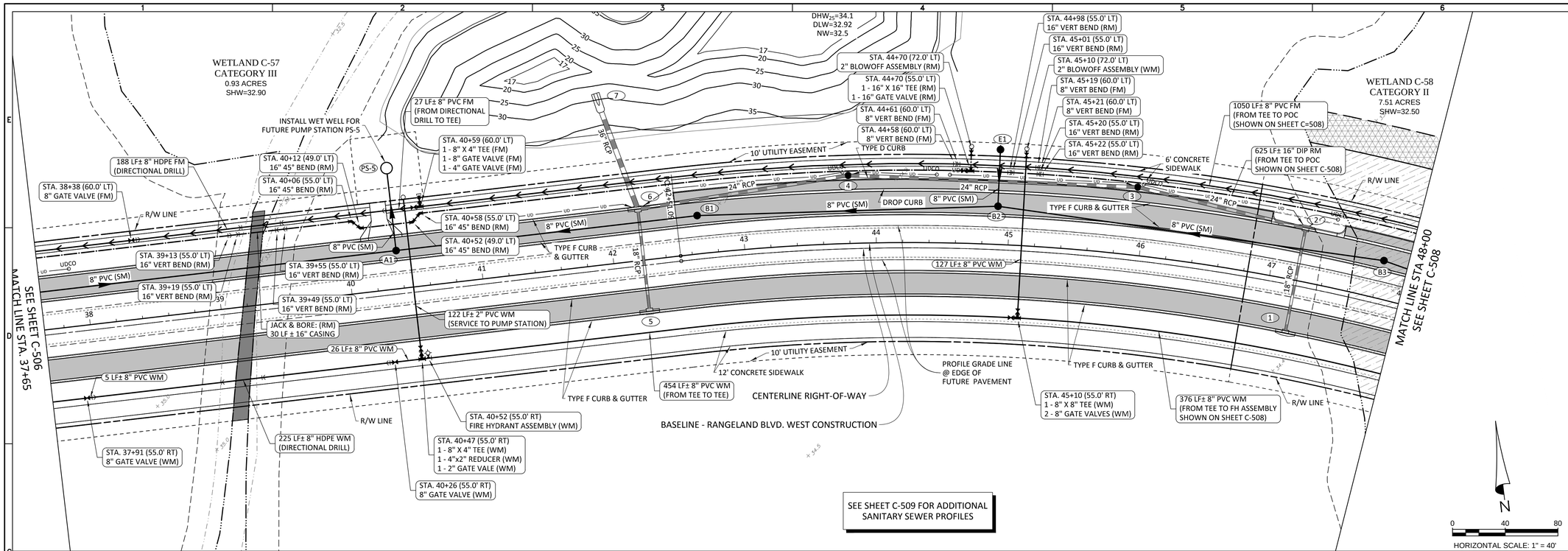

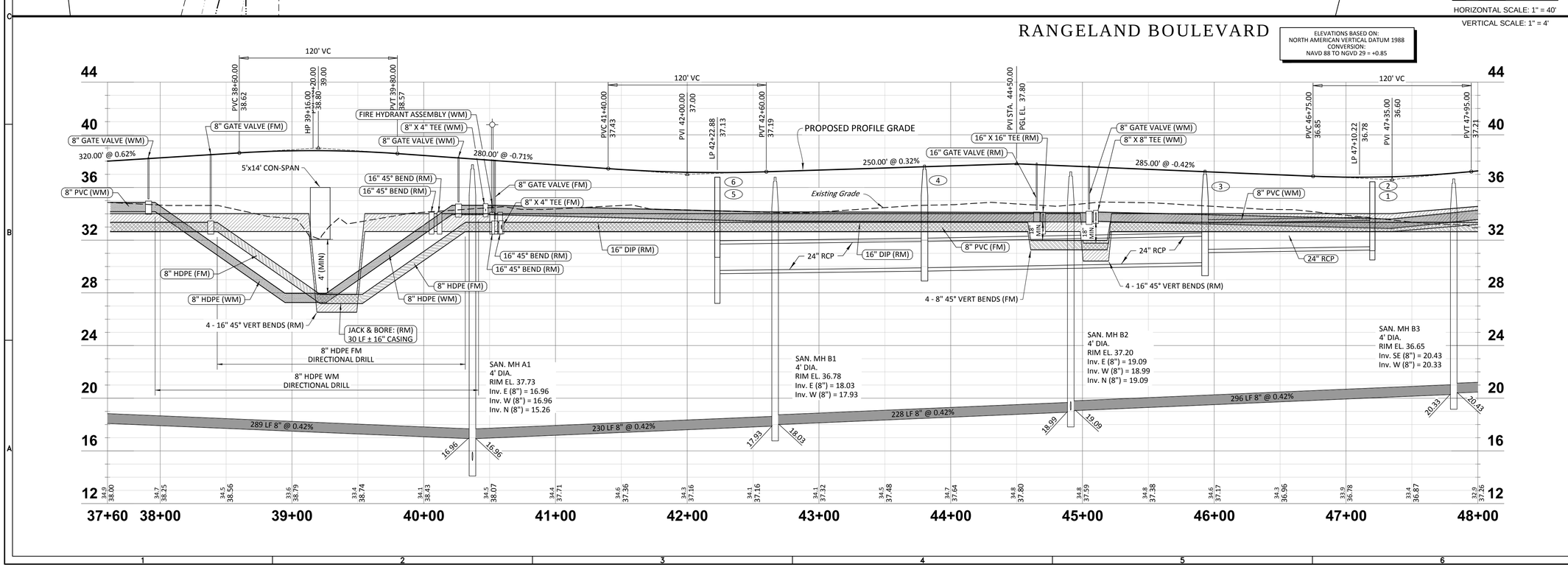

HEIDT DESIGN
Civil Engineering • Planning & GIS
Transportation Engineering
Ecological Services • Landscape Architecture
Engineering Business Certificate of Authorization No. 28782
Landscape Architecture Certificate of Authorization No. LC26000415
5806-B Breckenridge Pkwy.
Tampa, Florida 33610
Office: 813-253-5311
Fax: 813-464-7629
www.HeidtDesign.com

RANGELAND BOULEVARD WEST EXTENSION PHASE 2

UTILITY PLAN & PROFILE

PREPARED FOR: WS-TSR, LLC

DATE	DESCRIPTION

DATE	DESCRIPTION
12/30/2015	INITIAL REVIEW SUBMITTAL
1	

PROJECT NO: TSR SR 1072
FILE: WSP
DESIGN BY: MOORE
DRAWN BY: JONES

FLORIDA PROFESSIONAL ENGINEER

GARY D. MILLER
DATE:
REGISTRATION NO. 52717

C-507

R:\STARKEY RANCH\RANGELAND BLVD WEST EXT PHASE 2\ENGINEERING\WSP DWG-C-507 2015\12\30 9:46 AM MARK JONES

© COPYRIGHT 2015, HEIDT DESIGN, LLC. ALL RIGHTS RESERVED. NO DOCUMENTATION (INCLUDING BUT NOT LIMITED TO DRAWINGS OR EXHIBITS) MAY BE COPIED, REPRODUCED, OR DISTRIBUTED UNLESS SPECIFIC WRITTEN PERMISSION HAS BEEN OBTAINED FROM HEIDT DESIGN, LLC. IN ADVANCE. CONSENT IS HEREBY GRANTED SPECIFICALLY TO GOVERNMENTAL AGENCIES TO REPRODUCE THIS DOCUMENTATION IN COMPLIANCE WITH F.S. CHAPTER 119.

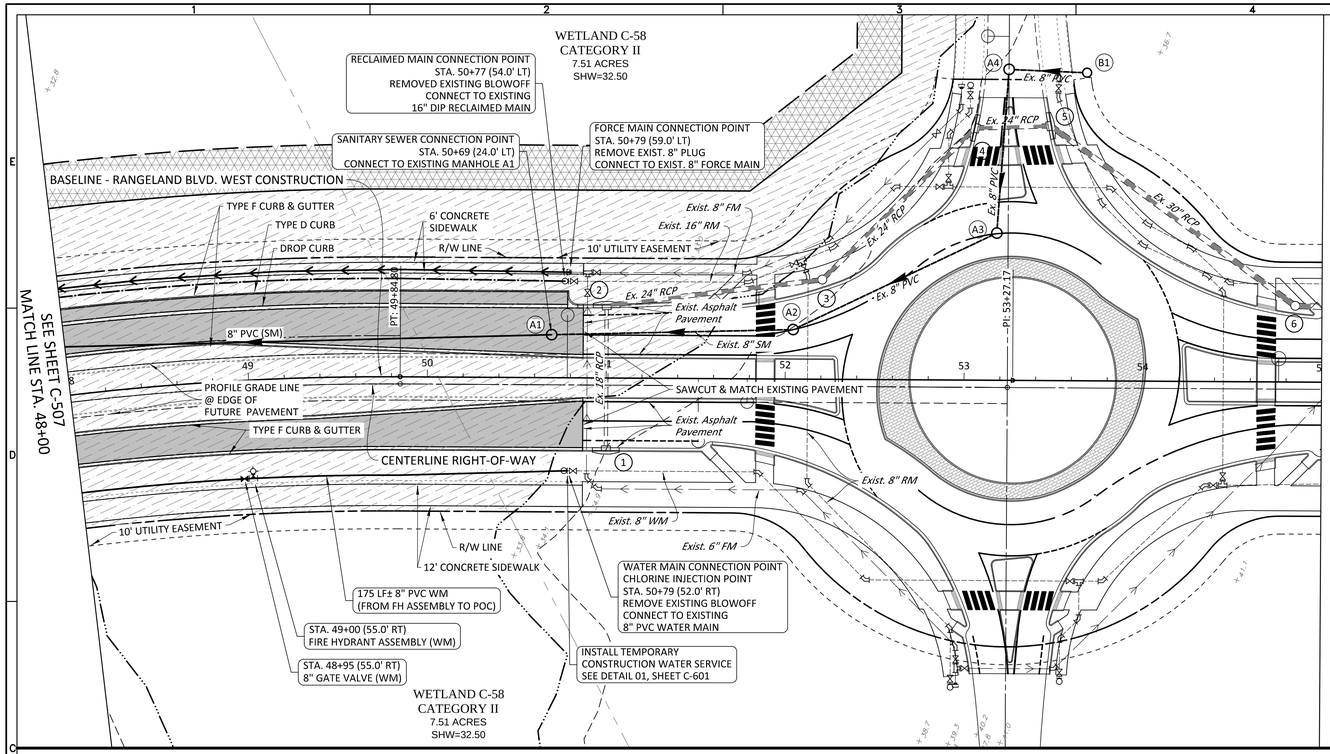

0 40 80

HORIZONTAL SCALE: 1" = 40'

VERTICAL SCALE: 1" = 4'

RANGELAND BOULEVARD

ELEVATIONS BASED ON:
NORTH AMERICAN VERTICAL DATUM 1988
CONVERSION:
NAVD 88 TO NGVD 29 = +0.85

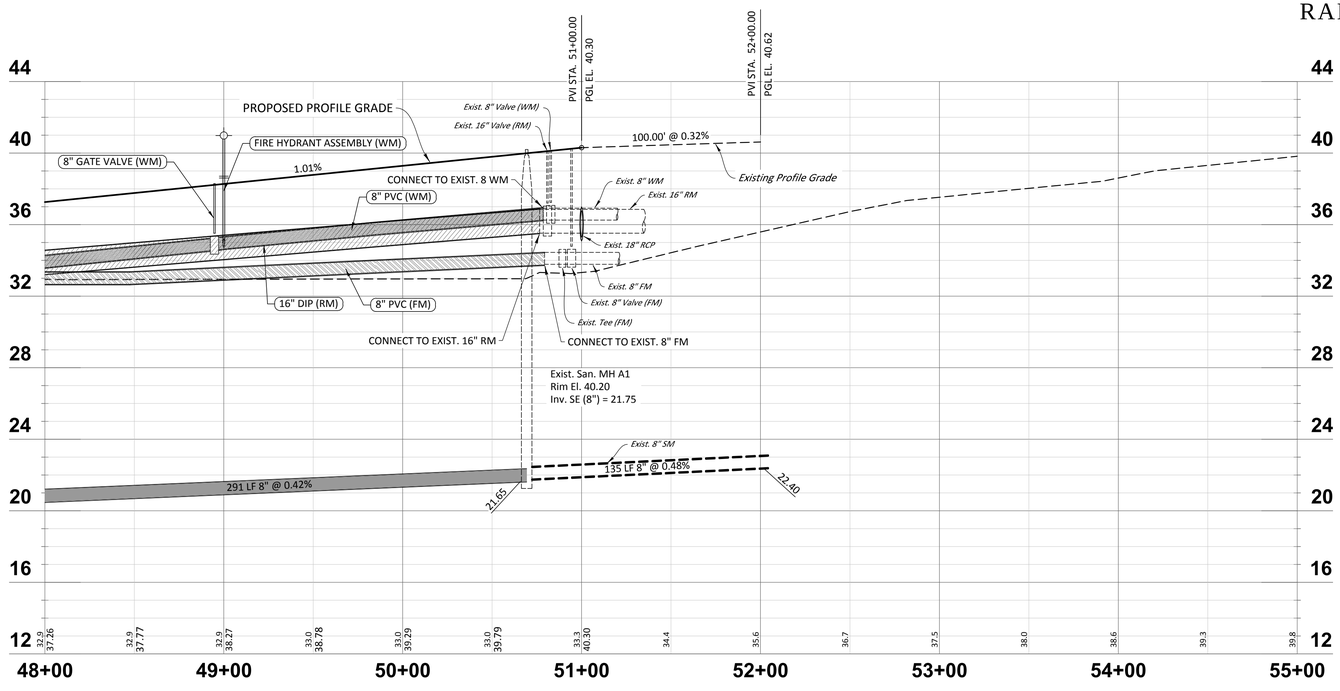

HEIDT DESIGN
Civil Engineering • Planning & GIS
Transportation Engineering
Ecological Services • Landscape Architecture
Engineering Business Certificate of Authorization No. 28782
Landscape Architecture Certificate of Authorization No. LC26000415
5806-B Breckenridge Pkwy.
Tampa, Florida 33610
Office: 813-253-5311
Fax: 813-464-7629
www.HeidtDesign.com

RANGELAND BOULEVARD WEST EXTENSION PHASE 2

UTILITY PLAN & PROFILE

PREPARED FOR: WS-TSR, LLC

DATE	DESCRIPTION

DATE	DESCRIPTION
12/30/2015	INITIAL REVIEW SUBMITTAL
1	

PROJECT NO:	TSR SR 1072
FILE:	WSP
DESIGN BY:	MOORE
DRAWN BY:	JONES

FLORIDA PROFESSIONAL ENGINEER

GARY D. MILLER
DATE:
REGISTRATION NO. 52717

C-508

R:\STARKEY RANCH\RANGELAND BLVD WEST EXT PHASE 2\ENGINEERING\WSP DWG-C-508 2015\12\30 9:46 AM MARK JONES

© COPYRIGHT 2015, HEIDT DESIGN, LLC. ALL RIGHTS RESERVED. NO DOCUMENTATION INCLUDING BUT NOT LIMITED TO DRAWINGS OR EXHIBITS MAY BE COPIED, REPRODUCED, OR DISTRIBUTED UNLESS SPECIFIC WRITTEN PERMISSION HAS BEEN OBTAINED FROM HEIDT DESIGN, LLC. IN ADVANCE. CONSENT IS HEREBY GRANTED SPECIFICALLY TO GOVERNMENTAL AGENCIES TO REPRODUCE THIS DOCUMENTATION IN COMPLIANCE WITH F.S. CHAPTER 119.

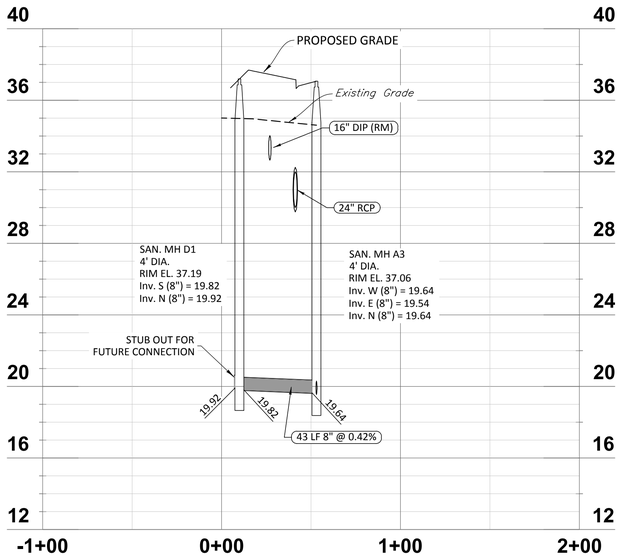

SEWER LINE D1 TO A3

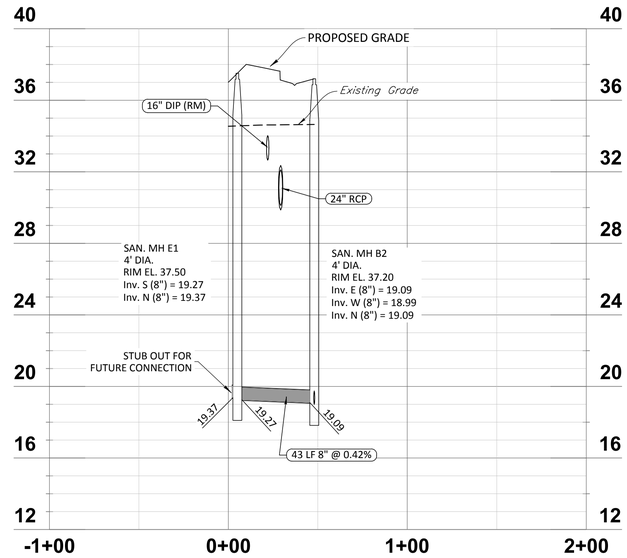

SEWER LINE E1 TO B2

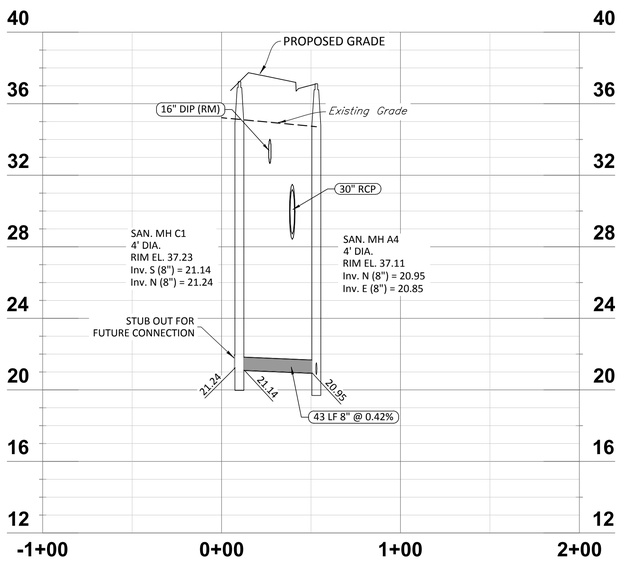

SEWER LINE C1 TO A4

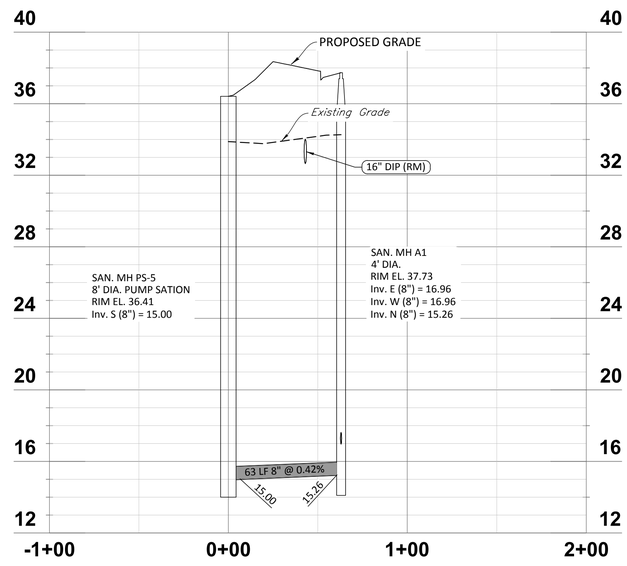

SEWER LINE A1 TO PS-5

0 40 80

HORIZONTAL SCALE: 1" = 40'

VERTICAL SCALE: 1" = 4'

ELEVATIONS BASED ON:
NORTH AMERICAN VERTICAL DATUM 1988
CONVERSION:
NAVD 88 TO NGVD 29 = +0.85

HEIDT DESIGN
Civil Engineering • Planning & GIS
Transportation Engineering
Ecological Services • Landscape Architecture
Engineering Business Certificate of Authorization No. 28782
Landscape Architecture Certificate of Authorization No. LC26000415
5806-B Breckenridge Pkwy.
Tampa, Florida 33610
Office: 813-253-5311
Fax: 813-464-7629
www.HeidtDesign.com

R:\STARKEY RANCH\RANGELAND BLVD WEST EXT PHASE 2\ENGINEERING\SP DWG-C-509.2015\12\30\9:47 AM MARK JONES

RANGELAND BOULEVARD
WEST EXTENSION PHASE 2

SANITARY SEWER PROFILES

PREPARED FOR: WS-TSR, LLC

DATE	DESCRIPTION

DATE	DESCRIPTION
12/30/2015	INITIAL REVIEW SUBMITTAL
1	

PROJECT NO:	TSR SR 1072
FILE:	SP
DESIGN BY:	MOORE
DRAWN BY:	JONES

FLORIDA PROFESSIONAL ENGINEER

GARY D. MILLER
DATE:
REGISTRATION NO. 52717

C-509

© COPYRIGHT 2015, HEIDT DESIGN, LLC. ALL RIGHTS RESERVED. NO DOCUMENTATION, INCLUDING BUT NOT LIMITED TO DRAWINGS OR EXHIBITS MAY BE COPIED, REPRODUCED, OR DISTRIBUTED UNLESS SPECIFIC WRITTEN PERMISSION HAS BEEN OBTAINED FROM HEIDT DESIGN, LLC. IN ADVANCE. CONSENT IS HEREBY GRANTED SPECIFICALLY TO GOVERNMENTAL AGENCIES TO REPRODUCE THIS DOCUMENTATION IN COMPLIANCE WITH F.S. CHAPTER 119.

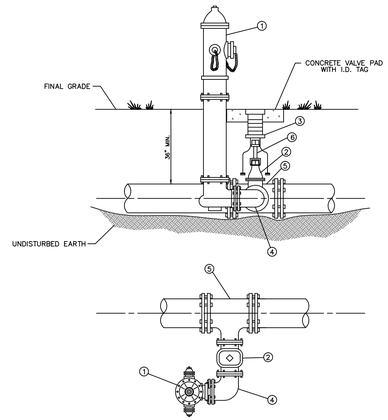

MATERIALS		
ITEM	QUANT.	DESCRIPTION
1	1	HYDRANT, FIRE (5 1/4" VALVE MIN.), PAINTED YELLOW
2	1	6" VALVE, GATE, MJ RESILIENT WEDGE
3	1	BOX, VALVE SLIP TYPE
4	1	6" BEND, ANCHORING, D.I.
5	1	TEE, ANCHORING, MJ
6	*	VALVE EXTENSION ROD, AS NECESSARY (3' MAX. BELOW GRADE)

CREATED 02/24/03
REVISED

FIRE HYDRANT PARALLEL TO THE MAIN

PASCO COUNTY UTILITIES

PROVIDED FOR INFORMATIONAL PURPOSES ONLY. NO MODIFICATIONS WITHOUT WRITTEN PCU APPROVAL

DETAIL 25

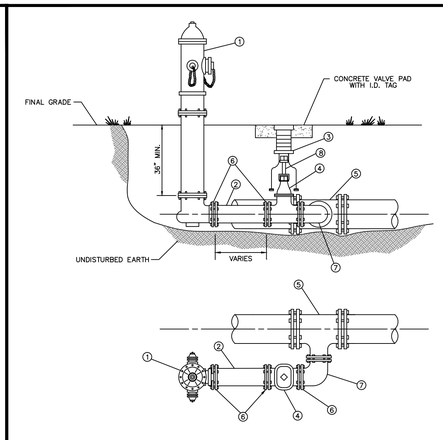

MATERIALS		
ITEM	QUANT.	DESCRIPTION
1	1	HYDRANT, FIRE (5 1/4" VALVE MIN.), PAINTED YELLOW
2	*	6" PIPE, P.V.C. (DR-18)
3	1	BOX, VALVE SLIP TYPE
4	1	6" VALVE, GATE, M.J. RESILIENT WEDGE
5	1	TEE, ANCHORING, M.J.
6	*	6" RESTRAINER GLAND (MEGALUG)
7	1	BEND, ANCHORING, D.I.
8	*	VALVE EXTENSION ROD, AS NECESSARY (3' MAX. BELOW GRADE)

CREATED 02/24/03
REVISED

FIRE HYDRANT PARALLEL TO THE MAIN

PASCO COUNTY UTILITIES

PROVIDED FOR INFORMATIONAL PURPOSES ONLY. NO MODIFICATIONS WITHOUT WRITTEN PCU APPROVAL

DETAIL 26

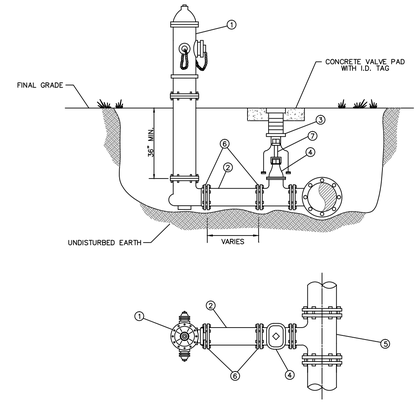

MATERIALS		
ITEM	QUANT.	DESCRIPTION
1	1	HYDRANT, FIRE (5 1/4" VALVE MIN.), PAINTED YELLOW
2	*	6" PIPE, P.V.C. (DR-18)
3	1	BOX, VALVE SLIP TYPE
4	1	6" VALVE, GATE, M.J. RESILIENT WEDGE
5	1	TEE, ANCHORING, M.J.
6	*	6" RESTRAINER GLAND (MEGALUG)
7	*	VALVE EXTENSION ROD, AS NECESSARY (3' MAX. BELOW GRADE)

CREATED 02/24/03
REVISED

FIRE HYDRANT PERPENDICULAR TO THE MAIN

PASCO COUNTY UTILITIES

PROVIDED FOR INFORMATIONAL PURPOSES ONLY. NO MODIFICATIONS WITHOUT WRITTEN PCU APPROVAL

DETAIL 27

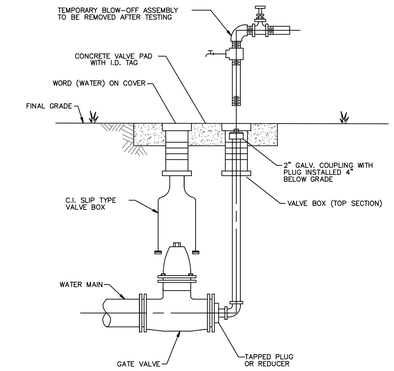

NOTES:
- MECHANICAL JOINTS/UNDERGROUND PIPING SHALL BE RESTRAINED AS SPECIFIED IN JOINT RESTRAINT TABLE (DETAIL 46)
- VALVE EXTENSION ROD SHALL BE UTILIZED, AS NECESSARY, SO THAT VALVE OPERATING NUT IS A MAXIMUM OF 3' BELOW GRADE.

CREATED 02/24/03
REVISED

PERMANENT BLOW-OFF DETAIL

PASCO COUNTY UTILITIES

PROVIDED FOR INFORMATIONAL PURPOSES ONLY. NO MODIFICATIONS WITHOUT WRITTEN PCU APPROVAL

DETAIL 28

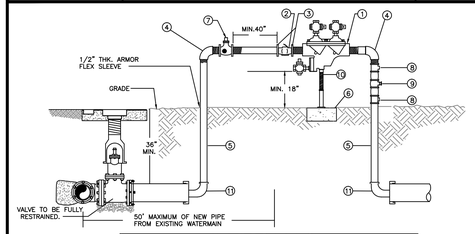

MATERIALS		
ITEM	QUANT.	DESCRIPTION
1	1	2" BACKFLOW PREVENTER ASSEMBLY, REDUCED PRESSURE ZONE
2	1	2" METER FURNISHED BY PASCO COUNTY UTILITIES
3	2	BRASS-METER FLANGES OR ADAPTORS
4	2	2" ELBOWS - GALV. 90°
5	2	2" RISER - GALV.
6	*	CONCRETE SLAB
7	1	2" VALVE - BRASS OR S.S.
8	2	TEE/ VALVES - BRASS OR S.S.
9	1	2" GATE VALVE - BRASS OR S.S.
10	1	PIPE STAND (SUPPORT)
11	2	M.J. CAP WITH 2" TAP

NOTE:
- CONTRACTOR/CUSTOMER SHALL APPLY AT PASCO COUNTY UTILITIES CUSTOMER SERVICE FOR TEMPORARY WATER SERVICE AT LEAST THREE DAYS PRIOR TO REQUIRED SERVICE DATE.
- THE METER WILL BE FURNISHED, INSTALLED AND INITIAL READING TAKEN BY PASCO COUNTY UTILITIES. ALL FITTINGS, PIPING, VALVES AND MATERIALS INCLUDING THE PASCO COUNTY APPROVED REDUCED PRESSURE BACKFLOW PREVENTION DEVICE SHALL BE FURNISHED AND INSTALLED BY THE CONTRACTOR/CUSTOMER.
- CONTRACTOR/CUSTOMER FURNISHED REDUCED PRESSURE BACKFLOW PREVENTION DEVICE MUST BE INSTALLED BEFORE THE METER IS INSTALLED BY PASCO COUNTY UTILITIES. THE APPROVED BACKFLOW PREVENTION DEVICE SHALL BE TESTED AND CERTIFIED BY PASCO COUNTY UTILITIES CERTIFIED BACKFLOW PREVENTION TECHNICIAN AT TIME OF METER INSTALLATION.
- CONTRACTOR/CUSTOMER SHALL PROTECT THE JUMPER/METER ASSEMBLY FROM DAMAGE.
- CONTRACTOR/CUSTOMER IS RESPONSIBLE FOR BACTERIOLOGICAL TESTING AFTER CONNECTION OF TEMPORARY WATER SERVICE.
- TEMPORARY CONSTRUCTION JUMPER/METER ASSEMBLY SHALL NOT BE REMOVED UNTIL SYSTEM IS ACCEPTED AND DEPARTMENT OF HEALTH CERTIFICATION AND CLEARANCE FOR SERVICE FORM HAS BEEN RECEIVED BY PASCO COUNTY UTILITIES.
- WHEN THE NEW SYSTEM IS ACCEPTED AND THE FINAL METER READING TAKEN BY PASCO COUNTY, THE TEMPORARY CONSTRUCTION JUMPER/METER ASSEMBLY MUST BE COMPLETELY REMOVED FROM M.J CAP TO M.J. CAP AND A NEW WATER MAIN IS TO BE CHLORINATED AND INSTALLED COMPLETING THE FINAL CONNECTION.
- BY APPLYING FOR SERVICE, CONTRACTOR/CUSTOMER AGREES TO TAKE WATER SERVICE FROM PASCO COUNTY UTILITIES IN ACCORDANCE WITH THE APPROPRIATE RATE SCHEDULE AND IN ACCORDANCE WITH PASCO COUNTY UTILITIES RULES AND REGULATION.

CREATED 11/18/05
REVISED 05/30/06

TEMPORARY CONSTRUCTION WATER SERVICE

PASCO COUNTY UTILITIES

PROVIDED FOR INFORMATIONAL PURPOSES ONLY. NO MODIFICATIONS WITHOUT WRITTEN PCU APPROVAL

DETAIL 01

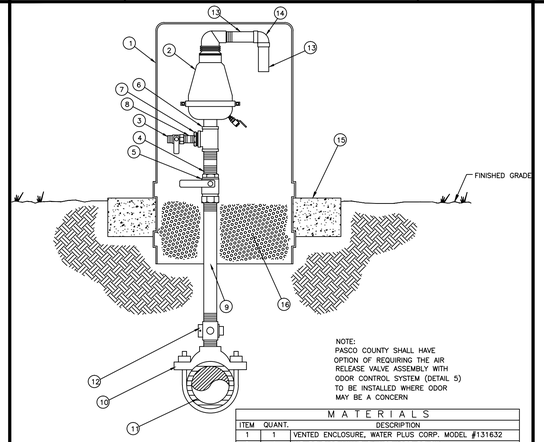

NOTE:
PASCO COUNTY SHALL HAVE OPTION OF REQUIRING THE AIR RELEASE VALVE ASSEMBLY WITH ODOR CONTROL SYSTEM (DETAIL 5) TO BE INSTALLED WHERE ODOR MAY BE A CONCERN

NOTE:

VENTED ENCLOSURE TO BE COLOR CODED AS FOLLOWS:

WATER MAIN - BLUE
FORCE MAIN - GREEN
REUSE MAIN - PURPLE

MATERIALS		
ITEM	QUANT.	DESCRIPTION
1	1	VENTED ENCLOSURE, WATER PLUS CORP. MODEL #131632
2	1	AIR RELEASE VALVE 2" NPT (SEE BELOW)
		SEWER AIR RELEASE VALVES SHALL BE ARI MODEL D-025
		WATER AIR RELEASE VALVES SHALL BE VALMATIC OR EQUAL
3	1	1" CURB STOP, S.S.
4	1	2" x 4" NIPPLE, S.S.
5	1	2" BALL VALVE, S.S.
6	1	2" TEE, S.S.
7	1	2" X 1" REDUCER, S.S.
8	1	1" SHORT NIPPLE, S.S.
9	1	2" PIPE, S.S. LENGTH AS REQUIRED
10	1	2" DOUBLE STRAP TAPPING SADDLE, S.S.
11	1	4" & LARGER PIPE, D.I. OR PVC (DR-18)
12	1	2" CORPORATION BRASS
13	2	1-1/2" PIPE, PVC, LENGTH AS REQUIRED
14	1	1-1/2" x 90° ELBOW, PVC
15	1	CONCRETE SLAB AROUND ENCLOSURE
16	1	#57 WHITE ROCK

CREATED 02/24/03
REVISED

STANDARD AIR RELEASE VALVE ASSEMBLY (VERTICAL PIPE LAYOUT)

PASCO COUNTY UTILITIES

PROVIDED FOR INFORMATIONAL PURPOSES ONLY. NO MODIFICATIONS WITHOUT WRITTEN PCU APPROVAL

DETAIL 5

PIPE RESTRAINT LENGTHS IN FEET COMMON FITTINGS

WATER MAINS - TEST PRESSURE 150 PSI

PIPE SIZE	FITTING TYPE 11-1/4°	22-1/2°	45°	90°	DEAD END
4"	2'	4'	8'	20'	45'
6"	3'	6'	12'	28'	63'
8"	4'	7'	15'	36'	82'
10"	4'	9'	18'	43'	98'
12"	5'	10'	21'	50'	116'
16"	6'	13'	26'	63'	148'
20"	7'	15'	31'	76'	179'
24"	9'	17'	36'	87'	208'

FORCE MAINS - TEST PRESSURE 100 PSI

PIPE SIZE	FITTING TYPE 11-1/4°	22-1/2°	45°	90°	DEAD END
4"	1'	3'	6'	13'	30'
6"	2'	4'	8'	19'	42'
8"	2'	5'	10'	24'	55'
10"	3'	6'	12'	29'	66'
12"	3'	7'	14'	34'	77'
16"	4'	8'	18'	42'	99'
20"	5'	10'	21'	50'	119'
24"	6'	11'	24'	58'	139'

RESTRAINT LENGTHS ARE MEASURED FROM THE CENTER LINE OF THE FITTING ALONG THE PIPE IN BOTH DIRECTIONS (EXCEPT DEAD ENDS).

CREATED 02/24/03
REVISED

RESTRAINED JOINT TABLE COMMON FITTINGS

PASCO COUNTY UTILITIES

PROVIDED FOR INFORMATIONAL PURPOSES ONLY. NO MODIFICATIONS WITHOUT WRITTEN PCU APPROVAL

DETAIL 31

PIPE RESTRAINT LENGTHS IN FEET TEES (BRANCH SIDE)

WATER MAINS - TEST PRESSURE 150 PSI

RUN SIZE	BRANCH SIZE 3"	4"	6"	8"	10"	12"	16"	20"	24"
3"	6'	14'	30'	—	—	—	—	—	—
4"	2'	11'	28'	44'	—	—	—	—	—
6"	1'	2'	22'	40'	52'	—	—	—	—
8"	1'	1'	16'	35'	48'	62'	—	—	—
10"	1'	1'	10'	30'	44'	58'	83'	—	—
12"	1'	1'	3'	25'	40'	55'	80'	103'	—
16"	1'	1'	1'	14'	31'	48'	75'	98'	119'
20"	1'	1'	1'	2'	22'	40'	69'	94'	116'
24"	1'	1'	1'	1'	11'	31'	63'	89'	111'

RESTRAINT LENGTHS ARE MEASURED FROM THE CENTER LINE OF THE TEE ALONG THE BRANCH FOR THE DISTANCE INDICATED. A MINIMUM OF 5 FEET OF RESTRAINED PIPE MUST BE INSTALLED ON BOTH RUNS OF THE TEE. MEGALUG TYPE RESTRAINERS ARE REQUIRED ON ALL JOINTS.

CREATED 02/24/03
REVISED

RESTRAINED JOINT TABLE TEES (BRANCH SIDE)

PASCO COUNTY UTILITIES

PROVIDED FOR INFORMATIONAL PURPOSES ONLY. NO MODIFICATIONS WITHOUT WRITTEN PCU APPROVAL

DETAIL 32

HEIDT DESIGN
Civil Engineering • Planning & GIS
Transportation Engineering
Ecological Services • Landscape Architecture
Engineering Business Certificate of Authorization No. 28782
Landscape Architecture Certificate of Authorization No. LC26000405

5806-B Breckenridge Pkwy.
Tampa, Florida 33610
Office: 813-253-5311
Fax: 813-464-7629
www.HeidtDesign.com

RANGELAND BOULEVARD
WEST EXTENSION PHASE 2

UTILITY DETAILS

WS-TSR, LLC

PREPARED FOR:

DATE	DESCRIPTION
12/30/2015	INITIAL REVIEW SUBMITTAL

PROJECT NO: TSR SR 1072
FILE: WSD
DESIGN BY: JONES
DRAWN BY: JONES

FLORIDA PROFESSIONAL ENGINEER

GARY D. MILLER
DATE:
REGISTRATION NO. 52717

C-601

© COPYRIGHT 2015, HEIDT DESIGN, LLC. ALL RIGHTS RESERVED. NO DOCUMENTATION (INCLUDING BUT NOT LIMITED TO DRAWINGS OR EXHIBITS) MAY BE COPIED, REPRODUCED OR DISTRIBUTED IN ANY FORM OR BY ANY MEANS WITHOUT PRIOR WRITTEN PERMISSION OF HEIDT DESIGN, LLC. IT IS HEREBY GRANTED SPECIFICALLY TO GOVERNMENTAL AGENCIES TO REPRODUCE THIS DOCUMENTATION IN COMPLIANCE WITH F.S. CHAPTER 119.

R:\STARKEY RANCH\RANGELAND BLVD WEST EXT PHASE 2\ENGINEERING\WSD.DWG-C-601 2015\12\30 9:47 AM MARK JONES

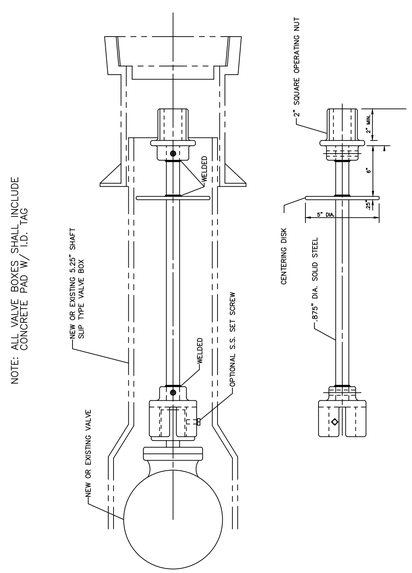

CREATED 02/24/03	VALVE EXTENSION RODS	PROVIDED FOR INFORMATIONAL PURPOSES ONLY. NO MODIFICATIONS WITHOUT WRITTEN PCU APPROVAL
REVISED	PASCO COUNTY UTILITIES	DETAIL 29

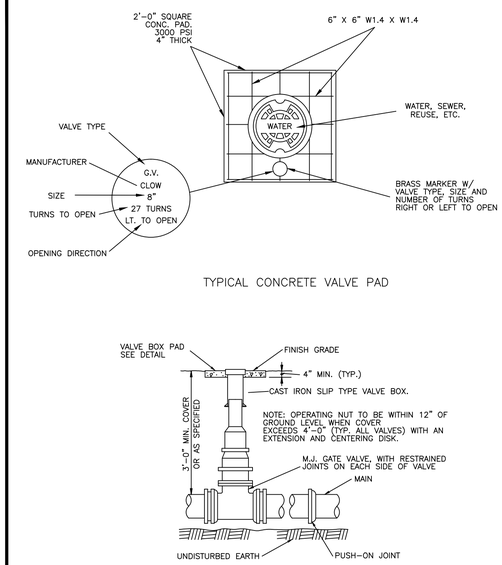

CREATED 02/24/03	VALVE BOX DETAIL SLIP TYPE	PROVIDED FOR INFORMATIONAL PURPOSES ONLY. NO MODIFICATIONS WITHOUT WRITTEN PCU APPROVAL
REVISED	PASCO COUNTY UTILITIES	DETAIL 30

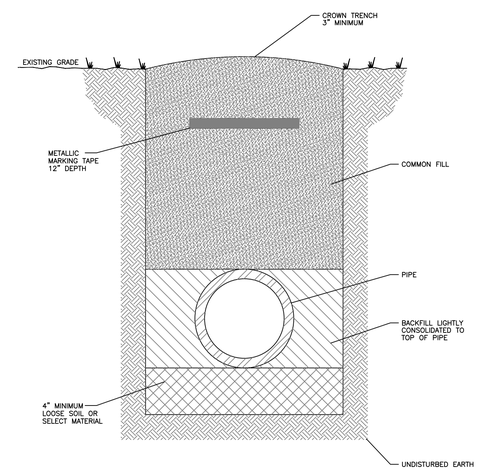

NOTES: -LOOSE SOIL OR SELECT MATERIAL IS NATIVE SOIL EXCAVATED FROM THE TRENCH FREE OF ROCKS AND FOREIGN MATERIAL.
-COMMON FILL TO BE PLACED AND COMPACTED IN 12" LAYERS. ROLLING EQUIPMENT SHALL NOT BE USED FOR COMPACTION UNTIL A MINIMUM OF 18" OF COMMON FILL HAS BEEN PLACED AND COMPACTED OVER THE PIPE. THREE FEET OF FILL SHALL BE PLACED BEFORE A HYDROHAMMER MAY BE USED FOR COMPACTION.

NTS

CREATED 02/24/03	PIPE LAYING CONDITIONS STANDARD UNPAVED AREAS	PROVIDED FOR INFORMATIONAL PURPOSES ONLY. NO MODIFICATIONS WITHOUT WRITTEN PCU APPROVAL
REVISED	PASCO COUNTY UTILITIES	DETAIL 35

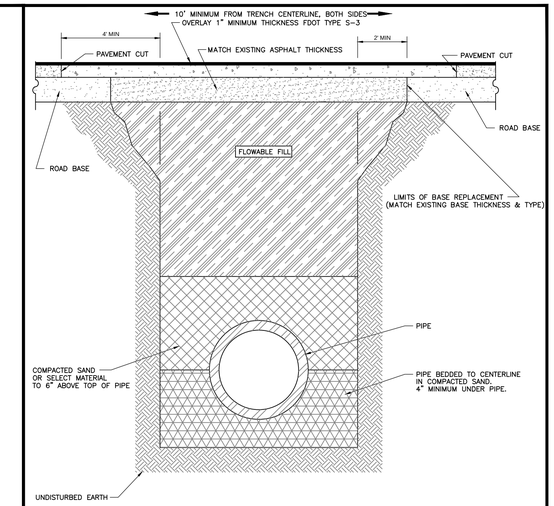

NOTE: -SELECT MATERIAL IS NATIVE SOIL EXCAVATED FROM THE TRENCH FREE OF ROCKS AND FOREIGN MATERIAL.
-COMPACTION TO TOP OF PILE IS TO BE APPROXIMATELY 98% STANDARD PROCTOR, AASHTO T-99.
-EXISTING CONCRETE/ASPHALT PAVEMENT SURFACE AND BASE TO BE CUT SQUARE WITH CONCRETE SAW.

NTS

CREATED 03/06/03	PIPE LAYING CONDITIONS FLOWABLE FILL BACKFILL STANDARD EXISTING PAVED AREAS & ROADWAYS	PROVIDED FOR INFORMATIONAL PURPOSES ONLY. NO MODIFICATIONS WITHOUT WRITTEN PCU APPROVAL
REVISED	PASCO COUNTY UTILITIES	DETAIL 36

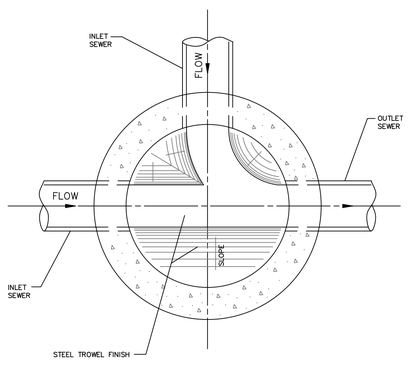

CREATED 02/24/03	STANDARD MANHOLE (BENCH AND INVERTS)	PROVIDED FOR INFORMATIONAL PURPOSES ONLY. NO MODIFICATIONS WITHOUT WRITTEN PCU APPROVAL
REVISED	PASCO COUNTY UTILITIES	DETAIL 39

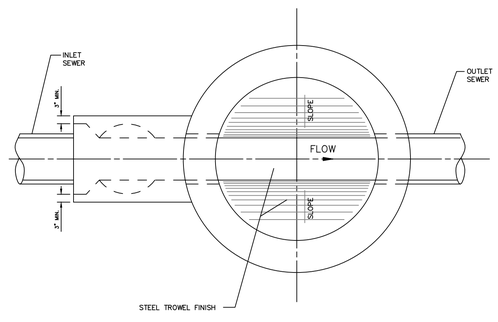

NOTE:
DROP MANHOLE TO BE USED WHEN THE DIFFERENCE BETWEEN INVERTS IS 2' OR MORE.

CREATED 02/24/03	DROP MANHOLE (BENCH AND INVERTS)	PROVIDED FOR INFORMATIONAL PURPOSES ONLY. NO MODIFICATIONS WITHOUT WRITTEN PCU APPROVAL
REVISED	PASCO COUNTY UTILITIES	DETAIL 40

NOTE:
PRECAST CONCRETE SHALL ATTAIN A MINIMUM COMPRESSIVE STRENGTH OF 4,000 p.s.i. AT 28 DAYS.

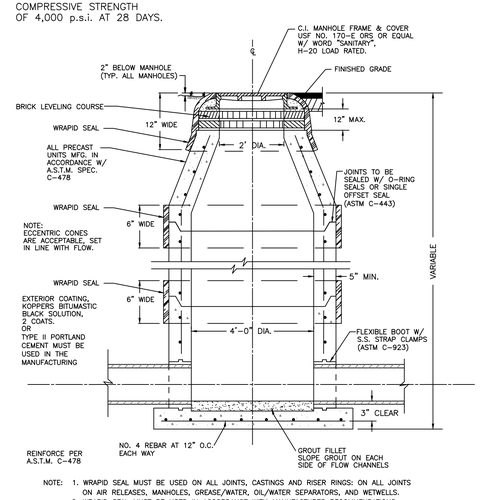

NOTE: 1. WRAPID SEAL MUST BE USED ON ALL JOINTS, CASTINGS AND RISER RINGS: ON ALL JOINTS ON AIR RELEASES, MANHOLES, GREASE/WATER, OIL/WATER SEPARATORS, AND WETWELLS.
2. WRAPID SEAL MUST BE USED IN ACCORDANCE WITH MANUFACTURES RECOMMENDATIONS.
3. PASCO COUNTY SHALL HAVE THE OPTION OF SPECIFYING THE TYPE OF INTERIOR LINING TO BE INSTALLED FOR EACH INDIVIDUAL MANHOLE.
4. PASCO COUNTY SHALL HAVE THE OPTION OF REQUIRING A NEGATIVE PRESSURE TEST PER ASTM C-1244
5. LIFT HOLES MUST NOT PENETRATE THE WALLS

CREATED 02/24/03	STANDARD MANHOLE	PROVIDED FOR INFORMATIONAL PURPOSES ONLY. NO MODIFICATIONS WITHOUT WRITTEN PCU APPROVAL
REVISED	PASCO COUNTY UTILITIES	DETAIL 41

NOTE:
ECCENTRIC CONES ARE ACCEPTABLE, SET IN LINE WITH FLOW.

EXTERIOR COATING, KOPPERS BITUMASTIC BLACK SOLUTION, 2 COATS. OR TYPE II PORTLAND CEMENT MUST BE USED IN THE MANUFACTURING PROCESS

NOTE:
PRECAST CONCRETE SHALL ATTAIN A MINIMUM COMPRESSIVE STRENGTH OF 4,000 p.s.i. AT 28 DAYS.

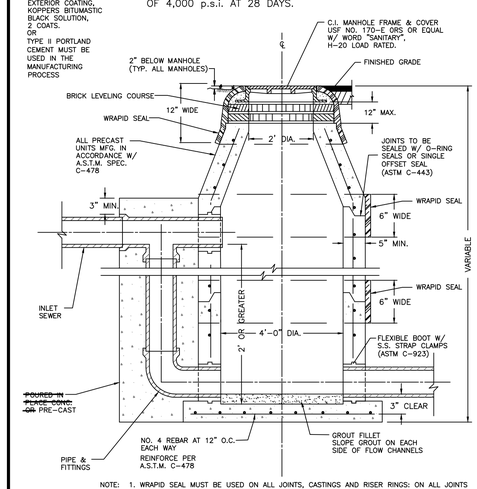

NOTE: 1. WRAPID SEAL MUST BE USED ON ALL JOINTS, CASTINGS AND RISER RINGS: ON ALL JOINTS ON AIR RELEASES, MANHOLES, GREASE/WATER, OIL/WATER SEPARATORS, AND WETWELLS.
2. WRAPID SEAL MUST BE USED IN ACCORDANCE WITH MANUFACTURES RECOMMENDATIONS.
3. PASCO COUNTY SHALL HAVE THE OPTION OF SPECIFYING THE TYPE OF INTERIOR LINING TO BE INSTALLED FOR EACH INDIVIDUAL MANHOLE.
4. PASCO COUNTY SHALL HAVE THE OPTION OF REQUIRING A NEGATIVE PRESSURE TEST PER ASTM C-1244
5. LIFT HOLES MUST NOT PENETRATE THE WALLS

CREATED 02/24/03	DROP MANHOLE	PROVIDED FOR INFORMATIONAL PURPOSES ONLY. NO MODIFICATIONS WITHOUT WRITTEN PCU APPROVAL
REVISED	PASCO COUNTY UTILITIES	DETAIL 42

HEIDT DESIGN
Civil Engineering • Planning & GIS
Transportation Engineering
Ecological Services • Landscape Architecture
Engineering Business Certificate of Authorization No. 28782
Landscape Architecture Certificate of Authorization No. LC26000405
5806-B Breckenridge Pkwy.
Tampa, Florida 33610
Office: 813-253-5311
Fax: 813-464-7629
www.HeidtDesign.com

RANGELAND BOULEVARD
WEST EXTENSION PHASE 2

UTILITY DETAILS

PREPARED FOR: WS-TSR, LLC

DATE	DESCRIPTION

DATE	DESCRIPTION
12/30/2015	INITIAL REVIEW SUBMITTAL

PROJECT NO: TSR SR 1072
FILE: WSD
DESIGN BY: JONES
DRAWN BY: JONES

FLORIDA PROFESSIONAL ENGINEER

GARY D. MILLER
DATE:
REGISTRATION NO. 52717

C-602

R:\STARKEY RANCH\RANGELAND BLVD WEST EXT PHASE 2\ENGINEERING\WSD.DWG-C-602 2015/12/30 9:47 AM MARK JONES

© COPYRIGHT 2015, HEIDT DESIGN, LLC. ALL RIGHTS RESERVED. NO DOCUMENTION (INCLUDING BUT NOT LIMITED TO DRAWINGS) OR EXHIBITS MAY BE REPRODUCED OR TRANSMITTED IN ANY FORM OR BY ANY MEANS, ELECTRONIC OR MECHANICAL, WITHOUT THE PERMISSION OF HEIDT DESIGN, LLC. IT IS HEREBY GRANTED SPECIFICALLY TO GOVERNMENTAL AGENCIES TO REPRODUCE THIS DOCUMENTATION IN COMPLIANCE WITH F.S. CHAPTER 119.

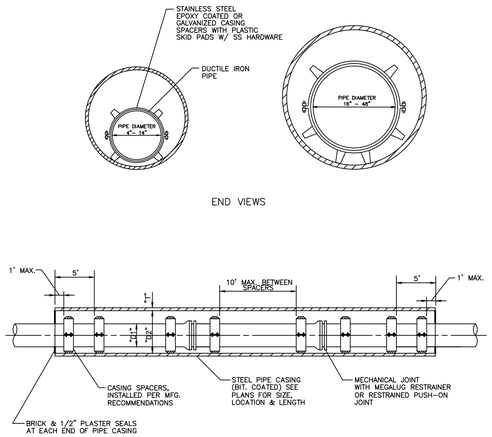

NOTE:
- CARRIER PIPE FOR WATER & REUSE MAINS SHALL BE CEMENT MORTAR LINED D.I.P.
- CARRIER PIPE FOR SEWER/FORCE MAINS SHALL BE GLASS FLAKE EPOXY (PROTECTO 401) OR POLYETHYLENE LINED D.I.P.
- CARRIER PIPE TO BE COLOR CODED WITH PAINT STRIPES:
  - WATER – BLUE
  - REUSE – PURPLE
  - SEWER – GREEN
- CASING SHALL EXTEND 8' MINIMUM BEYOND EDGE OF PAVEMENT.

CREATED 02/24/03	JACK & BORE CARRIER DETAIL	PROVIDED FOR INFORMATIONAL PURPOSES ONLY. NO MODIFICATIONS WITHOUT WRITTEN PCU APPROVAL
REVISED	PASCO COUNTY UTILITIES	DETAIL 33

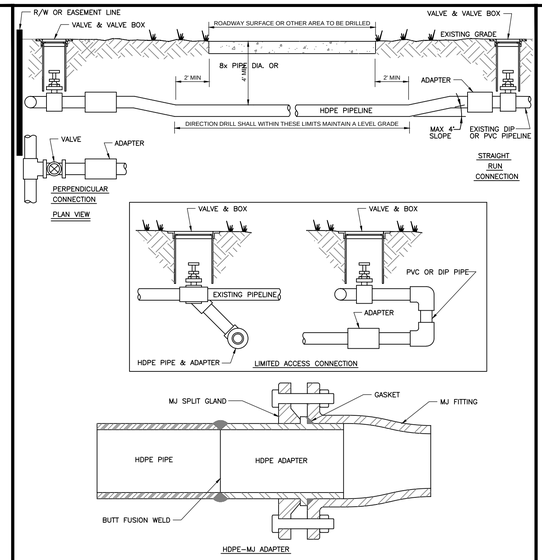

NOTE: –DIRECTIONAL DRILLS SHALL BE COMPLETED USING DR11 HDPE PIPE, DUCTILE IRON SIZE.
- ALL DIRECTIONAL DRILLS SHALL BE AT A DEPTH OF 8x PIPE DIAMETER BELOW THE ROADWAY SURFACE OR 4' WHICHEVER IS GREATER.
- –ALL HDPE MUST BE COLOR CODED (SAFETY BLUE–WATER, SAFETY GREEN FOR SEWER AND PANTONE PURPLE FOR RECLAIMED WATER); BUTT FUSION WELDED; AND CONNECTED WITH HDPE–MJ ADAPTER.

CREATED 03/06/03	DIRECTIONAL DRILLING	PROVIDED FOR INFORMATIONAL PURPOSES ONLY. NO MODIFICATIONS WITHOUT WRITTEN PCU APPROVAL
REVISED	PASCO COUNTY UTILITIES	DETAIL 34

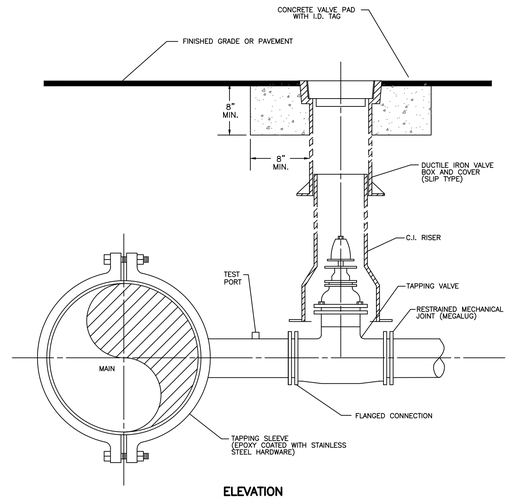

ELEVATION

NOTES:
- SADDLE CONNECTION WILL BE TESTED TO 150 PSI PRIOR TO TAPPING MAIN.
- MECHANICAL JOINTS/UNDERGROUND PIPING SHALL BE RESTRAINED AS SPECIFIED BY COUNTY/ENGINEER.
- VALVE EXTENSION ROD SHALL BE UTILIZED, AS NECESSARY, SO THAT VALVE OPERATING NUT IS A MAXIMUM OF 3' BELOW GRADE.

CREATED 02/24/03	WATER, REUSE, AND FORCE MAIN TAPPING DETAIL W/ VALVE LOCATION	PROVIDED FOR INFORMATIONAL PURPOSES ONLY. NO MODIFICATIONS WITHOUT WRITTEN PCU APPROVAL
REVISED	PASCO COUNTY UTILITIES	DETAIL 37

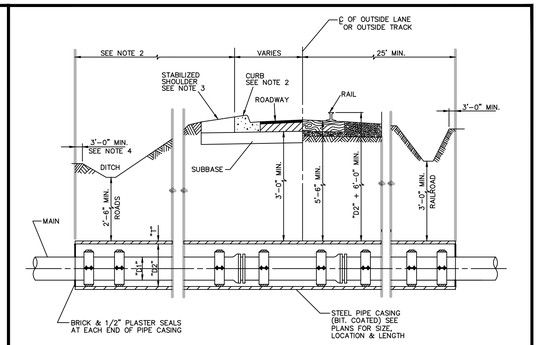

NOTE:
1. VERTICAL DIMENSIONS ARE TYPICAL FOR MAINS.
2. CASINGS SHALL TERMINATE 8' MINIMUM BEYOND EDGE OF PAVEMENT.
3. CASINGS SHALL HAVE 30" MINIMUM COVER UNDER DITCH BOTTOMS AND 36" ELSEWHERE.
4. GRAVITY SEWERS SHALL BE PROPERLY ANCHORED TO PREVENT FLOATATION WITH SPACERS ADJUSTED TO PROVIDE THE SLOPE REQUIRED.
5. SEE SECTION B.2 FOR CASING SIZE.

CARRIER PIPE (INCHES)	CASING PIPE (INCHES)	CASING WALL THICKNESS (INCHES)
4	12	1/4
6	16	1/4
8	16	1/4
10	24	5/16
12	24	5/16
16	30	3/8
20	36	3/8
24	42	3/8
30	48	3/8
36	54	1/2
42	60	1/2
48	66	1/2

CREATED 02/24/03	JACK & BORE DETAIL	PROVIDED FOR INFORMATIONAL PURPOSES ONLY. NO MODIFICATIONS WITHOUT WRITTEN PCU APPROVAL
REVISED	PASCO COUNTY UTILITIES	DETAIL 38

HEIDT DESIGN
Civil Engineering • Planning & GIS
Transportation Engineering
Ecological Services • Landscape Architecture
Engineering Business Certificate of Authorization No. 28782
Landscape Architecture Certificate of Authorization No. LC26000405
5806-B Breckenridge Pkwy.
Tampa, Florida 33610
Office: 813-253-5311
Fax: 813-464-7629
www.HeidtDesign.com

RANGELAND BOULEVARD
WEST EXTENSION PHASE 2

UTILITY DETAILS

PREPARED FOR: WS-TSR, LLC

DATE	DESCRIPTION

	DATE	DESCRIPTION
1	12/30/2015	INITIAL REVIEW SUBMITTAL

PROJECT NO: TSR SR 1072
FILE: WSD
DESIGN BY: JONES
DRAWN BY: JONES

FLORIDA PROFESSIONAL ENGINEER

GARY D. MILLER
DATE:
REGISTRATION NO. 52717

C-603

© COPYRIGHT 2015, HEIDT DESIGN, LLC. ALL RIGHTS RESERVED. NO DOCUMENTATION INCLUDING BUT NOT LIMITED TO DRAWINGS OR EXHIBITS MAY BE COPIED OR REPRODUCED IN ANY FORM OR MEDIUM WITHOUT THE EXPRESS WRITTEN PERMISSION OF HEIDT DESIGN, LLC. HOWEVER, IT IS HEREBY GRANTED SPECIFICALLY TO GOVERNMENTAL AGENCIES TO REPRODUCE THIS DOCUMENTATION IN COMPLIANCE WITH F.S. CHAPTER 119.

R:\STARKEY RANCH\RANGELAND BLVD WEST EXT PHASE 2\ENGINEERING\WSD.DWG-C-603 2015\12\30 9:47 AM MARK JONES

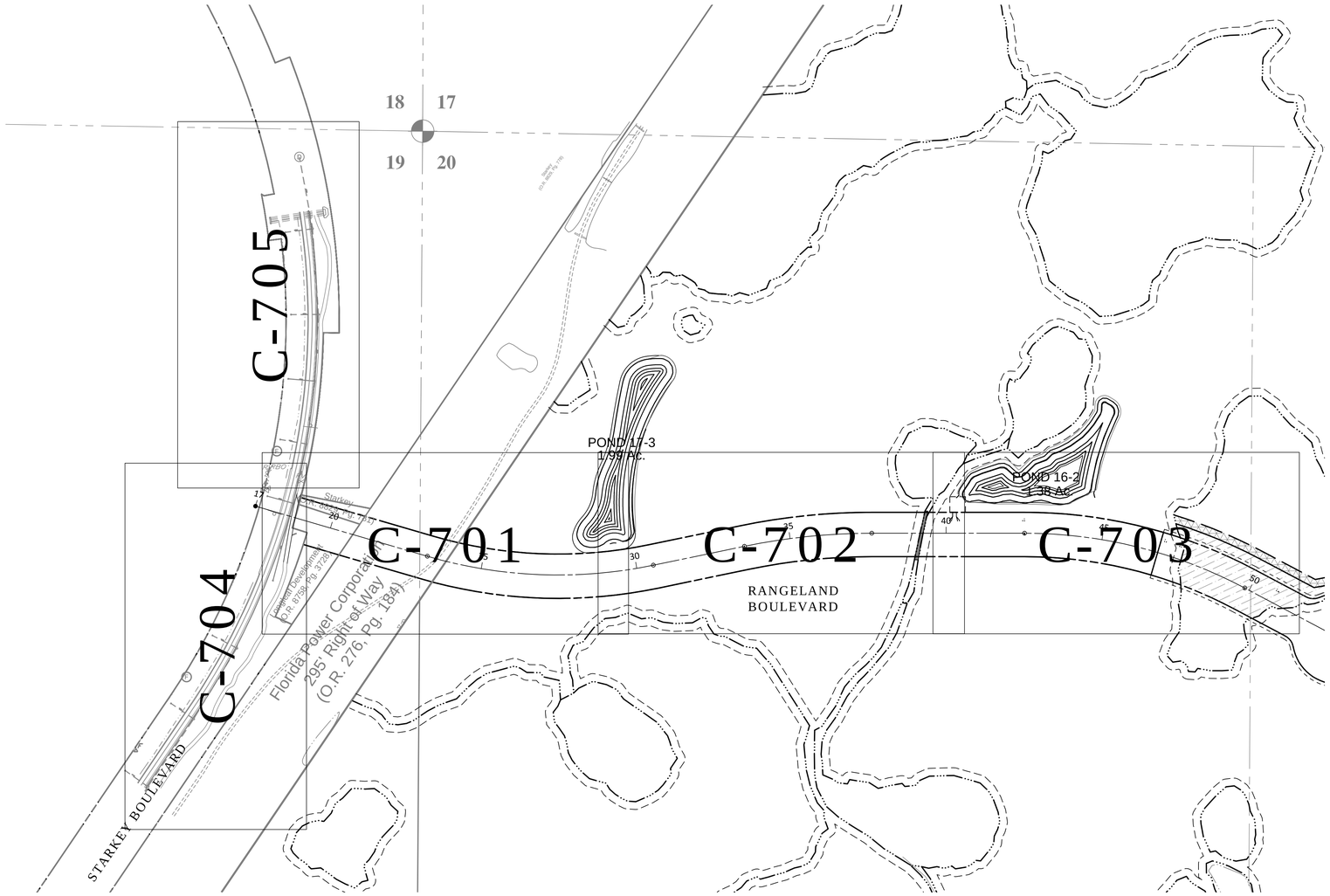

N

0 # #

GRAPHIC SCALE: 1" = #'

ELEVATIONS BASED ON:
NORTH AMERICAN VERTICAL DATUM 1988
CONVERSION:
NAVD 88 TO NGVD 29 = +0.85

SPECIFICATIONS FOR DESIGN AND INSTALLATION OF TRAFFIC CONTROL DEVICES ON COUNTY ROADS

1) Purpose:

These specifications have been developed to provide developers with a uniform system for installation of traffic control devices on the County road system. A uniform system provides for reduced maintenance costs and a high standard of visibility for drivers. All required traffic control devices shall be installed by the developer of the project.

2) Florida State Statute 316.0745:

2.1) Any and all traffic control devices installed on the County road system shall conform to Florida State Statute 316.0745, Uniform Signals and Devices.
2.2) This statute requires that all devices conform to Florida Department of Transportation (FDOT) Specifications. The FDOT has adopted the Federal Manual on Uniform Traffic Control Devices as the standards to be used in the State of Florida.

3) Pavement Markings:

3.1) All pavement markings shall be thermoplastic or preformed tapes; raised pavement markers shall be class "B".
3.2) Pavement markings and raised pavement markers shall be installed on all roads classified other than residential with an ADT greater than 500 vehicles, or if other conditions exist that require pavement markings, (see M.U.T.C.D. Section 3B-1).

4) Traffic Control Signs:

4.1) All sign blanks shall be of a type currently certified by the FDOT for use in the State of Florida.
4.2) All sign faces shall be High Intensity grade and of a type currently certified by the FDOT for use in the State of Florida.
4.3) All signs shall be no less than the standard size as specified by the Federal Manual on Uniform Traffic Control Devices. No minimum size signing shall be accepted. Larger signs shall be used when required by design speed, etc.
4.4) Street name signs shall be 6" on local roads, and 9" on collector and arterial roads. Six inch signs shall have 4" series C letters and 9" signs shall have 6" series B letters. All street name signs on private roads shall be standard D3 street name signs with the colors reversed. White background with green letters and border. At intersections with county maintained roads, the county maintained road shall be green background with white letters and border. Street name sign brackets for 6" signs 30" long or less, or 9" signs 24" long or less, shall have a 5 inch blade or cross. All other street name signs shall be mounted with brackets with a 12 inch blade or 8 inch cross. All street name sign brackets shall be supplied with bolts, set screws will not be accepted.
4.5) On roads to be maintained by Pasco County, all signs other than street names shall be date coded with a yellow reflective label affixed to the back of the sign. It will be punched to show month, day and year of installation (See Sample Label). Alternate label designs providing the date code information may be used if a sample is submitted and approved by Pasco County prior to installation.

Sample Label: size 2" x 4"

WARNING

REMOVAL OF, OR DEFACING ANY TRAFFIC CONTROL
DEVICE IS PUNISHABLE BY FINE AND/OR IMPRISONMENT
REPORT DAMAGE BY CALLING (727) 847-2411

INSTALLED

J F M A M J J A S O N D

10's 20's 30's - 1 2 3 4 5 6 7 8 9

01 02 03 04 05 06 07 08 09

4.6) All post systems, mounting brackets and hardware shall be of a type currently in use by the Pasco County Public Works Department and currently certified by the Florida Department of Transportation for use in the State of Florida. Alternative systems, etc., shall only be used if approved by the County Engineer.

5) Certification of materials:

5.1) All traffic control devices and materials shall be on the current FDOT APPROVED PRODUCTS LIST. Proof of certification is required for all traffic control devices.
5.2) A Traffic Control Devices Submittal Data Form shall be submitted for approval prior to installation of any traffic control device. No traffic control device shall be installed until the certification submittal has been approved by the Traffic Operations Division. These forms are available from the Traffic Operations Division. Copies of the approved Traffic Control Devices Submittal Data Form shall be sent to the contractor and the Engineering Inspections Division.

6) Traffic Control Devices Plan:

6.1) A detailed set of plans for required traffic control devices shall be submitted for all road construction, site development, subdivision, and Right-of-Way Use Permits. These plans shall be in conformance with FDOT design standards. All plans shall be signed and sealed by a registered professional engineer in the State of Florida.
6.2) With the submittal of final plans to the Development Review Division, two additional sets of the traffic control plan portion of the entire plan shall be submitted. These two sets will be forwarded to the Traffic Operations Division.

7) Cost Estimate:

An engineer's cost estimate shall be required for all proposed traffic control devices. The estimate shall be provided in conjunction with the Traffic Control Devices Submittal Data Form (See Section 5.2).

8) Inspection and Acceptance:

8.1) Upon completion of the installation of the traffic control devices, the contractor shall call the Engineering Inspections Division for an inspection at (727) 847-8154.
8.2) The inspection shall be made by the Engineering Inspection Division within 48 hours (two working days) of the request.
8.3) An inspection report shall be made by the Engineering Inspections Division. Copies of the report shall be sent to the Engineer and the developer.
8.4) No roadway shall be open to the public until all traffic control devices have been inspected and accepted by Pasco County.

HEIDT DESIGN
Civil Engineering • Planning & GIS
Transportation Engineering
Ecological Services • Landscape Architecture
Engineering Business Certificate of Authorization No. 28782
Landscape Architecture Certificate of Authorization No. LC26000415
5806-B Breckenridge Pkwy.
Tampa, Florida 33610
Office: 813-253-5311
Fax: 813-464-7629
www.HeidtDesign.com

RANGELAND BOULEVARD
WEST EXTENSION PHASE 2
SIGNING, PAVEMENT MARKING, AND
SIDEWALK KEY SHEET

PREPARED FOR: WS-TSR, LLC

DATE	DESCRIPTION

DATE	DESCRIPTION
12/30/2015	INITIAL REVIEW SUBMITTAL
1	

PROJECT NO:	TSR SR 1072
FILE:	SPM-KEY
DESIGN BY:	MOORE
DRAWN BY:	JONES

FLORIDA PROFESSIONAL ENGINEER

GARY D. MILLER
DATE:
REGISTRATION NO. 52717

C-700

R:\STARKEY RANCH\RANGELAND BLVD WEST EXT PHASE 2\ENGINEERING\SPM-KEY.DWG-C-700 2015\12\30 9:48 AM MARK JONES

© COPYRIGHT 2015, HEIDT DESIGN, LLC. ALL RIGHTS RESERVED. NO DOCUMENTS FOR INCLUDING BUT NOT LIMITED TO DRAWINGS OR PLANS TO MAY BE COPIED, REPRODUCED, OR DISTRIBUTED UNLESS SPECIFIC WRITTEN PERMISSION HAS BEEN OBTAINED FROM HEIDT DESIGN, LLC. IN ADVANCE. CONSENT IS HEREBY GRANTED SPECIFICALLY TO GOVERNMENTAL AGENCIES TO REPRODUCE THIS DOCUMENT FOR IN COMPLIANCE WITH F.S. CHAPTER 119.

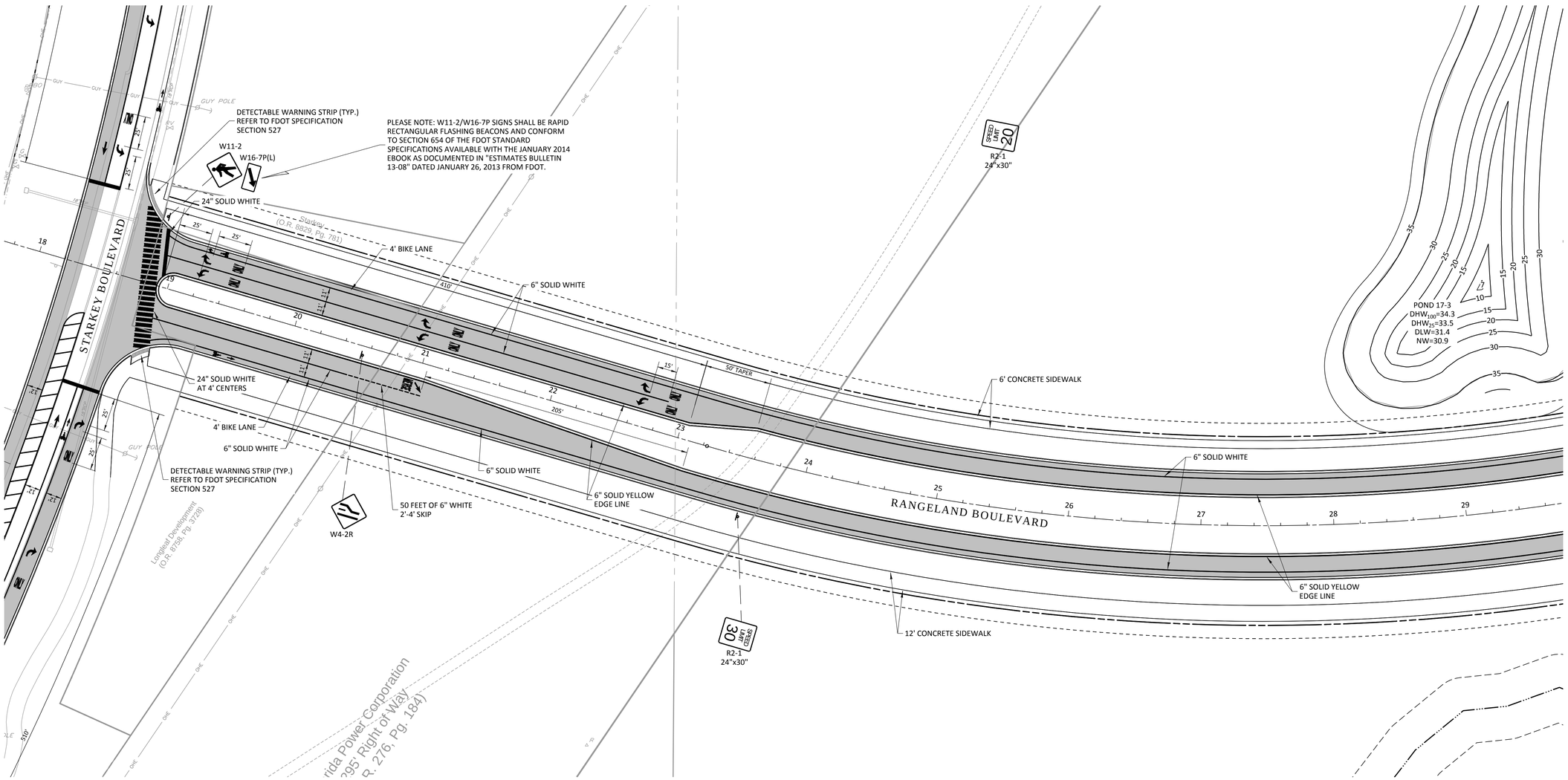

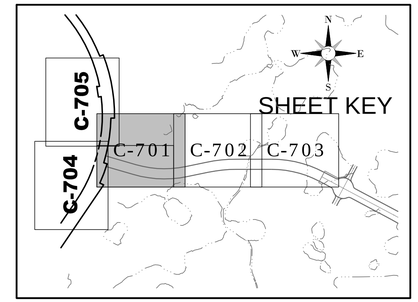

N

0 40 80

GRAPHIC SCALE: 1" = 40'

ELEVATIONS BASED ON:
NORTH AMERICAN VERTICAL DATUM 1988
CONVERSION:
NAVD 88 TO NGVD 29 = +0.85

FOR SIGNING AND PAVEMENT MARKING NOTES
SEE SHEET C-700

HEIDT DESIGN
Civil Engineering • Planning & GIS
Transportation Engineering
Ecological Services • Landscape Architecture
Engineering Business Certificate of Authorization No. 28782
Landscape Architecture Certificate of Authorization No. LC26000405
5806-B Breckenridge Pkwy.
Tampa, Florida 33610
Office: 813-253-5311
Fax: 813-464-7629
www.HeidtDesign.com

RANGELAND BOULEVARD WEST EXTENSION PHASE 2
SIGNING, PAVEMENT MARKING, AND SIDEWALK PLAN-RANGELAND

PREPARED FOR: WS-TSR, LLC

R:\STARKEY RANCH\RANGELAND BLVD WEST EXT PHASE 2\ENGINEERING\SPM-01.DWG-C-701 2015\12\30 9:48 AM MARK JONES

1	12/30/2015	INITIAL REVIEW SUBMITTAL
	DATE	DESCRIPTION

	DATE	DESCRIPTION

PROJECT NO:	TSR SR 1072
FILE:	SPM-01
DESIGN BY:	MOORE
DRAWN BY:	JONES

FLORIDA PROFESSIONAL ENGINEER

GARY D. MILLER
DATE:
REGISTRATION NO. 52717

C-701

© COPYRIGHT 2015, HEIDT DESIGN, LLC. ALL RIGHTS RESERVED. NO DOCUMENTATION INCLUDING BUT NOT LIMITED TO DRAWINGS OR PLANS TO MAY BE COPIED, REPRODUCED, OR DISTRIBUTED UNLESS SPECIFIC WRITTEN PERMISSION HAS BEEN OBTAINED FROM HEIDT DESIGN, LLC. IN ADVANCE. CONSENT IS HEREBY GRANTED SPECIFICALLY TO GOVERNMENTAL AGENCIES TO REPRODUCE THIS DOCUMENTATION IN COMPLIANCE WITH F.S. CHAPTER 119.

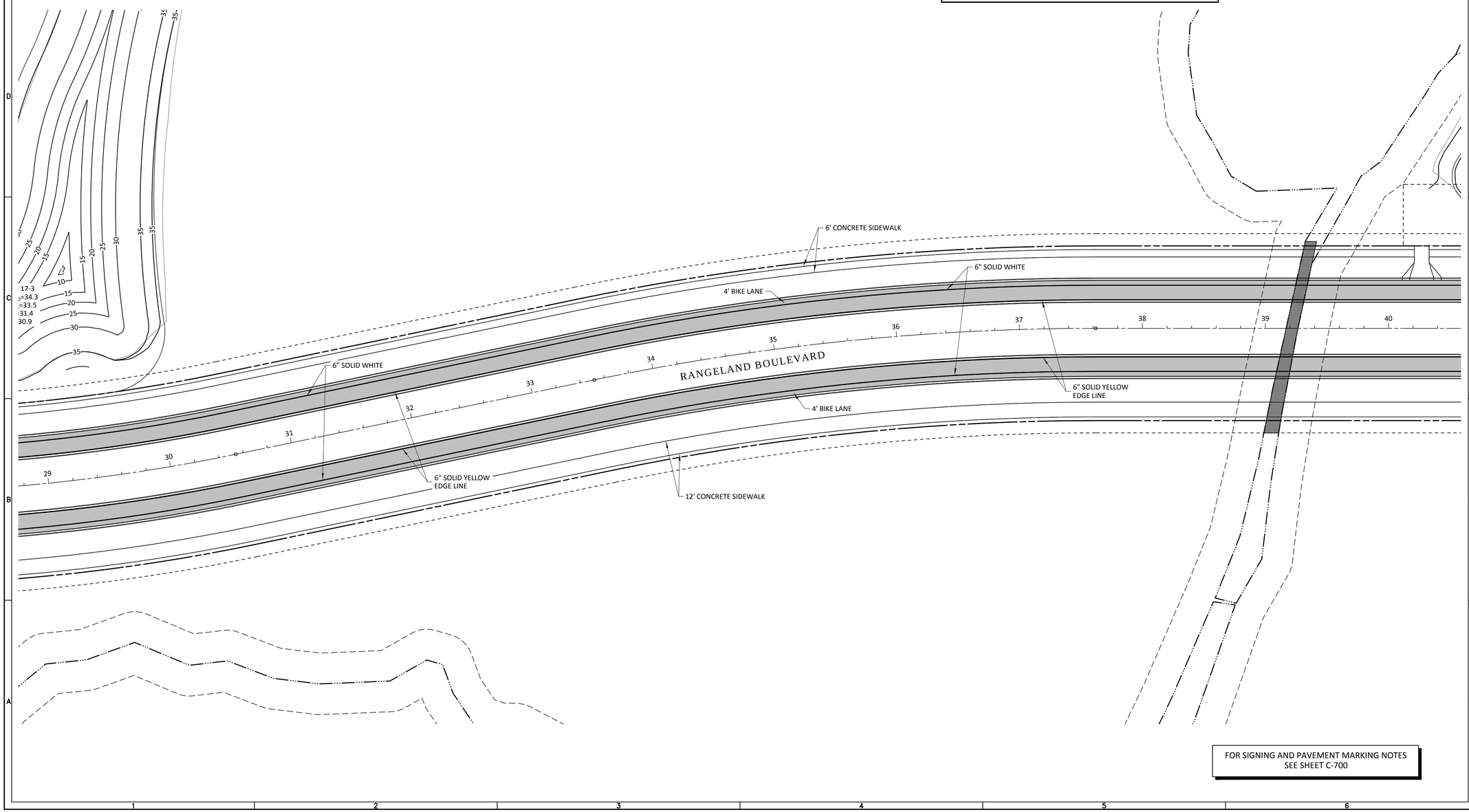

FOR SIGNING AND PAVEMENT MARKING NOTES
SEE SHEET C-700

HEIDT DESIGN
Civil Engineering • Planning & GIS
Transportation Engineering
Ecological Services • Landscape Architecture
Engineering Business Certificate of Authorization No. 28782
Landscape Architecture Certificate of Authorization No. LC26000415
5806-B Breckenridge Pkwy.
Tampa, Florida 33610
Office: 813-253-5311
Fax: 813-464-7629
www.HeidtDesign.com

RANGELAND BOULEVARD WEST EXTENSION PHASE 2

SIGNING, PAVEMENT MARKING, AND SIDEWALK PLAN-RANGELAND

PREPARED FOR: WS-TSR, LLC

DATE	DESCRIPTION

DATE	DESCRIPTION
12/30/2015	INITIAL REVIEW SUBMITTAL

PROJECT NO:	TSR SR 1072
FILE:	SPM-01
DESIGN BY:	MOORE
DRAWN BY:	JONES

FLORIDA PROFESSIONAL ENGINEER

GARY D. MILLER
DATE:
REGISTRATION NO. 52717

C-702

R:\STARKEY RANCH\RANGELAND BLVD WEST EXT PHASE 2\ENGINEERING\SPM-01.DWG-C-702 2015\12\30 9:48 AM MARK JONES

© COPYRIGHT 2015, HEIDT DESIGN, LLC. ALL RIGHTS RESERVED. NO DOCUMENTATION INCLUDING BUT NOT LIMITED TO DRAWINGS OR EXHIBITS MAY BE COPIED, REPRODUCED, OR DISTRIBUTED UNLESS SPECIFIC WRITTEN PERMISSION HAS BEEN OBTAINED FROM HEIDT DESIGN, LLC. IN ADVANCE. CONSENT IS HEREBY GRANTED SPECIFICALLY TO GOVERNMENTAL AGENCIES TO REPRODUCE THIS DOCUMENTATION IN COMPLIANCE WITH F.S. CHAPTER 119.

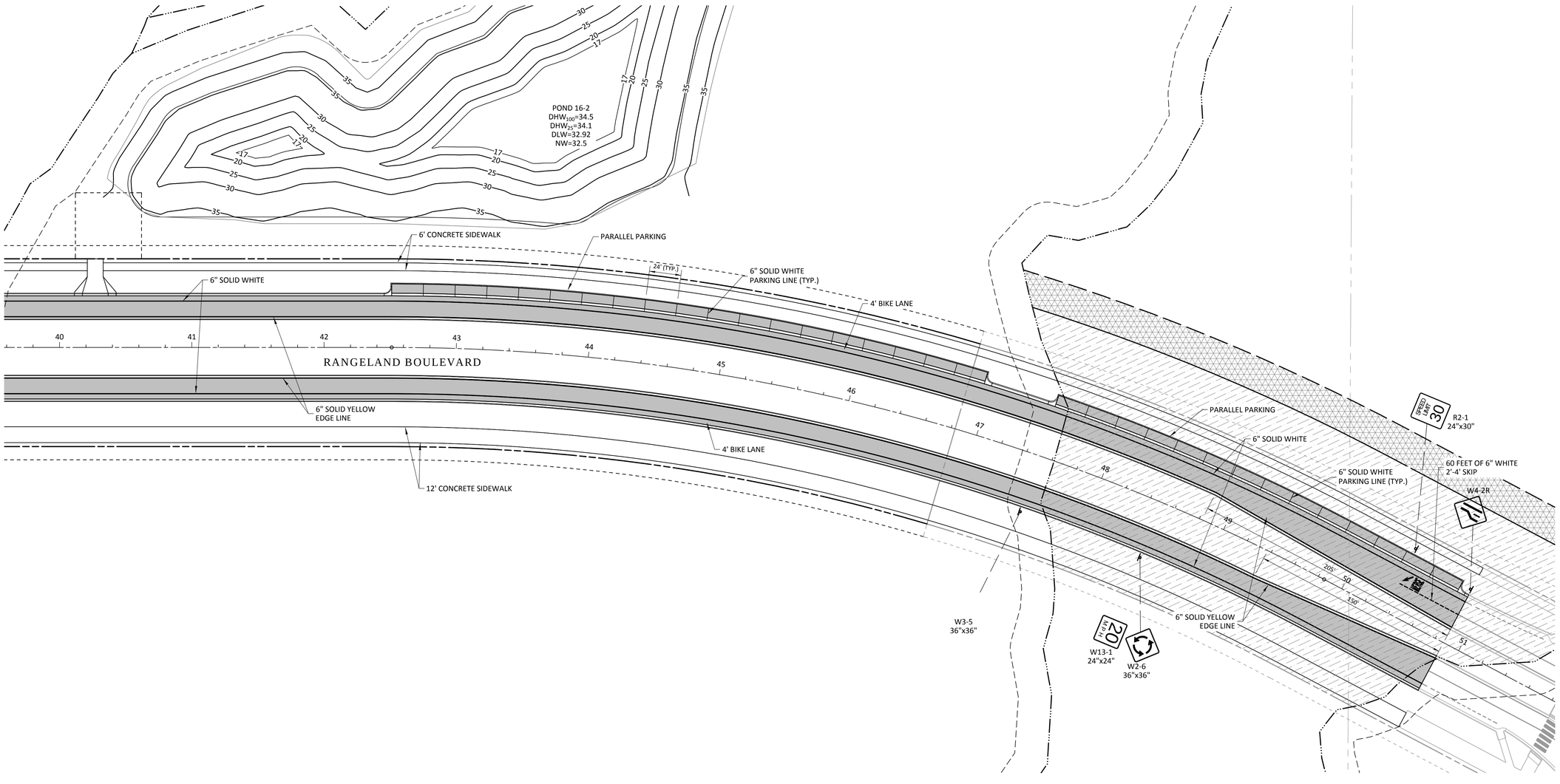

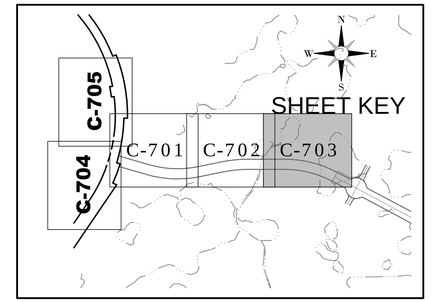

N

0 40 80

GRAPHIC SCALE: 1" = 40'

ELEVATIONS BASED ON:
NORTH AMERICAN VERTICAL DATUM 1988
CONVERSION:
NAVD 88 TO NGVD 29 = +0.85

FOR SIGNING AND PAVEMENT MARKING NOTES
SEE SHEET C-700

HEIDT DESIGN
Civil Engineering • Planning & GIS
Transportation Engineering
Ecological Services • Landscape Architecture
Engineering Business Certificate of Authorization No. 28782
Landscape Architecture Certificate of Authorization No. LC26000415
5806-B Breckenridge Pkwy.
Tampa, Florida 33610
Office: 813-253-5311
Fax: 813-464-7629
www.HeidtDesign.com

RANGELAND BOULEVARD
WEST EXTENSION PHASE 2
SIGNING, PAVEMENT MARKING, AND
SIDEWALK PLAN-RANGELAND

PREPARED FOR:
WS-TSR, LLC

DATE	DESCRIPTION

DATE	DESCRIPTION
1 12/30/2015	INITIAL REVIEW SUBMITTAL

PROJECT NO:	TSR SR 1072
FILE:	SPM-01
DESIGN BY:	MOORE
DRAWN BY:	JONES

FLORIDA PROFESSIONAL ENGINEER

GARY D. MILLER
DATE:
REGISTRATION NO. 52717

C-703

R:\STARKEY RANCH\RANGELAND BLVD WEST EXT PHASE 2\ENGINEERING\SPM-01.DWG-C-703 2015\12\30 9:48 AM MARK JONES

© COPYRIGHT 2015, HEIDT DESIGN, LLC. ALL RIGHTS RESERVED. NO DOCUMENTS INCLUDING BUT NOT LIMITED TO DRAWINGS OR EXHIBITS MAY BE COPIED, REPRODUCED, OR DISTRIBUTED UNLESS SPECIFIC WRITTEN PERMISSION HAS BEEN OBTAINED FROM HEIDT DESIGN, LLC. IN ADVANCE. CONSENT IS HEREBY GRANTED SPECIFICALLY TO GOVERNMENTAL AGENCIES TO REPRODUCE THIS DOCUMENT FOR IN-COMPLIANCE WITH F.S. CHAPTER 119.

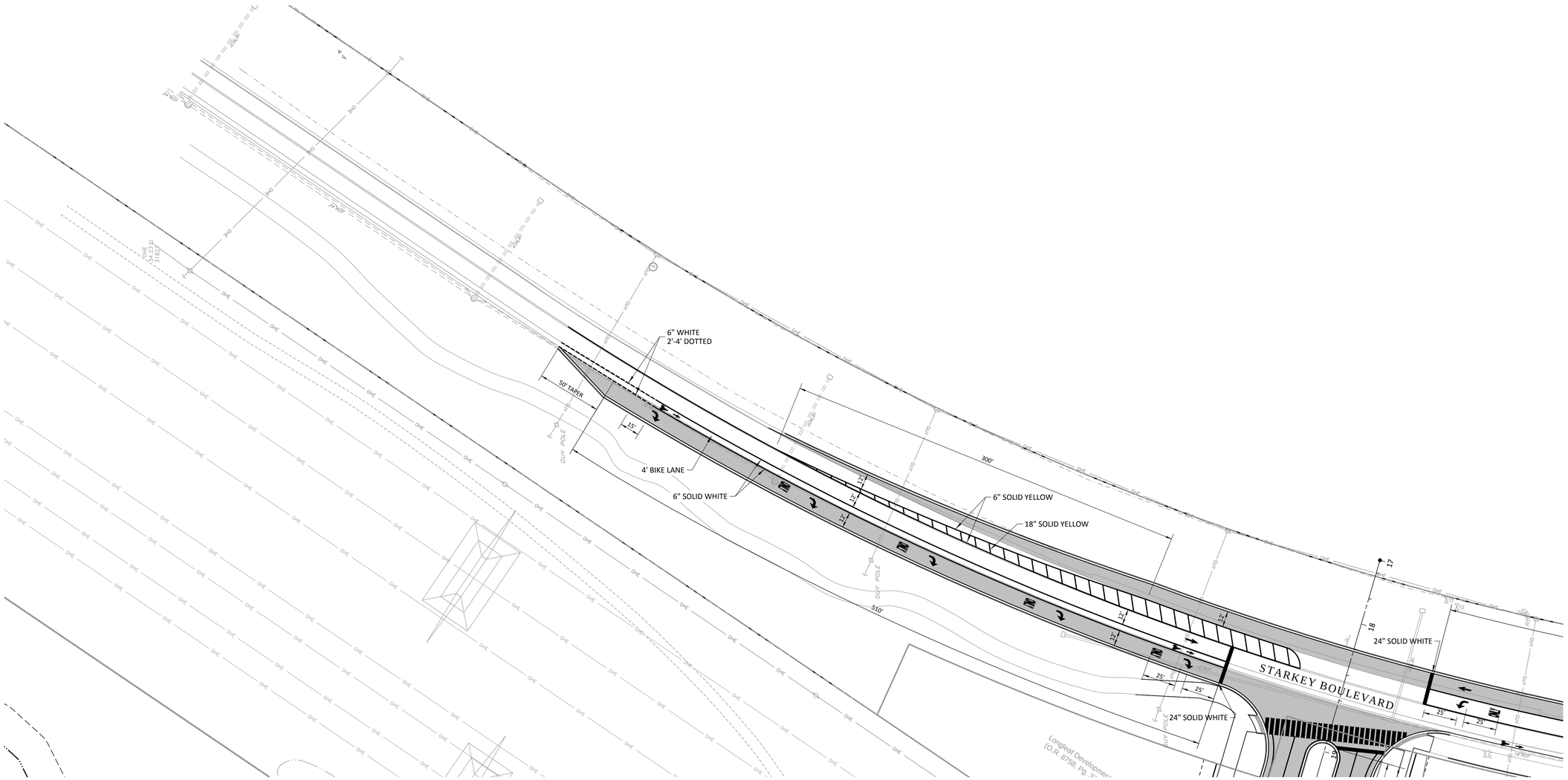

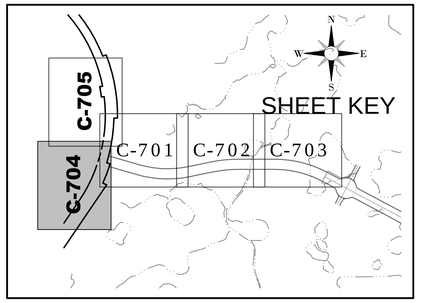

N

0 40 80

GRAPHIC SCALE: 1" = 40'

ELEVATIONS BASED ON:
NORTH AMERICAN VERTICAL DATUM 1988
CONVERSION:
NAVD 88 TO NGVD 29 = +0.85

FOR SIGNING AND PAVEMENT MARKING NOTES
SEE SHEET C-700

HEIDT DESIGN
Civil Engineering • Planning & GIS
Transportation Engineering
Ecological Services • Landscape Architecture
Engineering Business Certificate of Authorization No. 28782
Landscape Architecture Certificate of Authorization No. LC26000405
5806-B Breckenridge Pkwy.
Tampa, Florida 33610
Office: 813-253-5311
Fax: 813-464-7629
www.HeidtDesign.com

RANGELAND BOULEVARD
WEST EXTENSION PHASE 2
SIGNING, PAVEMENT MARKING, AND
SIDEWALK PLAN-STARKEY

PREPARED FOR: WS-TSR, LLC

	DATE	DESCRIPTION

	DATE	DESCRIPTION
1	12/30/2015	INITIAL REVIEW SUBMITTAL

PROJECT NO:	TSR SR 1072
FILE:	SPM-01
DESIGN BY:	MOORE
DRAWN BY:	JONES

FLORIDA PROFESSIONAL ENGINEER

GARY D. MILLER
DATE:
REGISTRATION NO. 52717

C-704

R:\STARKEY RANCH\RANGELAND BLVD WEST EXT PHASE 2\ENGINEERING\SPM-01.DWG-C-704 2015\12\30 9:48 AM MARK JONES

© COPYRIGHT 2015, HEIDT DESIGN, LLC. ALL RIGHTS RESERVED. NO DOCUMENTATION INCLUDING BUT NOT LIMITED TO DRAWINGS OR EXHIBITS MAY BE COPIED, REPRODUCED, OR DISTRIBUTED UNLESS SPECIFIC WRITTEN PERMISSION HAS BEEN OBTAINED FROM HEIDT DESIGN, LLC. IN ADVANCE. CONSENT IS HEREBY GRANTED SPECIFICALLY TO GOVERNMENTAL AGENCIES TO REPRODUCE THIS DOCUMENTATION IN COMPLIANCE WITH F.S. CHAPTER 119.

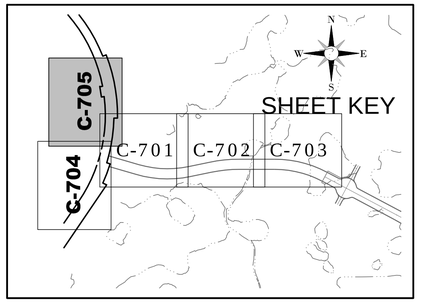

N

0 40 80
GRAPHIC SCALE: 1" = 40'

ELEVATIONS BASED ON:
NORTH AMERICAN VERTICAL DATUM 1988
CONVERSION:
NAVD 88 TO NGVD 29 = +0.85

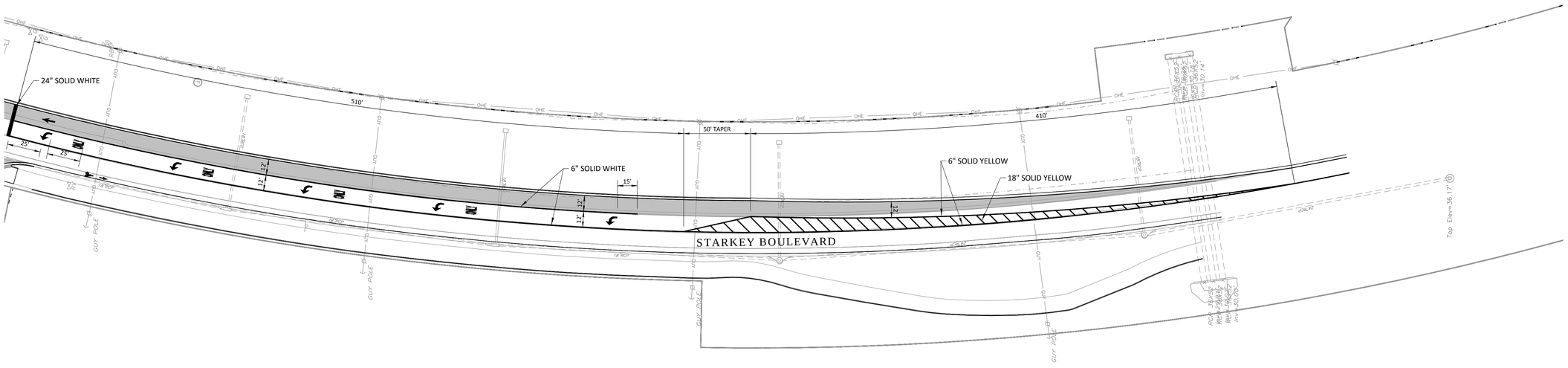

FOR SIGNING AND PAVEMENT MARKING NOTES
SEE SHEET C-700

HEIDT DESIGN
Civil Engineering • Planning & GIS
Transportation Engineering
Ecological Services • Landscape Architecture
Engineering Business Certificate of Authorization No. 28782
Landscape Architecture Certificate of Authorization No. LC26000415
5806-B Breckenridge Pkwy.
Tampa, Florida 33610
Office: 813-253-5311
Fax: 813-464-7629
www.HeidtDesign.com

RANGELAND BOULEVARD
WEST EXTENSION PHASE 2
SIGNING, PAVEMENT MARKING, AND
SIDEWALK PLAN-STARKEY

PREPARED FOR:
WS-TSR, LLC

DATE	DESCRIPTION

DATE	DESCRIPTION
12/30/2015	INITIAL REVIEW SUBMITTAL
1	

PROJECT NO:	TSR SR 1072
FILE:	SPM-01
DESIGN BY:	MOORE
DRAWN BY:	JONES

FLORIDA PROFESSIONAL ENGINEER

GARY D. MILLER
DATE:
REGISTRATION NO. 52717

C-705

R:\STARKEY RANCH\RANGELAND BLVD WEST EXT PHASE 2\ENGINEERING\SPM-01.DWG-C-705:2015\12\30\9:48 AM MARK JONES

© COPYRIGHT 2015, HEIDT DESIGN, LLC. ALL RIGHTS RESERVED. NO DOCUMENTATION, INCLUDING BUT NOT LIMITED TO DRAWINGS OR EXHIBITS MAY BE COPIED, REPRODUCED, OR DISTRIBUTED UNLESS SPECIFIC WRITTEN PERMISSION HAS BEEN OBTAINED FROM HEIDT DESIGN, LLC. IN ADVANCE. CONSENT IS HEREBY GRANTED SPECIFICALLY TO GOVERNMENTAL AGENCIES TO REPRODUCE THIS DOCUMENTATION IN COMPLIANCE WITH F.S. CHAPTER 119.

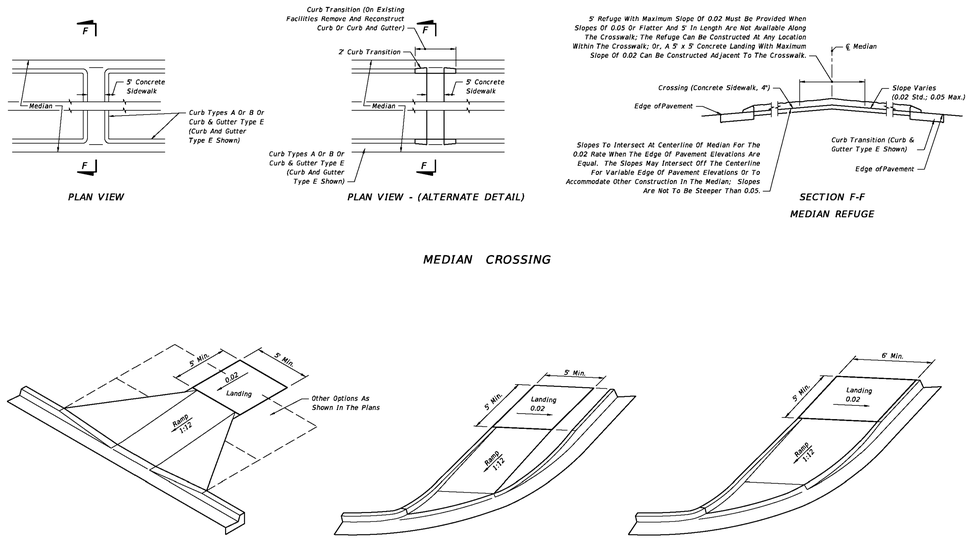

LAST REVISION	REVISION	DESCRIPTION:	FDOT 2015 DESIGN STANDARDS	DETECTABLE WARNINGS AND SIDEWALK CURB RAMPS	INDEX NO.	SHEET NO.
07/01/13					304	5 of 7

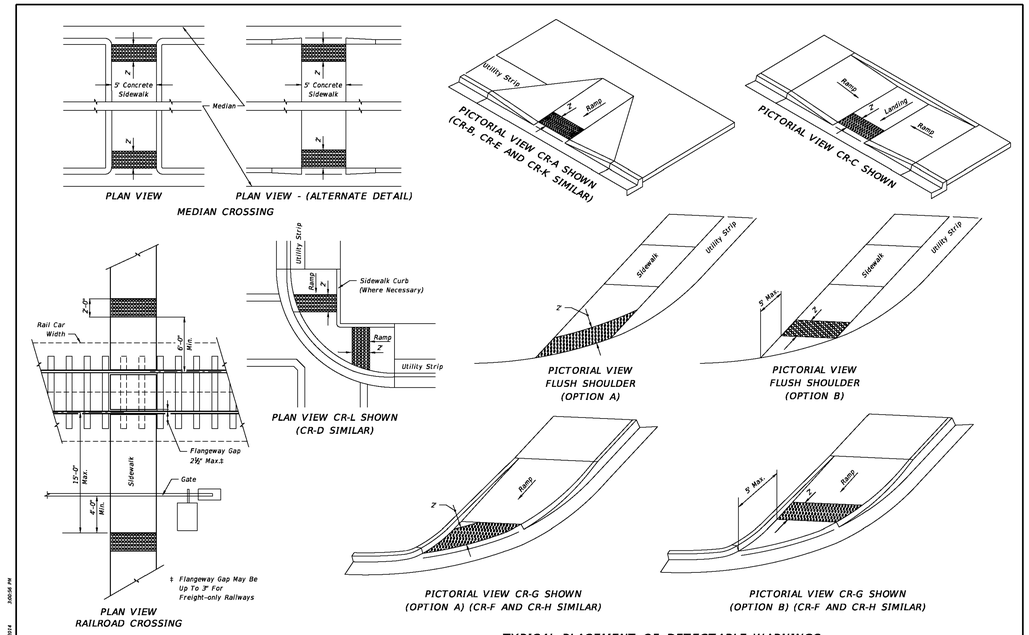

LAST REVISION	REVISION	DESCRIPTION:	FDOT 2015 DESIGN STANDARDS	DETECTABLE WARNINGS AND SIDEWALK CURB RAMPS	INDEX NO.	SHEET NO.
07/01/13					304	6 of 7

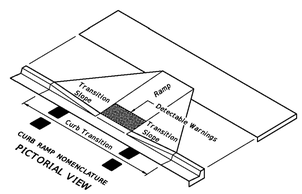

GENERAL NOTES

1. Sidewalk curb ramps shall be constructed at locations that will provide continuous unobstructed pedestrian circulation path to pedestrian areas, elements and facilities within the right of way and to accessible pedestrian routes on adjacent sites. Curbed facilities with sidewalks and those without sidewalks are to have curb ramps constructed for all intersections and turnouts with curbed returns. To accommodate curb ramps, partial curb returns are to extend to the limits prescribed in Index No. 515. Ramps constructed at locations without sidewalks are to have a landing constructed at the top of each ramp, see LANDINGS FOR CURB RAMPS WITHOUT SIDEWALKS.

2. When altering existing pedestrian facilities, where existing restricted conditions preclude the accommodation of a ramp slope of 1:12, a ramp slope between 1:12 and 1:10 is permitted for a rise of 6" maximum. Where compliance with the requirements for cross slope cannot be fully met, the minimum feasible cross slope shall be provided. Ramp slopes are not required to exceed 15' in length.

3. If sidewalk curb ramps are located where pedestrians must walk across the ramp, then provide transition slopes to the ramp; otherwise a sidewalk curb may be required.

4. All sidewalks, ramps, and landings with a cross slope of 0.02 shown in this Index are 0.02 maximum. All ramp slopes shown in this Index as 1:12 are 1:12 maximum. Landings shall have slopes less than or equal to 0.02 in any direction.

5. Grade breaks at the top and bottom of ramps shall be parallel to each other and perpendicular to the direction of the ramp slope.

6. Where a sidewalk curb ramp is constructed within existing curb, curb and gutter and/or sidewalk, the existing curb or curb and gutter shall be removed to the nearest joint beyond the curb transition or to the extent that no remaining section of curb or curb and gutter is less than 5' long. Existing sidewalks shall be removed to the nearest joint beyond the transition slope or to the extent that no remaining section of sidewalk is less than 5' long. For CONCRETE SIDEWALK details refer to Index 310.

7. Sidewalk curb ramp alpha-identifications are for reference purposes (plans, permits, etc.). Alpha-identifications CR-I and CR-J were intentionally omitted.

8. Detectable warnings shall extend the full width of the ramp and to a depth of 2'. Detectable warnings shall be constructed in accordance with Specification Section 527. For the layout of detectable warnings, refer to the TYPICAL PLACEMENT OF DETECTABLE WARNINGS details. Detectable warnings shall not be provided on transition slopes.

9. When detectable warnings are placed on a slope greater than 5%, domes shall be aligned with the centerline of the ramp; otherwise domes are not required to be aligned.

10. Detectable warnings shall be required on sidewalks at:
    a. Intersecting roads,
    b. Median Crossings greater than or equal to 6' in width,
    c. Railroad Crossings,
    d. Signalized driveways.

11. Detectable Warnings - Acceptance Criteria:
    a. Color and texture shall be complete and uniform.
    b. 90% of individual truncated domes shall be in accordance with the Americans with Disabilities Act Standards for Transportation Facilities, Section 705.
    c. There shall be no more than 4 non-compliant domes in any one square foot.
    d. Non-compliant domes shall not be adjacent to other non-compliant domes.
    e. Surfaces shall not deviate more than 0.10" from a true plane.

12. Detectable warnings shall be installed no greater than 5' from the back of curb or edge of pavement.

13. Detectable warnings shall not be installed over grade breaks.

LEGEND

Detectable Warnings

LAST REVISION	REVISION	DESCRIPTION:	FDOT 2015 DESIGN STANDARDS	DETECTABLE WARNINGS AND SIDEWALK CURB RAMPS	INDEX NO.	SHEET NO.
07/01/13					304	1 of 7

HEIDT DESIGN
Civil Engineering • Planning & GIS
Transportation Engineering
Ecological Services • Landscape Architecture
Engineering Business Certificate of Authorization No. 28782
Landscape Architecture Certificate of Authorization No. LC26000405
5806-B Breckenridge Pkwy.
Tampa, Florida 33610
Office: 813-253-5311
Fax: 813-464-7629
www.HeidtDesign.com

RANGELAND BOULEVARD
WEST EXTENSION PHASE 2

SIDEWALK DETAILS

PREPARED FOR: WS-TSR, LLC

DATE	DESCRIPTION
12/30/2015	INITIAL REVIEW SUBMITTAL

PROJECT NO:	TSR SR 1072
FILE:	SWD
DESIGN BY:	MOORE
DRAWN BY:	JONES

FLORIDA PROFESSIONAL ENGINEER

GARY D. MILLER
DATE:
REGISTRATION NO. 52717

C-706

R:\STARKEY RANCH\RANGELAND BLVD WEST EXT PHASE 2\ENGINEERING\SWD.DWG C-706 2015\12\30 9:48 AM MARK JONES

© COPYRIGHT 2015, HEIDT DESIGN, LLC. ALL RIGHTS RESERVED. NO DOCUMENTATION INCLUDING BUT NOT LIMITED TO DRAWINGS OR EXHIBITS MAY BE REPRODUCED OR TRANSMITTED IN ANY FORM OR BY ANY MEANS, ELECTRONIC OR MECHANICAL, WITHOUT THE PRIOR WRITTEN PERMISSION OF HEIDT DESIGN, LLC. IT IS HEREBY GRANTED SPECIFICALLY TO GOVERNMENTAL AGENCIES TO REPRODUCE THIS DOCUMENTATION IN COMPLIANCE WITH F.S. CHAPTER 119.

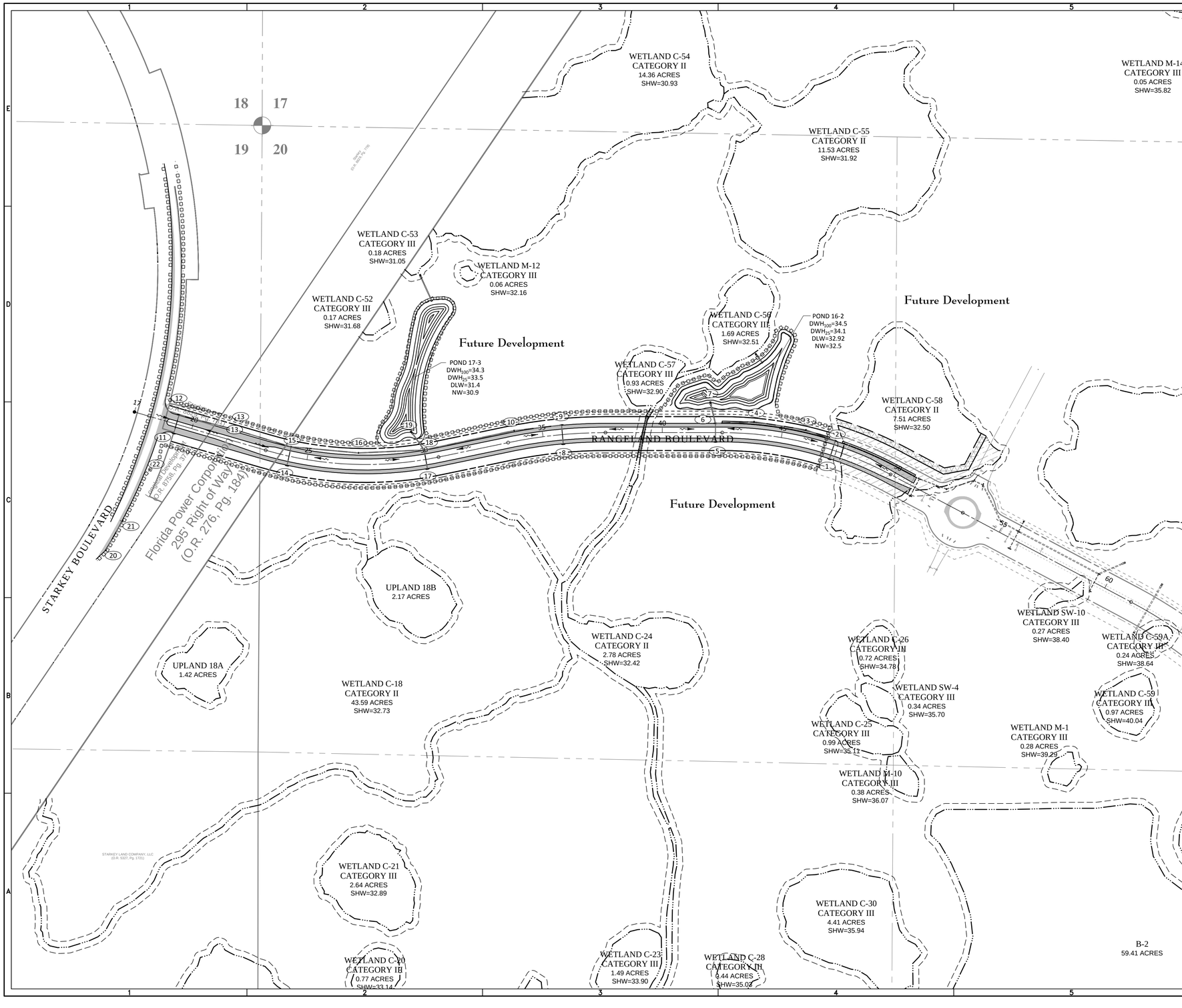

ELEVATIONS BASED ON:
NORTH AMERICAN VERTICAL DATUM 1988
CONVERSION:
NAVD 88 TO NGVD 29 = +0.85

HEIDT DESIGN
Civil Engineering • Planning & GIS
Transportation Engineering
Ecological Services • Landscape Architecture
Engineering Business Certificate of Authorization No. 28782
Landscape Architecture Certificate of Authorization No. LC26000415
5806-B Breckenridge Pkwy.
Tampa, Florida 33610
Office: 813-253-5311
Fax: 813-464-7629
www.HeidtDesign.com

RANGELAND BOULEVARD WEST EXTENSION PHASE 2
CONSTRUCTION SURFACE WATER MANAGEMENT PLAN

PREPARED FOR: WS-TSR, LLC

DATE	DESCRIPTION

DATE	DESCRIPTION
12/30/2015	INITIAL REVIEW SUBMITTAL

PROJECT NO:	TSR SR 1072
FILE:	CSWMP-01
DESIGN BY:	MOORE
DRAWN BY:	JONES

FLORIDA PROFESSIONAL ENGINEER

GARY D. MILLER
DATE:
REGISTRATION NO. 52717

C-900

R:\STARKEY RANCH\RANGELAND BLVD WEST EXT PHASE 2\ENGINEERING\CSWMP-01.DWG-C-900 2015\12\30 9:49 AM MARK JONES

© COPYRIGHT 2015, HEIDT DESIGN, LLC. ALL RIGHTS RESERVED. NO DOCUMENTATION INCLUDING BUT NOT LIMITED TO DRAWINGS OR EXHIBITS MAY BE COPIED, REPRODUCED, OR DISTRIBUTED UNLESS SPECIFIC WRITTEN PERMISSION HAS BEEN OBTAINED FROM HEIDT DESIGN, LLC. IN ADVANCE. CONSENT IS HEREBY GRANTED SPECIFICALLY TO GOVERNMENTAL AGENCIES TO REPRODUCE THIS DOCUMENTATION IN COMPLIANCE WITH F.S. CHAPTER 119.

STORM WATER POLLUTION PREVENTION PLAN

Contained on these plans and within the following notes is a storm water pollution prevention plan (swppp) which has been developed by Heidt Design, LLC in accordance with the Florida Department of Environmental Protection's (FDEP) "National Pollutant Discharge Elimination System" (NPDES) generic permit for stormwater discharge from large and small construction activities.

The following entities are identified as team members of "SWPP": Heidt Design, LLC, the developer as identified in the title box of these plans, and the site contractor and his sub-contractors. Each team member has specific responsibilities and obligations. In general, all team members, with regard to their involvement and responsibilities on the project, are to implement all necessary storm water management controls to assure compliance with the NPDES generic permit for storm water discharges from construction activities, the Southwest Florida Water Management District Permit, the applicable local governing agency (i.e. Pasco County) and the guidelines listed in the SWPP. The duties and responsibilities of the team members as they pertain to the SWPP are as follows:

HEIDT DESIGN, LLC:

A. Develop SWPP including, but not limited to, retention/detention ponds, control structures, erosion control methods and locations and stabilization criteria. This design is included within these construction plans and the following notes and instructions.

B. Submit and obtain the necessary design related storm water permits from the Florida Department of Environmental Protection, the Southwest Florida Water Management District and other applicable governmental bodies.

C. Upon notification by the developer of his intent to commence construction, submit a notice of intent to the FDEP on behalf of the developer and copy the contractor including SWPP certification and copy of the permit.

D. Submit to SWFWMD and the operator of the municipal separate storm water system, if applicable, a letter of construction commencement.

E. Complete and submit a notice of termination and certification for developer. The NOT's shall be submitted no more than 30 days after;

1. Completion of the project and final stabilization of the site or

2. When responsibility for the site has ended. Final stabilization as defined by EPA is when all soil disturbing activities at the site have been completed and a uniform (e.g. evenly distributed, without large bare areas) perennial vegetative cover with a density of 70% of the native background vegetative cover for the area has been established on all unpaved areas and areas not covered by permanent structures. As an alternative, equivalent permanent stabilization measures (such as riprap, gabions, or geotextiles) may be employed. The client shall notify Heidt Design, LLC when one of these criteria has been met.

CONTRACTOR:

A. Sign and return to Heidt a contractors certification form certifying your understanding of and willingness to comply with the Storm Water Pollution Prevention Plan no later than 48 hours prior to commencement of construction. Also, each subcontractor affected by the SWPP must certify to the contractor that they understand and shall comply with the NPDES Permit and SWPP. A record of these certifications shall be maintained by the contractor on site.

B. During construction, assure compliance with the designed Storm Water Pollution Prevention plans prepared by Heidt Design, LLC and the NPDES Generic Permit for storm water discharges from large and small construction activities.

C. Maintain a copy of the construction plans, which include the Storm Water Pollution Prevention Plan, the NOI, and all inspection reports and certifications on site.

D. Undertake all reasonable Best Management Practices (BMP's) to assure that silted or otherwise polluted storm water is not allowed to discharge from the site during all phases of construction. Stabilization BMP's that may be used include:

Temporary or permanent seeding, mulching, geotextiles, sodding, vegetative buffer strips, protection of trees and preservation of mature vegetation. Structural erosion and sediment control BMP's that may be used include: straw bale dikes, silt fences, earth dikes, brush barriers, drainage swales, check dams, subsurface drain, pipe slope drain, level spreaders, storm drain inlet protection, outlet protection, sediment traps, and temporary sediment basins. Detention ponds may also be used as temporary sediment basins. Additional BMP's that may need to be implemented include: providing protected storage areas for chemicals, paints, solvents, fertilizers, and other potentially toxic materials. Providing waste receptacles at convenient locations and providing regular collection of wastes, including building material wastes. Minimizing off-site tracking of sediments. Making adequate preparations, including training and equipment to contain spills of oil and hazardous materials. Complying with applicable state or local waste disposal, sanitary sewer or septic system regulations and the use of appropriate pollution prevention measures for allowable non-storm water components of discharge.

E. Notify Heidt Design, LLC and the developer in writing of any non-storm water pollution sources which are being stored, or otherwise used during the construction of the project, i.e., fertilizers, fuels, pesticides, other chemicals. This notification should be accompanied with the contractor's design and methods to prevent pollution run-off from these sources.

F. Develop a maintenance and inspection plan which includes, but is not limited to the following:

The specific areas to be inspected and maintained that includes all the disturbed areas and material storage areas of the site.

1. The erosion and sediment controls identified in the swppp to be maintained and inspected and those additional controls that the contractor deems necessary.

2. Maintenance procedures.

3. The procedure to follow if additional work is required or whom to call.

4. Inspections and maintenance forms.

5. The personnel assigned to each task.

The following shall be inspected a minimum of once a week or within 24 hours after 0.50 inches of rainfall:

- Stabilization measures (once a month if fully stabilized).
- Structural controls.
- Discharge points.
- Construction entrances and exits.
- Areas used for storage of exposed materials.

An inspection form shall be completed for each inspection. Any permit violations should be noted and corrective measures shall be taken no later than 7 days after the inspection occurred. If revisions to the SWPP are needed, a report form for changes in the SWPP shall be completed and a copy sent to Heidt Design, LLC the original shall be kept on-site as documentation of the change. If the inspection passes, a certification that the facility is in compliance with the SWPP and the NPDES Permit must be signed by a duly authorized representative of the principal executive official of the operator of the SWPP with one of the following qualifications:

1. Has successfully completed the Florida Stormwater, Erosion and Sediment Control Inspector Training Program.
2. Successfully completed a similar training program.
3. Has enough practical on the job training to be qualified to perform the inspections.
4. Retain inspection reports and certifications for at least three years.

H. Site stabilization measures shall be initiated as soon as practical but in no case more than 7 days, in portions of the site where construction activities have temporarily or permanently ceased.

I. Releases in excess of reportable quantities.

1. The discharge of hazardous substances or oil in the stormwater discharge(s) from a facility or activity shall be prevented or minimized in accordance with the applicable Stormwater Pollution Prevention Plan for the facility or activity. This permit does not relieve the operator of the reporting requirements of 40 cfr part 117 and 40 cfr part 302. Where a release containing a hazardous substance in an amount equal to or in excess of a reporting quantity established under either 40 cfr 117 or 40 cfr 302, occurs during a 24 hour period:

2. The operator is required to notify the State Warning Point (800-210-0519 or 850-413-9911) as soon as he or she has knowledge of the discharge;

a. The operator shall submit within 14 calendar days of knowledge of the release a written description of: the release (including the type and estimate of the amount of material released), the date that such release occurred, the circumstances leading to the release, and remedial steps to be taken, to the Florida Department of Environmental Protection, NPDES Stormwater Section, Mail Station 2500, 2600 Blair Stone Road, Tallahassee, Florida 32399-2400; and

b. The Stormwater Pollution Prevention Plan required under part V of this permit must be modified within 14 calendar days of knowledge of the release to: provide a description of the release, the circumstances leading to the release, and the date of the release. In addition, the plan must be reviewed to identify measures to prevent the reoccurrence of such releases and to respond to such releases, and the plan must be modified where appropriate.

3. This permit does not authorize the discharge of hazardous substances or oil resulting from an on-site spill.

DEVELOPER:

1. Notify Heidt of your intent to commence construction. Sign the Notice of Intent form as operator of the storm water discharge facility and permittee and return to Heidt Design, LLC.

2. Sign a certification of Storm Water Pollution Prevention Plan and return to Heidt Design, LLC.

3. Notify Heidt when it is time to submit a Notice of Termination as defined under part E of the Heidt Design, LLC section of the SWPP. Sign and return to Heidt Design, LLC for submittal to FDEP a Notice of Termination form and certification.

PRE-DEVELOPED SITE INFORMATION:

Total Site Acreage: 18.3 AC. ±

Land Use: UNDEVELOPED - AGRICULTURAL

Vegetation: RANGE LAND, BAHIA GRASS PASTURE

Receiving waters or municipal separate storm water system: ANCLOTE RIVER

2 Year/24 Hour Rainfall Depth: 4.5"

Soil Types: SELLERS, SMYRNA, MYAKKA, CASSIA, IMMOKALEE

PROJECT INFORMATION:

1. Project Type - ROADWAY

2. Anticipated Construction Sequence is as follows:

- Complete Erosion Control Installation
- Clearing and Grubbing
- Earthwork Activities
- Storm Water System Construction
- Utility Construction
- Base and Pavement Construction
- Final Stabilization

The BMP's listed in part D of the Contractor Dection of the SWPP shall be considered during all phases of construction.

3. Anticipated Start Date: 5/01/2016

4. Anticipated Completion Date: 8/15/2016

5. Total Acres Disturbed: 18.3 Ac.

6. Pre-Developed "C" Factor: 0.2

7. Post-Developed "C" Factor: 0.4

8. The Storm Water Management System, upon completion of construction and appropriate certification and as-built submittals will be operated and maintained by TSR CDD.

9. The potential source of pollution from this project is on-site development and construction activity.

GENERAL EROSION AND TURBIDITY CONTROL NOTES

1. The soil erosion and sediment control devises shall be installed prior to construction, maintained throughout construction and until the site is permanently stabilized.
2. Any off site disturbance shall be restored to the pre or better condition.
3. The Site Subcontractor shall be responsible for installation and maintenance of all erosion and turbidity controls and the quality and quantity of offsite or wetland discharges.
4. Prior to construction, the Site Subcontractor is responsible for having his dewatering plan and turbidity control plan approved by the applicable reviewing agencies. Refer to the project's permit approvals and permit conditions for agencies requiring such review and approval. Questions concerning appropriate techniques should be addressed to those agencies and/or discussed with the project engineer and owner.
5. The appropriate turbidity and erosion control methodologies selected by the Site Subcontractor for this project should be made following assessment of the plans and project site specific factors and after consultations as needed with the project engineer and appropriate agencies. The Site Subcontractor will be responsible for obtaining any and all necessary permits for such activity; several factors to consider are listed below:
   - A. Clay content in excavated materials and/or permeabilities rates
   - B. Depth of cut in ponds, trenches, or utility lines
   - C. Ambient ground water levels
   - D. Actual rainfall amounts and time of year relative to normal rainy season
   - E. Proximity to wetlands, water bodies or offsite properties
   - F. 'Class' designation of receiving water bodies (i.e., Outstanding Florida Waters, shellfish harvesting areas, etc.)
   - G. Density, type, and proximity of upland vegetation to be retained during construction (for use as possible filtration areas)
   - H. Fill height relative to natural grade and length and steepness of the proposed slopes
   - I. Existing topography and directions of surface flow
   - J. Type of equipment used
   - K. Project type
   - L. Duration of construction activities
   - M. Separation distance of onsite ponds
   - N. Ambient quality of surface and groundwater
   - O. Temporary stockpile locations and heights
4. At the onset of construction, the Site Subcontractor, as the party responsible for implementation of the erosion and sediment control plan, shall assess the above described conditions and factors with respect to relative cost effectiveness and select the appropriate methods of protection. A fairly extensive list of techniques are presented below but it must be stressed that any or all of the following may be necessary to maintain water quality and quantity standards. The construction sequencing should be thought out in advance of initiation to provide adequate protection of water quality.
5. Discharges which exceed 29 N.T.U.'s over the background levels are in violation of state water quality standards. Discharges of water quantities which affect offsite properties or may damage wetlands are also prohibited by regulating agencies.
6. The erosion and turbidity control measures shown hereon are the minimum required for agency approval. Additional control and measures may be required due to the Site Subcontractor's construction sequence & unforeseen weather conditions. Any additional measures deemed necessary by the Site Subcontractor shall be included in the lump sum bid with no extras for materials and labor allowed.
7. Hay bales or silt screens shall be installed prior to land clearing to protect water quality and to identify areas to be protected from clearing activities and maintained for the duration of the project until all soil is stabilized.
8. Floating turbidity barriers shall be in place in flowing systems or in open water lake edges prior to initiation of earthwork and maintained for the duration of the project until all soil is stabilized.
9. No clay material shall be left exposed in any stormwater storage facility. If clay or sandy-clays are encountered during stormwater storage excavation, the Site Subcontractor shall notify the Engineer immediately before proceeding with further excavation. If the Engineer of Record has determined that such soils are non-confining and must be excavated to meet permit and design conditions, excavation may proceed after obtaining written authorization from the appropriate governing agency. If said soils are left exposed at the permitted and designed depth, the Site Subcontractor shall over-excavate the pond's bottom and side slopes by a minimum of twelve (12") inches and backfill with clean sands to help prevent suspension of fine particles in the water column.
10. The installation of temporary erosion control barriers shall be coordinated with the construction of the permanent erosion control features to the extent necessary to assure effective and continuous control of erosion and water pollution throughout the life of the construction phase.
11. The type of erosion control barriers used shall be governed by the nature of the construction operation and soil type that will be exposed. Silty and clayey material may require solid sediment barriers to prevent turbid water discharge, while sandy material may need only silt screens or hay bales to prevent erosion. Floating turbidity curtains should generally be used in open water situations. Diversion ditches or swales may be required to prevent turbid stormwater runoff from being discharged to wetlands or other water bodies. It may be necessary to employ a combination of barriers, ditches, and other erosion/turbidity control measures if conditions warrant.
12. Where pumps are to be used to remove turbid waters from construction areas, the water shall be treated prior to discharge to the wetlands. Treatment methods include, for example, turbid water being pumped into grassed swales or appropriate upland vegetated areas (other than upland preservation areas and wetland buffers), sediment basins, or confined by an appropriate enclosure such as turbidity barriers or low berms, and kept confined until turbidity levels meet State Water Quality Standards.
13. The Permittee shall schedule his operations such that the area of unprotected erodible earth exposed at any one time is not larger than the minimum area necessary for efficient construction operation, and the duration of exposed, uncompleted construction to the elements shall be as short as practicable. Clearing and grubbing shall be so scheduled and performed such that grading operations can follow immediately thereafter. Grading operations shall be so scheduled and performed that permanent erosion control features can follow immediately thereafter if conditions on the project permit.
14. Water derived from various dewatering methods should be passed through sufficiently wide areas of existing upland vegetation to filter out excess turbidity. If this is not sufficient, the water shall be retained in previously constructed permanent stormwater ponds or else retained in temporary sedimentation basins until the clarity is suitable to allow for its discharge. Plugging the outfalls from completed stormwater ponds may be needed to avoid discharge. However, such situations should be monitored closely to preclude berm failure if water levels rise too high.
15. Water can be transported around the site by the use of internal swales or by pumps and pipes.
16. Sheet flow of newly filled or scraped areas may be controlled or contained by the use of brush barriers, diversion swales, interceptor ditches or low berms. Flow should be directed toward areas where sediments can sufficiently settle out.
17. Exposed soils shall be stabilized as soon as possible, especially slopes leading to wetlands. Stabilization methods include solid sod, seeding and mulching or hydromulching to provide a temporary or permanent grass cover mulch blankets, filter fabrics, etc., can be employed to provide vegetative cover.
18. Energy dissipaters (such as rip rap, a gravel bed, hay bales, etc.) shall be installed at the discharge point of pipes or swales if scouring is observed.
19. Attempt to install roadway curb and gutters as soon as possible to reduce the surface area for erosion to occur.
20. Implement storm drain inlet protection (hay bales or gravel) to limit sedimentation within the stormwater system. Perform inspections and periodic cleaning of sediments which wash out into the streets until all soil is stabilized.
21. Water discharge velocities from impounded areas and temporary sedimentation basins shall be restricted to avoid scouring in receiving areas.
22. If water clarity does not reduce to state standards rapidly enough in holding ponds, it may be possible to use chemical agents such as alum to flocculate or coagulate the sediment particles.
23. Hay bales, silt screens, or gravel beds can be added around the pipe or swale discharge points to help clarify discharges. Spreader swales may help dissipate cloudy water prior to contact with wetlands.
24. All fuel storage areas or other hazardous storage areas shall conform to accepted state or federal criteria for such containment areas.
25. Vehicle or equipment washdown areas will be sufficiently removed from wetlands or offsite areas.
26. Fugitive dust controls (primarily by using water spray trucks) shall be employed as needed to control windborn emissions.
27. If the above controls remain ineffective in precluding release of turbid water, especially during pond or utility line dewatering, then the contractor may be compelled to use a vertical dewatering system such as well points or sock drains to withdraw groundwater which may already be clear enough to allow for direct discharge to wetlands.
28. Ongoing inspections and periodic maintenance by the Site Subcontractor shall occur throughout construction as necessary to insure the above methods are working suitably. This may be needed daily, if conditions so warrant. Site Subcontractors are encouraged to obtain and thoroughly review The Florida Development Manual: A Guide to Sound Land and Water Management, which was developed by the State of Florida Department of Environmental Protection in 1988. This provides fairly in-depth discussions of recommended techniques and also provides specific design and technical standards. A copy of this document is available for review at Heidt Design, LLC.
29. The contractor will perform daily inspections of all on-site wetlands within the construction area to ensure that water levels within those wetlands are not excessively impounded prior to the time when the permitted control structure or outfall is built. Water levels significantly above normal should be corrected at a frequency that prevents a change in the vegetative character or health of any wetlands.
30. Prior to commencement of clearing & grubbing or any soil disturbance, contractor shall coordinate with Heidt Design to schedule a pre-construction soil erosion and sediment control inspection with the Pasco County Stormwater Management Division.
31. The requirements listed above shall be considered minimum requirements and the contractor shall use whatever methods he deems necessary to prevent turbidity and siltation as may be required for the project.

SIDEWALK NOTE:

1. Sidewalks shall be constructed of natural or colored concrete at lease 3,000 psi in strength, fiber reinforced on a compacted and non-yielding subgrade with minimum of four inches in thickness. When a sidewalk is crossed by a driveway, the minimum thickness shall be 6 inches.
2. Refer to sidewalk clear zone detail below:

POND/LAKE EXCAVATION NOTE:

No excavation shall extend below the permitted design depths/elevations shown on the drawings, unless additional testing supports otherwise and the Engineer of Record has received verbal and/or written permission from the Water Management District. No lower semi-confining unit clayey soil material and/or no limestone materials shall be excavated, regardless if these materials are encountered within the permitted excavation depths/elevations. If any lower semi-confining unit clayey soil materials or limestone materials are encountered above the permitted depths/elevations, then excavation operations shall cease in the general area and the Engineer of Record shall be notified immediately.

WETLAND NOTES:

There are no wetland impacts proposed and therefore, no mitigation required.

"Conservation Area" designation is given to all protected wetlands per Pasco County requirements. They are not designated as "Conservation Easements" for SWFWMD compensation.

Wetland lines permitted under ERP No. 43028893.006

OWNER'S INSTRUCTIONS FOR MAINTENANCE AND INSPECTION OF STORMWATER FILTER FACILITIES

It is T.S.R. CDD's responsibility to inspect and maintain the water drainage systems on a routine basis to ensure that they are functioning properly. Inspections can be on an annual or semi-annual basis, but should always be conducted following major storms. Systems that incorporate infiltration are most critical since poor maintenance practices can soon render them inefficient. Visual inspections of sand filters, control structures, and outfall pipes are highly recommended. It should be stressed that good records should be kept on all maintenance operations to help plan future work and identify facilities requiring attention.

Sand filter surfaces are sometimes scarified or break up silt deposits and restore porosity. This should be accomplished after all sediment has been removed from the surface. After removing large debris (cups, paper, wood, etc.) it is recommended that raking the top 3" will properly scarify the surface or it may be required to replace the sand. Another technique requires removing the sand for washing.

The filter system is designed to have a wet-dry cycle to inhibit algae or bacterial growth. Cleanout frequency of filter beds will depend on whether they are vegetated or non-vegetated and will be a function of their storage capacity, infiltration characteristics, volume of inflow, and sediment load. Filter beds should be inspected closely at least once a year.

Perforated underdrain pipes are located 2' below the sand and cleanouts are located at the end of the system. In the even of sediment build-up in the underdrain pipe, cleaning can be accomplished throught the cleanout with several of the techniques outlined below.

Methods and equipment for cleanout of systems various types of equipment are available commercially for maintenance of drainage systems. The most frequently used equipment and techniques are listed below.

1. Vacuum Pump:
   This device is normally used to remove sediment from sumps and pipes. The equipment for this system is generally mounted on a vehicle. It requires a 200 - 300 gallon (0.757 - 1.36m) holding tank and a vacuum pump that has a 10" (254mm) diameter flexible hose with a serrated metal end for breaking up cake sediment. A two-man crew can clean a catch basin in 5 to 10 minutes. this system can remove stones, bricks, leaves, litter and sediment deposits. Normal working depth is 0' - 20' (0 to 6m).

2. Water Jet Spray:
   This equipment is generally mounted on a self-contained vehicle with a high pressure pump and a 200 - 300 gallons (0.760 to 1.140m) water supply. A 3" (76mm) flexible hose line with a metal nozzle that directs jets of water at a reverse angle, which propels the nozzle forward while blasting debris backwards toward the catch basin. As the hose line is reeled in, the jetting action forces all debris to the catch basin where it is removed by the vacuum pump equipment. Normal length of hose is approximately 200' (61m). Because of the energy supplied by the water jet, it should not be used to clean erodible trench walls.

ELEVATIONS BASED ON:
NORTH AMERICAN VERTICAL DATUM 1988
CONVERSION:
NAVD 88 TO NGVD 29 = +0.85

HEIDT DESIGN
Civil Engineering • Planning & GIS
Transportation Engineering
Ecological Services • Landscape Architecture
Engineering Business Certificate of Authorization No. 28782
Landscape Architecture Certificate of Authorization No. LC26000405
5806-B Breckenridge Pkwy.
Tampa, Florida 33610
Office: 813-253-5311
Fax: 813-464-7629
www.HeidtDesign.com

RANGELAND BOULEVARD WEST EXTENSION PHASE 2
CONSTRUCTION SURFACE WATER MANAGEMENT PLAN - NOTES

PREPARED FOR: WS-TSR, LLC

NO.	DATE	DESCRIPTION
1	12/30/2015	INITIAL REVIEW SUBMITTAL

PROJECT NO:	TSR SR 1072
FILE:	CSWMP-02
DESIGN BY:	MOORE
DRAWN BY:	JONES

FLORIDA PROFESSIONAL ENGINEER

GARY D. MILLER
DATE:____________
REGISTRATION NO. 52717

C-901

R:\STARKEY RANCH\RANGELAND BLVD WEST EXT PHASE 2\ENGINEERING\CSWMP-02.DWG-C-901 2015/12/30 9:49 AM MARK JONES

© COPYRIGHT 2015, HEIDT DESIGN, LLC. ALL RIGHTS RESERVED. NO DOCUMENTATION (INCLUDING BUT NOT LIMITED TO DRAWINGS OR EXHIBITS) MAY BE COPIED, REPRODUCED, OR DISTRIBUTED UNLESS SPECIFIC WRITTEN PERMISSION HAS BEEN OBTAINED FROM HEIDT DESIGN, LLC. IN ADVANCE. CONSENT IS HEREBY GRANTED SPECIFICALLY TO GOVERNMENTAL AGENCIES TO REPRODUCE THIS DOCUMENTATION IN COMPLIANCE WITH F.S. CHAPTER 119.

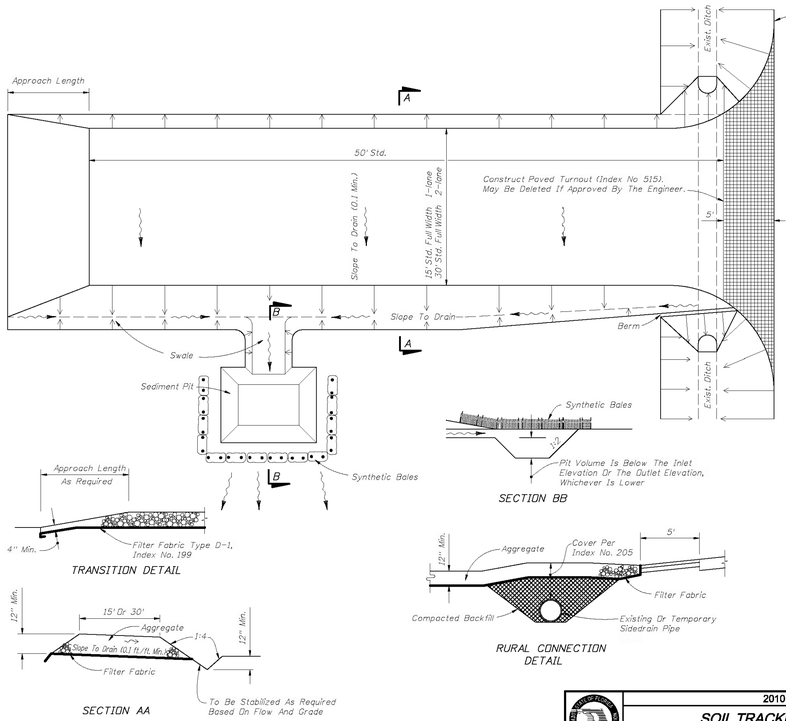

GENERAL NOTES

1. A Soil Tracking Prevention Device (STPD) shall be constructed at locations designated by the engineer for points of egress from unstabilized areas of the project to public roads where off-site tracking of mud could occur. Traffic from unstabilized areas of the construction project shall be directed thru a STPD. Barriers, flagging, or other positive means shall be used as required to limit and direct vehicular egress across the STPD.
2. The Contractor may propose an alternative technique to minimize off-site tracking of sediment. The alternative must be reviewed and approved by the Engineer prior to its use.
3. All materials spilled, dropped, or tracked onto public roads (including the STPD aggregate and construction mud) shall be removed daily, or more frequently if so directed by the Engineer.
4. Aggregates shall be as described in Section 901 excluding 901-2.3. Aggregates shall be FDOT size #1. If this size is not available, the next available smaller size aggregate may be substituted with the approval of the Engineer. Sizes containing excessive small aggregate will track off the project and are unsuitable.
5. The sediment pit should provide a retention volume of 3600 cubic feet/acre of surface area draining to the pit.
   When the STPD is isolated from other drainage areas, the following pit volumes will satisfy this requirement:
   15' x 50'=100 ft.^{3} 30' x 50'=200 ft.^{3}
   As an option to the sediment pit, the width of the swale bottom can be increased to obtain the volume. When the sediment pit or swale volume has been reduced to one half, it shall be cleaned. When a swale is used, synthetic bales or silt fence shall be placed along the entire length.
6. The swale ditch draining the STPD shall have a 0.02% minimum and a 1.0% maximum grade along the STPD and to the sediment pit.
7. Mitered end sections are not required when the sidedrain pipe satisfies the clear zone requirements.
8. The STPD shall be maintained in a condition that will allow it to perform its function. To prevent off-site tracking, the STPD shall be rinsed (daily when in use) to move accumulated mud downward thru the stone. Additional stabilization of the vehicular route leading to the STPD may be required to limit the mud tracked.
9. A STPD shall be paid for under the contract unit price for Soil Tracking Prevention Device, EA. The unit price shall constitute full compensation for construction, maintenance, replacement of materials, removal, and restoration of the area utilized for the STPD; including but not limited to excavation, grading, temporary pipe (including MES when required), filter fabric, aggregate, paved turnout (including asphalt and base construction), ditch stabilization, approach route stabilization, sediment removal and disposal, water, rinsing and cleaning of the STPD and cleaning of public roads, grassing and sod. Synthetic Bale or Bale Type Barrier shall be paid for under the contract unit price for Synthetic Bales, LF. Silt fence shall be paid for under the contract unit price for Staked Silt Fence, LF.
10. The nominal size of a standard STPD is 15' x 50' unless otherwise shown in the plans. If the volume of entering and existing vehicles warrant, a 30' width STPD may be used if approved by the Engineer. When a double width (30') STPD is used, the pay quantity shall be 2 for each location.

2010 FDOT Design Standards	Last Revision	Sheet No.
SOIL TRACKING PREVENTION DEVICE TYPE A	07/01/07	1 of 1
	Index No.	106

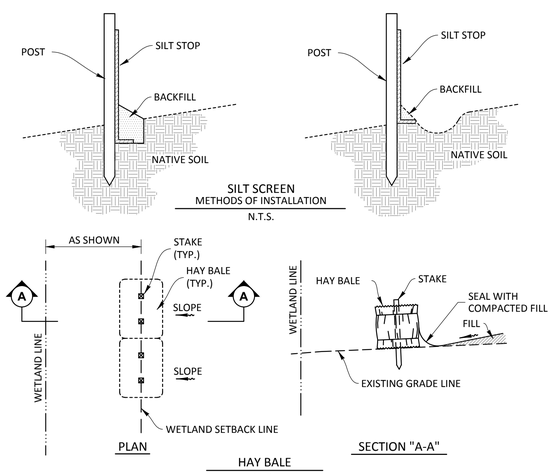

EROSION CONTROL DETAILS

EITHER METHOD OR A COMBINATION OF BOTH IS ACCEPTABLE

NOTE:
THE EROSION BARRIERS, AS SHOWN, ARE NOT TO BE CONSTRUED TO MEAN THAT THEY ARE ALL THAT MAY BE REQUIRED. THE CONTRACTOR IS TO TAKE WHATEVER MEASURES NECESSARY TO CONTROL EROSION THROUGHOUT THE PROJECT.

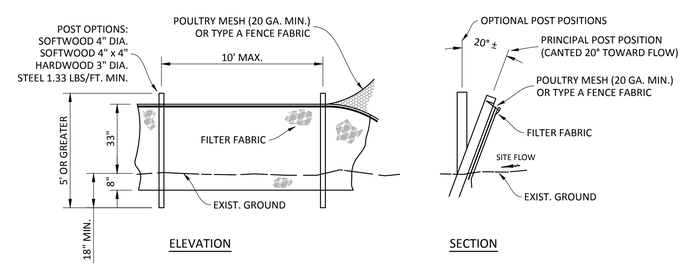

TYPE IV SILT FENCE

N.T.S.

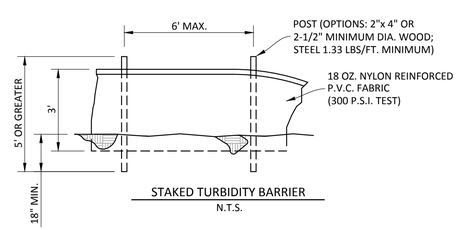

STAKED TURBIDITY BARRIER

N.T.S.

HEIDT DESIGN
Civil Engineering • Planning & GIS
Transportation Engineering
Ecological Services • Landscape Architecture
Engineering Business Certificate of Authorization No. 28782
Landscape Architecture Certificate of Authorization No. LC26000405
5806-B Breckenridge Pkwy.
Tampa, Florida 33610
Office: 813-253-5311
Fax: 813-464-7629
www.HeidtDesign.com

RANGELAND BOULEVARD
WEST EXTENSION PHASE 2

CONSTRUCTION SURFACE WATER MANAGEMENT PLAN - DETAILS

PREPARED FOR: WS-TSR, LLC

DATE	DESCRIPTION

DATE:	DESCRIPTION
1 12/30/2015	INITIAL REVIEW SUBMITTAL

PROJECT NO:	TSR SR 1072
FILE:	CSWMP-03
DESIGN BY:	MOORE
DRAWN BY:	JONES

FLORIDA PROFESSIONAL ENGINEER

GARY D. MILLER
DATE:
REGISTRATION NO. 52717

C-902

R:\STARKEY RANCH\RANGELAND BLVD WEST EXT PHASE 2\ENGINEERING\CSWMP-03.DWG-C-902 2015\12\30 9:49 AM MARK JONES

© COPYRIGHT 2015, HEIDT DESIGN, LLC. ALL RIGHTS RESERVED. NO DOCUMENTATION (INCLUDING BUT NOT LIMITED TO DRAWINGS) OR EXHIBITS MAY BE CONVERTED TO ANOTHER FORMAT, ALTERED, REPRODUCED, OR DISTRIBUTED TO ANYONE OTHER THAN THE PROPER GOVERNMENTAL AGENCIES. IT IS HEREBY GRANTED SPECIFICALLY TO GOVERNMENTAL AGENCIES TO REPRODUCE THIS DOCUMENTATION IN COMPLIANCE WITH F.S. CHAPTER 119.

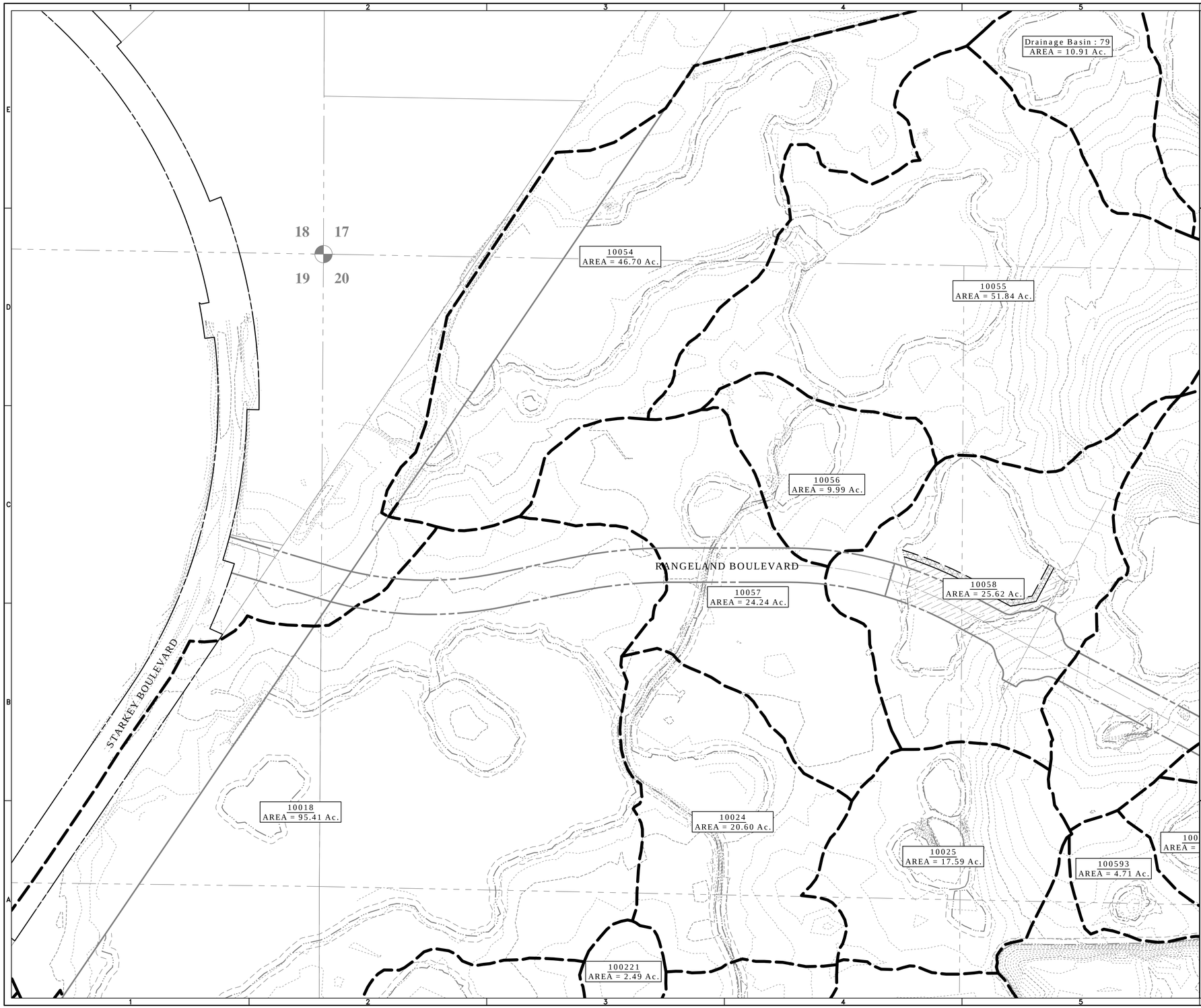

N

0 200 400

GRAPHIC SCALE: 1" = 200'

ELEVATIONS BASED ON:
NORTH AMERICAN VERTICAL DATUM 1988
CONVERSION:
NAVD 88 TO NGVD 29 = +0.85

GENERAL LEGEND

- WETLAND LINE
- WETLAND CONS. AREA SETBACK
- 12" Oak — EXISTING TREE TO BE REMOVED
- 12" Oak — EXISTING TREE TO BE PROTECTED
- PROPOSED TREE BARRICADE
- STAKED EROSION CONTROL
- FLOODPLAIN LIMITS
- C-610 — PLAN & PROFILE SHEET NUMBER

DRAINAGE LEGEND

EXISTING	PROPOSED	
		STORM DRAINAGE STRUCTURE & PIPE
10	10	STRUCTURE NO.
+15.0	15.00	SPOT ELEVATION GROUND
+15.00	15.00	SPOT ELEVATION PAVEMENT
	15.00 / 14.50	TOP OF CURB / SIDEWALK EDGE OF PAVEMENT
	15.00	PROFILE GRADE ELEVATION REFERENCE
15	15.0	CONTOUR
		DIRECTION OF SURFACE FLOW
UDCO	UDCO	UNDERDRAIN WITH CLEANOUT
		STAKED EROSION CONTROL
	AB#	SOIL BORING LOCATION
	1.00 AC.	MAJOR DRAINAGE AREA ACREAGE
		MAJOR DRAINAGE AREA
	0.10 AC.	MINOR DRAINAGE AREA ACREAGE
		MINOR DRAINAGE AREA

HEIDT DESIGN
Civil Engineering • Planning & GIS
Transportation Engineering
Ecological Services • Landscape Architecture
Engineering Business Certificate of Authorization No. 28782
Landscape Architecture Certificate of Authorization No. LC26000415
5806-B Breckenridge Pkwy.
Tampa, Florida 33610
Office: 813-253-5311
Fax: 813-464-7629
www.HeidtDesign.com

RANGELAND BOULEVARD WEST EXTENSION PHASE 2
PRE-DEVELOPMENT DRAINAGE AREA MAP

PREPARED FOR: WS-TSR, LLC

DATE	DESCRIPTION

DATE	DESCRIPTION
12/30/2015	INITIAL REVIEW SUBMITTAL

PROJECT NO:	TSR SR 1072
FILE:	DA-PRE
DESIGN BY:	MOORE
DRAWN BY:	JONES

FLORIDA PROFESSIONAL ENGINEER

GARY D. MILLER
DATE:
REGISTRATION NO. 52717

C-903

R:\STARKEY RANCH\RANGELAND BLVD WEST EXT PHASE 2\ENGINEERING\DA-PRE.DWG-C-903 2015\12\30 9:49 AM MARK JONES

© COPYRIGHT 2015, HEIDT DESIGN, LLC. ALL RIGHTS RESERVED. NO DOCUMENTATION (INCLUDING BUT NOT LIMITED TO DRAWINGS OR EXHIBITS) MAY BE COPIED, REPRODUCED, OR DISTRIBUTED UNLESS SPECIFIC WRITTEN PERMISSION HAS BEEN OBTAINED FROM HEIDT DESIGN, LLC. IN ADVANCE. CONSENT IS HEREBY GRANTED SPECIFICALLY TO GOVERNMENTAL AGENCIES TO REPRODUCE THIS DOCUMENTATION IN COMPLIANCE WITH F.S. CHAPTER 119.

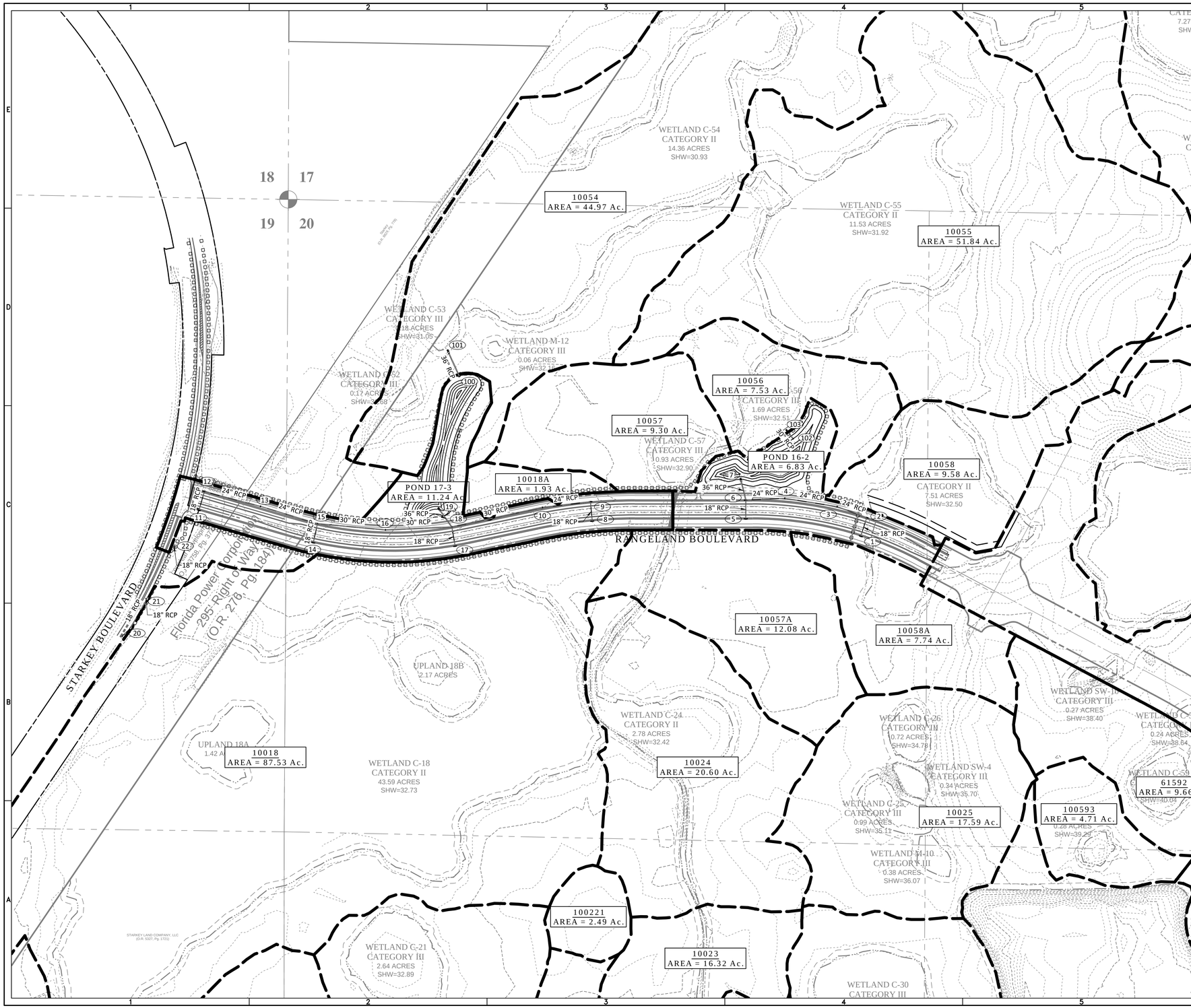

N

0 200 400

GRAPHIC SCALE: 1" = 200'

ELEVATIONS BASED ON:
NORTH AMERICAN VERTICAL DATUM 1988
CONVERSION:
NAVD 88 TO NGVD 29 = +0.85

GENERAL LEGEND

- WETLAND LINE
- WETLAND CONS. AREA SETBACK
- 12" Oak — EXISTING TREE TO BE REMOVED
- 12" Oak — EXISTING TREE TO BE PROTECTED
- PROPOSED TREE BARRICADE
- STAKED EROSION CONTROL
- FLOODPLAIN LIMITS
- C-510 — PLAN & PROFILE SHEET NUMBER

DRAINAGE LEGEND

EXISTING	PROPOSED	
		STORM DRAINAGE STRUCTURE & PIPE
10	10	STRUCTURE NO.
+15.0	15.00	SPOT ELEVATION GROUND
+15.00	15.00	SPOT ELEVATION PAVEMENT
	15.00 / 14.50	TOP OF CURB / SIDEWALK EDGE OF PAVEMENT
	15.00	PROFILE GRADE ELEVATION REFERENCE
15	15.0	CONTOUR
		DIRECTION OF SURFACE FLOW
UDCO	UDCO	UNDERDRAIN WITH CLEANOUT
		STAKED EROSION CONTROL
	AB#	SOIL BORING LOCATION
	1.00 AC.	MAJOR DRAINAGE AREA ACREAGE
		MAJOR DRAINAGE AREA
	0.10 AC.	MINOR DRAINAGE AREA ACREAGE
		MINOR DRAINAGE AREA

HEIDT DESIGN
Civil Engineering • Planning & GIS
Transportation Engineering
Ecological Services • Landscape Architecture
Engineering Business Certificate of Authorization No. 28782
Landscape Architecture Certificate of Authorization No. LC26000415

5806-B Breckenridge Pkwy.
Tampa, Florida 33610
Office: 813-253-5311
Fax: 813-464-7629
www.HeidtDesign.com

RANGELAND BOULEVARD WEST EXTENSION PHASE 2
POST DEVELOPMENT DRAINAGE AREA MAP

PREPARED FOR: WS-TSR, LLC

DATE	DESCRIPTION

DATE	DESCRIPTION
12/30/2015	INITIAL REVIEW SUBMITTAL

PROJECT NO:	TSR SR 1072
FILE:	DA-POST
DESIGN BY:	MOORE
DRAWN BY:	JONES

FLORIDA PROFESSIONAL ENGINEER

GARY D. MILLER
DATE:
REGISTRATION NO. 52717

C-904

R:\STARKEY RANCH\RANGELAND BLVD WEST EXT PHASE 2\ENGINEERING\DA-POST.DWG-C-904-2015\12\30 9:50 AM MARK JONES

© COPYRIGHT 2015, HEIDT DESIGN, LLC. ALL RIGHTS RESERVED. NO DOCUMENTATION, INCLUDING BUT NOT LIMITED TO DRAWINGS OR EXHIBITS MAY BE COPIED, REPRODUCED, OR DISTRIBUTED UNLESS SPECIFIC WRITTEN PERMISSION HAS BEEN OBTAINED FROM HEIDT DESIGN LLC. IN ADVANCE. CONSENT IS HEREBY GRANTED SPECIFICALLY TO GOVERNMENTAL AGENCIES TO REPRODUCE THIS DOCUMENTATION IN COMPLIANCE WITH F.S. CHAPTER 119.

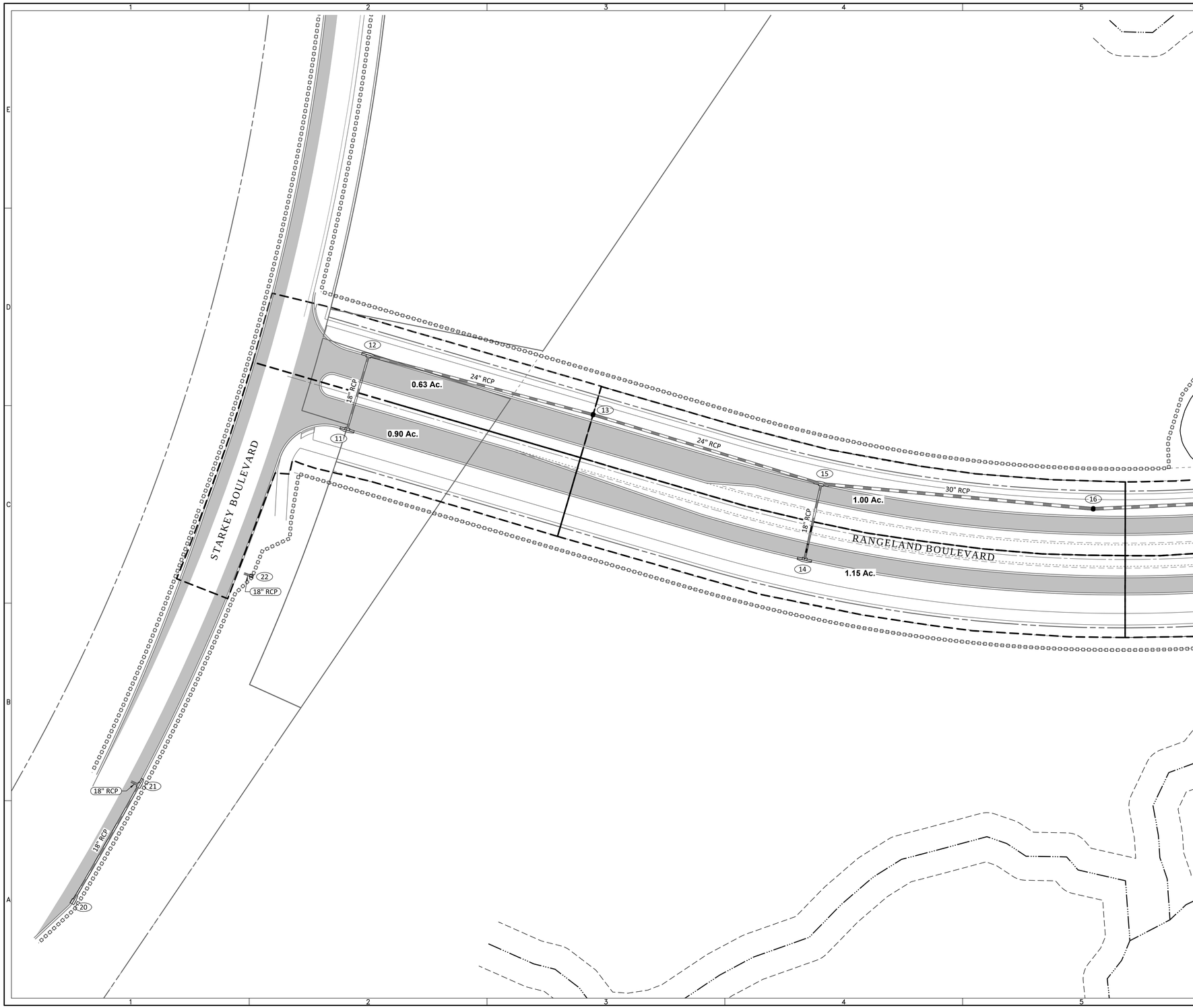

N

0 50 100

GRAPHIC SCALE: 1" = 50'

ELEVATIONS BASED ON:
NORTH AMERICAN VERTICAL DATUM 1988
CONVERSION:
NAVD 88 TO NGVD 29 = +0.85

GENERAL LEGEND

	WETLAND LINE
	WETLAND CONS. AREA SETBACK
12" Oak	EXISTING TREE TO BE REMOVED
12" Oak	EXISTING TREE TO BE PROTECTED
	PROPOSED TREE BARRICADE
	STAKED EROSION CONTROL
	FLOODPLAIN LIMITS
C-510	PLAN & PROFILE SHEET NUMBER

DRAINAGE LEGEND

EXISTING	PROPOSED	
		STORM DRAINAGE STRUCTURE & PIPE
10	10	STRUCTURE NO.
+15.0	15.00	SPOT ELEVATION GROUND
+15.00	15.00	SPOT ELEVATION PAVEMENT
	15.00 / 14.50	TOP OF CURB / SIDEWALK EDGE OF PAVEMENT
	15.00	PROFILE GRADE ELEVATION REFERENCE
15 / 15.0	15.0	CONTOUR
		DIRECTION OF SURFACE FLOW
UDCO	UDCO	UNDERDRAIN WITH CLEANOUT
		STAKED EROSION CONTROL
	AB#	SOIL BORING LOCATION
	1.00 AC.	MAJOR DRAINAGE AREA ACREAGE
		MAJOR DRAINAGE AREA
	0.10 AC.	MINOR DRAINAGE AREA ACREAGE
		MINOR DRAINAGE AREA

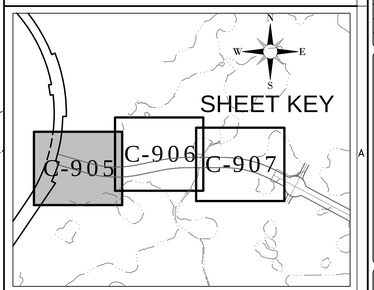

HEIDT DESIGN
Civil Engineering • Planning & GIS
Transportation Engineering
Ecological Services • Landscape Architecture
Engineering Business Certificate of Authorization No. 28782
Landscape Architecture Certificate of Authorization No. LC26000415
5806-B Breckenridge Pkwy.
Tampa, Florida 33610
Office: 813-253-5311
Fax: 813-464-7629
www.HeidtDesign.com

RANGELAND BOULEVARD WEST EXTENSION PHASE 2

DRAINAGE AREA SUB-BASIN MAP

PREPARED FOR: WS-TSR, LLC

DATE	DESCRIPTION

DATE	DESCRIPTION
12/30/2015	INITIAL REVIEW SUBMITTAL

PROJECT NO:	TSR SR 1072
FILE:	DA
DESIGN BY:	MOORE
DRAWN BY:	JONES

FLORIDA PROFESSIONAL ENGINEER

GARY D. MILLER
DATE:
REGISTRATION NO. 52717

C-905

R:\STARKEY RANCH\RANGELAND BLVD WEST EXT PHASE 2\ENGINEERING\DA\DWG-C-905 2015\12\30 9:50 AM MARK JONES

© COPYRIGHT 2015, HEIDT DESIGN, LLC. ALL RIGHTS RESERVED. NO DOCUMENTATION INCLUDING BUT NOT LIMITED TO DRAWINGS OR EXHIBITS MAY BE COPIED, REPRODUCED, OR DISTRIBUTED UNLESS SPECIFIC WRITTEN PERMISSION HAS BEEN OBTAINED FROM HEIDT DESIGN, LLC. IN ADVANCE. CONSENT IS HEREBY GRANTED SPECIFICALLY TO GOVERNMENTAL AGENCIES TO REPRODUCE THIS DOCUMENTATION IN COMPLIANCE WITH F.S. CHAPTER 119.

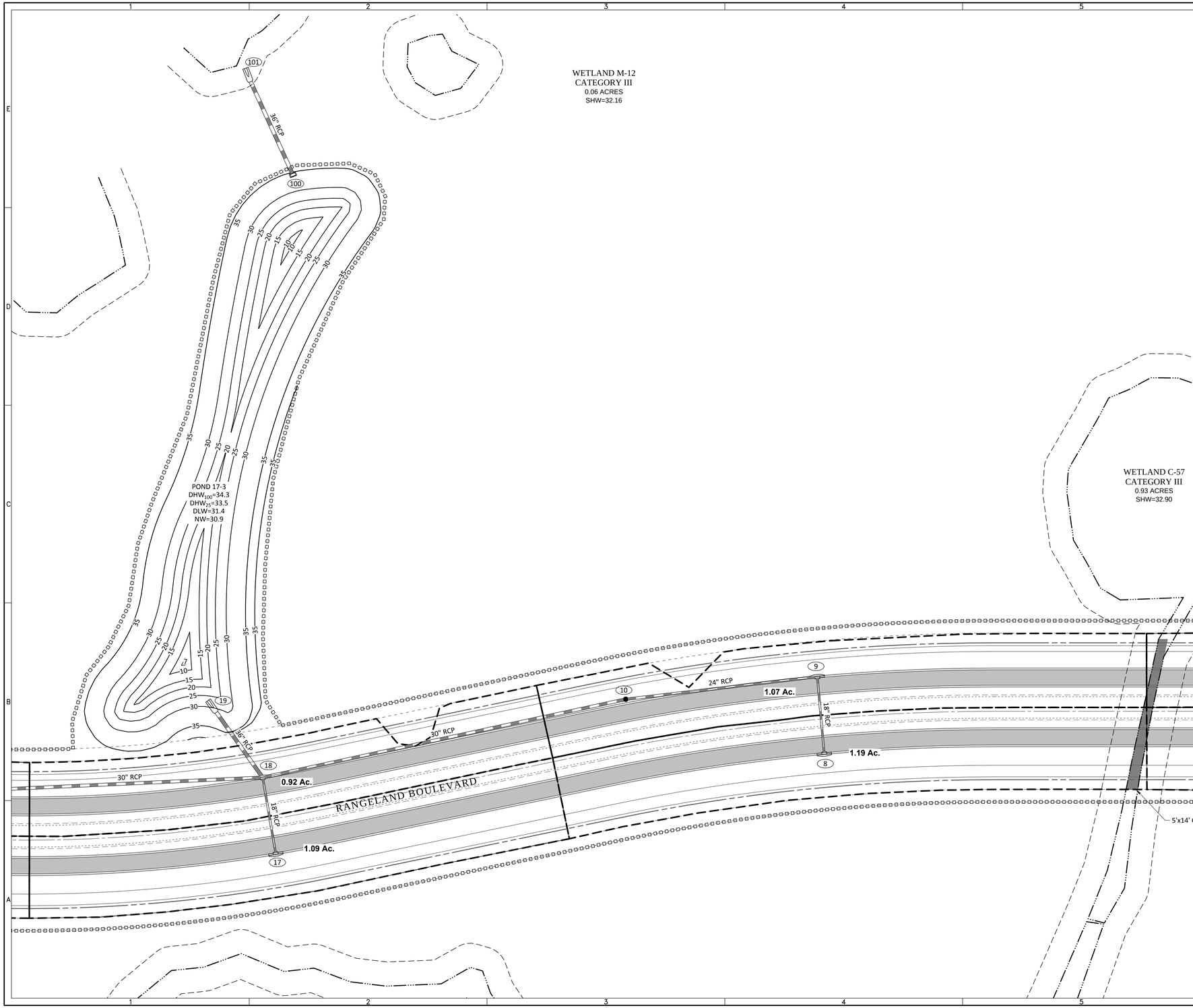

N

0 50 100

GRAPHIC SCALE: 1" = 50'

ELEVATIONS BASED ON:
NORTH AMERICAN VERTICAL DATUM 1988
CONVERSION:
NAVD 88 TO NGVD 29 = +0.85

GENERAL LEGEND

	WETLAND LINE
	WETLAND CONS. AREA SETBACK
12" Oak	EXISTING TREE TO BE REMOVED
12" Oak	EXISTING TREE TO BE PROTECTED
	PROPOSED TREE BARRICADE
	STAKED EROSION CONTROL
	FLOODPLAIN LIMITS
C-510	PLAN & PROFILE SHEET NUMBER

DRAINAGE LEGEND

EXISTING	PROPOSED	
		STORM DRAINAGE STRUCTURE & PIPE
10	10	STRUCTURE NO.
+15.0	15.00	SPOT ELEVATION GROUND
+15.00	15.00	SPOT ELEVATION PAVEMENT
	15.00 / 14.50	TOP OF CURB / SIDEWALK EDGE OF PAVEMENT
	15.00	PROFILE GRADE ELEVATION REFERENCE
15 15.0	15.0	CONTOUR
		DIRECTION OF SURFACE FLOW
UDCO	UDCO	UNDERDRAIN WITH CLEANOUT
		STAKED EROSION CONTROL
AB#		SOIL BORING LOCATION
	1.00 AC.	MAJOR DRAINAGE AREA ACREAGE
		MAJOR DRAINAGE AREA
0.10 AC.		MINOR DRAINAGE AREA ACREAGE
		MINOR DRAINAGE AREA

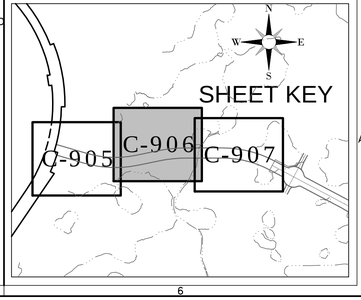

HEIDT DESIGN
Civil Engineering • Planning & GIS
Transportation Engineering
Ecological Services • Landscape Architecture
Engineering Business Certificate of Authorization No. 28782
Landscape Architecture Certificate of Authorization No. LC26000415
5806-B Breckenridge Pkwy.
Tampa, Florida 33610
Office: 813-253-5311
Fax: 813-464-7629
www.HeidtDesign.com

RANGELAND BOULEVARD WEST EXTENSION PHASE 2

DRAINAGE AREA SUB-BASIN MAP

PREPARED FOR: WS-TSR, LLC

DATE	DESCRIPTION

DATE	DESCRIPTION
12/30/2015	INITIAL REVIEW SUBMITTAL

PROJECT NO:	TSR SR 1072
FILE:	DA
DESIGN BY:	MOORE
DRAWN BY:	JONES

FLORIDA PROFESSIONAL ENGINEER

GARY D. MILLER
DATE:
REGISTRATION NO. 52717

C-906

R:\STARKEY RANCH\RANGELAND BLVD WEST EXT PHASE 2\ENGINEERING\DA\DWG-C-906 2015\12\30\ 9:50 AM MARK JONES

© COPYRIGHT 2015, HEIDT DESIGN, LLC. ALL RIGHTS RESERVED. NO DOCUMENTATION INCLUDING BUT NOT LIMITED TO DRAWINGS OR EXHIBITS MAY BE COPIED, REPRODUCED OR DISTRIBUTED UNLESS SPECIFIC WRITTEN PERMISSION HAS BEEN OBTAINED FROM HEIDT DESIGN, LLC. IN ADVANCE. CONSENT IS HEREBY GRANTED SPECIFICALLY TO GOVERNMENTAL AGENCIES TO REPRODUCE THIS DOCUMENTATION IN COMPLIANCE WITH F.S. CHAPTER 119.

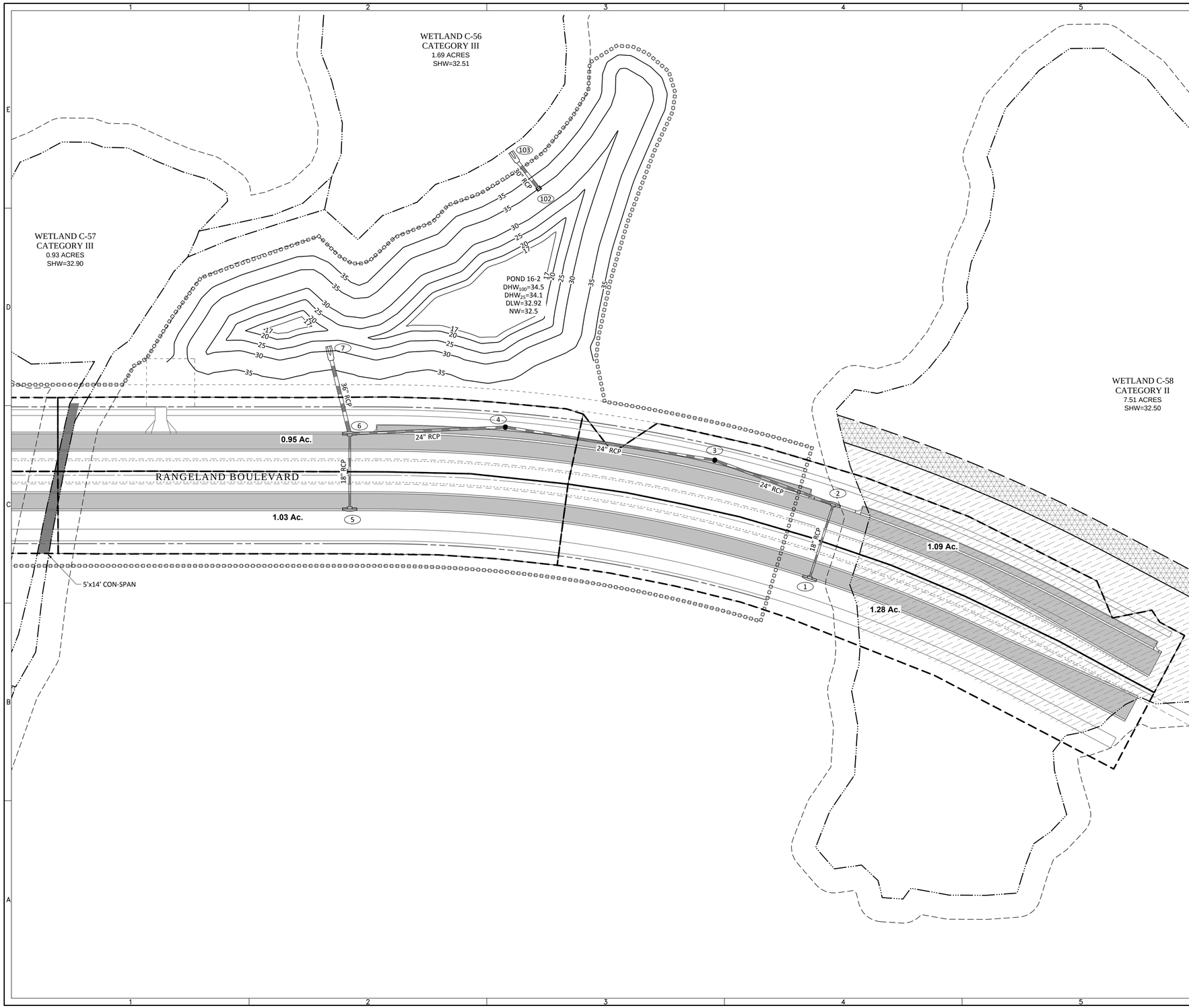

N

0 50 100

GRAPHIC SCALE: 1" = 50'

ELEVATIONS BASED ON:
NORTH AMERICAN VERTICAL DATUM 1988
CONVERSION:
NAVD 88 TO NGVD 29 = +0.85

GENERAL LEGEND

- WETLAND LINE
- WETLAND CONS. AREA SETBACK
- 12" Oak — EXISTING TREE TO BE REMOVED
- 12" Oak — EXISTING TREE TO BE PROTECTED
- PROPOSED TREE BARRICADE
- STAKED EROSION CONTROL
- FLOODPLAIN LIMITS
- C-610 — PLAN & PROFILE SHEET NUMBER

DRAINAGE LEGEND

EXISTING	PROPOSED	
		STORM DRAINAGE STRUCTURE & PIPE
10	10	STRUCTURE NO.
+15.0	15.00	SPOT ELEVATION GROUND
+15.00	15.00	SPOT ELEVATION PAVEMENT
	15.00 / 14.50	TOP OF CURB / SIDEWALK EDGE OF PAVEMENT
	15.00	PROFILE GRADE ELEVATION REFERENCE
15	15.0	CONTOUR
		DIRECTION OF SURFACE FLOW
UDCO	UDCO	UNDERDRAIN WITH CLEANOUT
		STAKED EROSION CONTROL
	AB#	SOIL BORING LOCATION
	1.00 AC.	MAJOR DRAINAGE AREA ACREAGE
		MAJOR DRAINAGE AREA
	0.10 AC.	MINOR DRAINAGE AREA ACREAGE
		MINOR DRAINAGE AREA

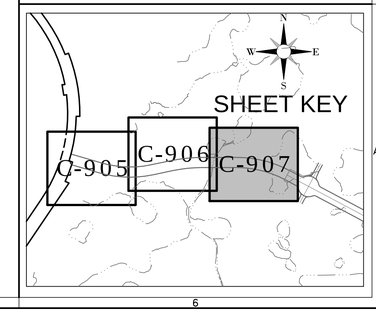

HEIDT DESIGN
Civil Engineering • Planning & GIS
Transportation Engineering
Ecological Services • Landscape Architecture
Engineering Business Certificate of Authorization No. 28782
Landscape Architecture Certificate of Authorization No. LC26000415
5806-B Breckenridge Pkwy.
Tampa, Florida 33610
Office: 813-253-5311
Fax: 813-464-7629
www.HeidtDesign.com

RANGELAND BOULEVARD WEST EXTENSION PHASE 2

DRAINAGE AREA SUB-BASIN MAP

PREPARED FOR: WS-TSR, LLC

DATE	DESCRIPTION

DATE	DESCRIPTION
12/30/2015	INITIAL REVIEW SUBMITTAL

PROJECT NO:	TSR SR 1072
FILE:	DA
DESIGN BY:	MOORE
DRAWN BY:	JONES

FLORIDA PROFESSIONAL ENGINEER

GARY D. MILLER
DATE:
REGISTRATION NO. 52717

C-907

R:\STARKEY RANCH\RANGELAND BLVD WEST EXT PHASE 2\ENGINEERING\DA\DWG-C-907 2015\12\30 9:50 AM MARK JONES

© COPYRIGHT 2015, HEIDT DESIGN, LLC. ALL RIGHTS RESERVED. NO DOCUMENTATION INCLUDING BUT NOT LIMITED TO DRAWINGS OR EXHIBITS MAY BE COPIED, REPRODUCED, OR DISTRIBUTED UNLESS SPECIFIC WRITTEN PERMISSION HAS BEEN OBTAINED FROM HEIDT DESIGN, LLC. IN ADVANCE. CONSENT IS HEREBY GRANTED SPECIFICALLY TO GOVERNMENTAL AGENCIES TO REPRODUCE THIS DOCUMENTATION IN COMPLIANCE WITH F.S. CHAPTER 119.

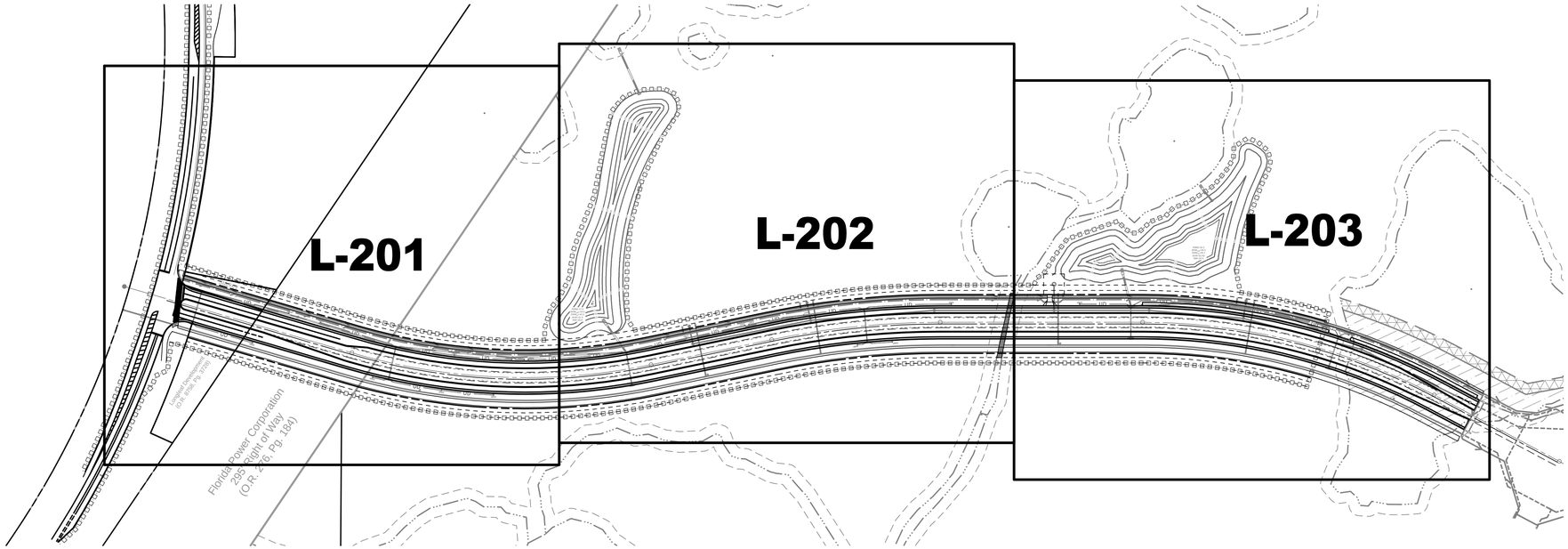

N
NOT TO SCALE

TREE INVENTORY

TREES ON SITE - TOTAL # OF INCHES

Live Oaks			Other Trees Also Note Type			
Size (Inches)	No.	Total Inches-	Type	Size (Inches)	No.	Total Inches-
10	7	70	Laurel Oak	10	1	10
11	7	77	Slash Pine	10	17	170
12	4	48	SlashPine	11	19	209
15	1	15	Laurel Oak	12	1	12
16	2	32	Slash Pine	12	32	384
18	1	18	Laurel Oak	13	2	26
23	1	23	Slash Pine	13	29	377
34	1	34	Slash Pine	14	30	420
35	1	35	Sand Pine	14	1	14
			Turkey Oak	14	1	14
			Slash Pine	15	31	465
			Laurel Oak	16	1	16
			Slash Pine	16	28	448
			Slash Pine	17	13	221
			Slash Pine	18	10	180
			Slash Pine	19	11	209
			Slash Pine	20	1	20
			Slash Pine	21	2	42
			Slash Pine	23	1	23
Total Oak:		352			Total Other:	3,260
Total Trees Inches						3,612

TOTAL TREE INCHES TO BE SAVED

Live Oaks			Other Trees		
Size (Inches)	No.	Total Inches	Size (Inches)	No.	Total Inches
10	5	50	10 Slash Pine	10	100
11	5	55	11 Slash Pine	5	55
12	2	24	12 Slash Pine	10	120
15	1	15	13 Laurel Oak	1	13
18	1	18	13 Slash Pine	16	208
34	1	34	14 Slash Pine	15	210
			14 Sand Pine	1	14
			15 Slash Pine	13	195
			16 Slash Pine	5	80
			17 Slash Pine	1	17
			18 Slash Pine	3	54
			19 Slash Pine	8	152
			20 Slash Pine	1	20
			21 Slash Pine	1	21
			23 Slash Pine	1	23
Total Oak:		196		Total Other:	1282
			Total Inches Saved		1478

TREES TO BE REMOVED

Live Oaks			Other Trees		
Size (Inches)	No.	Total Inches	Size (Inches)	No.	Total Inches
10	2	20	10 Laurel Oak	1	10
11	2	22	10 Slash Pine	7	70
12	2	24	11 Slash Pine	14	154
16	2	32	12 Laurel Oak	1	12
23	1	23	12 Slash Pine	21	252
35	1	35	13 Laurel Oak	1	13
			13 Slash Pine	14	182
			14 Slash Pine	15	210
			14 Turkey Oak	1	14
			15 Slash Pine	18	270
			16 Slash Pine	24	384
			17 Slash Pine	12	204
			18 Slash Pine	7	126
			19 Slash Pine	3	57
			21 Slash Pine	1	21
Total Oak:		156	Total Other		1979
				Total Other at 1/3:	660
Total Trees Inches Replaced					816
Others to be replaced inch for 1/3 inch.					

ELEVATIONS BASED ON:
NORTH AMERICAN VERTICAL DATUM 1988
CONVERSION:
NAVD 88 TO NGVD 29 = +0.85

HEIDT DESIGN
Civil Engineering • Planning & GIS
Transportation Engineering
Ecological Services • Landscape Architecture
Engineering Business Certificate of Authorization No. 28782
Landscape Architecture Certificate of Authorization No. LC26000405
5806-B Breckenridge Pkwy.
Tampa, Florida 33610
Office: 813-253-5311
Fax: 813-464-7629
www.HeidtDesign.com

RANGELAND BOULEVARD
WEST EXTENSION PHASE 2

TREE REMOVAL COVER

PREPARED FOR: WS-TSR, LLC

1	12/30/2015	INITIAL REVIEW SUBMITTAL
	DATE	DESCRIPTION

	DATE	DESCRIPTION

R:\STARKEY RANCH\RANGELAND BLVD WEST EXT PHASE 2\ENGINEERING\L-200.DWG-L-200:2015\12\30 9:51 AM MARK JONES

PROJECT NO:	TSR SR 1072
FILE:	L-200
DESIGN BY:	STEELE
DRAWN BY:	STEELE

FLORIDA REGISTERED
LANDSCAPE ARCHITECT

KEVEN JOHN STEELE
DATE:
REGISTRATION NO. LA6667179

L-200

© COPYRIGHT 2015, HEIDT DESIGN, LLC. ALL RIGHTS RESERVED. NO DOCUMENTATION (INCLUDING BUT NOT LIMITED TO DRAWINGS OR EXHIBITS) MAY BE COPIED, REPRODUCED, OR DISTRIBUTED UNLESS SPECIFIC WRITTEN PERMISSION HAS BEEN OBTAINED FROM HEIDT DESIGN, LLC. IN ADVANCE. CONSENT IS HEREBY GRANTED SPECIFICALLY TO GOVERNMENTAL AGENCIES TO REPRODUCE THIS DOCUMENTATION IN COMPLIANCE WITH F.S. CHAPTER 119.

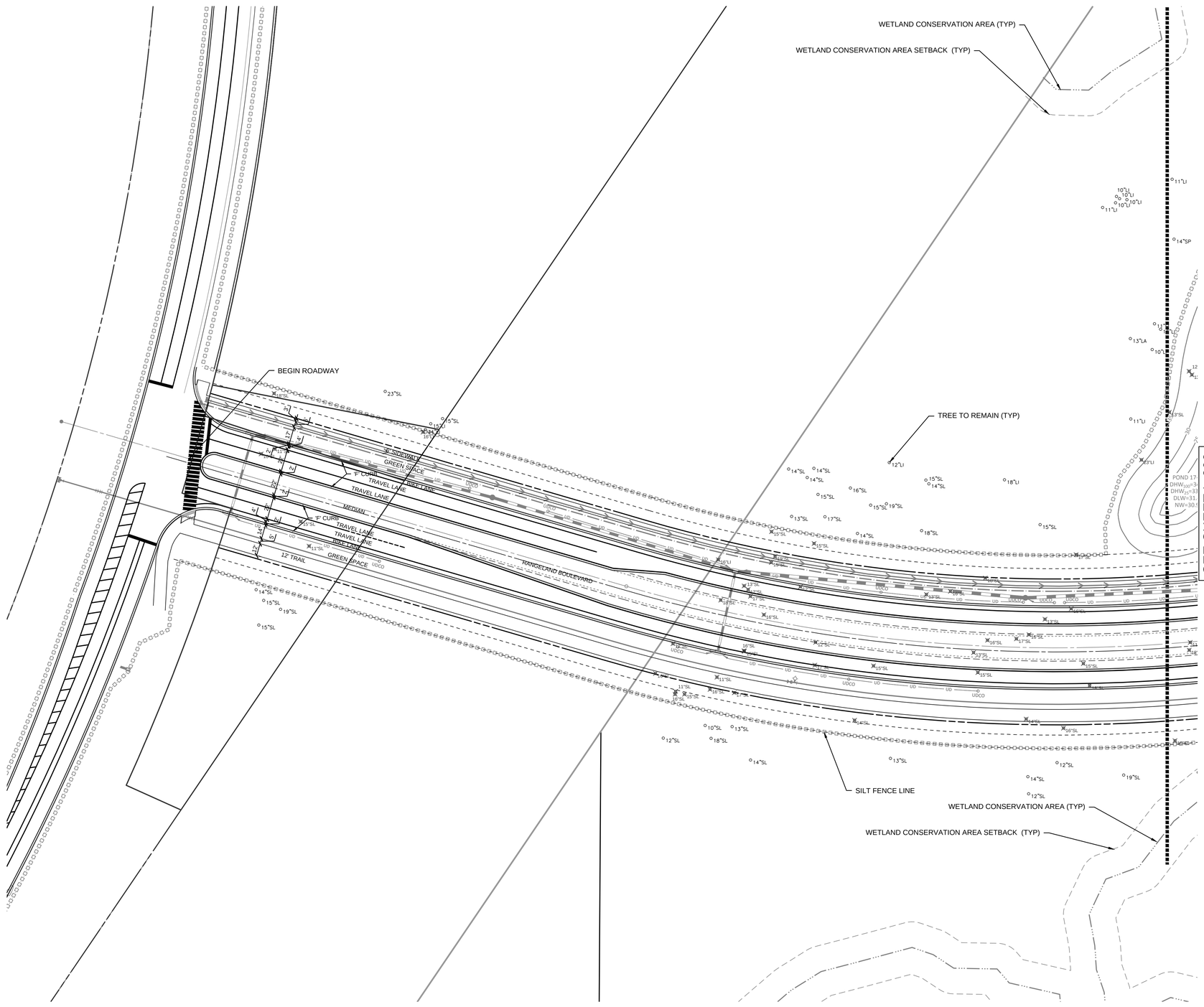

LEGEND

12"LI	TREE TO REMAIN
14"LI	TREE TO BE REMOVED

EXISTING TREE CODES

AP	AUSTRALIAN PINE
C	CYPRESS
CL	CHERRY LAUREL
CM	CAMPHOR
CO	COCONUT PALM
CP	CABBAGE PALM/SABAL PALM
EL	ELM
F	FIG (STRANGLER FIG)
FW	FIDDLEWOOD
H	HICKORY
LA	LAUREL (DIAMOND OAK)
LB	LOBLOLLY BAY
LI	LIVE OAK
M	MAGNOLIA
MB	MARLBERRY
MG	SOUTHERN MAGNOLIA
MH	MAHOGANY
MY	MYRTLE OAK
NP	NORFOLK PINE
P	LONELEAF PINE
PC	PECAN
PE	PERSIMMON
PM	ROYAL PALM
PT	PAPER TREE
QP	QUEEN PALM
RB	RED BAY
RM	RED MAPLE
SB	SWEET BAY MAGNOLIA
SC	SYCAMORE
SG	SWEET GUM
SL	SLASH (YELLOW PINE)
SP	SAND PINE (SCRUB PINE)
T	TALLOW WOOD
TO	TURKEY OAK
WO	WATER OAK
WP	WASHINGTON PALM
WX	WAX MYRTLE

N

0 50 100

GRAPHIC SCALE: 1" = 50'

ELEVATIONS BASED ON:
NORTH AMERICAN VERTICAL DATUM 1988
CONVERSION:
NAVD 88 TO NGVD 29 = +0.85

HEIDT DESIGN
Civil Engineering • Planning & GIS
Transportation Engineering
Ecological Services • Landscape Architecture
Engineering Business Certificate of Authorization No. 28782
Landscape Architecture Certificate of Authorization No. LC26000415
5806-B Breckenridge Pkwy.
Tampa, Florida 33610
Office: 813-253-5311
Fax: 813-464-7629
www.HeidtDesign.com

RANGELAND BOULEVARD WEST EXTENSION PHASE 2

TREE REMOVAL PLAN

PREPARED FOR: WS-TSR, LLC

DATE	DESCRIPTION

1	12/30/2015	INITIAL REVIEW SUBMITTAL
	DATE	DESCRIPTION

PROJECT NO:	TSR SR 1072
FILE:	L-201
DESIGN BY:	STEELE
DRAWN BY:	STEELE

FLORIDA REGISTERED LANDSCAPE ARCHITECT

KEVEN JOHN STEELE
DATE:
REGISTRATION NO. LA6667179

L-201

R:\STARKEY RANCH\RANGELAND BLVD WEST EXT PHASE 2\ENGINEERING\L-201.DWG-L-201 2015/12/30 9:52 AM MARK JONES

© COPYRIGHT 2015 - HEIDT DESIGN, LLC. ALL RIGHTS RESERVED. NO DOCUMENTATION INCLUDING BUT NOT LIMITED TO DRAWINGS OR EXHIBITS MAY BE COPIED, REPRODUCED, OR DISTRIBUTED UNLESS SPECIFIC WRITTEN PERMISSION HAS BEEN OBTAINED FROM HEIDT DESIGN, LLC. IN ADVANCE. CONSENT IS HEREBY GRANTED SPECIFICALLY TO GOVERNMENTAL AGENCIES TO REPRODUCE THIS DOCUMENTATION IN COMPLIANCE WITH F.S. CHAPTER 119.

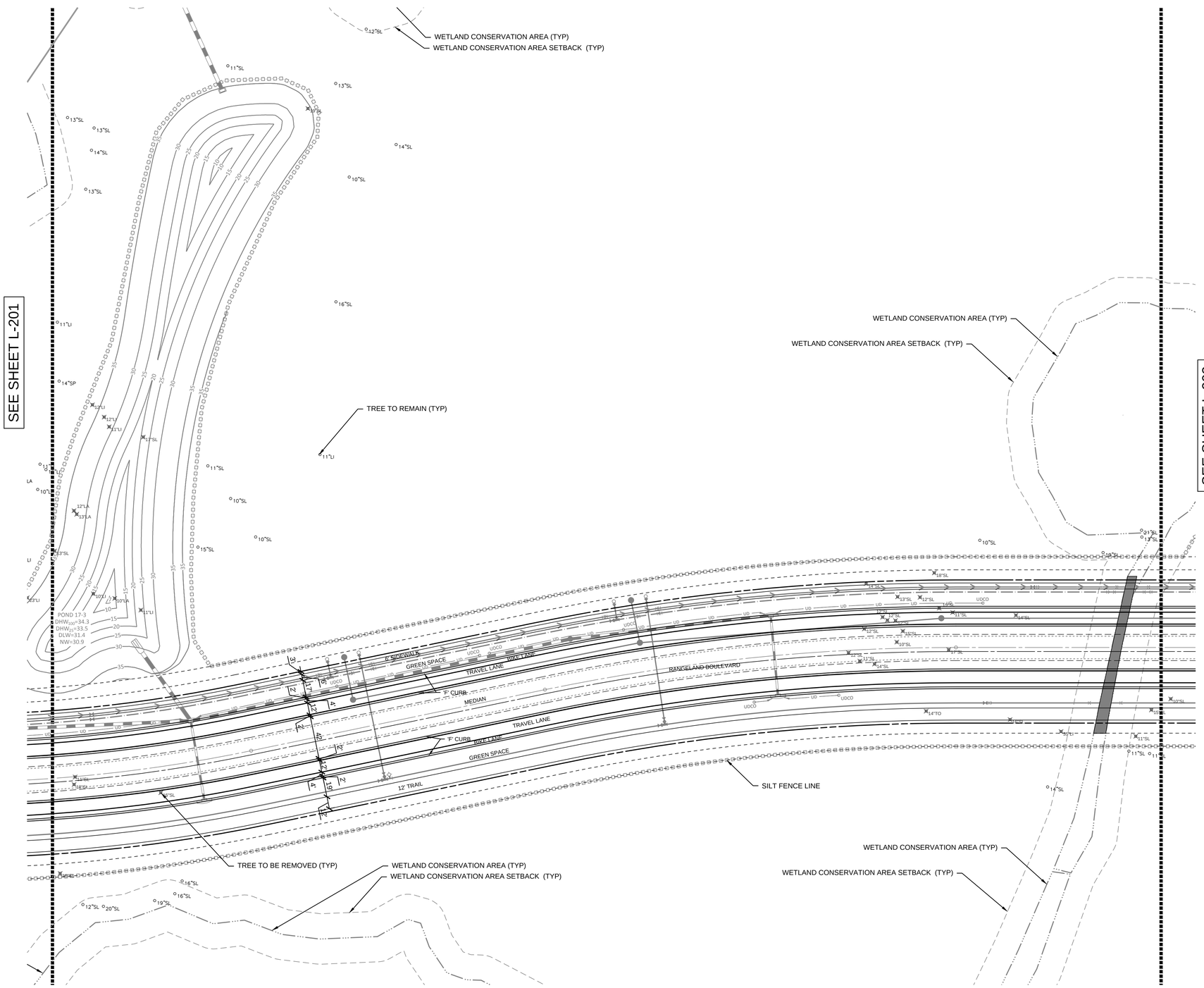

LEGEND

12"LI	TREE TO REMAIN
14"LI	TREE TO BE REMOVED

EXISTING TREE CODES

AP	AUSTRALIAN PINE
C	CYPRESS
CL	CHERRY LAUREL
CM	CAMPHOR
CO	COCONUT PALM
CP	CABBAGE PALM/SABAL PALM
EL	ELM
F	FIG (STRANGLER FIG)
FW	FIDDLEWOOD
H	HICKORY
LA	LAUREL (DIAMOND OAK)
LB	LOBLOLLY BAY
LI	LIVE OAK
M	MAGNOLIA
MB	MARLBERRY
MG	SOUTHERN MAGNOLIA
MH	MAHOGANY
MY	MYRTLE OAK
NP	NORFOLK PINE
P	LONELEAF PINE
PC	PECAN
PE	PERSIMMON
PM	ROYAL PALM
PT	PAPER TREE
QP	QUEEN PALM
RB	RED BAY
RM	RED MAPLE
SB	SWEET BAY MAGNOLIA
SC	SYCAMORE
SG	SWEET GUM
SL	SLASH (YELLOW PINE)
SP	SAND PINE (SCRUB PINE)
T	TALLOW WOOD
TO	TURKEY OAK
WO	WATER OAK
WP	WASHINGTON PALM
WX	WAX MYRTLE

N

0 50 100

GRAPHIC SCALE: 1" = 50'

ELEVATIONS BASED ON:
NORTH AMERICAN VERTICAL DATUM 1988
CONVERSION:
NAVD 88 TO NGVD 29 = +0.85

HEIDT DESIGN
Civil Engineering • Planning & GIS
Transportation Engineering
Ecological Services • Landscape Architecture
Engineering Business Certificate of Authorization No. 28782
Landscape Architecture Certificate of Authorization No. LC26000415
5806-B Breckenridge Pkwy.
Tampa, Florida 33610
Office: 813-253-5311
Fax: 813-464-7629
www.HeidtDesign.com

R:\STARKEY RANCH\RANGELAND BLVD WEST EXT PHASE 2\ENGINEERING\L 201.DWG-L 202 2015\12\30 9:52 AM MARK JONES

RANGELAND BOULEVARD WEST EXTENSION PHASE 2

TREE REMOVAL PLAN

PREPARED FOR: WS-TSR, LLC

1	12/30/2015	INITIAL REVIEW SUBMITTAL
	DATE	DESCRIPTION

PROJECT NO:	TSR SR 1072
FILE:	L-201
DESIGN BY:	STEELE
DRAWN BY:	STEELE

FLORIDA REGISTERED LANDSCAPE ARCHITECT

KEVEN JOHN STEELE
DATE:
REGISTRATION NO. LA6667179

L-202

© COPYRIGHT 2015, HEIDT DESIGN, LLC. ALL RIGHTS RESERVED. NO DOCUMENTATION INCLUDING BUT NOT LIMITED TO DRAWINGS OR EXHIBITS MAY BE COPIED, REPRODUCED, OR DISTRIBUTED UNLESS SPECIFIC WRITTEN PERMISSION HAS BEEN OBTAINED FROM HEIDT DESIGN, LLC. IN ADVANCE. CONSENT IS HEREBY GRANTED SPECIFICALLY TO GOVERNMENTAL AGENCIES TO REPRODUCE THIS DOCUMENTATION IN COMPLIANCE WITH F.S. CHAPTER 119.

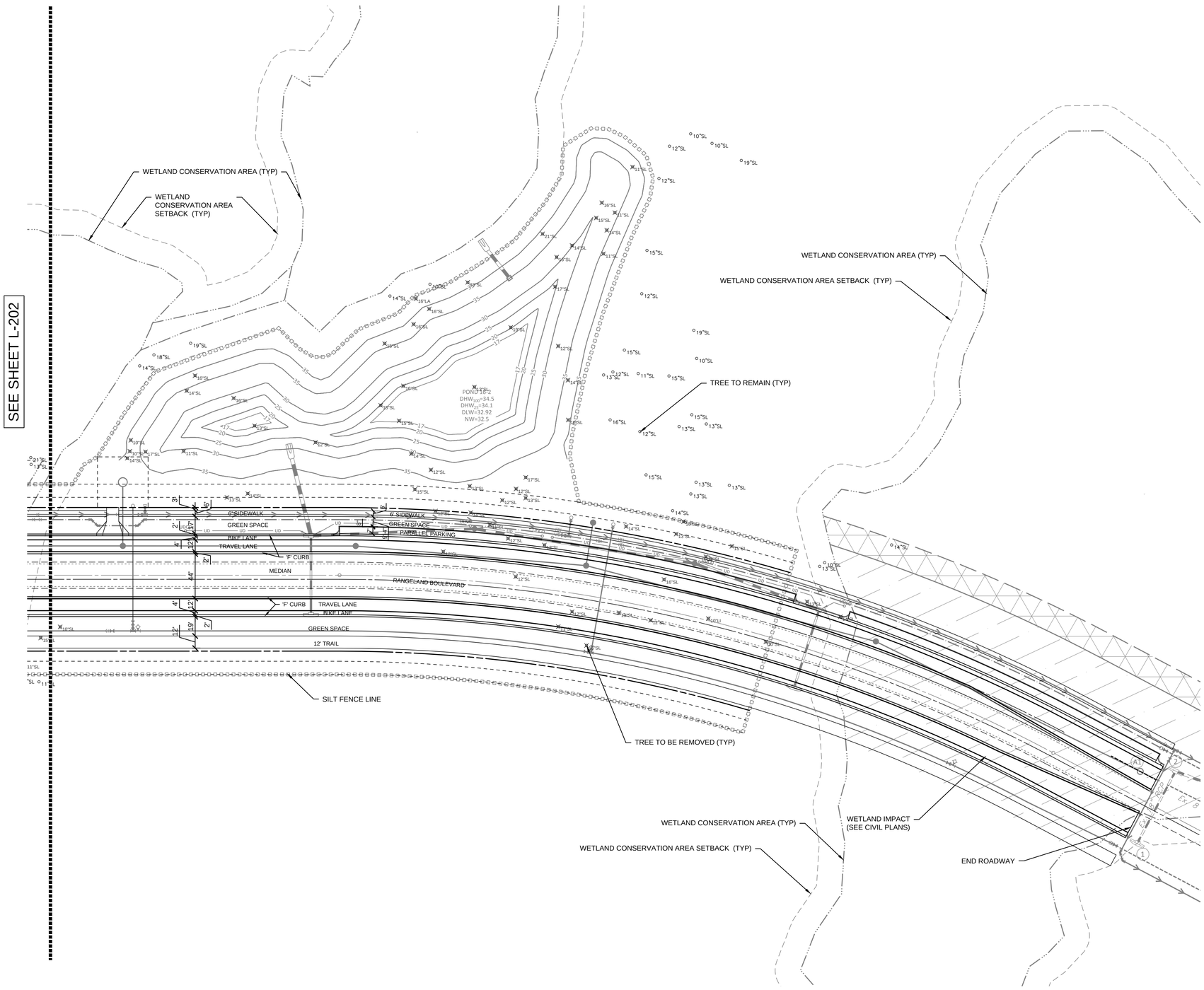

LEGEND

12"L/	TREE TO REMAIN
14"LI	TREE TO BE REMOVED

EXISTING TREE CODES

AP	AUSTRALIAN PINE
C	CYPRESS
CL	CHERRY LAUREL
CM	CAMPHOR
CO	COCONUT PALM
CP	CABBAGE PALM/SABAL PALM
EL	ELM
F	FIG (STRANGLER FIG)
FW	FIDDLEWOOD
H	HICKORY
LA	LAUREL (DIAMOND OAK)
LB	LOBLOLLY BAY
LI	LIVE OAK
M	MAGNOLIA
MB	MARLBERRY
MG	SOUTHERN MAGNOLIA
MH	MAHOGANY
MY	MYRTLE OAK
NP	NORFOLK PINE
P	LONELEAF PINE
PC	PECAN
PE	PERSIMMON
PM	ROYAL PALM
PT	PAPER TREE
QP	QUEEN PALM
RB	RED BAY
RM	RED MAPLE
SB	SWEET BAY MAGNOLIA
SC	SYCAMORE
SG	SWEET GUM
SL	SLASH (YELLOW PINE)
SP	SAND PINE (SCRUB PINE)
T	TALLOW WOOD
TO	TURKEY OAK
WO	WATER OAK
WP	WASHINGTON PALM
WX	WAX MYRTLE

N

0 50 100

GRAPHIC SCALE: 1" = 50'

ELEVATIONS BASED ON:
NORTH AMERICAN VERTICAL DATUM 1988
CONVERSION:
NAVD 88 TO NGVD 29 = +0.85

HEIDT DESIGN
Civil Engineering • Planning & GIS
Transportation Engineering
Ecological Services • Landscape Architecture
Engineering Business Certificate of Authorization No. 28782
Landscape Architecture Certificate of Authorization No. LC26000415
5806-B Breckenridge Pkwy.
Tampa, Florida 33610
Office: 813-253-5311
Fax: 813-464-7629
www.HeidtDesign.com

R:\STARKEY RANCH\RANGELAND BLVD WEST EXT PHASE 2\ENGINEERING\L-201.DWG-1-2013\2015\12\30\9:52 AM MARK JONES

RANGELAND BOULEVARD
WEST EXTENSION PHASE 2

TREE REMOVAL PLAN

PREPARED FOR: WS-TSR, LLC

1	12/30/2015	INITIAL REVIEW SUBMITTAL
	DATE	DESCRIPTION

DATE	DESCRIPTION

PROJECT NO:	TSR SR 1072
FILE:	L-201
DESIGN BY:	STEELE
DRAWN BY:	STEELE

FLORIDA REGISTERED LANDSCAPE ARCHITECT

KEVEN JOHN STEELE
DATE:
REGISTRATION NO.LA6667179

L-203

© COPYRIGHT 2015, HEIDT DESIGN, LLC. ALL RIGHTS RESERVED. NO DOCUMENTATION, INCLUDING BUT NOT LIMITED TO DRAWINGS OR EXHIBITS, MAY BE COPIED, REPRODUCED, OR DISTRIBUTED UNLESS SPECIFIC WRITTEN PERMISSION HAS BEEN OBTAINED FROM HEIDT DESIGN, LLC. IN ADVANCE. CONSENT IS HEREBY GRANTED SPECIFICALLY TO GOVERNMENTAL AGENCIES TO REPRODUCE THIS DOCUMENTATION IN COMPLIANCE WITH F.S. CHAPTER 119.

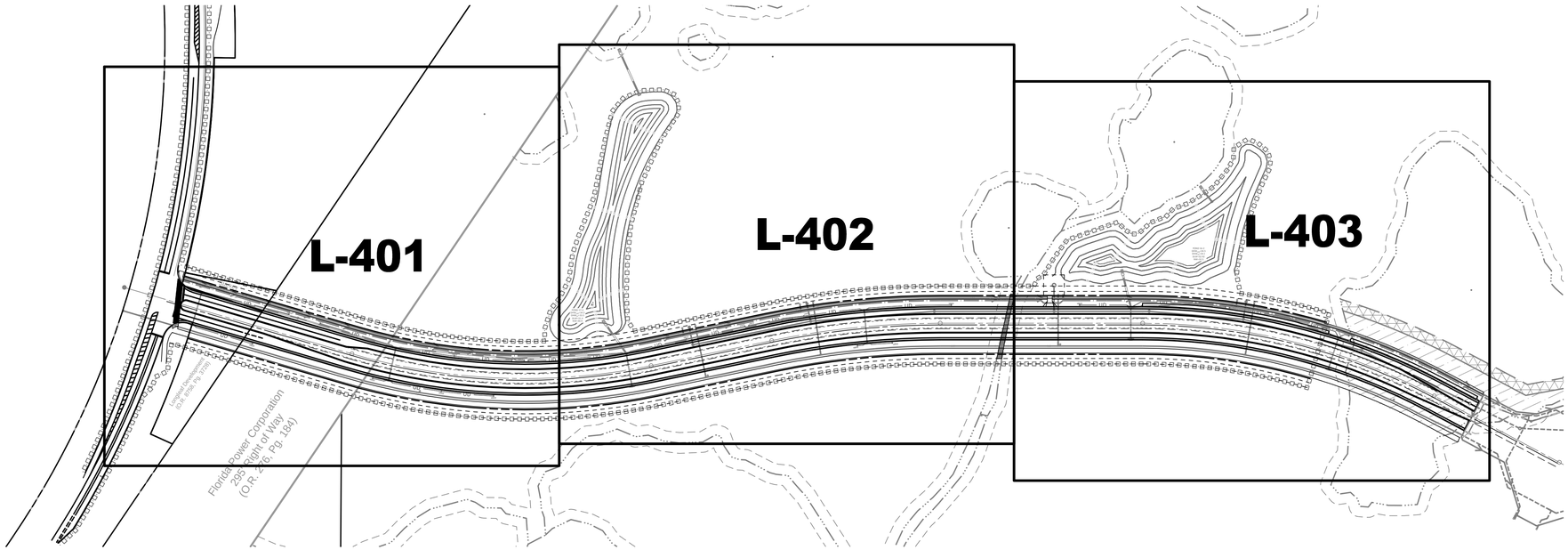

DEVELOPER REQUIRED TREES & SHRUBS

SITE	BUFFER TYPE	TOTAL LINEAR FEET OF BUFFER	TOTAL SHRUBS REQUIRED	TOTAL TREES REQUIRED	CALIPER OF TREES REQUIRED (INCHES)	TOTAL INCHES OF TREES REQUIRED
POND BUFFER (1 TREE/50 LF)	WATER MANAGEMENT AREA	2,861	0	57	2	114
REPLACEMENT INCHES						816
TOTAL REQUIRED LANDSCAPE			**0**	**57**		**930**

Trees to be Planted						
	Live Oaks				Other Trees	
Size (Inches)	No.	Total Inches			No.	Total Inches
3	66	198			244	732

STARKEY RANCH POPOSED PLANT LIST

Symbol	Quantity	Code	Botanical	Common	Container	Cal	Size	Remarks	Native	Drought Tolerance
	26	AR3	Acer rubrum	Red Maple	45 G	3"Cal	14-16`HT x 6-8`SPR	Single, straight central leader. Even branching.	Yes	No
	27	MG3	Magnolia grandiflora	Southern Magnolia	FG	3"Cal	14-16`HT x 6-8`SPR	Full canopy with even branching.	Yes	Yes
	33	MV3	Magnolia virginiana	Sweet Bay Magnolia	45 G	3"Cal	14-16`HT x 6-8`SPR	Full canopy with even branching.	Yes	No
	67	PP3	Pinus palustris	Longleaf Pine	FG	3"Cal	14-16`HT x 6-8`SPR	Single, straight central leader. Even branching.	Yes	Yes
	29	QS3	Quercus shumardii	Shumard Red Oak	100 G	3"Cal	14-16`HT x 6-8`SPR	5` CT. Single straight central leader. Full head. Even branching.	Yes	Yes
	67	QV3	Quercus virginiana	Southern Live Oak	FG	3"Cal	14-16`HT x 6-8`SPR	5` CT Min., Main Central Leader	Yes	Yes
	42	TD3	Taxodium distichum	Bald Cypress	45 G	3"Cal	14-16`HT x 6-8`SPR	Full canopy with even branching.	Yes	Yes
	27	UA3	Ulmus alata	Winged Elm	FG	3"Cal	14-16`HT x 6-8`SPR	5` CT., Main Central Leader	Yes	Yes

ELEVATIONS BASED ON:
NORTH AMERICAN VERTICAL DATUM 1988
CONVERSION:
NAVD 88 TO NGVD 29 = +0.85

HEIDT DESIGN
Civil Engineering • Planning & GIS
Transportation Engineering
Ecological Services • Landscape Architecture
Engineering Business Certificate of Authorization No. 28782
Landscape Architecture Certificate of Authorization No. LC26000435
5806-B Breckenridge Pkwy.
Tampa, Florida 33610
Office: 813-253-5311
Fax: 813-464-7629
www.HeidtDesign.com

R:\STARKEY RANCH\RANGELAND BLVD WEST EXT PHASE 2\ENGINEERING\L-400.DWG L-400 2015\12\30 9:53 AM MARK JONES

RANGELAND BOULEVARD
WEST EXTENSION PHASE 2

LANDSCAPE COVER

PREPARED FOR:
WS-TSR, LLC

DATE	DESCRIPTION

DATE	DESCRIPTION
12/30/2015	INITIAL REVIEW SUBMITTAL

PROJECT NO:	TSR SR 1072
FILE:	L-400
DESIGN BY:	STEELE
DRAWN BY:	STEELE

FLORIDA REGISTERED
LANDSCAPE ARCHITECT

KEVEN JOHN STEELE
DATE:
REGISTRATION NO.LA6667179

L-400

© COPYRIGHT 2015 HEIDT DESIGN, LLC. ALL RIGHTS RESERVED. NO DOCUMENTATION INCLUDING BUT NOT LIMITED TO DRAWINGS OR EXHIBITS MAY BE COPIED, REPRODUCED, OR DISTRIBUTED UNLESS SPECIFIC WRITTEN PERMISSION HAS BEEN OBTAINED FROM HEIDT DESIGN, LLC. IN ADVANCE. CONSENT IS HEREBY GRANTED SPECIFICALLY TO GOVERNMENTAL AGENCIES TO REPRODUCE THIS DOCUMENTATION IN COMPLIANCE WITH F.S. CHAPTER 119.

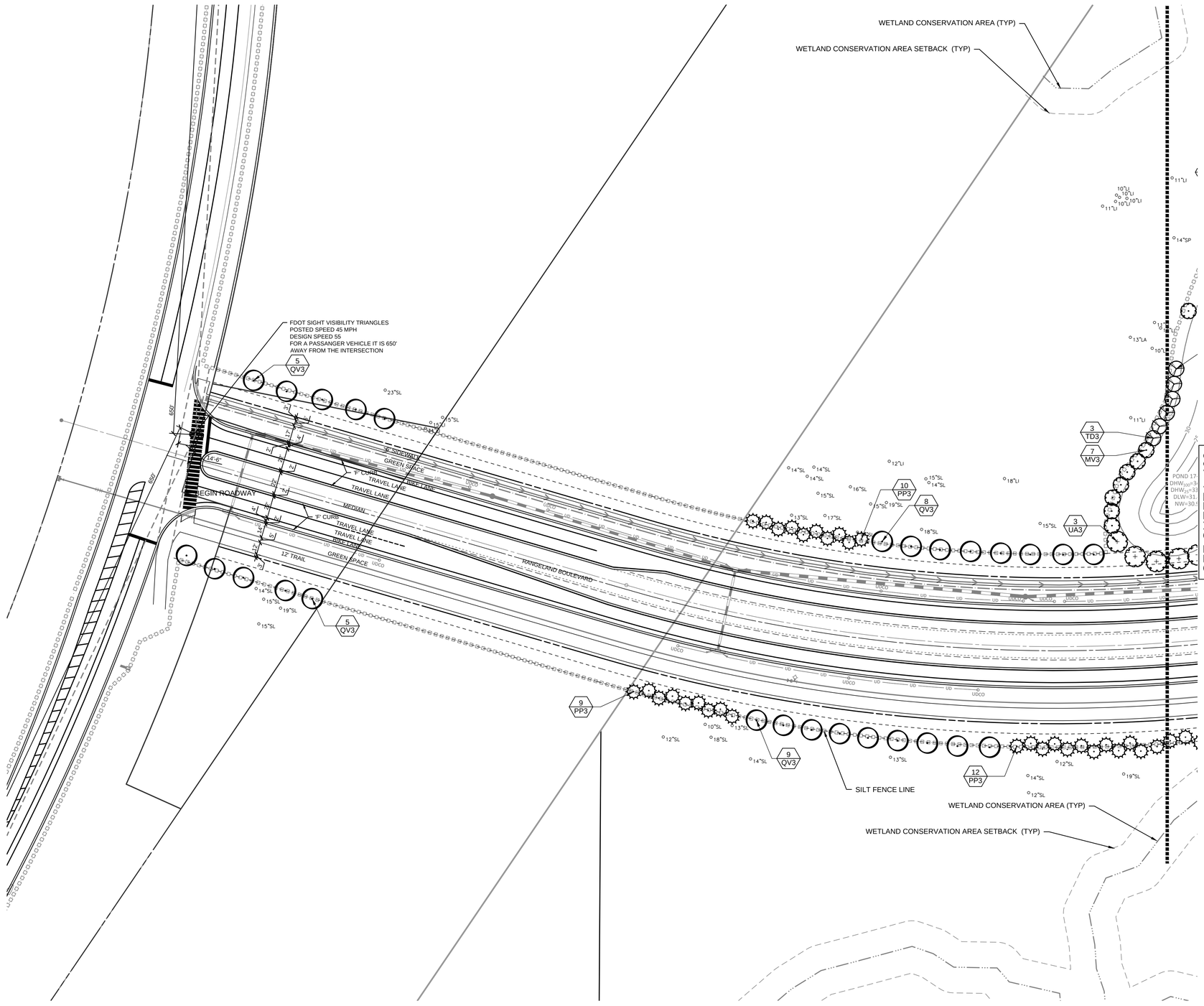

ELEVATIONS BASED ON:
NORTH AMERICAN VERTICAL DATUM 1988
CONVERSION:
NAVD 88 TO NGVD 29 = +0.85

PLANT SCHEDULE

TREES	COMMON NAME	BOTANICAL NAME
AR3	Red Maple	Acer rubrum
MG3	Southern Magnolia	Magnolia grandiflora
MV3	Sweet Bay Magnolia	Magnolia virginiana
PP3	Longleaf Pine	Pinus palustris
QS3	Shumard Red Oak	Quercus shumardii
QV3	Southern Live Oak	Quercus virginiana
TD3	Bald Cypress	Taxodium distichum
UA3	Winged Elm	Ulmus alata

HEIDT DESIGN
Civil Engineering • Planning & GIS
Transportation Engineering
Ecological Services • Landscape Architecture
Engineering Business Certificate of Authorization No. 28782
Landscape Architecture Certificate of Authorization No. LC26000435
5806-B Breckenridge Pkwy.
Tampa, Florida 33610
Office: 813-253-5311
Fax: 813-464-7629
www.HeidtDesign.com

RANGELAND BOULEVARD WEST EXTENSION PHASE 2

PERMIT LANDSCAPE PLAN

PREPARED FOR: WS-TSR, LLC

DATE	DESCRIPTION

DATE	DESCRIPTION
12/30/2015	INITIAL REVIEW SUBMITTAL
1	

PROJECT NO:	TSR SR 1072
FILE:	L-401
DESIGN BY:	STEELE
DRAWN BY:	STEELE

FLORIDA REGISTERED LANDSCAPE ARCHITECT

KEVEN JOHN STEELE
DATE:
REGISTRATION NO. LA6667179

L-401

R:\STARKEY RANCH\RANGELAND BLVD WEST EXT PHASE 2\ENGINEERING\L-401.DWG L-401 2015\12\30 9:54 AM MARK JONES

© COPYRIGHT 2015 HEIDT DESIGN, LLC. ALL RIGHTS RESERVED. NO DOCUMENTATION INCLUDING BUT NOT LIMITED TO DRAWINGS OR FLYWRITS MAY BE COPIED, REPRODUCED, OR DISTRIBUTED UNLESS SPECIFIC WRITTEN PERMISSION HAS BEEN OBTAINED FROM HEIDT DESIGN, LLC. IN ADVANCE. CONSENT IS HEREBY GRANTED SPECIFICALLY TO GOVERNMENTAL AGENCIES TO REPRODUCE THIS DOCUMENTATION IN COMPLIANCE WITH F.S. CHAPTER 119.

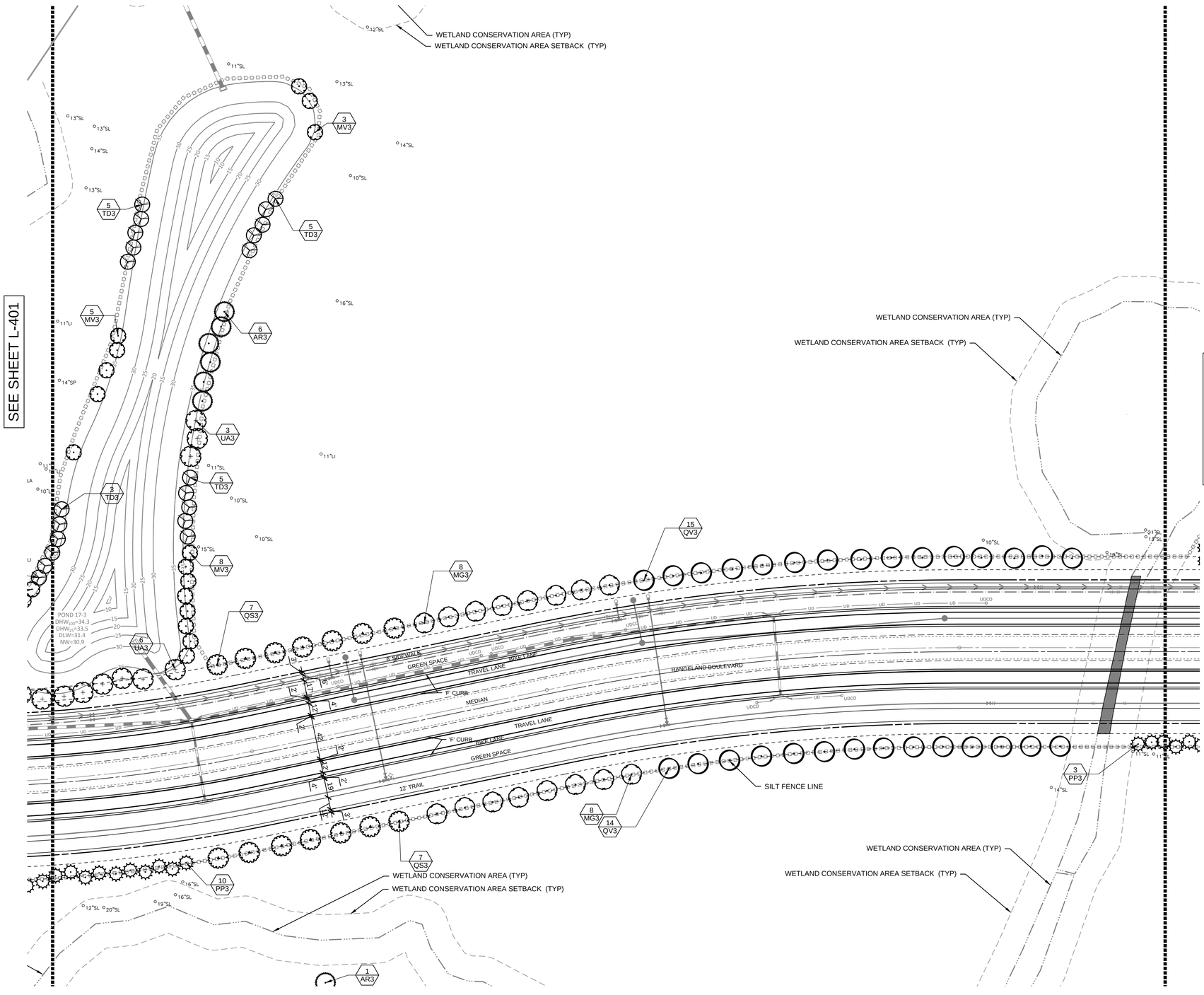

PLANT SCHEDULE

TREES	COMMON NAME	BOTANICAL NAME
AR3	Red Maple	Acer rubrum
MG3	Southern Magnolia	Magnolia grandiflora
MV3	Sweet Bay Magnolia	Magnolia virginiana
PP3	Longleaf Pine	Pinus palustris
QS3	Shumard Red Oak	Quercus shumardii
QV3	Southern Live Oak	Quercus virginiana
TD3	Bald Cypress	Taxodium distichum
UA3	Winged Elm	Ulmus alata

N

0 50 100

GRAPHIC SCALE: 1" = 50'

ELEVATIONS BASED ON:
NORTH AMERICAN VERTICAL DATUM 1988
CONVERSION:
NAVD 88 TO NGVD 29 = +0.85

HEIDT DESIGN
Civil Engineering • Planning & GIS
Transportation Engineering
Ecological Services • Landscape Architecture
Engineering Business Certificate of Authorization No. 28782
Landscape Architecture Certificate of Authorization No. LC26000415
5806-B Breckenridge Pkwy.
Tampa, Florida 33610
Office: 813-253-5311
Fax: 813-464-7629
www.HeidtDesign.com

RANGELAND BOULEVARD WEST EXTENSION PHASE 2

PERMIT LANDSCAPE PLAN

PREPARED FOR: WS-TSR, LLC

1	12/30/2015	INITIAL REVIEW SUBMITTAL
	DATE	DESCRIPTION

PROJECT NO:	TSR SR 1072
FILE:	L-401
DESIGN BY:	STEELE
DRAWN BY:	STEELE

FLORIDA REGISTERED LANDSCAPE ARCHITECT

KEVEN JOHN STEELE
DATE:
REGISTRATION NO.LA6667179

L-402

R:\STARKEY RANCH\RANGELAND BLVD WEST EXT PHASE 2\ENGINEERING\L-401.DWG-L-402 2015\12\30\ 9:54 AM MARK JONES

© COPYRIGHT 2015, HEIDT DESIGN, LLC. ALL RIGHTS RESERVED. NO DOCUMENTATION, INCLUDING BUT NOT LIMITED TO DRAWINGS OR EXHIBITS MAY BE COPIED, REPRODUCED, OR DISTRIBUTED UNLESS SPECIFIC WRITTEN PERMISSION HAS BEEN OBTAINED FROM HEIDT DESIGN, LLC. IN ADVANCE. CONSENT IS HEREBY GRANTED SPECIFICALLY TO GOVERNMENTAL AGENCIES TO REPRODUCE THIS DOCUMENTATION IN COMPLIANCE WITH F.S. CHAPTER 119.

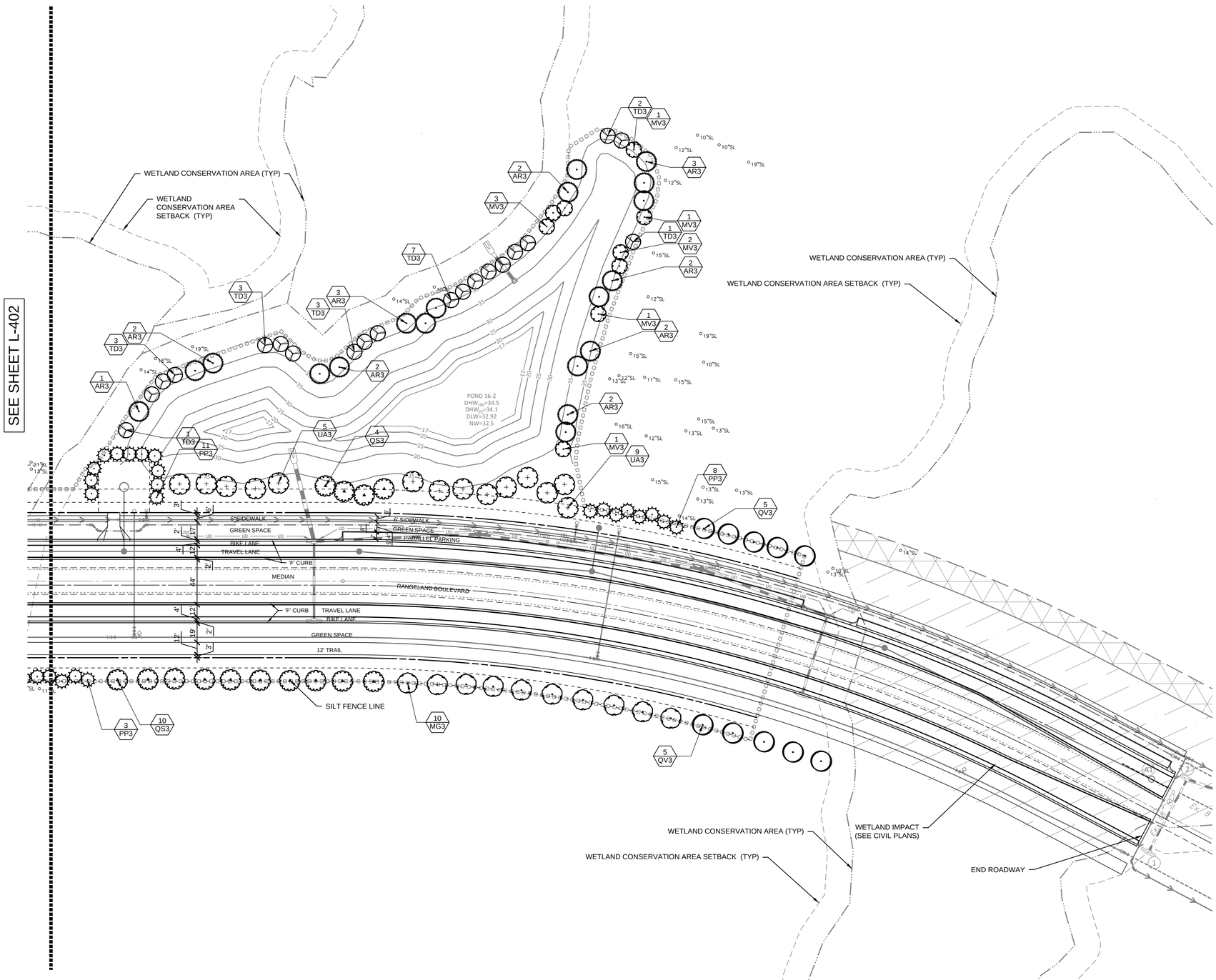

ELEVATIONS BASED ON:
NORTH AMERICAN VERTICAL DATUM 1988
CONVERSION:
NAVD 88 TO NGVD 29 = +0.85

PLANT SCHEDULE

TREES	COMMON NAME	BOTANICAL NAME
AR3	Red Maple	Acer rubrum
MG3	Southern Magnolia	Magnolia grandiflora
MV3	Sweet Bay Magnolia	Magnolia virginiana
PP3	Longleaf Pine	Pinus palustris
QS3	Shumard Red Oak	Quercus shumardii
QV3	Southern Live Oak	Quercus virginiana
TD3	Bald Cypress	Taxodium distichum
UA3	Winged Elm	Ulmus alata

HEIDT DESIGN
Civil Engineering • Planning & GIS
Transportation Engineering
Ecological Services • Landscape Architecture
Engineering Business Certificate of Authorization No. 28782
Landscape Architecture Certificate of Authorization No. LC26000405
5806-B Breckenridge Pkwy.
Tampa, Florida 33610
Office: 813-253-5311
Fax: 813-464-7629
www.HeidtDesign.com

R:\STARKEY RANCH\RANGELAND BLVD WEST EXT PHASE 2\ENGINEERING\L-401.DWG-L-403 2015\12\30 9:54 AM MARK JONES

RANGELAND BOULEVARD WEST EXTENSION PHASE 2
PERMIT LANDSCAPE PLAN

PREPARED FOR: WS-TSR, LLC

DATE	DESCRIPTION

DATE	DESCRIPTION
12/30/2015	INITIAL REVIEW SUBMITTAL
1	

PROJECT NO:	TSR SR 1072
FILE:	L-401
DESIGN BY:	STEELE
DRAWN BY:	STEELE

FLORIDA REGISTERED LANDSCAPE ARCHITECT

KEVEN JOHN STEELE
DATE:
REGISTRATION NO. LA6667179

L-403

© COPYRIGHT 2015, HEIDT DESIGN, LLC. ALL RIGHTS RESERVED. NO DOCUMENTATION, INCLUDING BUT NOT LIMITED TO DRAWINGS OR EXHIBITS MAY BE COPIED, REPRODUCED, OR DISTRIBUTED UNLESS SPECIFIC WRITTEN PERMISSION HAS BEEN OBTAINED FROM HEIDT DESIGN, LLC. IN ADVANCE. CONSENT IS HEREBY GRANTED SPECIFICALLY TO GOVERNMENTAL AGENCIES TO REPRODUCE THIS DOCUMENTATION IN COMPLIANCE WITH F.S. CHAPTER 119.

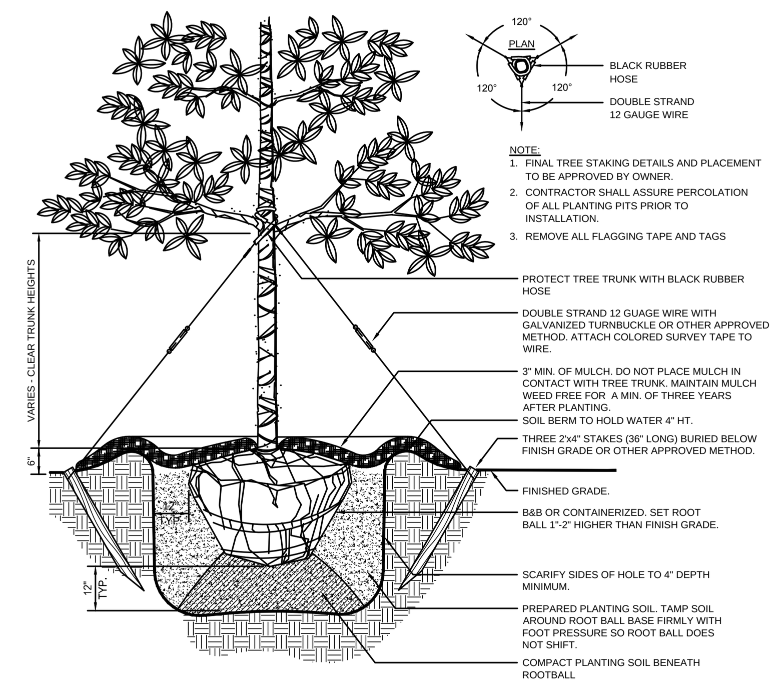

A TREE STAKING DETAIL

SCALE: N.T.S. DETAIL CODE

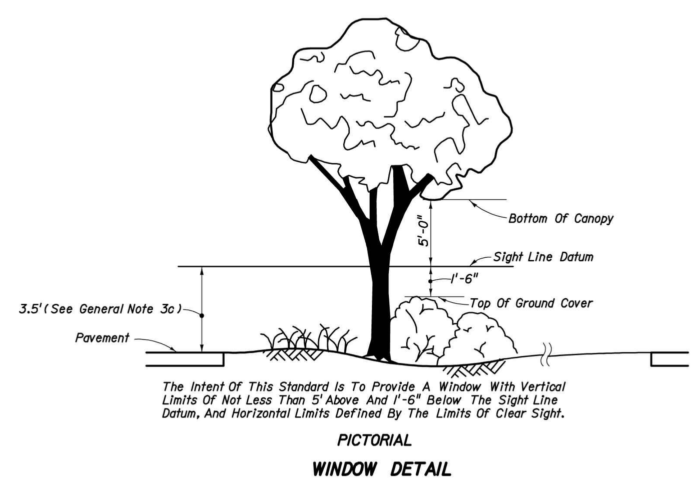

B SIGHT WINDOW DETAIL

SCALE: N.T.S.

RIGHT-OF-WAY LANDSCAPE NOTES:

1. 4' CLEAR ZONE IN MEDIANS SHALL BE PROVIDED, MEASURED FROM EDGE OF TRAVEL LANE, AS SHOWN ON PLANS.
2. 4' CLEAR ZONE ON OUTSIDE EDGE OF ROADWAY SHALL BE PROVIDED, MEASURED FROM EDGE OF TRAVEL LANE, AS SHOWN ON PLANS.
3. TREES WITH CANOPIES THAT EXTEND INTO CLEAR ZONES SHALL BE MAINTAINED AT 5' MIN. CLEAR TRUNK (CT) HEIGHT ABOVE THE SIGHT LINE DATUM.
4. ADDITIONAL PLANTINGS IN RIGHT-OF-WAY IN EXCESS TO CODE REQUIREMENTS MAY BE INSTALLED, PROVIDED THAT THEY ARE LOCATED OUTSIDE THE ROADSIDE CLEAR ZONE, DO NOT OBSTRUCT SIGHT TRIANGLES, AND MAINTAINED BY OWNER.

Pasco County Landscaping Standard Notes (Pasco LDC 905.2)

1. *MAINTENANCE RESPONSIBILITY.* THE COUNTY IS NOT RESPONSIBLE FOR MAINTENANCE OF ANY LANDSCAPING UNLESS APPROVED THROUGH A COUNTY MAINTENANCE AGREEMENT. (LDC 905.2-C.1.A)
2. *SUSTAINABLE PRACTICES.* LANDSCAPING SHALL BE INSTALLED SO THAT LANDSCAPING MATERIALS MEET THE CONCEPT OF RIGHT MATERIAL/RIGHT PLACE. INSTALLED TREES AND PLANTS SHALL BE GROUPED INTO ZONES ACCORDING TO WATER, SOIL, CLIMATE, AND LIGHT REQUIREMENTS. PLANT GROUPINGS BASED ON WATER REQUIREMENTS ARE DROUGHT TOLERANT, NATURAL, AND OASIS. *(LDC 905.2-C.1.C)*
3. *AVOID EASEMENTS.* TREES SHALL NOT BE PLANTED WITHIN ANY EASEMENT SO AS TO INTERFERE WITH THE USE OF THAT EASEMENT, NOR UNDER ANY PRESENT OR PLANNED OVERHEAD UTILITY, NOR IN ANY RIGHTS-OF-WAY WITHOUT COUNTY APPROVAL THROUGH THE ASSOCIATED REVIEW PROCESS. (LDC 905.2-C.3.C)
4. ALL PORTIONS OF A LOT UPON WHICH DEVELOPMENT HAS COMMENCED, BUT NOT CONTINUED FOR A PERIOD OF 30 DAYS, SHALL BE PLANTED WITH A GRASS SPECIES OR GROUND COVER TO PREVENT EROSION AND ENCOURAGE SOIL STABILIZATION. ADEQUATE COVERAGE, SO AS TO SUPPRESS FUGITIVE DUST, SHALL BE ACHIEVED WITHIN 45 DAYS. *(LDC 905.2-C.3.G)*
5. ALL REQUIRED LANDSCAPING SHALL BE MAINTAINED IN A HEALTHY CONDITION IN PERPETUITY IN ACCORDANCE WITH THIS CODE. *(LDC 905.2-E.2)*
6. ONGOING MAINTENANCE TO PREVENT THE ESTABLISHMENT OF PROHIBITED EXOTIC SPECIES IS REQUIRED. *(LDC 905.2-E.4)*

PASCO COUNTY DEVELOPMENT REVIEW - STANDARD SITE PLAN NOTES

1. ALL ON-SITE WATER AND SEWER FACILITIES SHALL BE OWNED AND MAINTAINED BY THE OWNER-DEVELOPER.
2. HANDICAP PARKING SPACES WILL BE PROPERLY SIGNED AND STRIPED IN ACCORDANCE WITH FLORIDA STATUTE 316, THE MANUAL ON UNIFORM TRAFFIC CONTROL DEVICES, OR OTHER APPLICABLE STANDARDS.
3. ALL STRUCTURES, INCLUDING BUFFER WALLS, RETAINING WALLS, SIGNAGE, ETC. REQUIRE BUILDING PERMITS.

Water Management Areas:

- RETENTION AREAS VISIBLE FROM THE ROAD, OR LOCATED WITHIN REQUIRED BUFFERING (MAX. 70% INTRUSION INTO BUFFER WIDTH), MUST BE OFFSET WITH ONE TREE EA. 50 L.F. OF POND AND MEANDERED.

Landscaping Specifications:

- SIZES REQUIRED AT INSTALLATION: 2" CAL/10' HT.; SHRUBS 24" HT., 24" O.C.
- NO MORE THAN 30% OF REQUIRED LANDSCAPED AREA MAY BE GRASSES (SECT. 10)
- NO PLANTINGS OVER 3-1/2' HT IN THE 20' CLEAR-SITE AREAS.
- PALM TREES COUNT AS 3 TO ; I.E., 3 PALMS = 1 SHADE TREE
- MAXIMUM 50% PLANT MATERIALS, OTHER THAT TREES, MAY BE NON-DROUGHT TOLERANT. NATIVE PLANT MATERIAL AS FOLLOWS: 2003 - 20% NATIVE PLANTS; 2004 - 30% NATIVE PLANT MATERIALS. FOR EVERY 5 TREES REQUIRED, THERE SHALL BE A MINIMUM ONE SPECIES PROVIDED, UP TO A MINIMUM OF EIGHT SPECIES WHEN FORTY OR MORE TREES ARE REQUIRED (SECT. 602.7.B1.D - TREE ORD.)
- NO ONE PLANT SPECIES OF SHRUBS OR GROUNDCOVER, EXCLUDING TURF GRASS, SHALL CONSTITUTE MORE THAN TWENTY-FIVE (25) PERCENT OF ANY LANDSCAPE PLAN (SECT. 6.C.11, L&IO)
- BERM HEIGHT IS MEASURED FROM THE VEHICULAR USE AREA GRADE.
- IRRIGATION DESIGNED PER REQUIREMENTS OF SECT. 15C.L@IO
- MULCH AND GRAVEL SPECIFICATIONS - SECT. 6.C.10. L@IO

LANDSCAPE NOTES AND SPECIFICATIONS

IMPLEMENTATION OF THIS PLAN AND SPECIFICATIONS SHALL CONFORM TO THE HIGHEST STANDARDS OF THE TRADE AND TO ALL PREVAILING ORDINANCES AND CODES. THE SPECIFICATIONS CONTAINED HEREIN SHALL SUPPLEMENT THE WRITTEN SPECIFICATIONS.

PRIOR TO SUBMISSION OF BID, THE LANDSCAPE CONTRACTOR SHALL VISIT THE SITE AND FULLY INFORM HIMSELF OF THE CONDITIONS UNDER WHICH THE WORK IS TO BE ACCOMPLISHED.

THE WORK INCLUDES SOIL PREPARATION, FINISH GRADING, SUPPLYING AND PLANTING OF TREES, SHRUBS, GROUNDCOVERS, VINES, AND SOD OF THE SPECIES, SIZES AND QUALITY AS SHOWN ON THE DRAWINGS AND/OR AS SPECIFIED HEREIN. FURTHER, THE WORK SHALL INCLUDE THE MAINTENANCE OF ALL LANDSCAPE AND SOD/SEED AREAS UNTIL FINAL ACCEPTANCE BY THE PROJECT ARCHITECT AND OWNER'S REPRESENTATIVE.

THE LANDSCAPE CONTRACTOR SHALL PROVIDE A LUMP SUM BID PRICE FOR A FULLY AUTOMATIC, 100% OVERLAP COVERAGE, UNDERGROUND IRRIGATION SYSTEM. THE IRRIGATION SYSTEM DESIGN, SPECIFICATIONS AND INSTALLATION SHALL CONFORM TO THE STANDARDS OF THE "IRRIGATION ASSOCIATION," 1911 N. FORT MYER DRIVE #1009, ARLINGTON, VA 22209 AND TO THE STANDARDS OF THE "FLORIDA IRRIGATION SOCIETY."

THE LANDSCAPE CONTRACTOR SHALL SECURE ANY AND ALL NECESSARY PERMITS FOR THE WORK, PRIOR TO COMMENCEMENT OF HIS OPERATIONS ON-SITE. COPIES OF THE PERMITS SHALL BE SENT TO THE ARCHITECT AND OWNER'S CONSTRUCTION REPRESENTATIVE.

THE LANDSCAPE CONTRACTOR SHALL BE PROPERLY LICENSED AND INSURED. SEE WRITTEN SPECIFICATIONS.

ALL WORK IN THE RIGHT-OF-WAY AREAS SHALL CONFORM TO THE STANDARDS AND SPECIFICATIONS OF THE LOCAL AND/OR STATE HIGHWAY JURISDICTION.

THE LANDSCAPE CONTRACTOR SHALL VERIFY ALL UTILITY LOCATIONS (EXISTING AND PROPOSED), RELATED PAVING, ELEVATIONS, WATER AND ELECTRICAL SUPPLY, ETC., PRIOR TO START OF WORK. NOTIFY THE GENERAL CONTRACTOR AND THE ARCHITECT/OWNER'S AGENT IN WRITING OF UNSATISFACTORY CONDITIONS PRIOR TO START OF WORK. START OF WORK WILL INDICATE ACCEPTANCE OF CONDITIONS AND FULL RESPONSIBILITY FOR COMPLETED WORK.

VERIFY ALL UNDERGROUND AND ABOVE-GROUND UTILITY LOCATIONS PRIOR TO ANY EXCAVATION. IF UNDERGROUND CONSTRUCTION, UTILITIES OR OBSTRUCTIONS ARE ENCOUNTERED DURING THE EXCAVATION OF PLANTING AREAS OR PITS, IMMEDIATELY INFORM THE OWNER'S CONSTRUCTION REPRESENTATIVE. ALTERNATE LOCATIONS FOR THE PLANT MATERIAL(S) WILL BE SELECTED BY THE ARCHITECT OR AGENT. SUCH CHANCES IN LOCATION SHALL BE MADE BY THE CONTRACTOR WITHOUT ADDITIONAL COMPENSATION.

THE LANDSCAPE CONTRACTOR SHALL BEAR SOLE RESPONSIBILITY FOR ANY AND ALL DAMAGES THAT RESULT FROM HIS ACTIVITIES DUE TO IMPROPER VERIFICATION OF UTILITIES AND/OR OPERATOR ERROR DURING EXCAVATIONS. SEE RELATED CIVIL PLANS FOR ADDITIONAL INFORMATION AND COORDINATE ON-SITE WITH THE GENERAL CONTRACTOR AND OTHER TRADES PRIOR TO START OF WORK.

SITE CONTRACTOR SHALL PROVIDE THE LANDSCAPE CONTRACTOR WITH A FINISH GRADE OF (PLUS OR MINUS) ONE-TENTH OF ONE FOOT. GRADE SHALL BE CLEAR OR DEBRIS AND WEED GROWTH. FINISH GRADES ADJACENT TO PAVING SMALL BE TWO INCHES (2") BELOW TOP OF CURBS, WALKS OR PAVING IN ORDER TO CONTAIN SOD OR MULCH AS SPECIFIED.

PLANT MATERIAL SHALL BE GRADED FLORIDA NO. 1 OR BETTER AS OUTLINED UNDER THE 'GRADES AND STANDARDS FOR NURSERY PLANTS,- CURRENT EDITION STATE OF FLORIDA, DEPARTMENT OF AGRICULTURE AND SHALL CONFORM TO AAN STANDARDS FOR NURSERY STOCK (ANSI 260.1-1980).

NO SUBSTITUTIONS SHALL BE MADE WITHOUT THE EXPLICIT WRITTEN PERMISSION OF THE LANDSCAPE ARCHITECT. PLANS SHALL BE BID BY ALL BIDDERS AS SHOWN. SUBMIT WRITTEN VERIFICATION OF ANY PLANT MATERIAL(S) THAT MAY BE UNAVAILABLE AS SPECIFIED, TO THE LANDSCAPE ARCHITECT.

COORDINATE THE INSTALLATION OF TREES AND PLANTS SO AS TO NOT OBSCURE THE SITE VISIBILITY TRIANGLE AT INTERSECTIONS AND THE VISIBILITY OF DIRECTIONAL SIGNS OR LIGHTS. FIELD ADJUST TREE AND PALM LOCATIONS AS REQUIRED TO AVOID CONFLICT WITH LIGHT POLES, ETC. THE OWNER SHALL PROPERLY MAINTAIN TREES AND PLANT MATERIALS AFTER FINAL ACCEPTANCE IN ORDER TO MAINTAIN UNOBSTRUCTED VISIBILITY FOR PEDESTRIANS AND VEHICLES.

ALL TREES SPECIFIED AS BALLED AND BURLAPPED SHALL BE 'ROOT PLUS GROWERS' TAGGED AND APPROVED TO ENSURE PROPER HARDENING OFF PRIOR TO INSTALLATION ONSITE.

ALL TREES PLANTED USING EITHER A TREE AUGER OR TREE SPADE ARE TO BE CORRECTLY WATER SETTLED TO ENSURE NO FUTURE SETTLING. ALL TREES THAT SETTLE CROOKED WILL BE RESET BY LANDSCAPE CONTRACTOR. ALL HOLES DUG BY EITHER A SPADE OR AUGER ARE TO BE SCORED ALONG ALL SIDES TO ALLOW ROOT GROWTH TO ESCAPE LIMITS OF EXCAVATION.

APPLY "DEVRINOL" SELECTIVE HERBICIDE (DRY FLOWABLE) PER MANUFACTURER'S DIRECTIONS TO ALL PLANT BED AREAS PRIOR TO MULCHING. USE A PROPERLY CALIBRATED GRANULAR APPLICATOR AND DO NOT APPLY CHEMICAL DIRECTLY ONTO LEAVES OF PLANTS.

ALL PLANT BEDS AND TREE RINGS SHALL BE MULCHED WITH A 3" DEPTH LAYER OF PINE BARK MULCH (MEDIUM SIZE CHIPS. DEPTH SHALL BE MEASURED AFTER COMPACTION. REMOVE MULCH FROM CANOPIES OF SHRUBS AND PROPERLY "TUCK-IN" MULCH ALONG EDGES. DO NOT PILE MULCH AROUND THE BASE OF TREE TRUNKS, MULCH RIND SHALL START AT A 3" RADIUS FROM BASE OF TREE TRUNK. PROVIDE A 3' DIAMETER MULCH RING AROUND ALL PROPOSED AND EXISTING TREES WHICH DO NOT FALL WITHIN A MULCHED PLANTING BED OR ARE SURROUNDED BY TURF.

GROUNDCOVER AND SHRUB BEDS SHALL BE PLANTED ON TRIANGULAR SPACING WITH PLANTS INSTALLED AND FACED FOR OPTIMUM GROWTH INTO THE BED. CURVILINEAR BED LINES SHALL BE ACCURATELY SCALED FROM PLANS AND LAID-OUT IN THE FIELD. IF FIELD CONDITIONS ARE DIFFERENT FROM PLANS, IMMEDIATELY NOTIFY THE LANDSCAPE ARCHITECT OR ON-SITE REPRESENTATIVE FOR FIELD ADJUSTMENT OF MATERIALS.

FINISH GRADE TO BE RAKED, LEVEL AND FREE OF WEEDS, ROCKS AND DEBRIS PRIOR TO INSTALLATION OF SOD. LANDSCAPE CONTRACTOR TO NOTIFY LANDSCAPE ARCHITECT IMMEDIATELY IF SITE CONDITIONS ARE NOT ACCEPTABLE. INCONSISTENCY IN SOD QUALITY, GRADE AND INSTALLATION MAY WARRANT REMOVAL AND REINSTALLATION.

SODDING IS REQUIRED IN ALL UNPAVED AREAS WITH THE SITE BOUNDARIES UNLESS OTHERWISE SHOWN OR NOTED. ALL SOD AREAS SHALL BE PLANTED WITH "ST. AUGUSTINE" AS SPECIFIED. SOD SHALL BE REASONABLY FREE FROM PESTS AND WEEDS, LAID IN STAGGERED ROWS WITH NO GAPS, ROLLED, FERTILIZED AND WATERED IMMEDIATELY AFTER INSTALLATION.

FERTILIZE LAWN AREAS WITH 6-6-6 FERTILIZER AT THE RATE OF 8 LBS PER 1,000 S.F. OF LAWN AREA. WATER AFTER FERTILIZATION.

THE IRRIGATION SYSTEM SHALL BE FULLY OPERATING FOR A PERIOD OF TWENTY-FOUR HOURS PRIOR TO START OF PLANTING OPERATIONS. THE LANDSCAPE CONTRACTOR SHALL BE RESPONSIBLE FOR PROVIDING ANY ADDITIONAL HAND-WATERING AS NECESSARY FOR ALL TREES, SHRUBS, GROUNDCOVERS AND LAWN AREAS PRIOR TO FINAL ACCEPTANCE.

THE JOB SITE SHALL BE KEPT ORDERLY AND REASONABLY CLEAN ON A DAILY BASIS DURING CONSTRUCTION OPERATIONS. UPON COMPLETION, THE LANDSCAPE CONTRACTOR SHALL REMOVE ALL DEBRIS AND WASTE GENERATED BY HIS OPERATIONS ON-SITE, INCLUDING THE CLEANING OF WALKS AND PAVING AS NECESSARY.

IN THE EVENT OF A VARIATION BETWEEN THE PLANT LIST AND THE ACTUAL NUMBER OF PLANTS SHOWN OR NOTED ON THE PLANS, THE PLANS SHALL CONTROL.

PLANTS AND TREES SHALL BE SET PLUMB, AT THE SAME GRADE AT WHICH THEY HAVE BEEN GROWN, BEST SIDE FACING PRIME VISIBILITY AND THOROUGHLY WATERED-IN, TO ELIMINATE AIR POCKETS. TREES SET TOO HIGH OR LOW WILL BE REJECTED. VERIFY PROPOSED FINISH GRADES AND SET TREES ACCORDINGLY. SEE DETAILS FOR PLANTING, STAKING AND GUYING. THE LANDSCAPE CONTRACTOR SHALL BE RESPONSIBLE FOR PROPERLY SECURING TREES, PALMS AND LARGE SHRUBS IMMEDIATELY AFTER PLANTING. ALL GUY WIRES SHALL BE FLAGGED AND ALL STAKES SHALL BE DRIVEN FLUSH WITH SURROUNDING GRADE FOR PUBLIC SAFETY.

PLANTING SOIL FOR ALL TREES AND SHRUBS SHALL CONSIST OF 60% PEAT, 20% COMPOST, AND 20% WOOD PRODUCT FOR AERATION. PLANTING MIX SHALL HAVE A pH OF 6.0-6.5 / MIX 75% PLANTING SOIL WITH 25% ON-SITE SOIL FOR PLANTING SOIL BACKFILL. BACKFILL ALL TREES AND SHRUBS AT THE FOLLOWING RATE:

TREES 3.5" CAL. AND GREATER	=1 CUBIC YARD EACH TREES
1- 3" CAL./30 GAL.	=1/2 CUBIC YARD EACH
7-15 GALLON CONTAINERS SIZE	=1/4 CUBIC YARD EACH
3-5 GALL0N CONTAINER SIZE	=35 PLANTS PER CUBIC YARD
1-2 GALLON CONTAINER SIZE	=65 PLANTS PER CUBIC YARD
ROOTED CUTTING/4- POTS	=6" DEPTH OF ANN-UAL BED MIX

ROOTED CUTTINGS AND 4" POT MATERIAL SHALL BE PLANTED IN A 6" DEPTH PREPARED BED CONTAINING AN "ANNUAL BED MIX" COMPOSED OF 1/3 PEAT, 1/3 COMPOSTED PINE BARK, 1/3 SAND AND DOLOMITE pH 6.0-6.5. FERTILIZE WITH "OSMOCOTE' PER MANUFACTURER'S DIRECTIONS. TOP DRESS 'WITH I- LAYER OF SPECIFIED FINE MULCH.

SHRUBS SHALL BE PLANTED IN CIRCULAR PLANT PITS WITH A DIAMETER OF 16" GREATER THAN THE ROOTBALL OF CONTAINER. TREES SHALL BE PLANTEZ IN CIRCULAR PITS WITH A DIAMETER OF 12" GREATER THAN ROOTBALL OR CONTAINER AND BACKFILLED WITH PLANTING SOIL MIX.

REMOVE ALL PLANT LABELS, TAGS, FLAGGING TAPE AND RIBBON FROM ALL TREES, AND SHRUBS UPON FINAL ACCEPTANCE OF THE LANDSCAPE.

FERTILIZE TREES, SHRUBS AND GROUNDCOVERS WITH - "SIERRA" 7.5 GRAM TABLETS PER MANUFACTURER'S DIRECTIONS AND AT THE FOLLOWING RATE:

LARGER CONTAINER PLANTS/TREES	=1 TABLET PER GALLON SIZE
5 GALLON CONTAINER	=4 - 5 TABLETS PER PLANT
3 GALLON CONTAINER	=3 - 4 TABLETS PER PLANT
1 GALLON CONTAINER	=2 - 3 TABLET PER PLANT

ALL PLANT MATERIAL SHALL BE GUARANTEED FOR ONE (1) YEAR AFTER FINAL ACCEPTANCE. ALL TREES, PLANTS AND/OR GRASSING NOT FOUND IN A HEALTHY GROWING CONDITI0N AT THE END OF THE GUARANTEE PERIOD SHALL BE REMOVED FROM THE SITE AND REPLACED WITHIN TEN (10) DAYS AFTER WRITTEN NOTICE. ALL PLANT REPLACEMENTS SHALL BE OF THE SAME KIND AND SIZE AS SPECIFIED IN THE PLANT LIST. THE REPLACEMENTS SHALL BE FURNISHED, AND INSTALLED AS HEREIN SPECIFIED AT NO ADDITIONAL COST TO THE OWNER. THE IRRIGATION SYSTEM SHALL BE GUARANTEED FOR ONE (1) YEAR AFTER FINAL ACCEPTANCE FROM DEFECTS IN MATERIALS AND WORKMANSHIP.

AN 'AS-BUILT" OF THE LANDSCAPE AND IRRIGATION PLANS SHALL BE MADE BY THE LANDSCAPE AND IRRIGATION CONTRACTOR. THE "AS-BUILT" SHALL BE UP-DATED DAILY AND SHALL BE KEPT ON-SITE AT ALL TIMES DURING THE CONSTRUCTION PERIOD. ANY AND ALL DEVIATIONS FROM THE ORIGINAL CONSTRUCTION DOCUMENTS SHALL BE DULY AND ACCURATELY RECORDED. A REPRODUCIBLE OF EACH 'AS-BUILT" SHALL BE PROVIDED BY THE LANDSCAPE AND IRRIGATION CONTRACTOR TO THE OWNER'S CONSTRUCTION REPRESENTATIVE AND TO THE LANDSCAPE ARCHITECT PRIOR TO FINAL ACCEPTANCE AND PAYMENT OF RETAINAGE.

AT THE TIME OF FINAL ACCEPTANCE, THE LANDSCAPE CONTRACTOR SHALL PROVIDE THE OWNER WITH A MAINTENANCE MANUAL CONTAINING INSTRUCTIONS FOR THE PROPER CARE OF ALL MATERIALS SPECIFIC TO THE JOB. INCLUDE IRRIGATION TIMECLOCK OPERATING DIRECTIONS AND MANUFACTL'RER'S LITERATURE TO OWNER'S REPRESENTATIVE. LANDSCAPE CONTRACTOR SHALL SUPPLY THE OWNER WITH A BID TO PROVIDE YEARLY MAINTENANCE OF THE PROJECT.

THE OWNER SHALL BE RESPONSIBLE FOR THE PROPER MAINTENANCE AND WATERING OF THE LANDSCAPING AND TURF AFTER FINAL ACCEPTANCE.

HEIDT DESIGN
Civil Engineering • Planning & GIS
Transportation Engineering
Ecological Services • Landscape Architecture
Engineering Business Certificate of Authorization No. 28782
Landscape Architecture Certificate of Authorization No. LC26000405
5806-B Breckenridge Pkwy.
Tampa, Florida 33610
Office: 813-253-5311
Fax: 813-464-7629
www.HeidtDesign.com

RANGELAND BOULEVARD - WEST EXTENSION PHASE 2

LANDSCAPE NOTES AND DETAILS

PREPARED FOR: WS-TSR, LLC

	DATE	DESCRIPTION
1	12/30/2015	INITIAL REVIEW SUBMITTAL

PROJECT NO:	TSR SR 1072
FILE:	L-470
DESIGN BY:	STEELE
DRAWN BY:	STEELE

FLORIDA REGISTERED LANDSCAPE ARCHITECT

KEVEN JOHN STEELE
DATE:________________
REGISTRATION NO.LA6667179

L-470

R:\STARKEY RANCH\RANGELAND BLVD WEST EXT PHASE 2\ENGINEERING\L-470.DWG-L-470 2015/12/30 9:54 AM MARK JONES

© COPYRIGHT 2015, HEIDT DESIGN, LLC. ALL RIGHTS RESERVED. NO DOCUMENTATION (INCLUDING BUT NOT LIMITED TO DRAWINGS OR EXHIBITS) MAY BE ... HEIDT DESIGN, LLC. IN ADVANCE. CONSENT ... GOVERNMENTAL AGENCIES TO REPRODUCE THIS DOCUMENTATION IN COMPLIANCE WITH F.S. CHAPTER 119.