SECTION 01, TOWNSHIP 26 SOUTH, RANGE 18 EAST
SECTION 06, TOWNSHIP 26 SOUTH, RANGE 19 EAST
PASCO COUNTY, FLORIDA

BENCHMARK

CONTROL BENCHMARK: FOUND CONCRETE MONUMENT, STAMPED V 681 2007. LOCATED 176.3' EAST OF THE APPROXIMATE CENTERLINE OF EHREN CUTOFF, 57.2' NORTH OF THE APPROXIMATE CENTERLINE OF PARKWAY BOULEVARD AND 1.8' SOUTH OF A CARSONITE WITNESS POST. PUBLISHED ELEVATION = 78.05' (NAVD88)

SITE BENCHMARK # 1: SET 5/8" IRON ROD (DAVRIS CONTROL).
ELEVATION = 76.79' (NAVD88)

SITE BENCHMARK # 2: SET 5/8" IRON ROD (DAVRIS CONTROL).
ELEVATION = 80.17' (NAVD88)

LEGEND

(C)	CALCULATED MEASUREMENT
(D)	DESCRIPTION MEASUREMENT
(F)	FIELD MEASUREMENT
(P)	PLAT MEASUREMENT
(R)	RECORD MEASUREMENT
A/C	AIR CONDITIONER
CONC	CONCRETE
ELEV	ELEVATION
HYD	FIRE HYDRANT
ID	IDENTIFICATION
INV	INVERT
LB	LICENSED BUSINESS NUMBER
LP	LIGHT POLE
NAVD	NORTH AMERICAN VERTICAL DATUM
NGVD	NATIONAL GEODETIC VERTICAL DATUM
OHW	OVERHEAD WIRE
O.R.	OFFICIAL RECORDS
PSM	PROFESSIONAL SURVEYOR AND MAPPER
R/W	RIGHT-OF-WAY
TOB	TOP OF BANK
TOS	TOE OF SLOPE
TYP	TYPICAL
UB	UTILITY BOX
UP	UTILITY POLE
UR	UTILITY RISER
WM	WATER METER
WV	WATER VALVE
+X.00'	SPOT ELEVATION

TREE PROTECTION BARRICADE

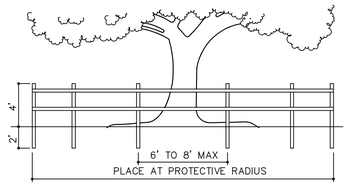

1. VERTICAL MEMBERS TO BE 2"x2" WOOD STAKES.
2. HORIZONTAL MEMBERS TO BE 1"x4" WOOD OR APPROVED SUBSTITUTE.
3. PLACE PROTECTIVE BARRIER AT DRIPLINE OR PER LOCAL CODE.

GENERAL NOTES

SEE DRAWING "C7" FOR GENERAL NOTES

SILT FENCE DETAIL

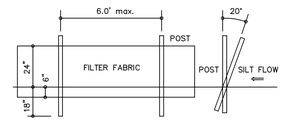

1. FILTER FABRIC TO CONFORM WITH F.D.O.T. SPECIFICATIONS (SEC. 985)
2. POSTS TO BE 2"x4" WOOD POST OR 1.3 LB/FT STEEL POST.
3. POST POSITION TO BE CANTED (20°) OR VERTICAL (90°).
4. DO NOT DEPLOY IN A MANNER THAT SILT FENCE WILL ACT AS A DAM ACROSS PERMANENT FLOWING WATER COURSES.

KEYNOTES

1. CONTRACTOR TO INSTALL SILT FENCE PER DETAIL ON THIS SHEET.
2. CONTRACTOR TO INSTALL TREE PROTECTION BARRICADE PER DETAIL ON THIS SHEET.
3. CONTRACTOR TO REMOVE EXISTING TREE.
4. CONTRACTOR TO DEMO EXISTING FENCE AND GATE.
5. CONTRACTOR TO DEMO EXISTING ASPHALT AND CONCRETE CURB.
6. CONTRACTOR TO COORDINATE WITH POWER COMPANY AND REMOVE EXISTING OVERHEAD POWER LINES AND POWER POLES,

LEGAL DESCRIPTION

A PARCEL OF LAND LYING IN SECTION 1, TOWNSHIP 26 SOUTH, RANGE 18 EAST AND SECTION 6, TOWNSHIP 26 SOUTH, RANGE 19 EAST, PASCO COUNTY, FLORIDA, DESCRIBED AS FOLLOWS: BEGINNING AT THE SOUTHEAST CORNER OF THE SOUTHEAST 1/4 OF THE NORTHEAST 1/4 OF SAID SECTION 1; THENCE NORTH 89°05'48" WEST, ALONG THE SOUTH LINE OF THE SOUTHEAST 1/4 OF THE NORTHEAST 1/4, A DISTANCE OF 1324.88 FEET TO THE SOUTHWEST CORNER OF THE SOUTHEAST 1/4 OF THE NORTHEAST 1/4; THENCE NORTH 00°31'20" EAST ALONG THE WEST LINE OF THE SOUTHEAST 1/4 OF THE NORTHEAST 1/4, A DISTANCE OF 713.30 FEET TO THE SOUTHEAST CORNER OF THE NORTH 600.00 FEET OF THE SOUTHWEST 1/4 OF THE NORTHEAST 1/4; THENCE NORTH 89°23'21" WEST, ALONG THE SOUTH LINE OF THE NORTH 600.00 FEET OF THE SOUTHWEST 1/4 OF THE NORTHEAST 1/4, A DISTANCE OF 215.54 FEET TO A POINT OF CURVATURE; THENCE 214.06 FEET ON THE ARC OF A CURVE TO THE LEFT, WITH A RADIUS OF 209.94 FEET, SUBTENDED BY A CHORD OF 204.91 FEET, CHORD BEARING SOUTH 61°24'01" WEST, TO A POINT ON A NON TANGENT LINE AND A POINT ON THE SOUTH LINE OF THE NORTH 700.00 FEET OF THE SOUTHWEST 1/4 OF THE NORTHEAST 1/4; THENCE NORTH 89°23'21" WEST, ALONG THE SOUTH LINE OF THE NORTH 700.00 FEET OF THE SOUTHWEST 1/4 OF THE NORTHEAST 1/4, A DISTANCE OF 931.99 FEET TO THE SOUTHWEST CORNER OF THE NORTH 700.00 FEET OF THE SOUTHWEST 1/4 OF THE NORTHEAST 1/4; THENCE NORTH 00°30'29" EAST, ALONG THE WEST LINE OF THE SOUTHWEST 1/4 OF THE NORTHEAST 1/4, A DISTANCE OF 700.00 FEET TO THE NORTHWEST CORNER OF THE SOUTHWEST 1/4 OF THE NORTHEAST 1/4; THENCE SOUTH 89°23'21" EAST, ALONG THE NORTH LINE OF THE SOUTHWEST 1/4 OF THE NORTHEAST 1/4, A DISTANCE OF 1326.71 FEET TO THE NORTHEAST CORNER OF THE SOUTHWEST 1/4 OF THE NORTHEAST 1/4, ALSO THE NORTHWEST CORNER OF THE SOUTHEAST 1/4 OF THE NORTHEAST 1/4; THENCE SOUTH 89°23'29" EAST ALONG THE NORTH LINE OF THE SOUTHEAST 1/4 OF THE NORTHEAST 1/4, A DISTANCE OF 1326.77 FEET TO THE NORTHEAST CORNER OF THE SOUTHEAST 1/4 OF THE NORTHEAST 1/4; THENCE SOUTH 00°36'20" WEST, ALONG THE EAST LINE OF THE SOUTHEAST 1/4 OF THE NORTHEAST 1/4, A DISTANCE OF 836.44 FEET; THENCE SOUTH 88°31'24" EAST A DISTANCE OF 921.25 FEET MORE OR LESS TO A POINT ON THE WESTERLY RIGHT OF WAY LINE OF EHREN CUTOFF (STATE ROAD 583); THENCE SOUTH 09°34'03" WEST, ALONG SAID RIGHT OF WAY LINE, A DISTANCE OF 603.32 FEET; THENCE LEAVING SAID RIGHT OF WAY LINE, NORTH 88°31'24" WEST, A DISTANCE OF 250.25 FEET; THENCE NORTH 50°36'10" WEST, A DISTANCE OF 483.77 FEET; THENCE SOUTH 00°36'20" WEST, A DISTANCE OF 187.80 FEET TO A POINT ON THE SOUTH BOUNDARY OF THE SOUTHWEST 1/4 OF THE NORTHWEST 1/4 OF SAID SECTION 6; THENCE NORTH 87° 19'57" WEST, ALONG THE SOUTH BOUNDARY OF THE SOUTHWEST 1/4 OF THE NORTHWEST 1/4 OF SECTION 6, TOWNSHIP 26 SOUTH, RANGE 19 EAST, PASCO COUNTY, FLORIDA, A DISTANCE OF 200.00 FEET TO THE POINT OF BEGINNING. CONTAINING 70.80 ACRES MORE OR LESS.

SURVEYOR NOTES

1. THIS SURVEY MAP AND/OR REPORT OR THE COPIES HEREOF ARE NOT VALID WITHOUT THE SIGNATURE AND THE ORIGINAL RAISED SEAL OF A FLORIDA LICENSED SURVEYOR AND MAPPER. ADDITIONS OR DELETIONS TO SURVEY MAPS OR REPORTS BY OTHER THAN THE SIGNING PARTY OR PARTIES ARE PROHIBITED WITHOUT WRITTEN CONSENT OF THE SIGNING PARTY OR PARTIES.
2. THIS DOCUMENT CONSISTS OF 2 SHEETS AND IS NOT FULL OR COMPLETE WITHOUT ALL SHEETS.
3. THIS OFFICE HAS NOT ABSTRACTED THIS FOR ANY RECORDED CLAIMS OF TITLE EASEMENTS OR RESTRICTIONS. THE PRESENCE OR ABSENCE OF ANY SUCH CLAIMS IS NOT CERTIFIED HEREON.
4. NO UNDERGROUND IMPROVEMENTS OR UTILITIES WERE LOCATED EXCEPT THOSE SHOWN HEREON.
5. ELEVATIONS ARE BASED ON THE NORTH AMERICAN VERTICAL DATUM OF 1988.
6. UNLESS NOTED OTHERWISE, NO UNDERGROUND FOUNDATIONS WERE LOCATED.
7. DAVRIS, INC. ACCEPTS NO RESPONSIBILITY FOR THE IDENTIFICATION OF THE TREE SPECIES SHOWN HEREON. EVERY EFFORT HAS BEEN MADE TO PROPERLY IDENTIFY THE TREES SHOWN HEREON, HOWEVER TREE IDENTIFICATION IS OUTSIDE THE AREA OF EXPERTISE OF A PROFESSIONAL LAND SURVEYOR. THE TREE TYPES SHOWN HEREON ARE FOR INFORMATIONAL PURPOSES ONLY AND SHOULD ONLY BE USED AFTER CONFIRMATION BY A CERTIFIED ARBORIST OR OTHER SUCH PROFESSIONAL.
8. THE COORDINATE VALUES SHOWN HEREON ARE BASED ON THE NORTH AMERICAN DATUM OF 1983 (NAD83) AND WERE ESTABLISHED TO THIRD ORDER CLASS I ACCURACY AS DEFINED BY THE STANDARDS AND SPECIFICATIONS FOR GEODETIC CONTROL NETWORKS AS PUBLISHED BY THE FEDERAL GEODETIC CONTROL COMMITTEE, DATED SEPTEMBER 1984 OR LATEST EDITION.

EROSION CONTROL NOTES

ALL EROSION CONTROL MEASURES (SILT BARRIERS) MUST BE INSTALLED PRIOR TO THE START OF CONSTRUCTION AND REMAIN IN PLACE THROUGHOUT CONSTRUCTION. ENCROACHMENT OR FAILURE TO MAINTAIN THESE BARRICADES COULD RESULT IN ENFORCEMENT ACTION WHICH MAY INCLUDE CITATIONS AND/OR PERMIT REVOCATION. SILTATION BARRIERS SHALL BE MAINTAINED AND REPAIRED AT THE END OF EACH WORKING DAY. HAY BALES SHALL BE INSTALLED ONCE PERIMETER GRADING IS COMPLETED. STORMWATER FACILITIES SHALL HAVE HAY BALES PLACED AROUND THEIR ENTRANCES TO PREVENT SEDIMENT FROM BEING TRANSPORTED INTO THE STORMWATER SYSTEM. HAY BALES SHALL BE PLACED ALONG THE PERIMETER OF ALL DOWNSTREAM BOUNDARIES TO PROVIDE FILTRATION OF RUNOFF DURING CONSTRUCTION. THE HAY BALES SHALL REMAIN IN PLACE UNTIL THE ENGINEER HAS APPROVED THE VEGETATIVE COVER ALONG EMBANKMENTS PROVIDING RUNOFF TO THE PERIMETER. IT IS THE CONTRACTOR'S RESPONSIBILITY TO MAINTAIN SOIL EROSION CONTROL DEVICES. IF AT ANY TIME DRAINAGE STRUCTURES OR EROSION CONTROL DEVICES BECOME DAMAGED OR INOPERABLE, IT IS THE CONTRACTORS RESPONSIBILITY TO REPAIR THEM. THE CONTRACTOR IS EXPECTED, AT THE END OF EACH DAY, TO HAVE THE SITE GRADED IN SUCH A WAY THAT ADJACENT PROPERTIES ARE NOT ADVERSELY IMPACTED BY EROSION OR SEDIMENT LEAVING THE SITE. CLEARED AREAS SHALL BE STABILIZED EARLY IN THE CONSTRUCTION PROCESS AND IF NATURAL PRECIPITATION DOES NOT PROVIDE PERIODIC WETTING OF THE SITE, THEN THE CONTRACTOR SHALL PROVIDE A METHOD OF SPRAYING THE SITE TO PREVENT WIND EROSION.

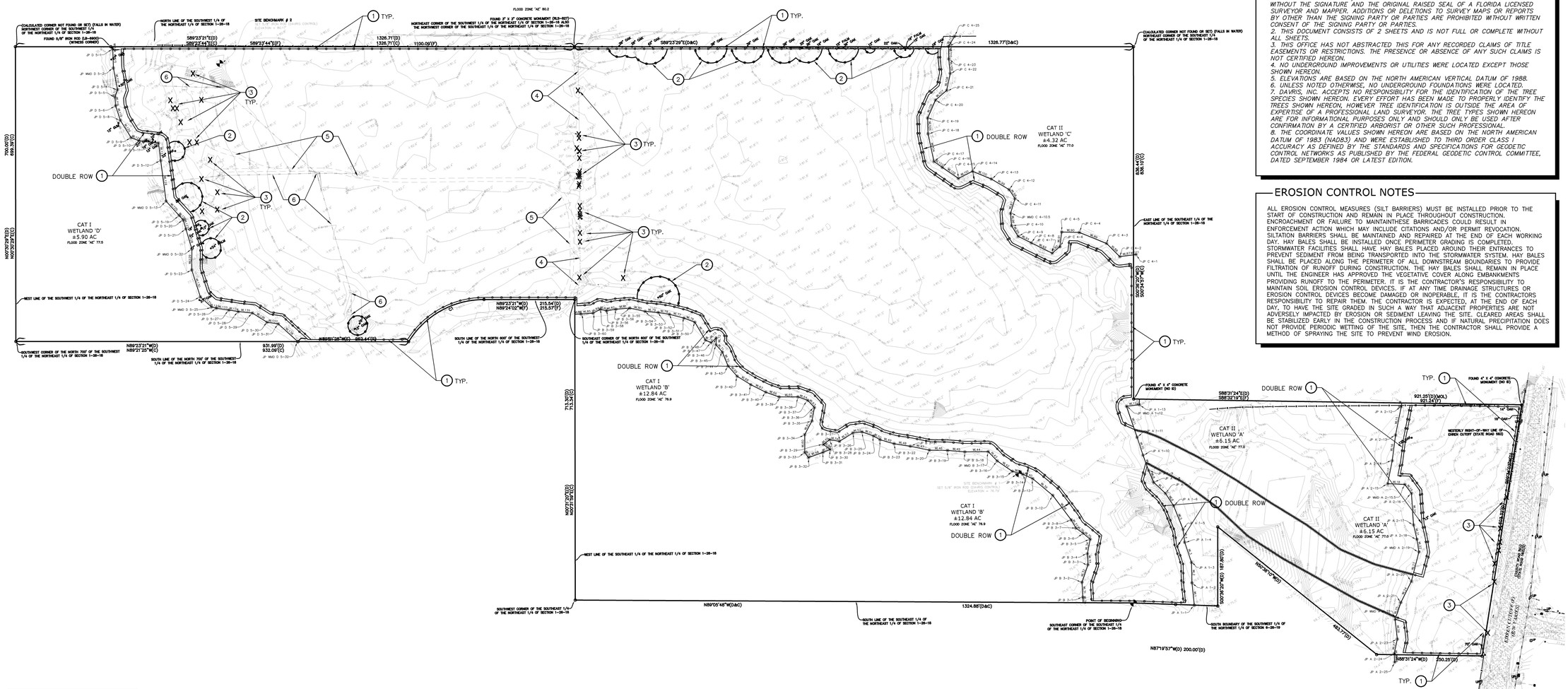

DAVRIS, INC.
CERTIFICATE OF AUTHORIZATION # 7968
5830 Nebraska Ave.
New Port Richey, FL 34652
Phone: (727) 232-3800

TYPE OF SURVEY: BOUNDARY AND TOPOGRAPHIC
DATE OF SURVEY: MAY 07, 2015
CERTIFIED TO: SPRING ENGINEERING, INC.

NORTH

EXISTING CONDITIONS

SCALE: 1" = 120'

120 60 0 120 240

THIS DRAWING AND THE DESIGN SHOWN ARE THE PROPERTY OF SPRING ENGINEERING, INC. AND ARE NOT TO BE REPRODUCED, COPIED, PUBLISHED, OR USED IN WHOLE OR PART WITHOUT WRITTEN CONSENT. THEY ARE TO BE USED ONLY FOR THE SITE AND PROJECT IDENTIFIED AND SHALL BE RETURNED UPON REQUEST.

100%
CONSTRUCTION DOCS.
ISSUE DATE: 02.10.16

REVISIONS

REV	DATE	DESCRIPTION

YANCEY B. ABUTON
P.E. NO. 63766
DATE

PRISTINE LAKE PRESERVE

Ehren Cutoff and Parkway Blvd
Pasco County, Florida

CONTRACT DATE:
August 20, 2015

SPRING ENGINEERING, INC.
ENGINEERING • LAND PLANNING • ARCHITECTURE
3014 U.S. HWY 19, HOLIDAY, FL (727) 938-1516
FL COA NO. 00005158 & LICENSE NO. AA-C001747

EXISTING CONDITIONS PLAN

DESIGNED BY: JAY
DRAWN BY: JAY
CHECKED BY: RPD
JOB NO.
2015-11

SHEET NO.
C1.0

PRISTINE LAKE PRESERVE

Ehren Cutoff and Parkway Blvd
Pasco County, Florida

Owner:

PRISTINE LAKE, LLC

3840 Land O' Lakes Blvd
Land O' Lakes, Florida 34639
E-Mail: ktsb@southerncraftedhomes.com

Architect/Engineer:

SPRING ENGINEERING, INC.

3014 U.s. Highway 19
Holiday, Florida 34691
(727) 938-1516 - sei2@verizon.net
Roland P. Dove, P.E.
Jay Doucette

Surveyor:

DAVRIS SURVEYING & MAPPING, INC.

5830 Nebraska Ave.
New Port Richey, Florida 34652
Chris Chittum (727) 232-3800
c3@davrisinc.com

Location Map:

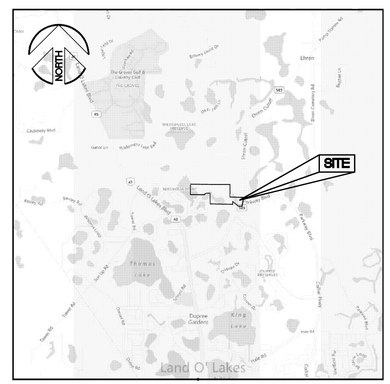

SECTION 01, TOWNSHIP 26 SOUTH, RANGE 18 EAST
SECTION 06, TOWNSHIP 26 SOUTH, RANGE 19 EAST

Index of Drawings:

T1.0 TITLE SHEET
C1.0 EXISTING CONDITIONS
C2.0 OVERALL SITE PLAN
C2.1 ENLARGED SITE PLAN
C2.2 ENLARGED SITE PLAN
C2.3 DETAILS AND SECTIONS
C2.4 POND SECTIONS
C3.0 PAVING, GRADING AND DRAINAGE PLAN
C3.1 PAVING, GRADING AND DRAINAGE PLAN
C3.2 CONSTRUCTION SURFACE WATER MANAGEMENT PLAN
C3.3 NPDES NOTES AND DETAILS
C3.4 PLAN AND PROFILE
C3.5 PLAN AND PROFILE
C3.6 PLAN AND PROFILE
C3.7 PLAN AND PROFILE
C3.8 PLAN AND PROFILE
C3.9 PLAN AND PROFILE
C4.0 UTILITY PLAN
C4.1 UTILITY PLAN
C4.2 UTILITY DETAILS
C4.3 PUMP STATION DETAILS
C5.0 LANDSCAPE PLAN
C5.1 LANDSCAPE PLAN
C5.2 LANDSCAPE DETAILS
C6.0 GENERAL NOTES

PRELIMINARY / CONSTRUCTION STORMWATER MANAGEMENT PLAN

SPRING ENGINEERING, INC.
ARCHITECTURE - ENGINEERING - LAND PLANNING
3014 U.S. HWY. 19, HOLIDAY, FL. (727) 938-1516

THE PROPOSED DRAINAGE PLAN WAS BASED ON THE EXISTING FIELD CONDITIONS OF THE ABUTTING PROPERTY.

THIS PLAN HAS BEEN CERTIFIED BY THE DESIGN ENGINEER TO BE IN SUBSTANTIAL CONFORMANCE WITH THE MANUAL OF UNIFORM MINIMUM STANDARDS FOR DESIGN, CONSTRUCTION AND MAINTENANCE OF HIGHWAYS, AS REQUIRED BY SECTION 336.045, FLORIDA STATUTES.

THIS DRAWING AND THE DESIGN SHOWN ARE THE PROPERTY OF SPRING ENGINEERING, INC. AND ARE NOT TO BE REPRODUCED, COPIED, PUBLISHED, OR USED IN WHOLE OR PART WITHOUT WRITTEN CONSENT. THEY ARE TO BE USED ONLY FOR THE SITE AND PROJECT IDENTIFIED AND SHALL BE RETURNED UPON REQUEST.

100%
CONSTRUCTION DOCS.
ISSUE DATE: 02.10.16

REVISIONS

REV	DATE	DESCRIPTION

YANCEY B. ABUTON
P.E. NO. 63766
DATE

NOT VALID WITHOUT SIGNATURE AND ORIGINAL RAISED SEAL OF A FLORIDA LICENSED ENGINEER

PRISTINE LAKE PRESERVE
Ehren Cutoff and Parkway Blvd
Pasco County, Florida

CONTRACT DATE:
August 20, 2015

SPRING ENGINEERING, INC.
ENGINEERING • LAND PLANNING • ARCHITECTURE
3014 U.S. HWY 19, HOLIDAY, FL (727) 938-1516
FL COA NO. 00005158 & LICENSE NO. AA-C001747

TITLE SHEET

DESIGNED BY: JAY
DRAWN BY: JAY
CHECKED BY: RPD
JOB NO.
2015-11
SHEET NO.
T1.0

SECTION 01, TOWNSHIP 26 SOUTH, RANGE 18 EAST
SECTION 06, TOWNSHIP 26 SOUTH, RANGE 19 EAST
PASCO COUNTY, FLORIDA

TRACTS

TRACT	DESCRIPTION	AREA
A	ROAD RIGHT OF WAY	7.18 AC
B	LANDSCAPE–DRAINAGE	3.25 AC
C	DRAINAGE AREA	0.66 AC
D	DRAINAGE AREA	3.43 AC
E	BOAT RAMP–DOCK	0.34 AC
F	COMMUNITY PARK	1.68 AC
G	DRAINAGE AREA	0.34 AC
H	WETLAND–C	4.32 AC
I	WETLAND–A	3.82 AC
J	WETLAND–B	12.84 AC
K	WELAND–D	5.90 AC
L	WETLAND–A	1.42 AC
M	COMMERCIAL LOTS	2.43 AC
1–120	RESIDENTIAL LOTS	23.19 AC
	TOTAL LAND AREA	70.80 AC

FIRE PROTECTION NOTES

A. ALL PROJECTS MUST COMPLY WITH PASCO COUNTY FIRE HYDRANT ORDINANCE No. 46–51.

B. FIRE HYDRANTS SHALL BE INSTALLED AND IN SERVICE PRIOR TO THE ACCUMULATION OF COMBUSTIBLES.

C. PER THE NATIONAL FIRE PROTECTION ASSOCIATION, NFPA–1, 16.4.3.1.3: WHERE UNDERGROUND WATER MAINS AN HYDRANTS ARE TO BE PROVIDED, THEY SHALL BE INSTALLED, COMPLETED, AND IN SERVICE PRIOR TO CONSTRUCTION WORK.

D. PER NFPA–1, 18.3.4.1: CLEARANCES OF 7 FEET IN FRONT OF AND TO THE SIDES OF THE FIRE HYDRANT WITH A 4 FOOT CLEARANCE TO THE REAR MUST BE MAINTAINED AT ALL TIMES.

E. GATED ENTRIES REQUIRE A SIREN OPERATING SYSTEM OR A 3M OPTICOM SYSTEM FOR EMERGENCY ACCESS.

STREET SIGNS

1	D3
2	R1–1 (30"x30")
3	R2–1 20 MPH
4	R8–3a (24"x24") "ANY STREET"
5	OM4–1 (30"x30") RED/RED
6	W14–2A (8"x36")

STREET SIGNS GENERAL NOTES

A) All traffic control devices shall be installed in conformance with the Manual on Uniform Traffic Control Devices and the Florida Department of Transportation standards.

B) Street name signs shall be 9–inch on all road classifications. All signs shall have a 6–inch series B letters. All street name signs on private roads shall be standard D3 street name signs with the colors reversed, white background with green letters and border. At intersections with county or state maintained roads; the county or state maintained road shall be green background with white letters and border.

C) Any traffic control device for a private roadway placed in a county or state Right–of–Way shall be installed on the appropriate breakaway post assembly.

PROJECT DATA

PROJECT NAME: PRISTINE LAKES PRESERVE

OWNER: PRISTINE LAKE, LLC
3840 LAND O' LAKES BLVD
LAND O' LAKES, FLORIDA 34639
ktsb@southerncraftedhomes.com

ENGINEER: SPRING ENGINEERING, INC.
3014 US HIGHWAY 19
HOLIDAY, FLORIDA 34691
PHONE: (727) 938–1516
FAX: (727) 942–4174

SURVEYOR: DAVRIS SURVEYING & MAPPING, INC.
5830 NEBRASKA AVE.
NEW PORT RICHEY, FLORIDA 34652
PHONE: (727) 232–3800

SITE DATA

PARCEL I.D. #: 01–26–18–0000–00400–0000 (20.05 AC)
01–26–18–0000–00500–0000 (20.61 AC)
01–26–18–0000–00400–0040 (19.95 AC)
06–26–19–0000–00100–0058 (7.03 AC)
06–26–19–0000–00100–0059 (3.41 AC)
71.05 AC

LAND USE: VACANT
ZONING / FUTURE LAND USE: MPUD / RES–3, RES–6

MPUD – MASTER PLANNED UNIT DEVELOPMENT
REZONING PETITION NO. 7141– MAY 20, 2015
NORTH: AR / RES–3, RES–6
SOUTH: AR, R1 / RES–3, RES–6
WEST: AR, R1 / RES–3, RES–6
EAST: AR, PUD / RES–3, RES–6

FLOOD ZONE: 'X' AND 'AE' PER FLOOD INSURANCE RATE MAP 12101 C 0239 F, DATED SEPTEMBER 26, 2014. (ELEV. 77.0)

BUILDING HEIGHT: 35'–0" MAX.

TOTAL RESIDENTIAL UNITS: 120 UNITS TOTAL
DENSITY: 120 UNITS / 70.804 ACRES = 1.69 UNITS/ACRE

BUILDING SETBACKS:
20' FROM PUBLIC R/W
15' FROM PARCEL BOUNDARY
5' SIDE YARD

BUFFER YARDS: SINGLE FAMILY
NORTH: 15' TYPE 'D' BUFFER
SOUTH: NONE
WEST: NONE
EAST: 15' TYPE 'D' BUFFER

SITE AREA: (TOTAL SITE AREA = 70.80 ACRES)

PROJECT AREA:	1,759,040 SF =	40.38 AC	100.0 %
– BLDG FOOTPRINTS (ALL)		8.88 AC	22.0 %
– NEW ASPHALT PAVING/ CURB		4.94 AC	12.2 %
– NEW DRIVEWAY/SIDEWALK		5.05 AC	12.5 %
– LANDSCAPING		18.50 AC	45.8 %
– STORMWATER POND		3.01 AC	7.5 %
– PERVIOUS AREA		18.50 AC	45.8 %
– IMPERVIOUS AREA		21.88 AC	52.2 %

UTILITY COMPANIES:
WATER: PASCO COUNTY UTILITIES
IRRIGATION (RECLAIMED): PASCO COUNTY UTILITIES
SEWER: PASCO COUNTY UTILITIES
ELECTRIC: WITHLACOOCHEE RIVER ELECTRIC
TELEPHONE: VERIZON
FIRE: PASCO COUNTY FIRE RESCUE

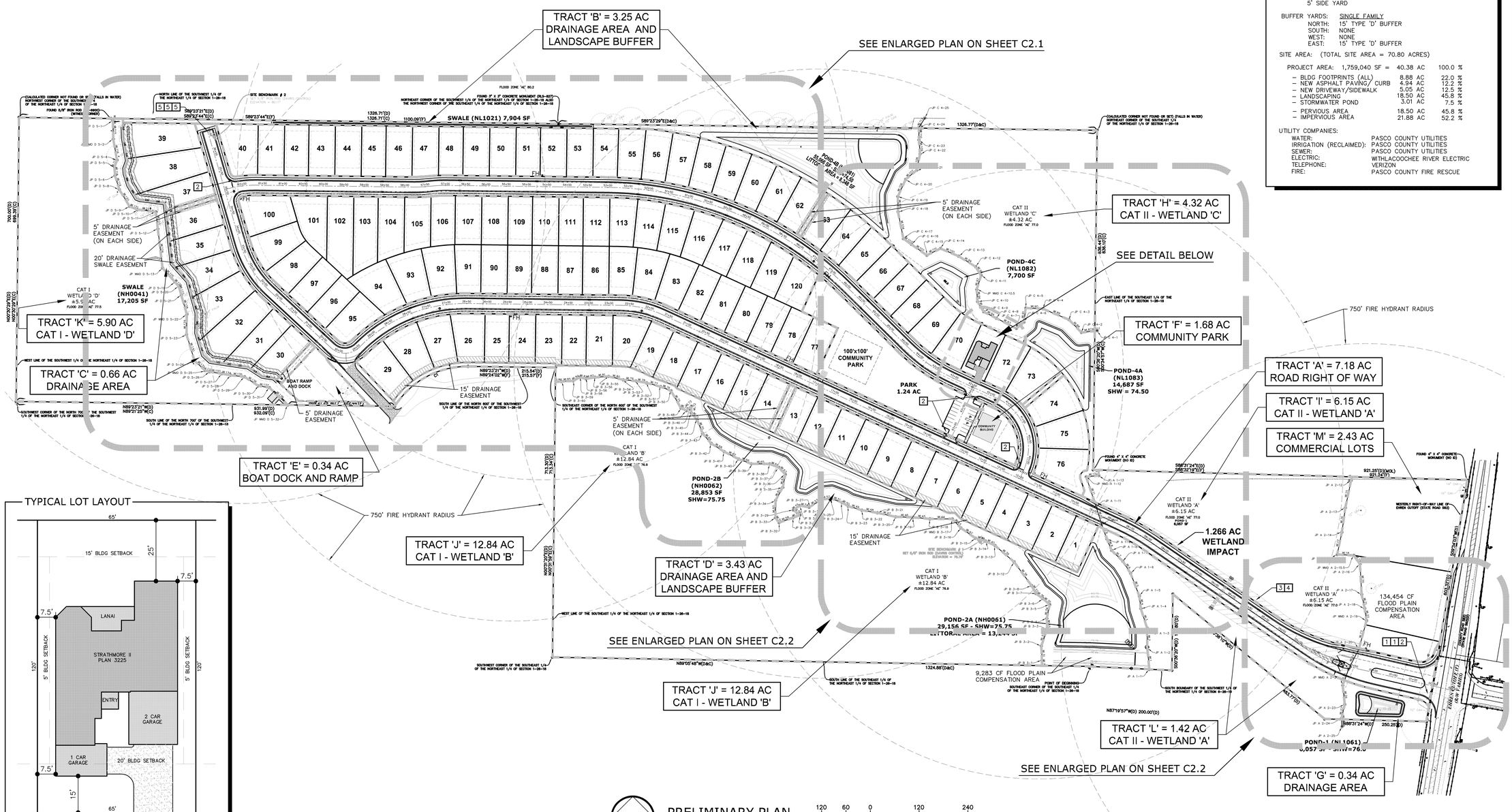

PRELIMINARY PLAN
SCALE: 1"= 120'

THIS DRAWING AND THE DESIGN SHOWN ARE THE PROPERTY OF SPRING ENGINEERING, INC. AND ARE NOT TO BE REPRODUCED, COPIED, PUBLISHED, OR USED IN WHOLE OR PART WITHOUT WRITTEN CONSENT. THEY ARE TO BE USED ONLY FOR THE SITE AND PROJECT IDENTIFIED AND SHALL BE RETURNED UPON REQUEST.

100%
CONSTRUCTION DOCS.
ISSUE DATE: 02.10.16

REVISIONS

REV	DATE	DESCRIPTION

YANCEY B. ABUTON
P.E. NO. 63766
DATE

PRISTINE LAKE PRESERVE

Ehren Cutoff and Parkway Blvd
Pasco County, Florida

CONTRACT DATE:
August 20, 2015

SPRING ENGINEERING, INC.
ENGINEERING • LAND PLANNING • ARCHITECTURE
3014 U.S. HWY 19, HOLIDAY, FL (727) 938–1516
FL COA NO. 00005158 & LICENSE NO. AA–C001747

SITE PLAN

DESIGNED BY: JAY
DRAWN BY: JAY
CHECKED BY: RPD
JOB NO.
2015-11

SHEET NO.
C2.0

SECTION 01, TOWNSHIP 26 SOUTH, RANGE 18 EAST
SECTION 06, TOWNSHIP 26 SOUTH, RANGE 19 EAST
PASCO COUNTY, FLORIDA

SITE KEY NOTES

1. CONTRACTOR TO INSTALL NEW ASPHALT PAVEMENT PER DETAIL ON SHEET C2.1.
2. CONTRACTOR TO INSTALL NEW ELECTRIC SWING GATE.
3. NEW 6" WHITE THERMOPLASTIC PAINTED STRIPE.
4. CONTRACTOR TO INSTALL NEW 4" THICK CONCRETE SIDE WALK PER DETAIL ON SHEET C2.1.
5. CONTRACTOR TO INSTALL NEW 6" TYPE 'D' CURB PER DETAIL ON SHEET C2.1.
6. CONTRACTOR TO INSTALL NEW CONCRETE MIAMI CURB PER DETAIL ON SHEET C2.1.
7. CONTRACTOR TO INSTALL NEW 6' HIGH OPAQUE VINYL FENCE.
8. CONTRACTOR TO INSTALL NEW MES PER DETAIL ON SHEET C2.3.
9. CONTRACTOR TO INSTALL NEW CURB INLET PER DETAIL ON SHEET C2.3.
10. CONTRACTOR TO INSTALL NEW STORMWATER MANHOLE PER DETAIL ON SHEET C2.3
11. CONTRACTOR TO INSTALL NEW FIRE HYDRANT PER DETAIL ON SHEET C4.2.
12. CONTRACTOR TO INSTALL NEW RIGHT TURN LANE PER DETAIL ON SHEET C2.3.
13. CONTRACTOR TO INSTALL 12" ADS PEDESTRIAN GRADE YARD DRAINS.
14. PAINTED REFLECTIVE YELLOW NOSE PER FDOT SPECIFICATIONS.
15. NEW 6" YELLOW THERMOPLASTIC PAINTED STRIPE.
16. NEW WHITE THERMOPLASTIC PAINTED CROSSWALK.
17. ENTRY SIGNS TO BE PERMITTED SEPARATELY.
18. CONTRACTOR TO INSTALL NEW PUMP STATION PER DETAIL ON SHEET C4.3.
19. CONTRACTOR TO INSTALL BRICK PAVERS, VERIFY STYLE WITH OWNER.
20. CONTRACTOR TO INSTALL STORM TECH SC-310 CHAMBER (CRITTER CROSSING).
21. CONTRACTOR TO INSTALL CRUSHED CONCRETE SURFACE FOR EMERGENCY ACCESS ROAD.
22. CONTRACTOR TO PROVIDE YARD DRAIN W/ 12" NYLOPLAST DOME GRATE OR APPROVED EQUAL.

NORTH

PRELIMINARY PLAN
SCALE: 1"= 60'

60 30 0 60 120

THIS DRAWING AND THE DESIGN SHOWN ARE THE PROPERTY OF SPRING ENGINEERING, INC. AND ARE NOT TO BE REPRODUCED, COPIED, PUBLISHED, OR USED IN WHOLE OR PART WITHOUT WRITTEN CONSENT. THEY ARE TO BE USED ONLY FOR THE SITE AND PROJECT IDENTIFIED AND SHALL BE RETURNED UPON REQUEST.

100%
CONSTRUCTION DOCS.
ISSUE DATE: 02.10.16

REV	DATE	DESCRIPTION

REVISIONS

YANCEY B. ABUTON
P.E. NO. 63766
DATE

PRISTINE LAKE PRESERVE

Ehren Cutoff and Parkway Blvd
Pasco County, Florida

CONTRACT DATE:
August 20, 2015

SPRING ENGINEERING, INC.
ENGINEERING • LAND PLANNING • ARCHITECTURE
3014 U.S. HWY 19, HOLIDAY, FL (727) 938-1516
FL COA NO. 00005158 & LICENSE NO. AA-C001747

SITE PLAN

DESIGNED BY: JAY
DRAWN BY: JAY
CHECKED BY: RPD
JOB NO.
2015-11
SHEET NO.
C2.1

SECTION 01, TOWNSHIP 26 SOUTH, RANGE 18 EAST
SECTION 06, TOWNSHIP 26 SOUTH, RANGE 19 EAST
PASCO COUNTY, FLORIDA

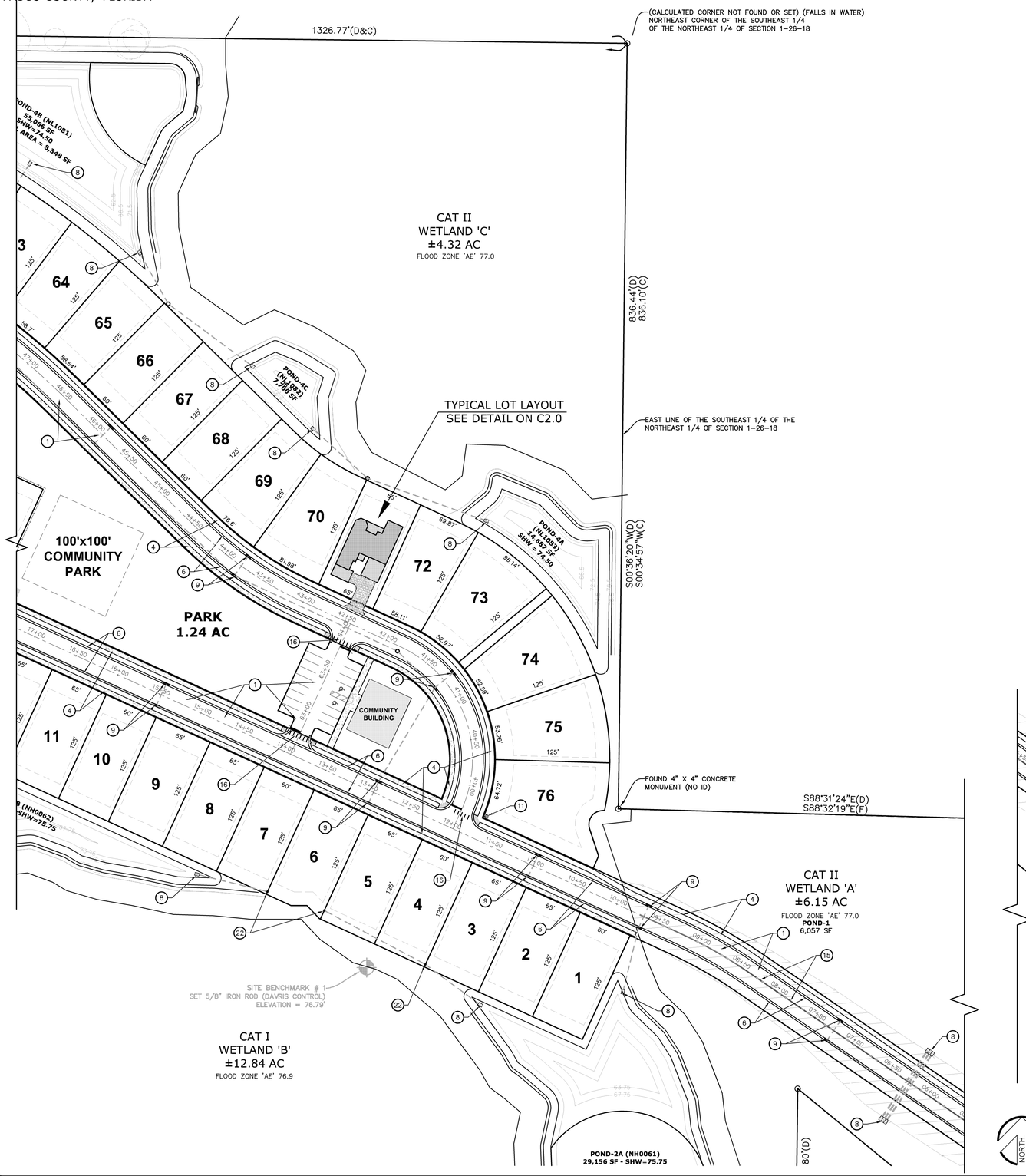

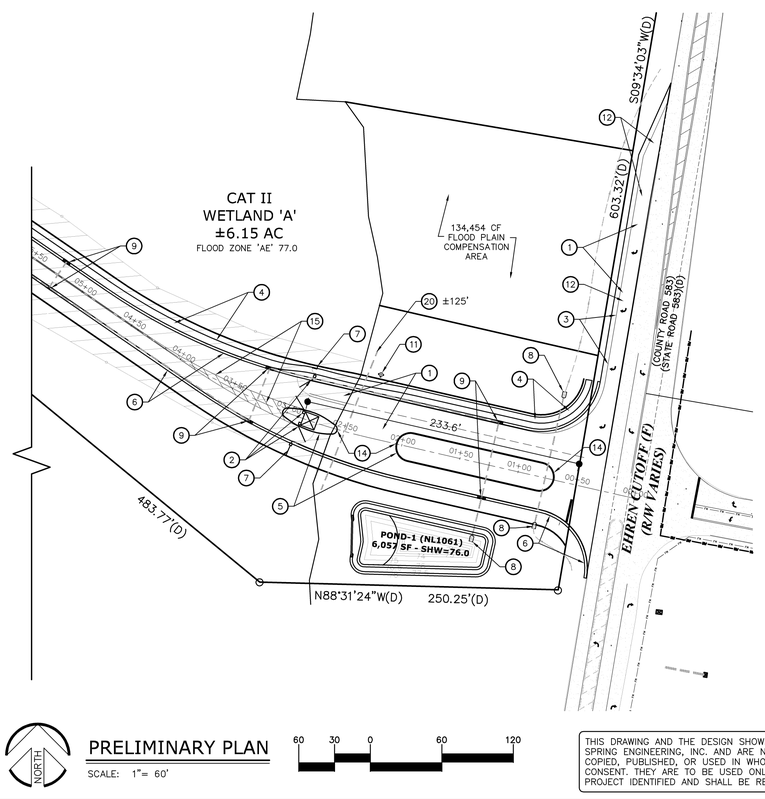

SITE KEY NOTES

1. CONTRACTOR TO INSTALL NEW ASPHALT PAVEMENT PER DETAIL ON SHEET C2.1.
2. CONTRACTOR TO INSTALL NEW ELECTRIC SWING GATE.
3. NEW 6" WHITE THERMOPLASTIC PAINTED STRIPE.
4. CONTRACTOR TO INSTALL NEW 4" THICK CONCRETE SIDE WALK PER DETAIL ON SHEET C2.1.
5. CONTRACTOR TO INSTALL NEW 6" TYPE 'D' CURB PER DETAIL ON SHEET C2.1.
6. CONTRACTOR TO INSTALL NEW CONCRETE MIAMI CURB PER DETAIL ON SHEET C2.1.
7. CONTRACTOR TO INSTALL NEW 6' HIGH OPAQUE VINYL FENCE.
8. CONTRACTOR TO INSTALL NEW MES PER DETAIL ON SHEET C2.3.
9. CONTRACTOR TO INSTALL NEW CURB INLET PER DETAIL ON SHEET C2.3.
10. CONTRACTOR TO INSTALL NEW STORMWATER MANHOLE PER DETAIL ON SHEET C2.3
11. CONTRACTOR TO INSTALL NEW FIRE HYDRANT PER DETAIL ON SHEET C4.2.
12. CONTRACTOR TO INSTALL NEW RIGHT TURN LANE PER DETAIL ON SHEET C2.3.
13. CONTRACTOR TO INSTALL 12" ADS PEDESTRIAN GRADE YARD DRAINS.
14. PAINTED REFLECTIVE YELLOW NOSE PER FDOT SPECIFICATIONS.
15. NEW 6" YELLOW THERMOPLASTIC PAINTED STRIPE.
16. NEW WHITE THERMOPLASTIC PAINTED CROSSWALK.
17. ENTRY SIGNS TO BE PERMITTED SEPARATLEY.
18. CONTRACTOR TO INSTALL NEW PUMP STATION PER DETAIL ON SHEET C4.3.
19. CONTRACTOR TO INSTALL BRICK PAVERS, VERIFY STYLE WITH OWNER.
20. CONTRACTOR TO INSTALL STORMTECH SC-310 CHAMBER (CRITTER CROSSING).
21. CONTRACTOR TO INSTALL CRUSHED CONCRETE SURFACE FOR EMERGENCY ACCESS ROAD.
22. CONTRACTOR TO PROVIDE YARD DRAIN W/ 12" NYLOPLAST DOME GRATE OR APPROVED EQUAL.

NORTH

PRELIMINARY PLAN
SCALE: 1"= 60'

60 30 0 60 120

THIS DRAWING AND THE DESIGN SHOWN ARE THE PROPERTY OF SPRING ENGINEERING, INC. AND ARE NOT TO BE REPRODUCED, COPIED, PUBLISHED, OR USED IN WHOLE OR PART WITHOUT WRITTEN CONSENT. THEY ARE TO BE USED ONLY FOR THE SITE AND PROJECT IDENTIFIED AND SHALL BE RETURNED UPON REQUEST.

100%
CONSTRUCTION DOCS.
ISSUE DATE: 02.10.16

REVISIONS

REV	DATE	DESCRIPTION

YANCEY B. ABUTON
P.E. NO. 63766
DATE

PRISTINE LAKE PRESERVE

Ehren Cutoff and Parkway Blvd
Pasco County, Florida

CONTRACT DATE:
August 20, 2015

SPRING ENGINEERING, INC.
ENGINEERING • LAND PLANNING • ARCHITECTURE
3014 U.S. HWY 19, HOLIDAY, FL (727) 938-1516
FL COA NO. 00005158 & LICENSE NO. AA-C001747

SITE PLAN

DESIGNED BY: JAY
DRAWN BY: JAY
CHECKED BY: RPD
JOB NO.
2015-11

SHEET NO.
C2.2

RIGHT TURN LANE DETAIL

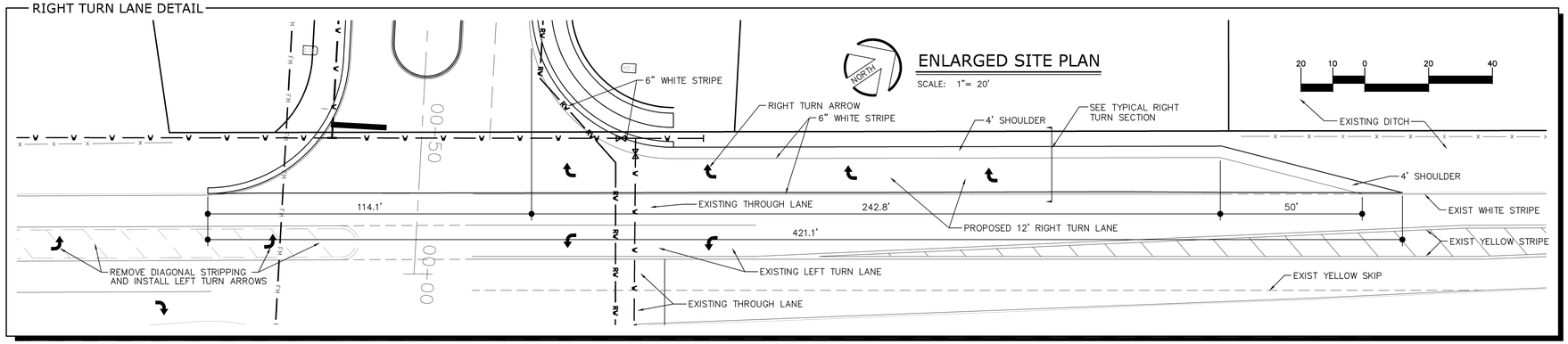

RIGHT TURN SECTION
F.D.O.T. INDEX No. 301

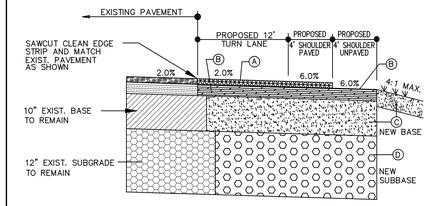

Ⓐ CONTRACTOR TO INSTALL 1½" OF F.C-6 W/ GROUND TIRE RUBBER OR ¾" F.C-5 W/ GROUND TIRE RUBBER (MATCH EXISTING).

Ⓑ CONTRACTOR TO INSTALL 3 1/2" OF TRAFFIC LEVEL C SUPER PAVE ASPHALT.

Ⓒ CONTRACTOR TO INSTALL 10" OF CRUSHED CONCRETE PLACED IN TWO LIFTS AND COMPACTED TO 98% OF MAX. DENSITY.

Ⓓ 12" OF STABILIZED SUBBASE W/ MIN. L.B.R. 40 AND COMPACTED TO 98% MAX. DENSITY.

CURB INLET DETAIL
3099CGRDF & 3099CGRFH

APPROX. GRATE DRAIN AREA = 232.87 SQ IN
*APPROX. WEIGHT WITH FRAME & HOOD = 344.00 LBS

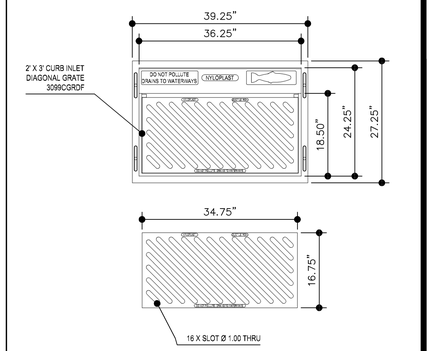

DIMENSIONS ARE FOR REFERENCE ONLY
ACTUAL DIMENSIONS MAY VARY
DIMENSIONS ARE IN INCHES
GRATE MEETS H-20 LOAD RATING
QUALITY: MATERIALS SHALL CONFORM TO ASTM A536 GRADE 70-50-05
PAINT: CASTINGS ARE FURNISHED WITH A BLACK PAINT
LOCKING DEVICE AVAILABLE UPON REQUEST SEE DRAWING NO. 7002-110-057
SLOPE OF GRATE SURFACE IS 5.2%
CURB INLET FRAME INSIDE VOLUME IS APPROX 2.73 CU FT
APPROX. DRAIN AREA OF GRATE & HOOD
LOWEST SETTING = 369.54 SQ IN
LOWEST + 1" SETTING = 402.41 SQ IN
LOWEST + 2" SETTING = 435.29 SQ IN
LOWEST + 3" SETTING = 468.16 SQ IN
HIGHEST SETTING = 501.04 SQ IN

*WEIGHT DOES NOT INCLUDE DUCTILE IRON BASE PLATE
18BASER: APPROX. 133.50 LBS
24BASER: APPROX. 122.00 LBS
30BASER: APPROX. 92.50 LBS

SIDEWALK DETAIL

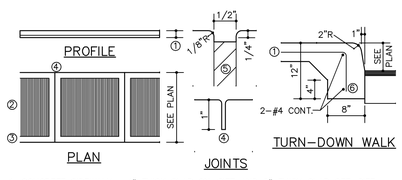

1. CONCRETE SIDEWALK: 4" THICK SLAB ON-SITE AND 6" THICK SLAB OFF-SITE WITH 6x6 #10/10 W.W.M. PLACED 2" ABOVE THE BOTTOM OF THE SLAB.
2. ROUGH BROOM FINISH.
3. 5" WIDE SMOOTH TROWEL FINISH ALONG SIDEWALK EDGE AND JOINTS.
4. CONTRACTION JOINT: 1/8" WIDE x 1" DEEP, SPACED 5' O.C.
5. CONSTRUCTION JOINT: USE PRE-MOLDED FILLER AT BUILDING AND UTILITIES.
6. TURN-DOWN WALK: TERMINATE SIDEWALK ALONG ASPHALT PAVING WITH A THICKENED FOOTING AS SHOWN.

MITERED END SECTION

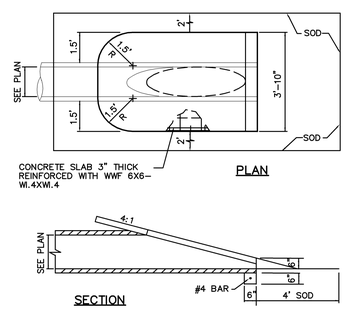

NOT USED

PAVEMENT DETAIL

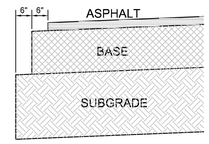

Ⓐ HOT MIX ASPHALT SURFACE COURSE COMPACTED TO MINIMUM 96% OF MARSHALL MAXIMUM LAB UNIT WEIGHT

Ⓑ BASE COURSE COMPACTED TO MINIMUM 98% MAXIMUM MODIFIED PROCTOR DRY DENSITY (ASTM D-1557) & MINIMUM LBR-100

Ⓒ SUBGRADE COMPACTED TO MINIMUM 95% MAXIMUM MODIFIED PROCTOR DRY DENSITY (ASTM D-1557) & MIN. LBR-40

Paving Section Design

Item	Material Description	Minimum Thickness	Design Thickness	Structural Coefficient per Inch	Structural Number On-Site	Structural Number Road Right-of-Way
Ⓐ	SP-9.5 Fine Mix	1"		0.44		
	SP-12.5 Fine Mix	1.5"	1.5"	0.44	0.66	0.66
	SP-19.0 Fine Mix	2"		0.44		
Ⓑ	Limerock	6"		0.18		
	Crushed Concrete	6"	6" / 8"	0.18	1.08	1.44
	Bank Run Shell	6"		0.18		
	Soil Cement (300 psi)	6"		0.15		
Ⓒ	Subgrade - Existing on-site soil stabilized as necessary to achieve min. LBR-40	9"	9" / 12"	0.08	0.72	0.96
Total SN Provided					2.46	3.06
Minimum SN Required					2.36	2.96

TYPICAL MEDIAN DETAIL

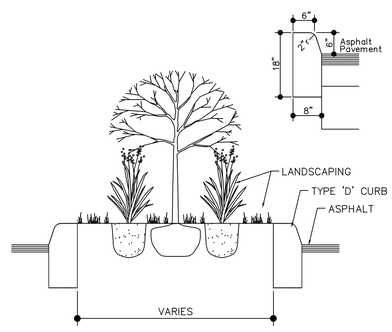

MANHOLE DETAIL

NOTE:
PRECAST CONCRETE SHALL ATTAIN A MINIMUM COMPRESSIVE STRENGTH OF 4,000 p.s.i. AT 28 DAYS.

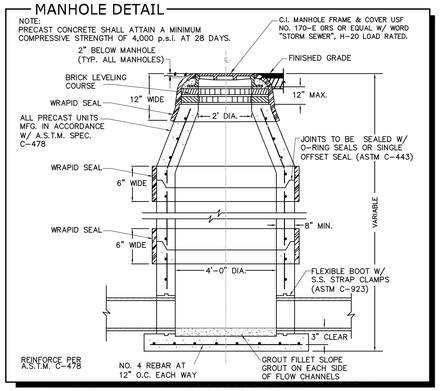

PASCO COUNTY NOTES

A.) THE SOIL EROSION AND SEDIMENT CONTROL DEVISES SHALL BE INSTALLED PRIOR TO CONSTRUCTION, MAINTAINED THROUGHOUT CONSTRUCTION AND UNTIL THE SITE IS PERMANENTLY STABILIZED.

B.) DURING CONSTRUCTION IF SOMETHING IS UNCOVERED, PARTICULARLY OF AN ARCHEOLOGICAL NATURE, THAT ALL WORK SHALL STOP AND THAT THE STATE ARCHEOLOGICAL OFFICE AND COUNTY ARE NOTIFIED.

C.) PRIOR TO CONSTRUCTION, A BUILDING PERMIT SHALL BE OBTAINED FOR ALL STRUCTURES THAT HAVE A FOOTER, REGARDLESS OF SIZE, THROUGH PASCO COUNTY CENTRAL PERMITTING. (IE: INCLUDING BUT NOT INCLUSIVE BUILDINGS, ACCESSORIES, AND RETAINING WALLS).

D.) IT IS THE OWNER'S RESPONSIBILITY (OR "RESPONSIBLE ENTITY") IS TO INSPECT AND MAINTAIN THE WATER RETENTION SYSTEM ON A REGULAR BASIS.

E.) ALL SODDED SLOPES OVER 4 TO 1, SHALL BE INSTALLED WITH SOD PEGS.

F.) ALL DEMOLITION DEBRIS SHALL BE REMOVED FROM THE SITE AND LEGALLY DISPOSED OF.

G.) IF DURING CONSTRUCTION ACTIVITIES ANY EVIDENCE OF HISTORIC RESOURCES, INCLUDING BUT NOT LIMITED TO ABORIGINAL OR HISTORIC POTTERY, PREHISTORIC STONE TOOLS, BONE OR SHELL TOOLS, HISTORIC TRASH PITS, OR HISTORIC BUILDING FOUNDATION, ARE DISCOVERED, WORK SHALL COME TO AN IMMEDIATE STOP AND THE FLORIDA DEPARTMENT OF HISTORIC RESOURCES (STATE HISTORIC PRESERVATION OFFICER) AND PASCO COUNTY SHALL BE NOTIFIED WITHIN TWO WORKING DAYS OF THE RESOURCES FOUND ON THE SITE.

H.) THERE WILL BE NO ONSITE BURNING PROPOSED ON THIS PROJECT.

I.) FILL REQUIRED ESTIMATED TO BE ± 500 C.Y.; NOT TO BE USED FOR BID PURPOSES.

CURB DETAIL

ALL CURBS: SAW CUT CONTROL JOINTS EVERY 10 FEET.

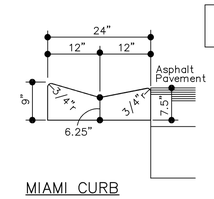

MIAMI CURB

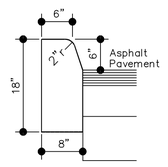

STANDARD TYPE D

CONTROL STRUCTURE DETAIL

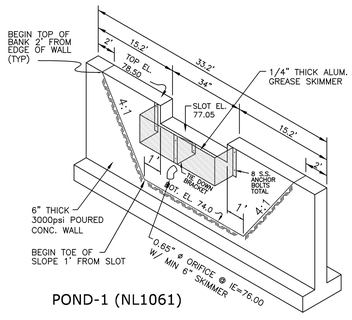

POND-1 (NL1061)

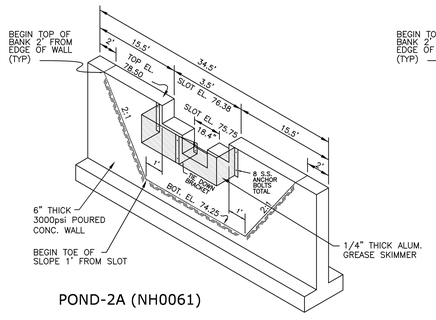

POND-2A (NH0061)

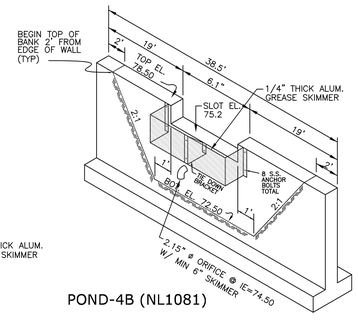

POND-4B (NL1081)

TYPE 2 ROADWAY

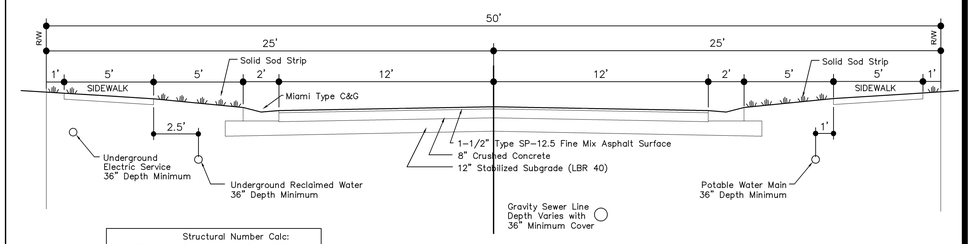

Structural Number Calc:
12" Stabilized Subgrade @ .08 = 0.96
8" CRUSHED CONC. @ 0.18 = 1.44
1-1/2" Type SP Asphalt @ .44 = .66
3.06 >2.96

MAX DESIGN SPEED = 35 MPH

THIS DRAWING AND THE DESIGN SHOWN ARE THE PROPERTY OF SPRING ENGINEERING, INC. AND ARE NOT TO BE REPRODUCED, COPIED, PUBLISHED, OR USED IN WHOLE OR PART WITHOUT WRITTEN CONSENT. THEY ARE TO BE USED ONLY FOR THE SITE AND PROJECT IDENTIFIED AND SHALL BE RETURNED UPON REQUEST.

100%
CONSTRUCTION DOCS.
ISSUE DATE: 02.10.16

REVISIONS

REV	DATE	DESCRIPTION

YANCEY B. ABUTON
P.E. NO. 63766
DATE

PRISTINE LAKE PRESERVE

Ehren Cutoff and Parkway Blvd
Pasco County, Florida

CONTRACT DATE:
August 20, 2015

SPRING ENGINEERING, INC.
ENGINEERING • LAND PLANNING • ARCHITECTURE
3014 U.S. HWY 19, HOLIDAY, FL (727) 938-1516
FL COA NO. 00005158 & LICENSE NO. AA-C001747

DETAILS AND SECTIONS

DESIGNED BY: JAY
DRAWN BY: JAY
CHECKED BY: RPD
JOB NO.
2015-11
SHEET NO.
C2.3

POND-1 SECTION — POND-2A SECTION — POND-2B SECTION

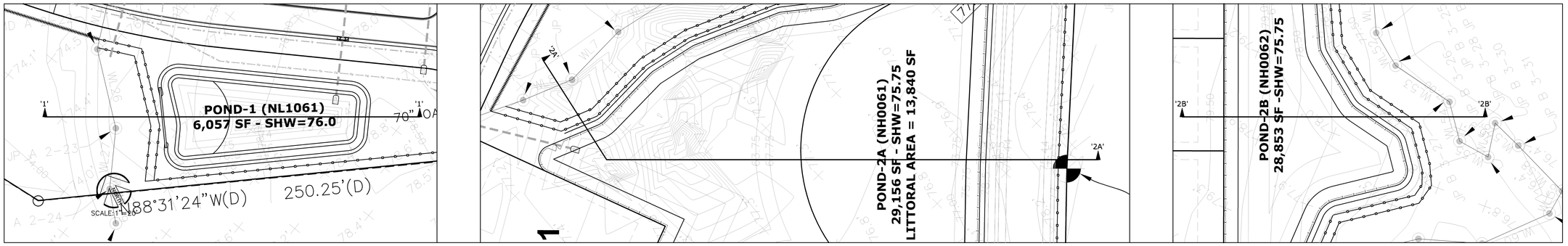

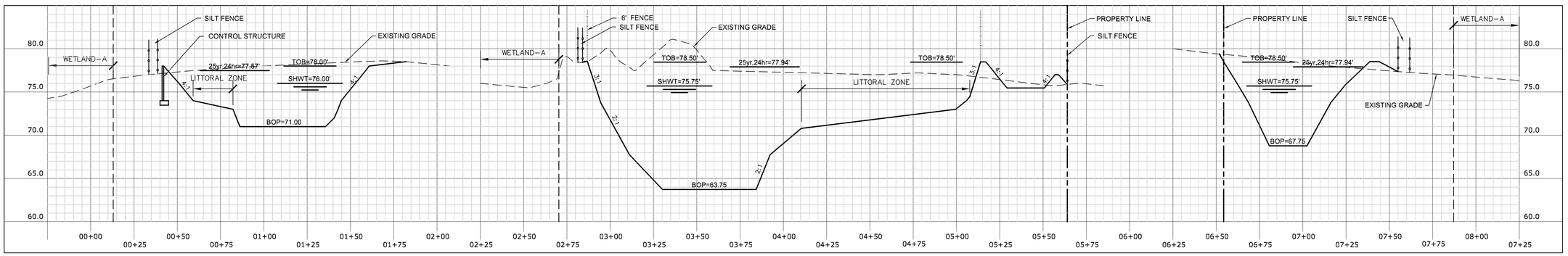

POND-4B SECTION — POND-4C SECTION — POND-4A SECTION

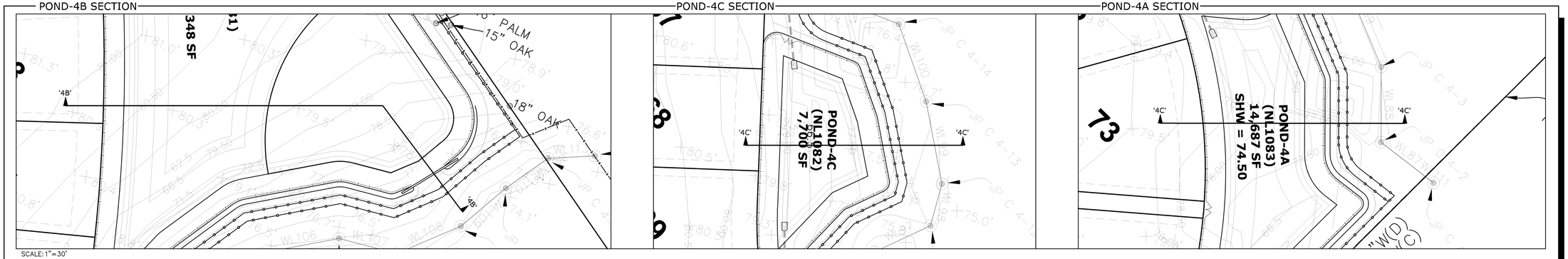

SCALE: 1"=30'

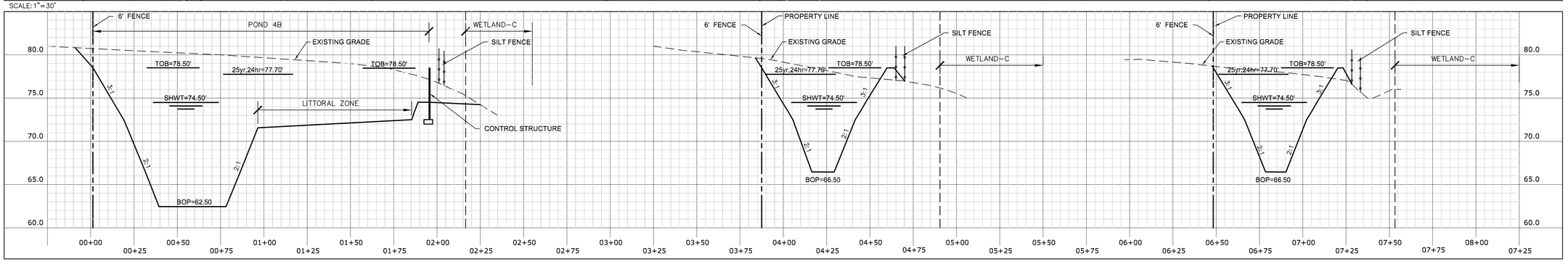

THIS DRAWING AND THE DESIGN SHOWN ARE THE PROPERTY OF SPRING ENGINEERING, INC. AND ARE NOT TO BE REPRODUCED, COPIED, PUBLISHED, OR USED IN WHOLE OR PART WITHOUT WRITTEN CONSENT. THEY ARE TO BE USED ONLY FOR THE SITE AND PROJECT IDENTIFIED AND SHALL BE RETURNED UPON REQUEST.

100%
CONSTRUCTION DOCS.
ISSUE DATE: 02.10.16

REVISIONS

REV	DATE	DESCRIPTION

YANCEY B. ABUTON
P.E. NO. 63766
DATE

PRISTINE LAKE PRESERVE

Ehren Cutoff and Parkway Blvd
Pasco County, Florida

CONTRACT DATE:
August 20, 2015

SPRING ENGINEERING, INC.
ENGINEERING • LAND PLANNING • ARCHITECTURE
3014 U.S. HWY 19, HOLIDAY, FL (727) 938-1516
FL COA NO. 00005158 & LICENSE NO. AR-C001747

POND SECTIONS

DESIGNED BY: JAY
DRAWN BY: JAY
CHECKED BY: RPD
JOB NO.
2015-11
SHEET NO.
C2.4

SECTION 01, TOWNSHIP 26 SOUTH, RANGE 18 EAST
SECTION 06, TOWNSHIP 26 SOUTH, RANGE 19 EAST
PASCO COUNTY, FLORIDA

TYPICAL LOT 'A' GRADING

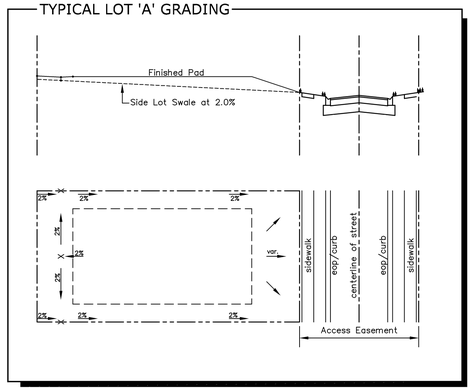

TYPICAL LOT 'B' GRADING

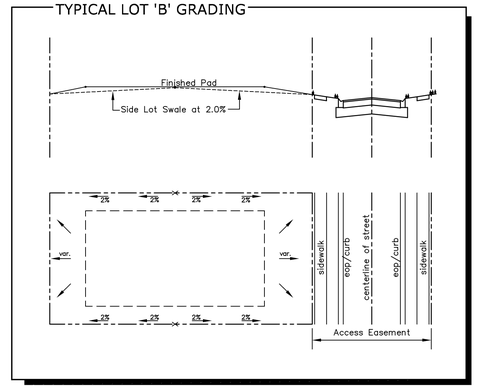

TYPICAL LOT 'C' GRADING

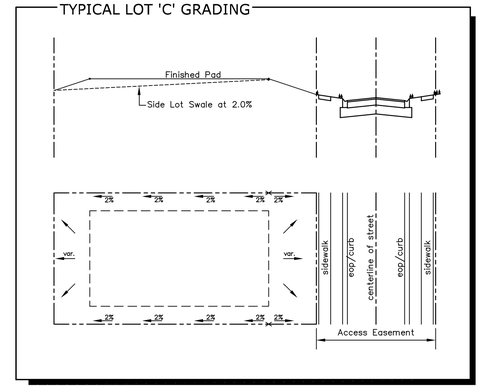

LEGEND

DIRECTION OF FLOW	
PROPOSED ELEVATION	× 55.00
EXISTING ELEVATION	+ 104.63
MITERED END SECTION (SEE DETAIL SHEET C2.1)	
ADS N-12 STORM PIPE	
CURB INLET (SEE DETAIL SHEET C2.1)	

GRADING NOTES

CONTRACTOR SHALL INSURE THAT THE CONSTRUCTION OF ALL HANDICAPPED PARKING SPACES, ACCESS AISLES, LOADING ZONES AND RAMPS COMPLY WITH THE ADA AND CABO/ANSI STANDARDS. SLOPES OF HANDICAPPED PARKING AND LOADING AREAS SHALL NOT EXCEED 2%. CONTRACTOR SHALL NOTIFY THE PROJECT ENGINEER (IN WRITING) OF ANY PROBLEM AREAS PRIOR TO CONSTRUCTION OR ASSUME RESPONSIBILITY FOR ALL NECESSARY RELATED CORRECTIONS.

ALL ORGANIC MATERIAL SHALL BE REMOVED FROM BENEATH THE FOOTINGS, SLABS AND PAVEMENT AND REPLACED WITH COMPACTED INORGANIC GRANULAR BACKFILL. EXCAVATION OF UNSUITABLE MATERIALS SHOULD EXTEND A MINIMUM DISTANCE OF 5' BEYOND THE FOOTPRINT OF THE BUILDING OR EDGE OF PAVEMENT.

FOR ADDITIONAL INFORMATION ON THE REQUIRED SITE PREPARATION REFER TO THE REPORT OF GEOTECHNICAL SUBSURFACE EXPLORATION.

GENERAL NOTES

SEE DRAWING "C7" FOR GENERAL NOTES

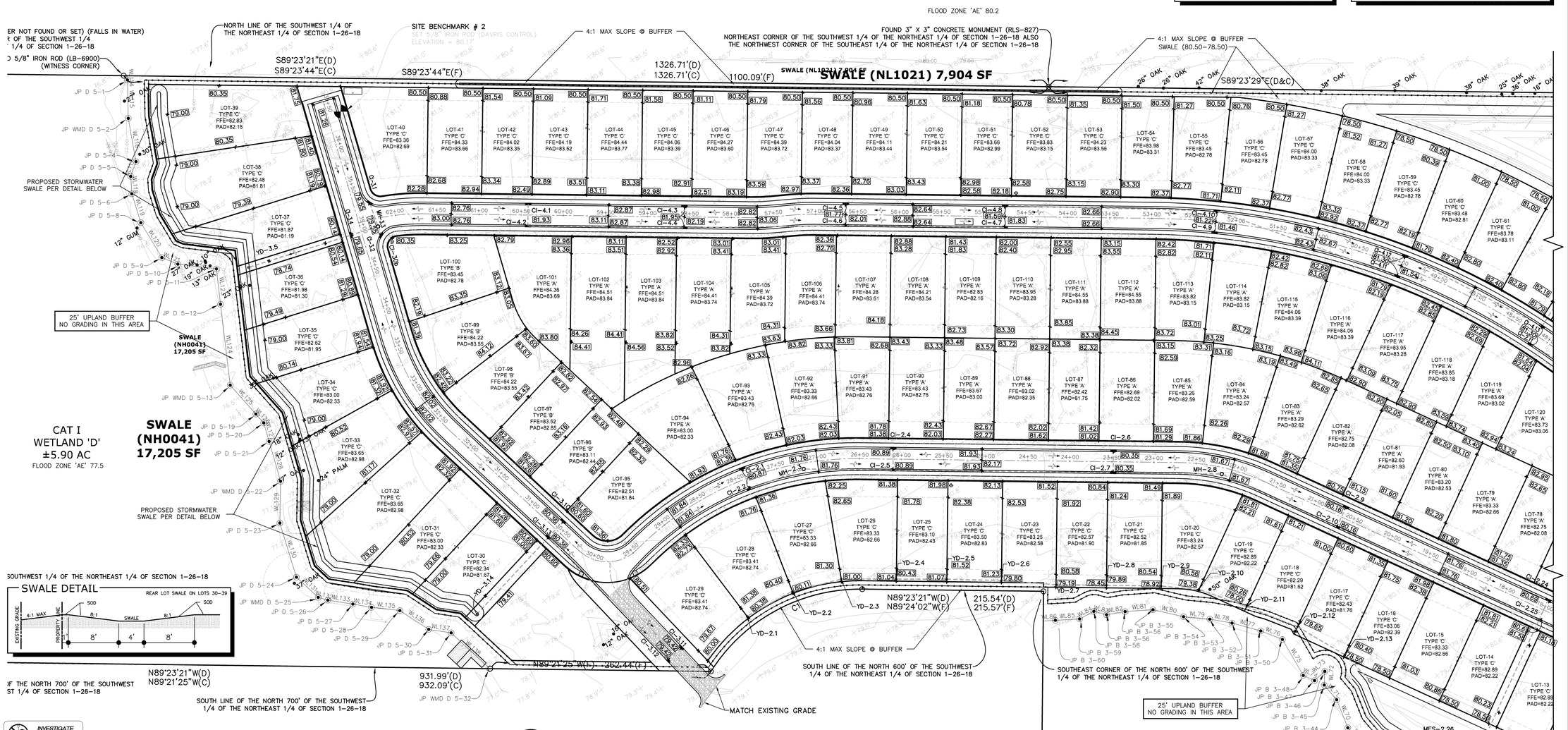

INVESTIGATE BEFORE YOU EXCAVATE
"CALL SUNSHINE STATE ONE"
1-800-432-4770
(TOLL FREE)
FL STATUTE 553.851 (1979) REQUIRES MIN. OF 2 DAYS AND MAX. OF 5 DAYS NOTICE BEFORE YOU EXCAVATE.

NORTH

PAVING, GRADING & DRAINAGE PLAN

SCALE: 1"= 60'

60 30 0 60 120

THIS DRAWING AND THE DESIGN SHOWN ARE THE PROPERTY OF SPRING ENGINEERING, INC. AND ARE NOT TO BE REPRODUCED, COPIED, PUBLISHED, OR USED IN WHOLE OR PART WITHOUT WRITTEN CONSENT. THEY ARE TO BE USED ONLY FOR THE SITE AND PROJECT IDENTIFIED AND SHALL BE RETURNED UPON REQUEST.

100%
CONSTRUCTION DOCS.
ISSUE DATE: 02.10.16

REVISIONS

REV	DATE	DESCRIPTION

YANCEY B. ABUTON
P.E. NO. 63766
DATE

PRISTINE LAKE PRESERVE

Ehren Cutoff and Parkway Blvd
Pasco County, Florida

CONTRACT DATE:
August 20, 2015

SPRING ENGINEERING, INC.
ENGINEERING • LAND PLANNING • ARCHITECTURE
3014 U.S. HWY 19, HOLIDAY, FL (727) 938-1516
FL COA NO. 00005158 & LICENSE NO. AA-C001747

PAVING, GRADING AND DRAINAGE PLAN

DESIGNED BY: JAY
DRAWN BY: JAY
CHECKED BY: RPD
JOB NO.
2015-11

SHEET NO.
C3.0

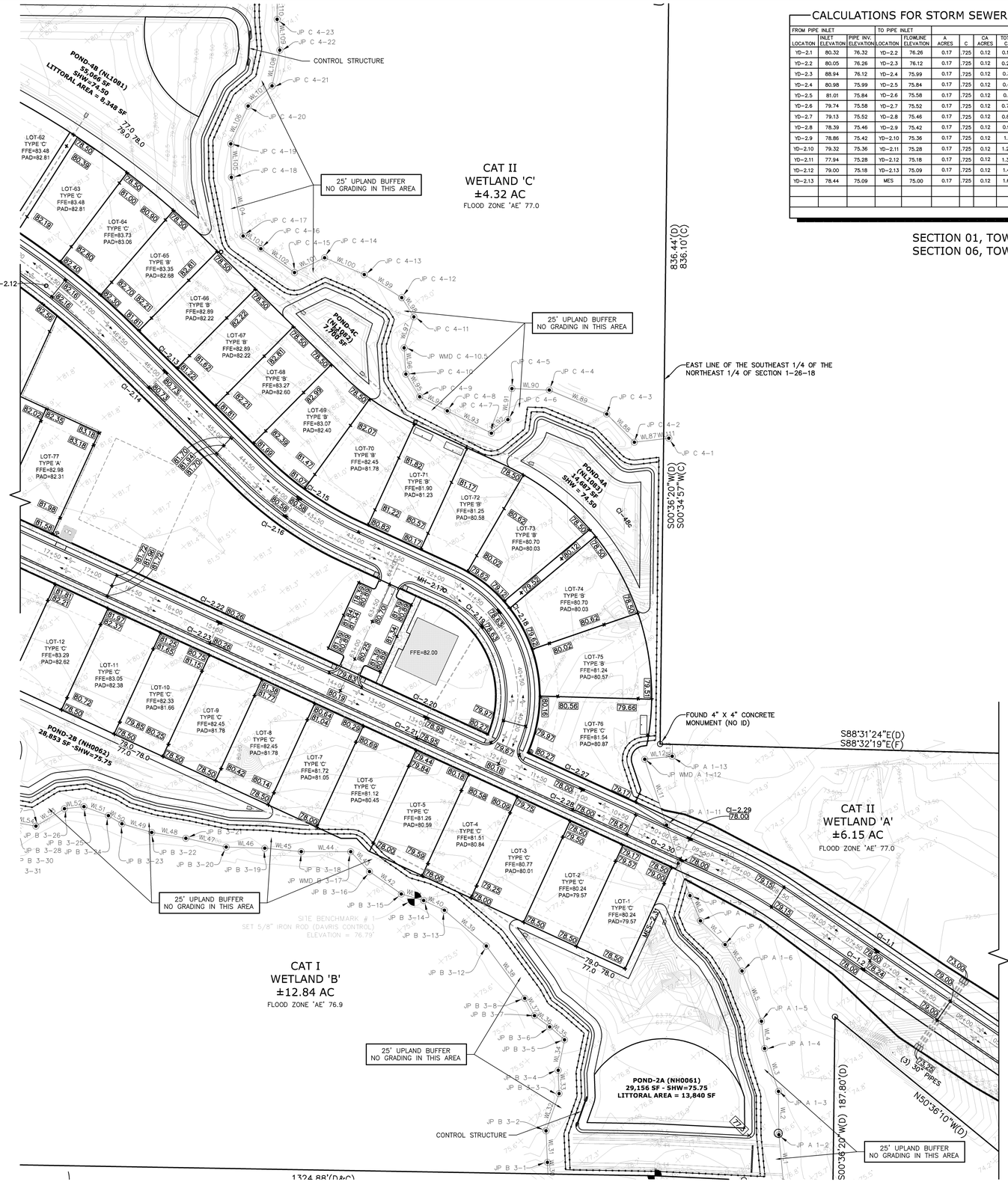

CALCULATIONS FOR STORM SEWER DESIGN

FROM PIPE INLET LOCATION	INLET ELEVATION	PIPE INV. ELEVATION	TO PIPE INLET LOCATION	FLOWLINE ELEVATION	A ACRES	C	CA ACRES	TOTAL CA	Tc MINS.	I in/hr	Qd CFS	PIPE SIZE n = 0.013	Q full CFS	% SLOPE	LENGTH	VELOCITY FT./S.
YD-2.1	80.32	76.32	YD-2.2	76.26	0.17	.725	0.12	0.12	15.00	6.38	0.77	12"ø	1.13	0.10	61'	1.44
YD-2.2	80.05	76.26	YD-2.3	76.12	0.17	.725	0.12	0.24	15.71	6.26	1.52	12"ø	1.75	0.24	60'	2.23
YD-2.3	88.94	76.12	YD-2.4	75.99	0.17	.725	0.12	0.37	16.16	6.19	2.27	15"ø	2.90	0.20	65'	2.36
YD-2.4	80.98	75.99	YD-2.5	75.84	0.17	.725	0.12	0.49	16.61	6.12	3.00	15"ø	3.24	0.25	60'	2.64
YD-2.5	81.01	75.84	YD-2.6	75.58	0.17	.725	0.12	0.61	16.99	6.06	3.72	15"ø	4.10	0.40	65'	3.34
YD-2.6	79.74	75.58	YD-2.7	75.52	0.17	.725	0.12	0.74	17.32	6.01	4.43	24"ø	7.17	0.10	65'	2.28
YD-2.7	79.13	75.52	YD-2.8	75.46	0.17	.725	0.12	0.86	17.79	5.94	5.11	24"ø	7.17	0.10	65'	2.28
YD-2.8	78.39	75.46	YD-2.9	75.42	0.17	.725	0.12	0.98	18.27	5.88	5.78	24"ø	7.17	0.10	45'	2.28
YD-2.9	78.86	75.42	YD-2.10	75.36	0.17	.725	0.12	1.11	18.60	5.83	6.45	24"ø	7.17	0.10	60'	2.28
YD-2.10	79.32	75.36	YD-2.11	75.28	0.17	.725	0.12	1.23	19.03	5.78	7.10	24"ø	7.86	0.12	65'	2.50
YD-2.11	77.94	75.28	YD-2.12	75.18	0.17	.725	0.12	1.35	19.47	5.72	7.73	24"ø	8.79	0.15	65'	2.80
YD-2.12	79.00	75.18	YD-2.13	75.09	0.17	.725	0.12	1.48	19.85	5.67	8.37	24"ø	8.79	0.15	60'	2.80
YD-2.13	78.44	75.09	MES	75.00	0.17	.725	0.12	1.60	20.21	5.63	9.00	24"ø	10.14	0.20	45'	3.23

SECTION 01, TOWNSHIP 26 SOUTH, RANGE 18 EAST
SECTION 06, TOWNSHIP 26 SOUTH, RANGE 19 EAST
PASCO COUNTY, FLORIDA

CALCULATIONS FOR STORM SEWER DESIGN

FROM PIPE INLET LOCATION	INLET ELEVATION	PIPE INV. ELEVATION	TO PIPE INLET LOCATION	FLOWLINE ELEVATION	A ACRES	C	CA ACRES	TOTAL CA	Tc MINS.	I in/hr	Qd CFS	PIPE SIZE n = 0.013	Q full CFS	% SLOPE	LENGTH	VELOCITY FT./S.
CI-1.1	78.00	72.50	CI-1.2	72.44	0.10	0.9	0.09	0.09	15.00	6.38	0.56	15"ø	3.17	0.24	25'	2.59
CI-1.2	78.00	72.44	CI-1.4	71.93	0.10	0.9	0.09	0.18	15.16	6.36	1.11	15"ø	3.20	0.24	209'	2.61
CI-1.3	78.00	71.99	CI-1.4	71.93	0.08	0.9	0.072	0.072	15.00	6.38	0.45	15"ø	3.17	0.24	25'	2.59
CI-1.4	78.00	71.93	CI-1.6	71.45	0.08	0.9	0.072	0.324	16.50	6.14	1.93	15"ø	3.17	0.24	200'	2.59
CI-1.5	78.00	71.45	CI-1.6	71.34	0.13	0.9	0.117	0.441	17.79	9.95	2.55	15"ø	3.17	0.24	46'	2.58
CI-1.6	78.00	71.34	CI-1.7	70.85	0.13	0.9	0.117	0.558	18.08	9.90	3.20	15"ø	3.23	0.25	197'	2.63
CI-1.7	78.00	70.85	CI-1.8	70.70	0.15	0.9	0.135	0.693	19.33	5.74	3.86	18"ø	5.06	0.23	65'	2.86
CI-1.8	78.00	70.70	MES-1.9	70.61	0.15	0.9	0.135	0.828	19.71	5.69	4.58	18"ø	5.19	0.24	37'	2.94
CI-2.1	80.87	76.62	CI-2.2	76.55	1.20	.725	0.87	0.87	15.00	6.38	5.55	18"ø	5.57	0.28	25'	3.15
CI-2.2	80.87	76.55	MH-2.3	76.29	0.18	.725	0.13	1.00	15.13	6.36	6.36	18"ø	6.49	0.38	68'	3.67
MH-2.3	81.71	76.29	CI-2.5	75.89	–	.725	–	1.00	15.44	6.31	6.31	18"ø	6.49	0.38	106'	3.67
CI-2.4	80.89	75.95	CI-2.5	75.89	0.65	.725	0.47	0.47	15.92	6.23	2.94	15"ø	3.17	0.24	25'	2.59
CI-2.5	80.89	75.89	CI-2.7	75.26	0.19	.725	0.14	1.61	16.08	6.20	9.98	24"ø	11.11	0.24	261'	3.54
CI-2.6	80.35	75.32	CI-2.7	75.26	1.04	.725	0.75	0.75	17.31	6.01	4.53	18"ø	5.16	0.24	25'	2.92
CI-2.7	80.35	75.26	MH-2.8	75.07	0.30	.725	0.22	2.58	17.46	5.99	15.47	30"ø	15.93	0.15	129'	3.24
MH-2.8	81.69	75.07	CI-2.10	74.85	–	.725	–	2.58	18.12	5.90	15.23	30"ø	15.93	0.15	150'	3.24
CI-2.9	80.16	74.91	CI-2.10	74.85	1.07	.725	0.78	0.78	16.89	5.79	4.5	18"ø	5.16	0.24	25'	2.92
CI-2.10	80.16	74.85	CI-2.25	74.16	0.29	.725	0.21	3.57	19.03	5.78	20.60	30"ø	20.97	0.26	267'	4.27
CI-2.11	81.30	77.05	MH-2.12	76.89	0.47	.725	0.34	0.34	20.07	5.64	1.92	15"ø	3.17	0.24	65'	2.59
MH-2.12	82.16	76.89	CI-2.14	76.50	–	.725	–	0.34	20.49	5.59	1.91	15"ø	3.17	0.24	162'	2.59
CI-2.13	80.37	76.56	CI-2.14	76.50	0.51	.725	0.37	0.37	21.54	5.47	2.02	15"ø	3.17	0.24	25'	2.59
CI-2.14	80.37	76.50	CI-2.16	75.70	0.61	.725	0.44	1.15	21.70	5.45	6.28	18"ø	6.49	0.38	210'	3.67
CI-2.15	80.58	75.76	CI-2.16	75.70	0.33	.725	0.24	0.24	22.65	5.35	1.28	15"ø	3.17	0.24	25'	2.59
CI-2.16	80.58	75.70	MH-2.17	75.35	0.26	.725	0.19	1.58	22.81	5.33	8.42	24"ø	9.62	0.18	197'	3.06
MH-2.17	79.37	75.35	CI-2.19	75.25	–	.725	–	1.58	23.88	5.22	8.25	24"ø	9.62	0.18	57'	3.06
CI-2.18	78.63	76.10	CI-2.19	76.00	1.04	.725	0.75	0.75	24.19	5.19	3.91	15"ø	4.10	0.40	25'	3.34
CI-2.19	78.63	75.25	CI-2.20	75.11	0.50	.725	0.36	2.69	24.32	5.18	13.96	30"ø	14.25	0.12	119'	2.90
CI-2.20	78.95	71.76	CI-2.21	71.70	0.31	.725	0.22	2.91	25.00	5.11	19.37	30"ø	20.15	0.24	25'	4.10
CI-2.21	78.95	71.54	CI-2.23	72.20	0.20	.725	0.15	*	24.32	5.18	*	30"ø	20.97	0.26	192'	4.27
CI-2.21	78.95	71.54	CI-2.28	71.04	–	.725	0.15	*	25.10	5.10	2.14	15"ø	3.17	0.24	25'	2.59
CI-2.22	80.26	74.06	CI-2.23	74.00	0.58	.725	0.42	0.42	25.10	5.10	*	30"ø	20.97	0.26	255'	4.27
CI-2.23	80.26	72.20	CI-2.25	72.85	0.29	.725	0.21	*	26.10	5.01	2.94	15"ø	3.17	0.24	25'	2.59
CI-2.24	80.69	77.44	CI-2.25	77.38	0.81	.725	0.59	0.59	26.26	4.99	*	30"ø	20.97	0.26	250'	2.69
CI-2.25	80.69	72.85	MES-2.26	73.25	0.26	.725	0.19	*	26.10	5.01	*	30"ø	20.97	0.26	155'	4.27
CI-2.27	78.00	72.75	CI-2.28	72.69	0.24	.725	0.17	0.17	25.07	5.10	0.89	15"ø	3.17	0.24	25'	2.59
CI-2.28	78.00	71.04	CI-2.30	70.69	0.17	.725	0.12	*	25.23	5.09	*	30"ø	20.97	0.26	133'	4.27
CI-2.29	78.00	70.85	CI-2.30	70.69	0.09	.725	0.07	0.07	25.75	5.04	0.33	15"ø	3.17	0.24	25'	2.59
CI-2.30	78.00	70.69	MES-2.31	70.50	0.10	.725	0.07	*	25.91	5.02	*	30"ø	20.97	0.26	75'	4.27
CI-3.1	79.55	74.15	MH-3.3	74.08	0.53	.725	0.38	0.38	15.00	6.38	2.45	15"ø	3.24	0.25	30'	2.64
CI-3.2	79.55	74.11	MH-3.3	74.08	0.50	.725	0.36	0.36	15.19	6.35	2.30	15"ø	3.24	0.25	11'	2.64
MH-3.3	79.67	74.08	CI-3.4	74.00	–	.725	–	0.75	15.26	6.34	4.73	18"ø	5.27	0.25	34'	2.98
CI-3.4	79.65	74.00	YD-3.5	73.42	0.44	.725	0.32	1.07	15.45	6.31	6.72	18"ø	7.07	0.45	128'	4.00
CI-3.10	80.36	77.62	CI-3.13	77.56	0.57	.725	0.41	0.41	15.00	6.38	2.64	15"ø	3.17	0.24	25'	2.59
CI-3.11	79.42	75.17	CI-3.12	75.11	0.27	.725	0.20	0.20	15.16	6.36	1.24	15"ø	3.17	0.24	25'	2.59
CI-3.12	79.42	75.11	CI-3.13	74.61	0.10	.725	0.07	0.27	15.32	6.33	1.70	15"ø	3.17	0.24	209'	2.59
CI-3.13	80.36	74.00	YD-3.14	73.63	0.29	.725	0.21	0.89	16.67	6.11	5.45	18"ø	5.17	0.30	125'	3.26
CI-4.1	81.93	77.68	CI-4.2	77.62	0.19	.725	0.14	0.14	15.00	6.38	0.89	15"ø	3.17	0.24	25'	2.59
CI-4.2	81.93	77.62	CI-4.4	77.18	0.63	.725	0.46	0.60	15.16	6.36	3.79	15"ø	3.17	0.24	185'	2.59
CI-4.3	81.95	77.24	CI-4.4	77.18	0.18	.725	0.13	0.13	16.35	6.16	0.80	15"ø	3.17	0.24	25'	2.59
CI-4.4	81.95	77.18	CI-4.6	76.89	0.64	.725	0.46	1.19	16.51	6.13	7.31	24"ø	8.79	0.15	192'	2.80
CI-4.5	81.77	76.95	CI-4.6	76.89	0.19	.725	0.14	0.14	17.66	5.96	0.82	15"ø	3.24	0.25	25'	2.64
CI-4.6	81.77	76.89	CI-4.7	76.44	0.64	.725	0.46	1.79	17.82	5.94	10.65	24"ø	11.11	.024	189'	3.54
CI-4.7	81.59	76.44	CI-4.8	76.37	0.73	.725	0.53	2.32	17.71	5.82	13.51	24"ø	12.42	0.30	25'	3.95
CI-4.8	81.59	76.36	CI-4.10	75.23	0.23	.725	0.17	2.49	18.81	5.80	14.45	24"ø	15.22	0.45	252'	4.84
CI-4.9	81.22	75.30	CI-4.10	75.23	0.78	.725	0.57	0.57	19.68	5.69	3.22	15"ø	3.55	0.30	25'	2.89
CI-4.10	81.22	75.23	CI-4.11	74.73	0.28	.725	0.20	3.26	19.82	5.67	18.48	30"ø	19.29	0.22	228'	3.93
CI-4.11	81.30	74.73	CI-4.12	74.66	0.66	.725	0.48	3.74	20.79	5.56	20.76	30"ø	21.76	0.28	25'	4.43
CI-4.12	81.30	74.66	CI-4.13	74.11	0.20	.725	0.15	3.88	20.89	5.54	21.52	30"ø	22.53	0.30	183'	4.59
CI-4.13	81.30	74.11	MES-4.14	73.53	0.18	.725	0.13	4.01	21.55	5.47	21.93	30"ø	24.33	0.35	165'	4.96

CALCULATIONS BASED ON A 10-YEAR STORM (I = 7.5) (C = 0.725)(75% IMPERVIOUS (0.9), 25% PERVIOUS (0.2)

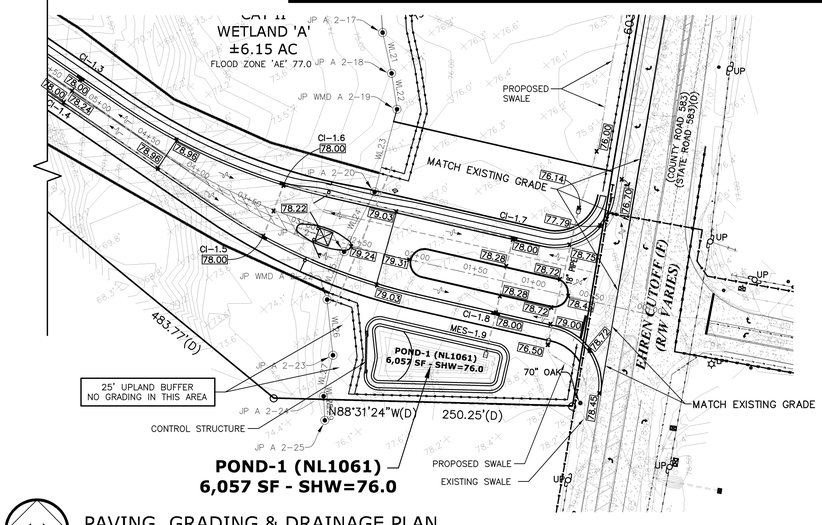

PAVING, GRADING & DRAINAGE PLAN

SCALE: 1"= 60'

60 30 0 60 120

THIS DRAWING AND THE DESIGN SHOWN ARE THE PROPERTY OF SPRING ENGINEERING, INC. AND ARE NOT TO BE REPRODUCED, COPIED, PUBLISHED, OR USED IN WHOLE OR PART WITHOUT WRITTEN CONSENT. THEY ARE TO BE USED ONLY FOR THE SITE AND PROJECT IDENTIFIED AND SHALL BE RETURNED UPON REQUEST.

100%
CONSTRUCTION DOCS.
ISSUE DATE: 02.10.16

REVISIONS

REV	DATE	DESCRIPTION

YANCEY B. ABUTON
P.E. NO. 63766
DATE

PRISTINE LAKE PRESERVE

Ehren Cutoff and Parkway Blvd
Pasco County, Florida

CONTRACT DATE:
August 20, 2015

SPRING ENGINEERING, INC.
ENGINEERING • LAND PLANNING • ARCHITECTURE
3014 U.S. HWY 19, HOLIDAY, FL (727) 938-1516
FL COA NO. 00005158 & LICENSE NO. AA-C001747

PAVING, GRADING AND DRAINAGE PLAN

DESIGNED BY: JAY
DRAWN BY: JAY
CHECKED BY: RPD
JOB NO. 2015-11
SHEET NO. C3.1

LEGAL DESCRIPTION

A PARCEL OF LAND LYING IN SECTION 1, TOWNSHIP 26 SOUTH, RANGE 18 EAST AND SECTION 6, TOWNSHIP 26 SOUTH, RANGE 19 EAST, PASCO COUNTY, FLORIDA, DESCRIBED AS FOLLOWS: BEGINNING AT THE SOUTHEAST CORNER OF THE SOUTHEAST 1/4 OF THE NORTHEAST 1/4 OF SAID SECTION 1; THENCE NORTH 89°05'48" WEST, ALONG THE SOUTH LINE OF THE SOUTHEAST 1/4 OF THE NORTHEAST 1/4, A DISTANCE OF 1324.88 FEET TO THE SOUTHWEST CORNER OF THE SOUTHEAST 1/4 OF THE NORTHEAST 1/4; THENCE NORTH 00°31'20" EAST ALONG THE WEST LINE OF THE SOUTHEAST 1/4 OF THE NORTHEAST 1/4, A DISTANCE OF 713.30 FEET TO THE SOUTHEAST CORNER OF THE NORTH 600.00 FEET OF THE SOUTHWEST 1/4 OF THE NORTHEAST 1/4; THENCE NORTH 89°23'21" WEST, ALONG THE SOUTH LINE OF THE NORTH 600.00 FEET OF THE SOUTHWEST 1/4 OF THE NORTHEAST 1/4, A DISTANCE OF 215.54 FEET TO A POINT OF CURVATURE; THENCE 214.06 FEET ON THE ARC OF A CURVE TO THE LEFT, WITH A RADIUS OF 209.94 FEET, SUBTENDED BY A CHORD OF 204.91 FEET, CHORD BEARING SOUTH 61°24'01" WEST, TO A POINT ON A NON TANGENT LINE AND A POINT ON THE SOUTH LINE OF THE NORTH 700.00 FEET OF THE SOUTHWEST 1/4 OF THE NORTHEAST 1/4; THENCE NORTH 89°23'21" WEST, ALONG THE SOUTH LINE OF THE NORTH 700.00 FEET OF THE SOUTHWEST 1/4 OF THE NORTHEAST 1/4, A DISTANCE OF 931.99 FEET TO THE SOUTHWEST CORNER OF THE NORTH 700.00 FEET OF THE SOUTHWEST 1/4 OF THE NORTHEAST 1/4; THENCE NORTH 00°30'29" EAST, ALONG THE WEST LINE OF THE SOUTHWEST 1/4 OF THE NORTHEAST 1/4, A DISTANCE OF 700.00 FEET TO THE NORTHWEST CORNER OF THE SOUTHWEST 1/4 OF THE NORTHEAST 1/4; THENCE SOUTH 89°23'21" EAST, ALONG THE NORTH LINE OF THE SOUTHWEST 1/4 OF THE NORTHEAST 1/4, A DISTANCE OF 1326.71 FEET TO THE NORTHEAST CORNER OF THE SOUTHWEST 1/4 OF THE NORTHEAST 1/4, ALSO THE NORTHWEST CORNER OF THE SOUTHEAST 1/4 OF THE NORTHEAST 1/4; THENCE SOUTH 89°23'29" EAST ALONG THE NORTH LINE OF THE SOUTHEAST 1/4 OF THE NORTHEAST 1/4, A DISTANCE OF 1326.77 FEET TO THE NORTHEAST CORNER OF THE SOUTHEAST 1/4 OF THE NORTHEAST 1/4; THENCE SOUTH 00°36'20" WEST, ALONG THE EAST LINE OF THE SOUTHEAST 1/4 OF THE NORTHEAST 1/4, A DISTANCE OF 836.44 FEET; THENCE SOUTH 88°31'24" EAST A DISTANCE OF 921.25 FEET MORE OR LESS TO A POINT ON THE WESTERLY RIGHT OF WAY LINE OF EHREN CUTOFF (STATE ROAD 583); THENCE SOUTH 09°34'03" WEST, ALONG SAID RIGHT OF WAY LINE, A DISTANCE OF 603.32 FEET; THENCE LEAVING SAID RIGHT OF WAY LINE, NORTH 88°31'24" WEST, A DISTANCE OF 250.25 FEET; THENCE NORTH 50°36'10" WEST, A DISTANCE OF 483.77 FEET; THENCE SOUTH 00°36'20" WEST, A DISTANCE OF 187.80 FEET TO A POINT ON THE SOUTH BOUNDARY OF THE SOUTHWEST 1/4 OF THE NORTHWEST 1/4 OF SAID SECTION 6; THENCE NORTH 87°19'57" WEST, ALONG THE SOUTH BOUNDARY OF THE SOUTHWEST 1/4 OF THE NORTHWEST 1/4 OF SECTION 6, TOWNSHIP 26 SOUTH, RANGE 19 EAST, PASCO COUNTY, FLORIDA, A DISTANCE OF 200.00 FEET TO THE POINT OF BEGINNING. CONTAINING 70.80 ACRES MORE OR LESS.

EROSION CONTROL NOTES

1. THE PERIMETER CONTROLS (SILT FENCE AND HAY BALES) SHALL BE INSTALLED AROUND THE ENTIRE AREA TO BE DISTURBED, AS SHOWN.
2. SYNTHETIC HAY BALES TO BE PROVIDED AROUND THE NEW CATCH BASINS IMMEDIATELY AFTER THE BASINS ARE INSTALLED AND TEMPORARILY REMOVED FOR PAVEMENT INSTALLATION.
3. SYNTHETIC HAY BALE BARRIERS SHALL BE PROVIDED IN EXISTING UPLAND DITCHES DURING PIPE PLACEMENT AND DITCH FILLING OPERATIONS. SEE DETAIL THIS SHEET.
4. WASTE, SUCH AS DISCARDED BUILDING MATERIALS, CHEMICALS, LITTER OR SANITARY WASTE ARE TO BE PROPERLY CONTROLLED AND NOT DISCHARGED TO THE DRAINAGE DITCHES.
5. TRUCKING OF SEDIMENTS AND GENERATION OF DUST BY OFF-SITE VEHICLES SHALL BE MINIMIZED.
6. PROVIDE TEMPORARY DISTURBED AREA STABILIZATION BY SPREADING RYE GRASS SEED AT THE RATE OF 168 LBS PER ACRE.
7. THE APPLICATION, GENERATION AND MIGRATION OF TOXIC SUBSTANCES SHALL BE LIMITED AND PROPERLY STORED AND DISPOSED OF.
8. EROSION CONTROL DEVICES SHALL BE MAINTAINED IN PROPER WORKING ORDER THROUGHOUT THE CONSTRUCTION. MAINTENANCE SHALL BE PERFORMED AS NEEDED. DEVICES SHALL BE REPAIRED AND/OR REPLACED AS REQUIRED. MATERIAL SHALL BE REMOVED WHEN SEDIMENT BUILD-UP REACHES 50% OF THE HEIGHT OF THE DEVICE.
9. ALL EFFORTS MUST BE UNDERTAKEN TO PREVENT ANY EROSION OR TURBID WATER FROM BEING DISCHARGED INTO WETLANDS AND/OR WATERS OF THE COUNTY. TURBID DISCHARGES THAT EXCEED 50 JTU'S (JACKSON TURBIDITY UNITS) OR 29 NTU'S (NEPHELOMETRIC TURBIDITY UNITS) ABOVE BACKGROUND LEVELS SHALL NOT BE EXCEEDED. HAY BALES, SILT FENCES OR OTHER EPC APPROVED METHODS OF EROSION/TURBIDITY CONTROL ARE REQUIRED. CONTROLS SHOWN ARE MINIMUM REQUIREMENTS. INSTALLATION AND MAINTENANCE OF ADEQUATE CONTROLS SHALL BE THE RESPONSIBILITY OF THE GENERAL CONTRACTOR. CONTROLS SHALL BE MAINTAINED IN GOOD CONDITION THROUGHOUT THE CONSTRUCTION PROCESS AND UNTIL ALL LOOSE SOILS HAVE STABILIZED. CONTROL DEVICES SHALL BE INSPECTED REGULARLY AND MODIFIED AS REQUIRED FOR PROPER OPERATION.

EROSION CONTROL

TREE BARRICADES AND EROSION CONTROL: ALL EROSION CONTROL MEASURES (SILT BARRIERS) AND TREE BARRICADES MUST BE INSTALLED PRIOR TO THE START OF CONSTRUCTION AND REMAIN IN PLACE THROUGHOUT CONSTRUCTION. ENCROACHMENT OR FAILURE TO MAINTAIN THESE BARRICADES COULD RESULT IN ENFORCEMENT ACTION WHICH MAY INCLUDE CITATIONS AND/OR PERMIT REVOCATION. SILTATION BARRIERS SHALL BE MAINTAINED AND REPAIRED AT THE END OF EACH WORKING DAY. HAY BALES SHALL BE INSTALLED ONCE PERIMETER GRADING IS COMPLETED. STORMWATER FACILITIES SHALL HAVE HAY BALES PLACED AROUND THEIR ENTRANCES TO PREVENT SEDIMENT FROM BEING TRANSPORTED INTO THE STORMWATER SYSTEM. HAY BALES SHALL BE PLACED ALONG THE PERIMETER OF ALL DOWNSTREAM BOUNDARIES TO PROVIDE FILTRATION OF RUNOFF DURING CONSTRUCTION. THE HAY BALES SHALL REMAIN IN PLACE UNTIL THE ENGINEER HAS APPROVED THE VEGETATIVE COVER ALONG EMBANKMENTS PROVIDING RUNOFF TO THE PERIMETER. IT IS THE CONTRACTOR'S RESPONSIBILITY TO MAINTAIN SOIL EROSION CONTROL DEVICES. IF AT ANY TIME DRAINAGE STRUCTURES OR EROSION CONTROL DEVICES BECOME DAMAGED OR INOPERABLE, IT IS THE CONTRACTORS RESPONSIBILITY TO REPAIR THEM.

THE CONTRACTOR IS EXPECTED, AT THE END OF EACH DAY, TO HAVE THE SITE GRADED IN SUCH A WAY THAT ADJACENT PROPERTIES ARE NOT ADVERSELY IMPACTED BY EROSION OR SEDIMENT LEAVING THE SITE. CLEARED AREAS SHALL BE STABILIZED EARLY IN THE CONSTRUCTION PROCESS AND IF NATURAL PRECIPITATION DOES NOT PROVIDE PERIODIC WETTING OF THE SITE, THEN THE CONTRACTOR SHALL PROVIDE A METHOD OF SPRAYING THE SITE TO PREVENT WIND EROSION. CONTRACTOR SHALL CLEAR ONLY THAT AREA SHOWN TO BE CLEARED ON THE PLAN. CARE SHALL BE TAKEN TO DISTURB THE EXISTING VEGETATION IN ONLY THOSE AREAS UNDER CONSTRUCTION AT THAT TIME.

ALL CLEAR SITE AREAS SHALL BE KEPT FREE OF ANY SIGNAGE, PLANTINGS, TREES, ETC. IN EXCESS OF THREE-AND-A-HALF (3 1/2) FEET IN HEIGHT. DURING LAND ALTERATION AND CONSTRUCTION ACTIVITIES, IT SHALL BE UNLAWFUL TO REMOVE VEGETATION BY GRUBBING OR TO PLACE SOIL DEPOSITS, DEBRIS, SOLVENTS, CONSTRUCTION MATERIAL, MACHINERY OR OTHER EQUIPMENT OF ANY KIND WITHIN THE DRIP LINE OF A TREE TO REMAIN ON THE SITE UNLESS OTHERWISE APPROVED BY THE LOCAL GOVERNMENT. ALL TREE ROOTS EXISTING WITHIN APPROVED IMPROVEMENT AREAS AND ORIGINATING FROM A PROTECTED TREE SHALL BE SEVERED CLEAN AT THE LIMITS OF THE PRESERVED AREA. ALL TRIMMING UNDERTAKEN ON A TREE PROTECTED BY THE PROVISIONS OF THE LAND DEVELOPMENT CODE SHALL BE PRUNED IN ACCORDANCE WITH THE NATIONAL ARBORIST ASSOCIATION (NAA) PRUNING STANDARDS.

LEGEND

DIRECTION OF FLOW

PROPOSED ELEVATION — 135.44 x

EXISTING ELEVATION — 135.44 x

CURB INLET (SEE DETAIL)

MITERED END SECTION (SEE DETAIL)

STORMWATER PIPE (SEE TABLE FOR SIZES)

SILT FENCE (SEE DETAIL)

SILT FENCE DETAIL

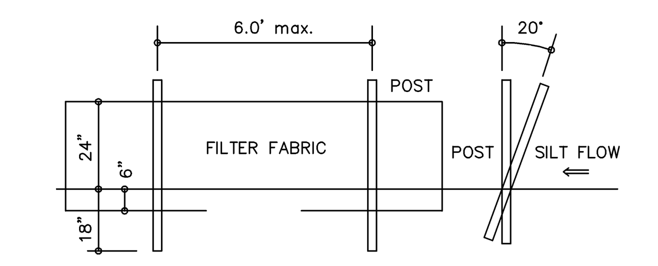

1. FILTER FABRIC TO CONFORM WITH F.D.O.T. SPECIFICATIONS (SEC. 985)
2. POSTS TO BE 2"x4" WOOD POST OR 1.3 LB/FT STEEL POST.
3. POST POSITION TO BE CANTED (20°) OR VERTICAL (90°).
4. DO NOT DEPLOY IN A MANNER THAT SILT FENCE WILL ACT AS A DAM ACROSS PERMANENT FLOWING WATER COURSES.

SECTION 01, TOWNSHIP 26 SOUTH, RANGE 18 EAST
SECTION 06, TOWNSHIP 26 SOUTH, RANGE 19 EAST
PASCO COUNTY, FLORIDA

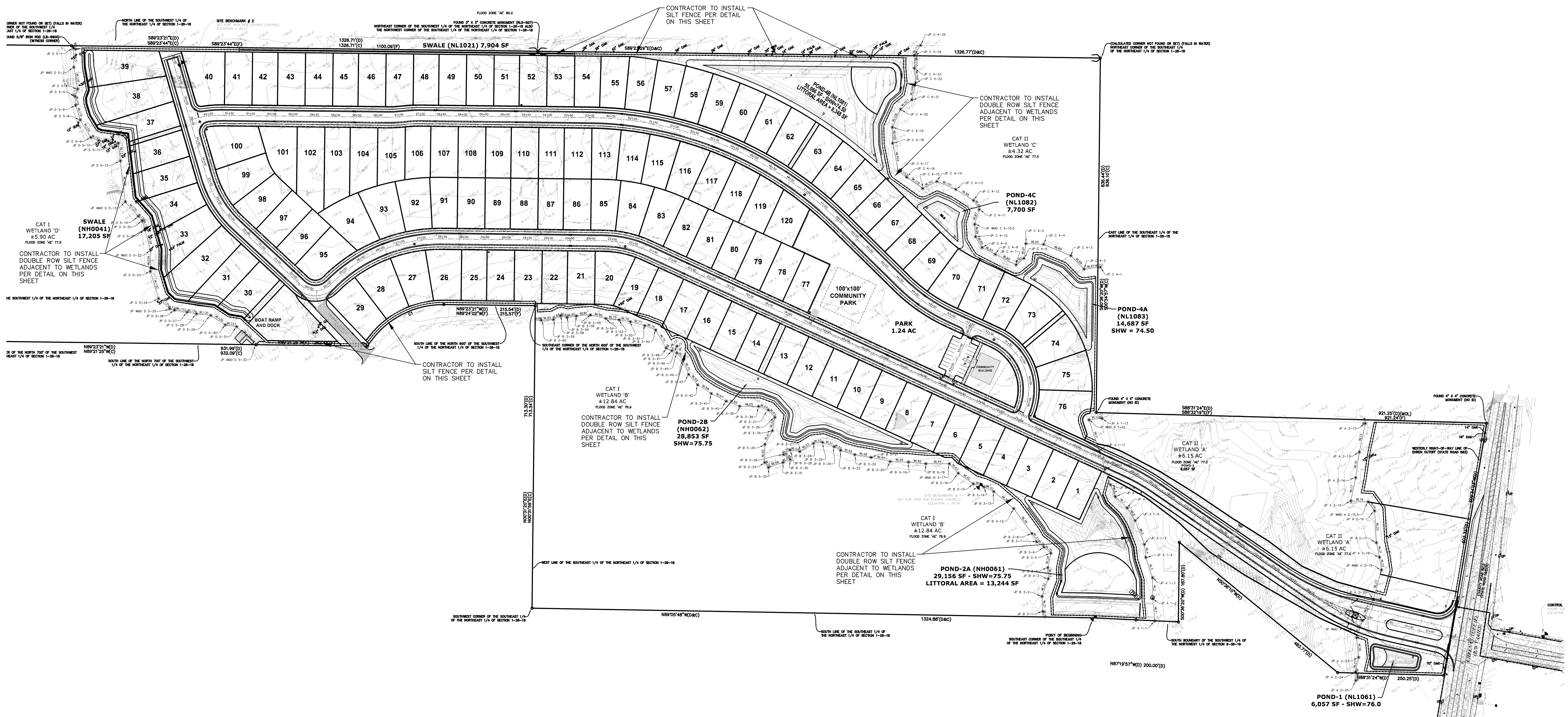

NORTH

CONSTRUCTION SURFACE WATER MANAGEMENT PLAN

SCALE: 1" = 120'

120 60 0 120 240

THIS DRAWING AND THE DESIGN SHOWN ARE THE PROPERTY OF SPRING ENGINEERING, INC. AND ARE NOT TO BE REPRODUCED, COPIED, PUBLISHED, OR USED IN WHOLE OR PART WITHOUT WRITTEN CONSENT. THEY ARE TO BE USED ONLY FOR THE SITE AND PROJECT IDENTIFIED AND SHALL BE RETURNED UPON REQUEST.

100%
CONSTRUCTION DOCS.
ISSUE DATE: 02.10.16

REVISIONS

REV	DATE	DESCRIPTION

NOT VALID WITHOUT SIGNATURE AND EMBOSSED SEAL
YANCEY B. ABUTON
P.E. NO. 63766
DATE

PRISTINE LAKE PRESERVE

Ehren Cutoff and Parkway Blvd
Pasco County, Florida

CONTRACT DATE:
August 20, 2015

SPRING ENGINEERING, INC.
ENGINEERING • LAND PLANNING • ARCHITECTURE
3014 U.S. HWY 19, HOLIDAY, FL (727) 938-1516
FL COA NO. 00005158 & LICENSE NO. AIA-C001747

CONSTRUCTION SURFACE WATER MANAGEMENT PLAN

DESIGNED BY: JAY
DRAWN BY: JAY
CHECKED BY: RPD
JOB NO.
2015-11
SHEET NO.
C3.2

NPDES SOIL EROSION CONTROL AND POLLUTION PREVENTION NOTES

ALL EROSION CONTROL DEVICES SHALL BE INSTALLED IN ACCORDANCE WITH ALL LOCAL, STATE AND FEDERAL STANDARDS. AN EPA EQUIVALENT NOTICE OF INTENT LETTER SHALL BE POSTED IN THE JOB TRAILER AT ALL TIMES. THIS SITE SHALL BE PROTECTED BY MEANS DESCRIBED IN THE ACCOMPANYING PLANS. IF THERE ARE ANY QUESTIONS REGARDING EROSION CONTROL MEASURES, THE CIVIL ENGINEER OF RECORD MUST BE CONTACTED.

A COPY OF THIS SHEET AND THE EROSION CONTROL PLAN MUST BE KEPT ON-SITE THROUGH THE DURATION OF CONSTRUCTION ACTIVITY. ANY CHANGES MADE TO THIS PLAN MUST BE NOTED, DATED, AND INITIALED BY THE GENERAL CONTRACTOR.

I. GENERAL

THE PROPOSED PLAN INCLUDES THE DEMOLITION OF EXISTING TREES AND CONSTRUCTION OF NEW 120 UNIT RESIDENTIAL DEVELOPMENT, ALONG WITH NEW STORMWATER AND UTILITY INFRASTRUCTURE.

THE INTENT OF THIS PLAN IS TO CONTROL EROSION AND RESULTING SILT TRANSPORTATION OFF SITE. THE ITEMS INDICATED ARE THE ENGINEERS BEST ESTIMATE OF REQUIREMENTS. MORE CONTROL MAY BE NEEDED DEPENDING ON SITE CONDITIONS, SEASON, ETC. CONTRACTOR SHALL INSTALL ADDITIONAL MEASURES AS NECESSARY TO COMPLY WITH THIS INTENT. ALL CHANGES TO THE STORMWATER POLLUTION PREVENTION PLAN (SWPPP) MUST BE NOTED.

A. BEST MANAGEMENT PRACTICES PLAN WITH ALL SEDIMENT AND EROSION CONTROL PLANS SHALL BE KEPT ON-SITE WITH COPIES OF ALL INSPECTION REPORTS.

B. EXISTING TOPOGRAPHY AND PROPOSED TOPOGRAPHY ARE SHOWN ON THE GRADING PLAN.

C. SEDIMENT AND EROSION CONTROL MEASURES SHALL BE CONSTRUCTED PRIOR TO ANY LAND DISTURBING ACTIVITY TAKING PLACE.

D. OTHER LOCAL, STATE OR FEDERAL STATUTES OR REQUIREMENTS THAT MAY AFFECT THE PERMIT REQUIREMENTS FOR THIS SITE:

1. NPDES CONSTRUCTION STORM WATER MANAGEMENT DISCHARGE CRITERION
2. UNITED STATES ARMY CORPS OF ENGINEERS
3. LOCAL SEDIMENT CONTROL ORDINANCES
4. HAZARDOUS WASTE CONCERNS
5. PROTECTED SPECIES, HISTORICAL PRESERVATION, ETC.

E. MATERIAL NEEDS AFFECTING ENVIRONMENTAL ASPECTS OF THE SITE

1. HAUL-IN/HAUL-OFF
2. TOPSOIL SPOIL OR HAUL-IN

F. PLANNED PHASES OF CONSTRUCTION

1. FLAG ALL WORK LIMITS.
2. CALL THE STATE UTILITY PROTECTION SERVICE TO VERIFY LOCATION OF ANY EXISTING UTILITIES TWO (2) WORKING DAYS PRIOR TO START OF CONSTRUCTION.
3. NOTIFY SEDIMENT CONTROL INSPECTOR TWENTY-FOUR (24) HOURS PRIOR TO START OF CONSTRUCTION.
4. IDENTIFY AND PROTECT ALL EXISTING VEGETATION TO REMAIN.
5. PERFORM CLEARING AND GRADING REQUIRED FOR INSTALLATION OF PERIMETER CONTROLS.
6. INSTALL PERIMETER RUNOFF CONTROLS. NOTIFY SEDIMENT CONTROL INSPECTOR AND OBTAIN APPROVAL BEFORE PROCEEDING FURTHER.
7. INSTALL STORM DRAINAGE PROTECTION.
8. CLEAR AND STABILIZE CONSTRUCTION ACCESS.
9. COMPLETE ALL REQUIRED STOCKPILING, SITE CLEARING AND GRADING.
10. APPLY TEMPORARY OR PERMANENT STABILIZATION MEASURE IMMEDIATELY ON ALL DISTURBED AREAS WHERE WORK MAY BE DELAYED OR IS COMPLETE. DO NOT LEAVE LARGE AREAS UNPROTECTED FOR MORE THAN SEVEN (7) DAYS.
11. CONSTRUCT PARKING LOT BASE, BUILDING FOUNDATION AND INSTALL SITE UTILITIES.
12. WEATHER-IN BUILDING.
13. COMPLETE PARKING LOT CONSTRUCTION.
14. COMPLETE FINAL GRADING, STABILIZATION AND LANDSCAPING.
15. NOTIFY SEDIMENT CONTROL INSPECTOR AND OBTAIN APPROVAL TO REMOVE SEDIMENT AND EROSION CONTROL MEASURES.

II. IMPLEMENTATION

PLANNED CONSTRUCTION PHASING AND SPECIFIC REQUIRED SEDIMENT AND EROSION CONTROL MEASURES.

A. PHASE 1: TOPSOIL STRIPPING AND STOCKPILING – THIS IS THE PHASE AFTER ALL DEBRIS REMOVAL. TOPSOIL WILL BE STRIPPED AND STOCKPILED ON THE SITE. THE FOLLOWING REQUIREMENTS WILL APPLY DURING THIS PHASE OF CONSTRUCTION.

1. CONSTRUCTION OF AN FDOT SOIL TRACKING PREVENTION DEVICE TYPE A INDEX 106 SHALL BE COMPLETED TO PREVENT SILT FROM BEING DEPOSITED ON ROADWAYS.
2. SILT FENCES AND/OR DIVERSIONS DIRECTING RUNOFF TO TEMPORARY SEDIMENT BASINS SHALL BE PLACED ON THE DOWNHILL SIDE OF WHEREVER DIRT HAS BEEN DISTURBED BY GRADING TO PREVENT SILT FROM LEAVING THE SITE. SPECIFIC ATTENTION SHOULD BE PAID TO CULVERTS AND CONSTRUCTION ENTRANCES.
3. ALL DEBRIS SHALL BE KEPT AWAY FROM DITCHES AND STREAMS TO PREVENT RUNOFF ACCUMULATION WILL NOT CARRY DEBRIS DOWNSTREAM.
4. SILT FENCES OR DOUBLE SILT FENCES SHALL BE INSTALLED ALONG THE LOW SIDE OF THE SITE WHERE RUN-OFF FROM THE WORK AREA WILL LEAVE THE SITE OR ENTER A DITCH.
5. SILT TRAPS AND SEDIMENT BASINS SHALL BE INSTALLED WHERE/IF SHOWN ON THE PLANS IN ACCORDANCE WITH DETAILS SHOWN TO CATCH AND FILTER RUN-OFF PRIOR TO DISCHARGE FROM THE SITE.
6. ADDITIONAL SILT FENCING AROUND THE STOCKPILE AREA SHOULD BE INSTALLED TO PREVENT SILT WASH OFF FROM THE SITE.

B. PHASE 2: GRADING OPERATIONS – THIS PHASE IS THAT TIME WHEN EARTH IS BEING MOVED FROM ONE PORTION OF THE SITE TO ANOTHER OR IS BEING HAULED INTO OR HAULED OFF FROM THE SITE. THIS IS A CRITICAL TIME WHEN SEDIMENT AND EROSION CONTROL FACILITIES MUST BE CONTINUALLY CHECKED TO ENSURE EFFECTIVENESS. MEASURES SHOULD BE CHANGED OUT AS OFTEN AS REQUIRED TO MEET DEMANDS OF CURRENT SITE CONDITIONS. THE FOLLOWING WILL APPLY TO THIS STAGE OF CONSTRUCTION.

1. ALL SEDIMENT CONTROL FACILITIES REQUIRED AND INSTALLED DURING PHASE 1 SHALL BE LEFT IN PLACE AND MAINTAINED AS APPROPRIATE.
2. WHENEVER A SILT CONTROL FACILITY IS REMOVED BECAUSE OF CHANGING SITE CONDITIONS IT SHALL BE IMMEDIATELY REPLACED WITH ANOTHER MEASURE OF EQUAL OR GREATER EFFECTIVENESS THAT WILL CONTRIBUTE TO THE PROGRAM OF SILT AND EROSION CONTROL.
3. CUT SLOPES SHALL BE PROTECTED BY CONSTRUCTING SWALES AT THE TOP OF CUT SLOPES TO INTERCEPT RUN-OFF. SWALES WILL BE CONSTRUCTED WITH RIP-RAP CHECK DAMS OR SILT FENCES AS NECESSARY TO PREVENT EROSION AND SILTATION.
4. FILL SLOPES SHALL BE PROTECTED BY THE CONSTRUCTION OF BERMS AT THE TOP OF ALL FILL SLOPES TO PREVENT UNCONTROLLED RUN-OFF DRAINING DOWN FACE OF SLOPES.
5. WHEN SHOWN ON PLAN, RUN-OFF DIRECTING BERMS FOR UPGRADE RUN-OFF SHALL BE CONSTRUCTED ALONG SLOPE TO DRAINS THAT WILL CARRY RUN-OFF DOWN THE SLOPE. SLOPE DRAINS SHALL HAVE INLET SILT PROTECTION TYPICAL OF OTHER SITE STORM INLET PROTECTION.
6. SILT FENCES SHALL BE IN PLACE AT THE TOE OF ALL FILL SLOPES.
7. TERRACES, BERMS AND SWALES SHALL BE CONSTRUCTED AT INTERMEDIATE LOCATIONS THROUGHOUT THE SITE AS NECESSARY TO CONTROL EROSION AND SEDIMENT TRANSPORT. THESE DIVERSION FACILITIES SHALL BE SUPPLEMENTED AS APPROPRIATE WITH SILT FENCES AND RIP-RAP FILTER BERMS TO FILTER ACCUMULATED SEDIMENT FROM RUN-OFF PRIOR TO DISCHARGE FROM THE SITE.
8. SLOPES (CUT AND FILL) THAT ARE CONSTRUCTED IN THE FINAL CONFIGURATION SHALL BE COVERED WITH FOUR INCHES (4") OF TOPSOIL AND GRASSED AND MULCHED AS SOON AS GRADING IS COMPLETED. THIS GROWING VEGETATION WILL GIVE ADDED PROTECTION TO THE SLOPE.
9. PORTIONS OF THE SITE THAT ARE GRADED TO FINAL GRADE AND ARE NOT TO RECEIVE PAVEMENT OR BUILDINGS SHOULD HAVE FOUR INCHES (4") OF TOPSOIL SPREAD OVER THE SURFACE AND GRASSED AS SOON AS POSSIBLE IN CONSTRUCTION PROCESS. THIS PHASE OF CONSTRUCTION IS CRITICAL IN THE EROSION AND SEDIMENT CONTROL PROCESS.
10. STORM SEWERS SHOULD BE INSTALLED AS SOON AS POSSIBLE IN THE CONSTRUCTION PROCESS AND CONCURRENT TO GRADING OPERATIONS WHENEVER POSSIBLE TO ENSURE A SUCCESSFUL PROGRAM. CONSTRUCTION RUN-OFF SHALL BE DIRECTED TO STORM SEWER SYSTEM AS SOON AS POSSIBLE.

C. PHASE 3: STORM DRAINAGE AND UTILITY INSTALLATION PLAN – THIS PHASE WILL BE COMPLETED AFTER OR CONCURRENT WITH THE GRADING PHASE. THE FOLLOWING WILL APPLY TO THIS PHASE OF CONSTRUCTION.

1. ALL ASPECTS OF THE PREVIOUS PHASES SHALL BE MAINTAINED AS APPLICABLE.
2. STORM SEWERS THAT ARE INSTALLED SHALL BE PUT INTO SERVICE IMMEDIATELY. THE INLETS OF ALL STORM SEWERS SHALL BE PROTECTED WITH SILT TRAPS THAT PREVENT SEDIMENT FROM ENTERING PIPE. THIS PROTECTION CAN BE SILT FENCE OR RIP-RAP FILTER BERMS AS APPLICABLE AND SHOWN ON THE PLANS.
3. RIP-RAP AS SHOWN ON THE PLANS AND AS REQUIRED ON THE SITE WILL BE INSTALLED AT EMERGENCY SPILLWAYS TO PREVENT EROSION DUE TO OUTFLOW WATER VELOCITY. RIP-RAP SHALL BE EXTENDED DOWNSTREAM AS NEEDED TO PREVENT EROSION.
4. ADDITIONAL SILT FENCING SHALL BE INSTALLED AS NECESSARY TO PREVENT EROSION AND SILTATION RESULTING FROM STOCKPILED EXCAVATION MATERIAL FROM UTILITY INSTALLATION OPERATIONS.

D. PHASE 4: FINISH GRADING, CURB AND PAVEMENT INSTALLATION, LANDSCAPING – THIS IS THE WRAP-UP STAGE WHEN ALL TEMPORARY SEDIMENT AND EROSION CONTROL MEASURES WILL BE PHASED OUT. THE FOLLOWING WILL APPLY TO THIS PHASE:

1. ALL FACILITIES WILL BE MAINTAINED, MODIFIED OR REMOVED WHEN APPROPRIATE.
2. SILT TRAPS AROUND DRAINAGE INLETS WILL BE MAINTAINED, MODIFIED AS NECESSARY AND REMOVED WHEN APPROPRIATE.
3. ALL AREAS NOT RECEIVING PAVEMENT OR BUILDINGS SHALL HAVE FOUR INCHES (4") OF TOPSOIL SPREAD OVER THE AREA AND GRASSED, OR HAVE LANDSCAPING, MULCHING AND/OR SOD INSTALLED PER THE PLANS.
4. CONTRACTOR MAY TEMPORARILY COVER SOME AREAS WITH 2½" THICK GRADED AGGREGATE IN LIEU OF GRASSING FOR TEMPORARY EROSION CONTROL.

E. LANDSCAPING / SEEDING

REFER TO LANDSCAPING PLAN FOR ACTUAL REQUIREMENTS FOR THE INSTALLATION OF LIME, FERTILIZER, SEED AN MULCH. GRASSING OPERATIONS SHALL BE COMPLETED THROUGHOUT CONSTRUCTION PROCESS AT THOSE TIMES WHEN PORTIONS OF THE SITE ARE FINISHED AND READY FOR PERMANENT GROUND COVER. THIS WILL REQUIRE MULTIPLE EFFORTS BY THE GRASSING SUBCONTRACTOR TO STABILIZE ALL IMPACTED AREAS OF THE SITE IN AN ORDERLY FASHION. NO AREA OF THE SITE THAT RECEIVES FINAL GRADE SHALL BE LEFT FOR MORE THAN SEVEN (7) DAYS WITHOUT THE APPLICATION OF SEED AND MULCH.

F. INSPECTION AND MAINTENANCE INSTRUCTIONS:
THE FOLLOWING WILL APPLY TO MAINTAINING EROSION AND SEDIMENT CONTROL FACILITIES:

1. ALL EROSION AND SEDIMENT CONTROL FACILITIES SHALL BE INSPECTED REGULARLY TO ENSURE THEY ARE EFFECTIVE IN THE EVENT OF RAINFALL. MEASURES SHALL BE INSPECTED ONCE A WEEK (MINIMUM) AND WITHIN TWENTY-FOUR (24) HOURS AFTER EACH RAINFALL EVENT THAT IS 0.5" INCHES OR GREATER. ANY DAMAGED OR NONFUNCTIONAL FACILITY SHALL BE REPAIRED OR REPLACED IMMEDIATELY. INSPECTION REPORTS SHALL BE KEPT ON FILE IN THE CONSTRUCTION TRAILER. REQUEST A COPY OF AN ACCEPTABLE INSPECTION FORM FROM THE ENGINEER OF RECORD.
2. SEDIMENT TRAPS SHALL BE CHECKED REGULARLY FOR SEDIMENT CLEANOUT. SEDIMENT SHALL BE REMOVED AND THE TRAP RESTORED TO ITS ORIGINAL DIMENSIONS WHEN THE SEDIMENT HAS ACCUMULATED TO ONE-HALF OF THE DESIGN VOLUME OF THE WET STORAGE. SEDIMENT REMOVED FROM THE TRAP SHALL BE DEPOSITED IN SUITABLE AREAS AND IN SUCH A MANNER THAT IT WILL NOT ERODE AND CAUSE CONTINUED SEDIMENTATION PROBLEMS.
3. GRAVEL OUTLETS AND CHECK DAMS SHALL BE INSPECTED REGULARLY FOR SEDIMENT BUILDUP WHICH WILL PREVENT DRAINAGE. IF THE GRAVEL IS OBSTRUCTED BY SEDIMENT. IT SHALL BE REMOVED AND CLEANED OR REPLACED.
4. SILT FENCE BARRIERS SHALL BE CHECKED REGULARLY FOR UNDERMINING OR DETERIORATION OF THE FABRIC. SEDIMENT SHALL BE REMOVED WHEN THE LEVEL OF DEPOSIT REACHES ONE-THIRD THE HEIGHT OF THE BARRIER.
5. SEEDED AREAS SHALL BE CHECKED REGULARLY TO ENSURE A GOOD STAND IS MAINTAINED. AREAS SHOULD BE FERTILIZED AND RE-SEEDED AS NECESSARY.
6. IF ANY FACILITY IS DAMAGED DURING MAINTENANCE OR OTHERWISE, THE DAMAGED PORTION SHALL BE REMOVED AND REPLACED ACCORDING TO THE ASSOCIATED DETAIL.
7. IF SILT HAS OBSTRUCTED THE SEDIMENT CONTROL FACILITY TO THE POINT OF ELIMINATING ALL FILTERING EFFECTIVENESS, THE STRUCTURE SHALL BE REMOVED AND REPLACED WITH A NEW STRUCTURE IN ACCORDANCE WITH THE ASSOCIATED DETAIL.
8. CONSTRUCTION STAGING AREA SHALL HAVE ADDITIONAL STONE ADDED AS MUD COVERS STONE. UNDER WET SOIL CONDITIONS, TIRES SHALL BE WASHED PRIOR TO ENTERING A PAVED ROADWAY.
9. QUALIFIED PERSONNEL WILL INSPECT ALL POINTS OF DISCHARGES, ALL DISTURBED AREAS OF CONSTRUCTION THAT HAVE NOT BEEN STABILIZED, CONSTRUCTED AREAS AND LOCATIONS WHERE VEHICLES ENTER AND EXIT THE SITE AT LEAST ONCE EVERY 7 CALENDAR DAYS OR WITHIN 24 HOURS OF THE END OF A RAINFALL EVENT THAT IS 0.5 INCHES OR GREATER. WHERE SITES HAVE BEEN FINALLY STABILIZED, SAID INSPECTIONS SHALL BE CONDUCTED AT LEAST ONCE EVERY MONTH UNTIL THE NOTICE OF TERMINATION IS FILED.

G. MAINTAINING EFFECTIVENESS:

CONTRACTOR SHALL INSPECT OVERALL PERFORMANCE OF EROSION AND SEDIMENT CONTROL FACILITIES AND AREAS DOWNSTREAM. IF SILT IS APPARENT DOWNSTREAM FROM STRUCTURES, SOME FAILURE HAS OCCURRED. IF SEDIMENT IS OBSERVED DOWNSTREAM, NOTIFY THE CIVIL ENGINEER. THE CIVIL ENGINEER WILL INSPECT THE CONDITION AND AFTER INSPECTION, DIRECT THE REMOVAL OF ACCUMULATED SEDIMENT DOWNSTREAM AND ADD ADDITIONAL STRUCTURAL MEASURES AS NECESSARY. CONTRACTOR SHALL IMPLEMENT RECOMMENDED SOLUTIONS TO PROBLEM AREAS AS RECOMMENDED.

III. COMPLETION

A. PROJECT CLOSE OUT:
THE FOLLOWING SHALL BE DONE AT THE END OF THE PROJECT.

1. INSPECT SITE TO ENSURE THAT GROUND COVER IS COMPLETE AND ADEQUATE. ALL AREAS SHOULD BE EITHER PAVED OR HAVE SUFFICIENT GROUND COVER (MINIMUM 80% VEGETATIVE COVER) WITH NO APPARENT EROSION.
2. WHEN GROUND COVER INSPECTION IS MADE AND APPROVED, ALL STRUCTURAL EROSION CONTROL FACILITIES MY BE REMOVED ALONG WITH ANY ACCUMULATED SILT AND DEBRIS. AREAS DISTURBED BY STRUCTURE REMOVAL SHALL BE FINE GRADED, GRASSED, AND MULCHED AS REQUIRED.
3. IF GROUND COVER INSPECTION IS MADE AND PROBLEMS DISCOVERED, PERFORM APPROPRIATE REPAIR MEASURES AND RE-INSPECT PRIOR TO STRUCTURE REMOVAL.
4. ALL CONSTRUCTED AND EXISTING STORM SEWERS SHALL BE INSPECTED UPON REMOVAL OF INLET PROTECTION. STRUCTURES CONTAINING SEDIMENT AND/OR CONSTRUCTION DEBRIS SHALL BE VACUUM CLEANED PRIOR TO FILING NOTICE OF TERMINATION WITH ENVIRONMENTAL PROTECTION AGENCY.

B. MISCELLANEOUS ISSUES

1. NO FUEL OR OIL SHALL BE STORED ON SITE WITHOUT PROPER CONTAINMENT.
2. NO OILS OR GAS SHALL BE DUMPED ON SITE.
3. LOCATION OF TRAILER AND PORTABLE RESTROOM FACILITY SHALL BE FIELD DETERMINED TO AVOID CONSTRUCTION ACTIVITIES. LOCATION SHALL CHANGE DURING CONSTRUCTION AS NECESSARY.
4. DE-WATERING OPERATIONS ARE NOT REQUIRED ON THIS PROJECT. IF REQUIRED, PUMPED GROUND WATER SHALL BE ROUTED THROUGH SILT CONTROL FACILITY TO FILTER WATER PRIOR TO DISCHARGE.
5. PROJECT SITE SHALL BE KEPT AS CLEAR OF ALL TRASH AND CONSTRUCTION DEBRIS. CONTRACTOR SHALL HAVE TRASH COLLECTED WEEKLY AND PLACED IN DUMPSTER TO BE HAULED OFF-SITE.
6. ALL WATER SUPPLY WILL BE PROVIDED FROM PUBLIC WATER SUPPLY.
7. ALL HUMAN WASTE SHALL BE COLLECTED IN A PORTABLE RESTROOM FACILITY. WASTES SHALL BE DISPOSED OF BY A LICENSED VENDOR.
8. ANY SPILLED OIL, GAS, ETC. RESULTING FROM CONSTRUCTION ACTIVITIES SHALL BE CONTAINED AND CLEANED IMMEDIATELY. CONTAMINATED SOILS SHALL BE DISPOSED OF IN AN APPROVED MANNER AT A LICENSED LANDFILL.
9. DUST SUPPRESSION OPERATIONS SHALL BE PERFORMED BY MEANS OF A WATER TRUCK DISTRIBUTING A FINE MIST OF WATER ON THE SITE SURFACE. CONCENTRATE STREAMS OF WATER SPRAY SHOULD BE AVOIDED.
10. A DESIGNATED CONCRETE SPOILS AREA SHALL BE IDENTIFIED ON THE SITE. ALL AFFECTED SOILS AND CONCRETE SPOILS IN THIS AREA SHALL BE REMOVED FROM THE SITE UPON COMPLETION OF CONCRETE PLACEMENT ACTIVITIES.
11. ANY NON-STORM DISCHARGES SUCH AS, BUT NOT LIMITED TO , FIRE HYDRANT FLUSHINGS, WASH WATERS, DUST CONTROL, IRRIGATION DRAINAGE, ETC. THAT DO NOT CONTAIN HAZARDOUS MATERIALS SHALL BE PREVENTED FROM ALLOWING SEDIMENT TRANSPORT INTO STORM SEWERS. FLUSHINGS THAT CONTAIN HAZARDOUS MATERIALS SHALL BE PREVENTED FROM ENTERING THE STORM SEWERS AND SHALL BE COLLECTED AND DISPOSED OF IN AN APPROVED MANNER.

B. MISCELLANEOUS ISSUES (CONT.)

12. ALL EROSION CONTROL MEASURES (SILT BARRIERS) MUST BE INSTALLED PRIOR TO THE START OF CONSTRUCTION AND REMAIN IN PLACE THROUGHOUT CONSTRUCTION. ENCROACHMENT OR FAILURE TO MAINTAIN THESE BARRICADES COULD RESULT IN ENFORCEMENT ACTION WHICH MAY INCLUDE CITATIONS AND/OR PERMIT REVOCATION. SILTATION BARRIERS SHALL BE MAINTAINED AND REPAIRED AT THE END OF EACH WORKING DAY. HAY BALES SHALL BE INSTALLED ONCE PERIMETER GRADING IS COMPLETED. STORMWATER FACILITIES SHALL HAVE HAY BALES PLACED AROUND THEIR ENTRANCES TO PREVENT SEDIMENT FROM BEING TRANSPORTED INTO THE STORMWATER SYSTEM. HAY BALES SHALL BE PLACED ALONG THE PERIMETER OF ALL DOWNSTREAM BOUNDARIES TO PROVIDE FILTRATION OF RUNOFF DURING CONSTRUCTION. THE HAY BALES SHALL REMAIN IN PLACE UNTIL THE ENGINEER HAS APPROVED THE VEGETATIVE COVER ALONG EMBANKMENTS PROVIDING RUNOFF TO THE PERIMETER. IT IS THE CONTRACTOR'S RESPONSIBILITY TO REPAIR THEM. THE CONTRACTOR IS EXPECTED, AT THE END OF EACH DAY, TO HAVE THE SITE GRADED IN SUCH A WAY THAT ADJACENT PROPERTIES ARE NOT ADVERSELY IMPACTED BY EROSION OR SEDIMENT LEAVING THE SITE. CLEARED AREAS SHALL BE STABILIZED EARLY IN THE CONSTRUCTION PROCESS AND IF NATURAL PRECIPITATION DOES NOT PROVIDE PERIODIC WETTING OF THE SITE, THEN THE CONTRACTOR SHALL PROVIDE A METHOD OF SPRAYING THE SITE TO PREVENT WIND EROSION.

CHARACTERISTICS OF THE DISCHARGE POINT:

SOILS DATA: EXISTING SOIL TYPE IN THE AREA IS SMYRNA FINE SAND TYPE A/D ESTIMATED SEASONAL HIGH WATER TABLE OF 0.0-1.0 FEET BELOW EXISTING GRADE.

DRAINAGE AREA FOR EXISTING PONDS: 70.8 ACRES, THE BUILDING AREAS AND DRIVEWAYS WILL DRAIN INTO AREA INLETS FROM ASPHALT VEHICULAR AREAS GRADED AT 1-2%±.

LATITUDE AND LONGITUDE OF PROJECT: 28°15'16" N, 82°27'20" W, DISCHARGES INTO THE EXISTING STORMWATER SYSTEM AT THE NORTHEAST CORNER OF THE SITE.

CONTROLS FOR OTHER POTENTIAL POLLUTANTS:

ALL CONSTRUCTION MATERIALS AND DEBRIS WILL BE PLACED IN A DUMPSTER AND HAULED OFF SITE TO A LANDFILL OR OTHER DISPOSAL SITE. NO MATERIALS WILL BE BURIED ON SITE.

FERTILIZERS AND PESTICIDES WILL BE USED AT A MINIMUM AND IN ACCORDANCE WITH THE MANUFACTURER'S SUGGESTED APPLICATION RATES.

NON-STORMWATER DISCHARGES:

IT IS EXPECTED THAT THE FOLLOWING NON-STORMWATER DISCHARGES MAY OCCUR FROM THE SITE DURING THE CONSTRUCTION PERIOD: WATER FROM WATER LINE FLUSHING, PAVEMENT WASH WATER (WHERE NO SPILLS OR LEAKS OF TOXIC OR HAZARDOUS MATERIALS HAVE OCCURRED), AND UNCONTAMINATED GROUNDWATER (FROM DEWATERING EXCAVATION). IF SAID DISCHARGES DO OCCUR, THEY WILL BE DIRECTED TO THE RETENTION POND PRIOR TO DISCHARGE. TURBID WATER FROM THE STORMWATER POND SHALL NOT BE PUMPED DIRECTLY INTO THE REGIONAL DITCH. ANY PUMPED WATER FROM THE STORMWATER POND SHALL BE TREATED SO AS TO NOT ALLOW A DISCHARGE OF POLLUTED STORMWATER. TREATMENT CAN INCLUDE SILT FENCES, SETTLING PONDS, THE PROPER USE OF FLOCCULATING AGENTS OR OTHER APPROPRIATE MEANS.

CONTRACTOR/SUBCONTRACTOR CERTIFICATION:

"I CERTIFY UNDER PENALTY OF LAW THAT I UNDERSTAND, AND SHALL COMPLY WITH, THE TERMS AND CONDITIONS OF THE STATE OF FLORIDA GENERIC PERMIT FOR STORMWATER DISCHARGE FROM LARGE AND SMALL CONSTRUCTION ACTIVITIES AND THIS STORMWATER POLLUTION PREVENTION PLAN PREPARED THEREUNDER."

CONTRACTOR SUPERVISOR, TITLE	KURT HULL, MANAGING MEMBER
CONTRACTOR COMPANY:	PRISTINE LAKE, LLC

STANDARD PERMIT CONDITIONS:

"I CERTIFY UNDER PENALTY OF LAW THAT THIS DOCUMENT AND ALL ATTACHMENTS WERE PREPARED UNDER MY DIRECTION OR SUPERVISION IN ACCORDANCE WITH A SYSTEM DESIGNED TO ASSURE THAT QUALIFIED PERSONNEL PROPERLY GATHERED AND EVALUATED THE INFORMATION SUBMITTED. BASED ON MY INQUIRY OF THE PERSON OR PERSONS WHO MANAGE THE SYSTEM, OR THOSE PERSONS DIRECTLY RESPONSIBLE FOR GATHERING THE INFORMATION, THE INFORMATION SUBMITTED IS, TO THE BEST OF MY KNOWLEDGE AND BELIEF, TRUE, ACCURATE, AND COMPLETE. I AM AWARE THAT THERE ARE SIGNIFICANT PENALTIES FOR SUBMITTING FALSE INFORMATION, INCLUDING THE POSSIBILITY OF FINE AND IMPRISONMENT FOR KNOWING VIOLATIONS."

ROLAND P. DOVE P.E., DIRECTOR OF ENGINEERING
SPRING ENGINEERING, INC.

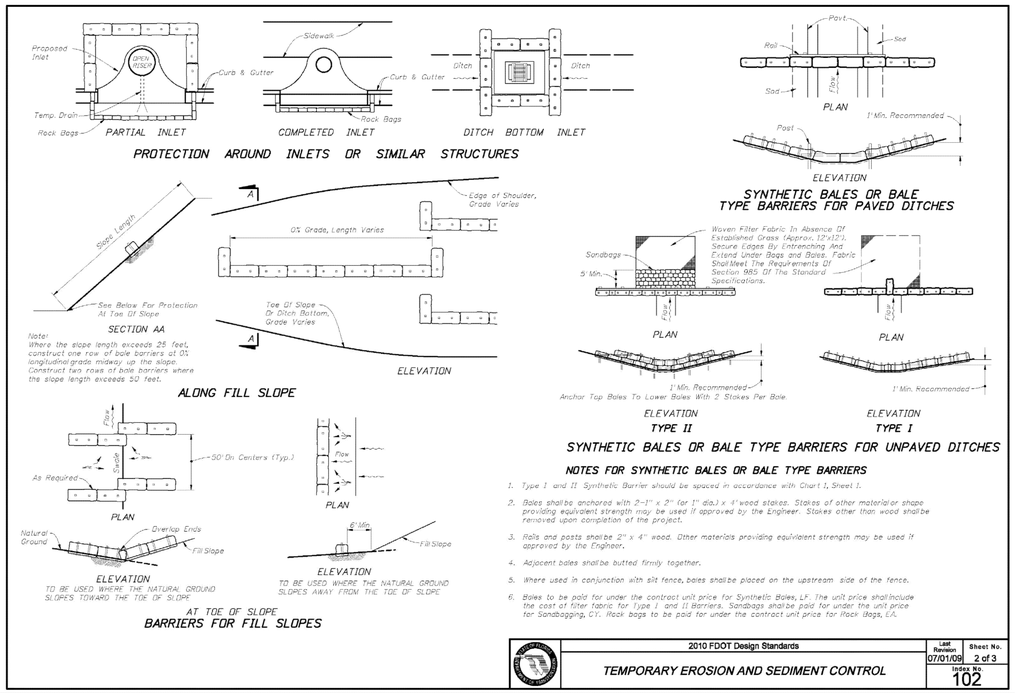

NOTES FOR SYNTHETIC BALES OR BALE TYPE BARRIERS

1. Type I and II Synthetic Barrier should be spaced in accordance with Chart 1, Sheet 1.
2. Bales shall be anchored with 2-1" x 2" (or 1" dia.) x 4' wood stakes. Stakes of other material or shape providing equivalent strength may be used if approved by the Engineer. Stakes other than wood shall be removed upon completion of the project.
3. Rails and posts shall be 2" x 4" wood. Other materials providing equivalent strength may be used if approved by the Engineer.
4. Adjacent bales shall be butted firmly together.
5. Where used in conjunction with silt fence, bales shall be placed on the upstream side of the fence.
6. Bales to be paid for under the contract unit price for Synthetic Bales, LF. The unit price shall include the cost of filter fabric for Type I and II Barriers. Sandbags shall be paid for under the unit price for Sandbagging, CY. Rock bags to be paid for under the contract unit price for Rock Bags, EA.

2010 FDOT Design Standards		Last Revision 07/01/09	Sheet No. 2 of 3
TEMPORARY EROSION AND SEDIMENT CONTROL			Index No. 102

THIS DRAWING AND THE DESIGN SHOWN ARE THE PROPERTY OF SPRING ENGINEERING, INC. AND ARE NOT TO BE REPRODUCED, COPIED, PUBLISHED, OR USED IN WHOLE OR PART WITHOUT WRITTEN CONSENT. THEY ARE TO BE USED ONLY FOR THE SITE AND PROJECT IDENTIFIED AND SHALL BE RETURNED UPON REQUEST.

100%
CONSTRUCTION DOCS.
ISSUE DATE: 02.10.16

REV	DATE	DESCRIPTION
REVISIONS		

YANCEY B. ABUTON
P.E. NO. 63766
DATE

PRISTINE LAKE PRESERVE
Ehren Cutoff and Parkway Blvd
Pasco County, Florida

CONTRACT DATE:
August 20, 2015

SPRING ENGINEERING, INC.
ENGINEERING • LAND PLANNING • ARCHITECTURE
3014 U.S. HWY 19, HOLIDAY, FL (727) 938-1516
FL COA NO. 00005158 & LICENSE NO. AA-C001747

NPDES NOTES AND DETAILS

DESIGNED BY: JAY
DRAWN BY: JAY
CHECKED BY: RPD
JOB NO.
2015-11

SHEET NO.
C3.3

ROADWAY PLAN & PROFILE-1

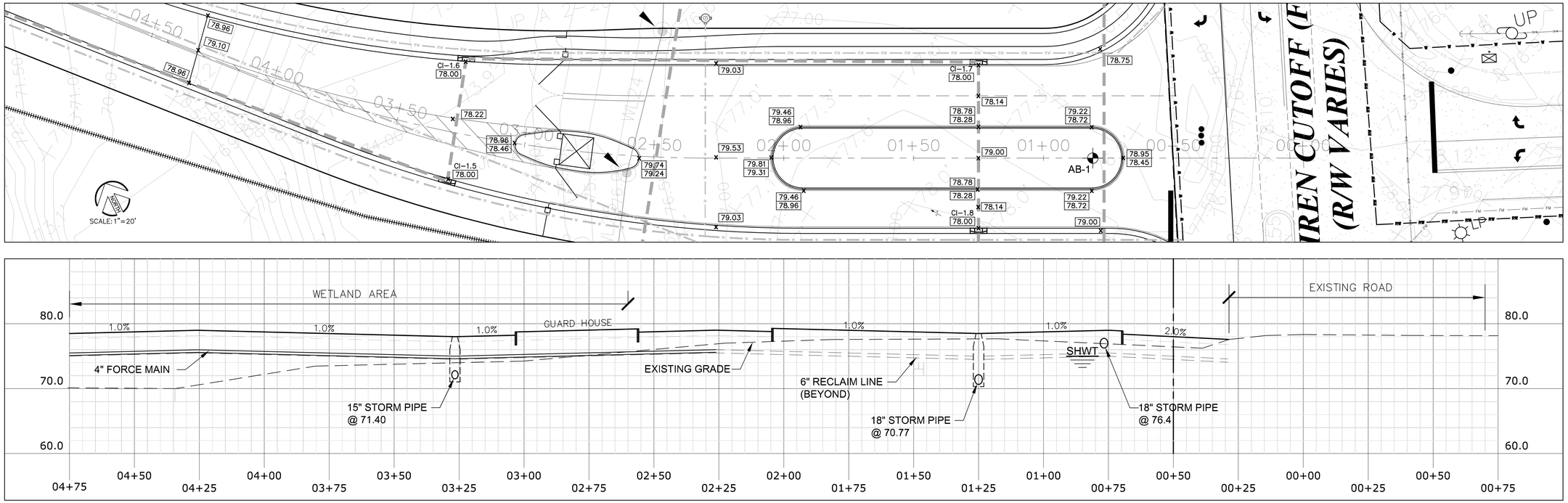

ROADWAY PLAN & PROFILE-2

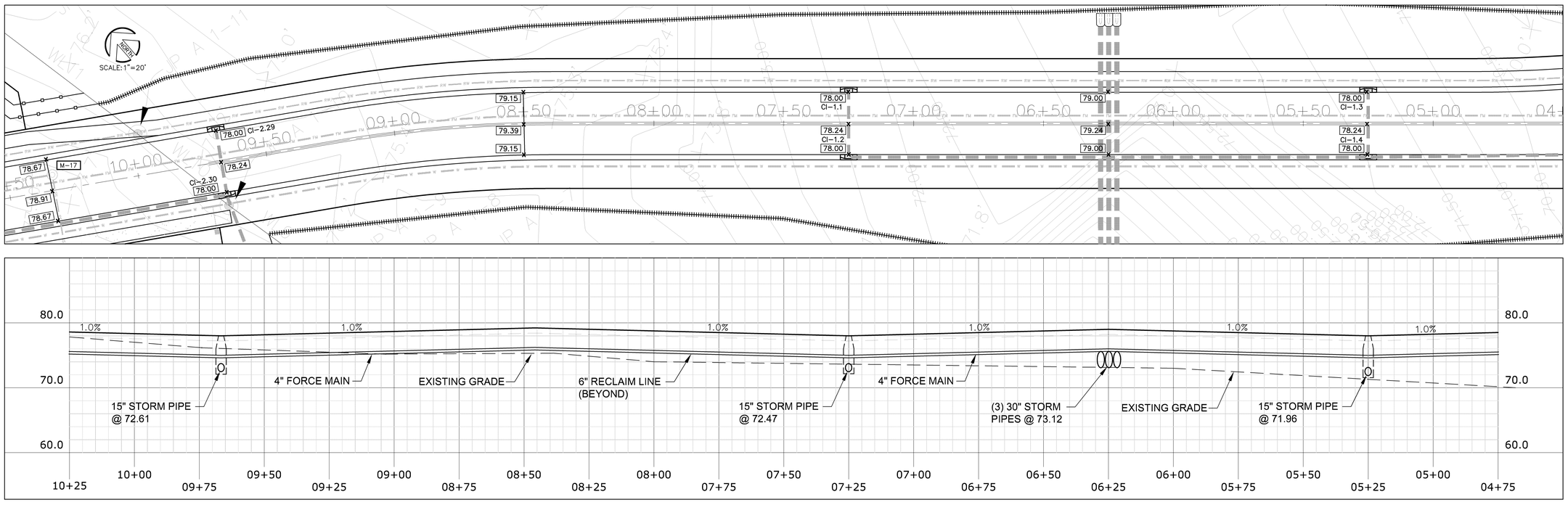

THIS DRAWING AND THE DESIGN SHOWN ARE THE PROPERTY OF SPRING ENGINEERING, INC. AND ARE NOT TO BE REPRODUCED, COPIED, PUBLISHED, OR USED IN WHOLE OR PART WITHOUT WRITTEN CONSENT. THEY ARE TO BE USED ONLY FOR THE SITE AND PROJECT IDENTIFIED AND SHALL BE RETURNED UPON REQUEST.

100%
CONSTRUCTION DOCS.
ISSUE DATE: 02.10.16

REVISIONS

REV	DATE	DESCRIPTION

YANCEY B. ABUTON
P.E. NO. 63766
DATE

PRISTINE LAKE PRESERVE

Ehren Cutoff and Parkway Blvd
Pasco County, Florida

CONTRACT DATE:
August 20, 2015

SPRING ENGINEERING, INC.
ENGINEERING • LAND PLANNING • ARCHITECTURE
3014 U.S. HWY 19, HOLIDAY, FL (727) 938-1516
FL COA NO. 00005158 & LICENSE NO. AA-C001747

PLAN AND PROFILE

DESIGNED BY: JAY
DRAWN BY: JAY
CHECKED BY: RPD
JOB NO.
2015-11
SHEET NO.
C3.4

ROADWAY PLAN & PROFILE-3

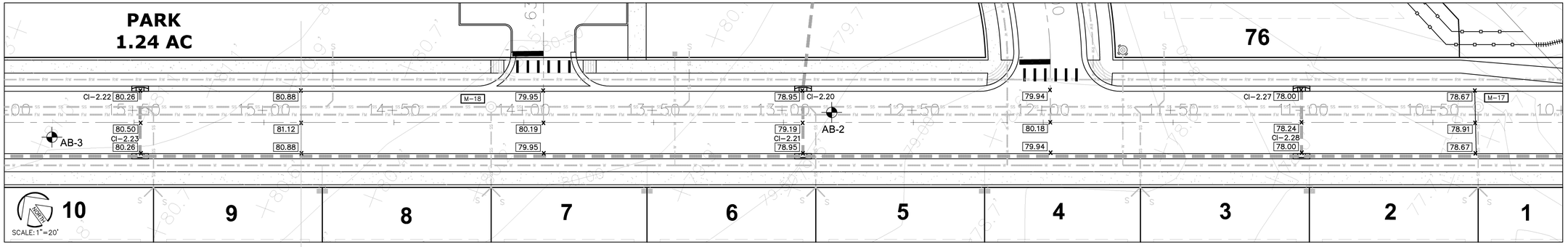

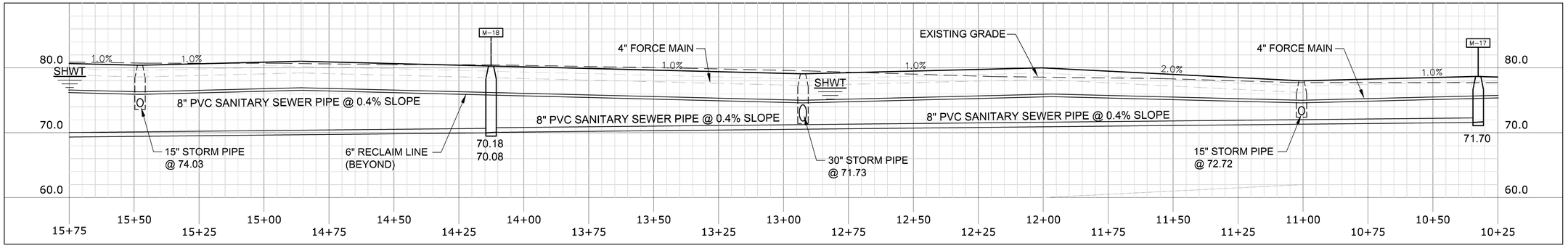

ROADWAY PLAN & PROFILE-4

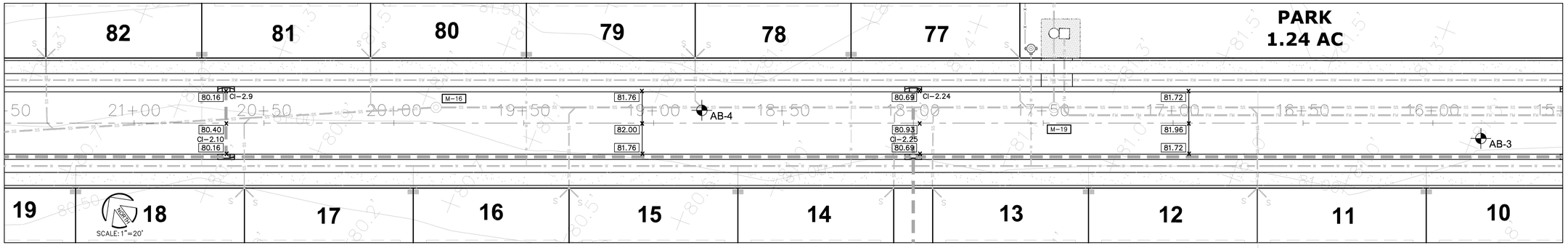

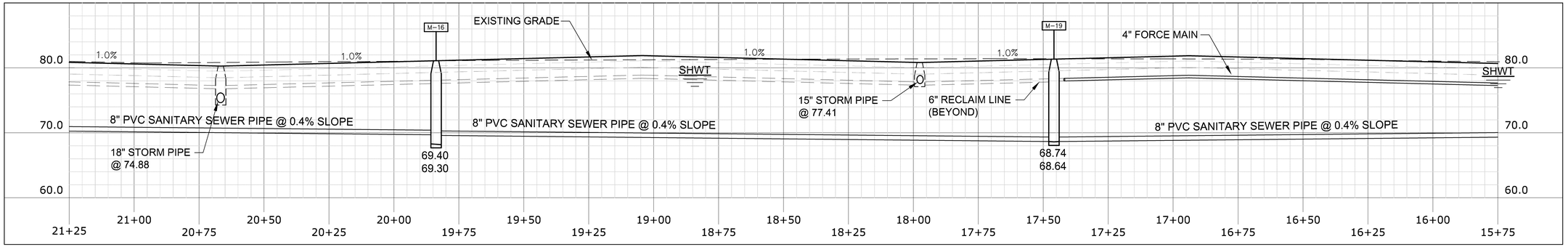

THIS DRAWING AND THE DESIGN SHOWN ARE THE PROPERTY OF SPRING ENGINEERING, INC. AND ARE NOT TO BE REPRODUCED, COPIED, PUBLISHED, OR USED IN WHOLE OR PART WITHOUT WRITTEN CONSENT. THEY ARE TO BE USED ONLY FOR THE SITE AND PROJECT IDENTIFIED AND SHALL BE RETURNED UPON REQUEST.

100%
CONSTRUCTION DOCS.
ISSUE DATE: 02.10.16

REVISIONS

REV	DATE	DESCRIPTION

YANCEY B. ABUTON
P.E. NO. 63786
DATE

PRISTINE LAKE PRESERVE

Ehren Cutoff and Parkway Blvd
Pasco County, Florida

CONTRACT DATE:
August 20, 2015

SPRING ENGINEERING, INC.
ENGINEERING • LAND PLANNING • ARCHITECTURE
3014 U.S. HWY 19, HOLIDAY, FL (727) 938-1516
FL COA NO. 00005158 & LICENSE NO. AA-C001747

PLAN AND PROFILE

DESIGNED BY: JAY
DRAWN BY: JAY
CHECKED BY: RPD

JOB NO.
2015-11

SHEET NO.
C3.5

ROADWAY PLAN & PROFILE-5

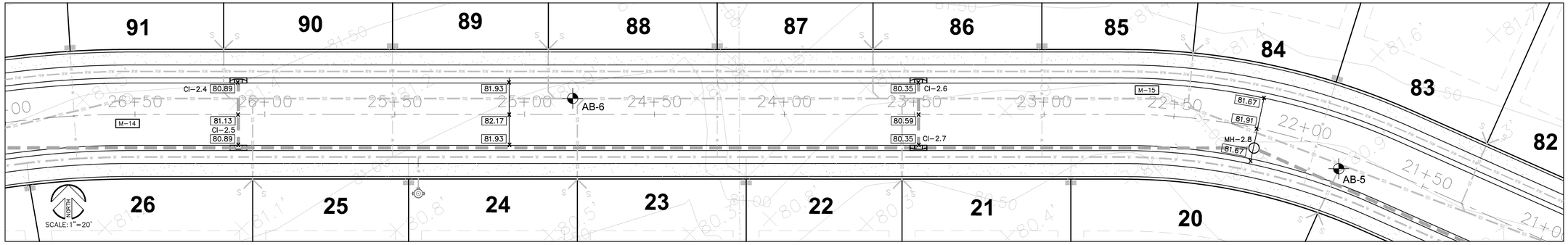

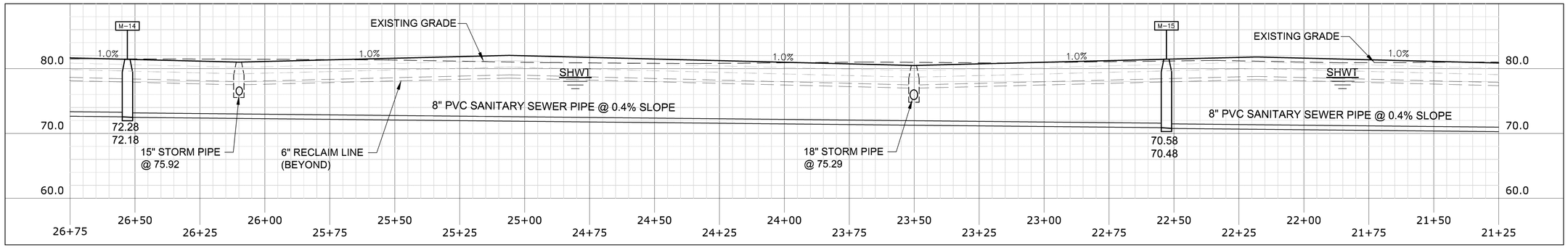

ROADWAY PLAN & PROFILE-6

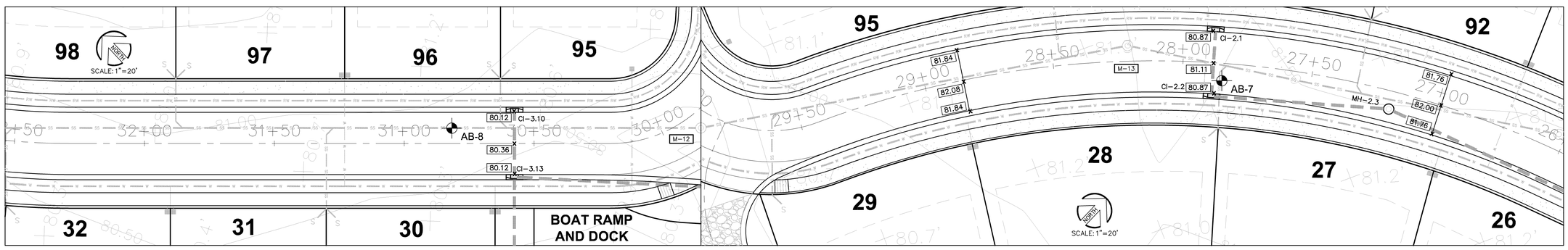

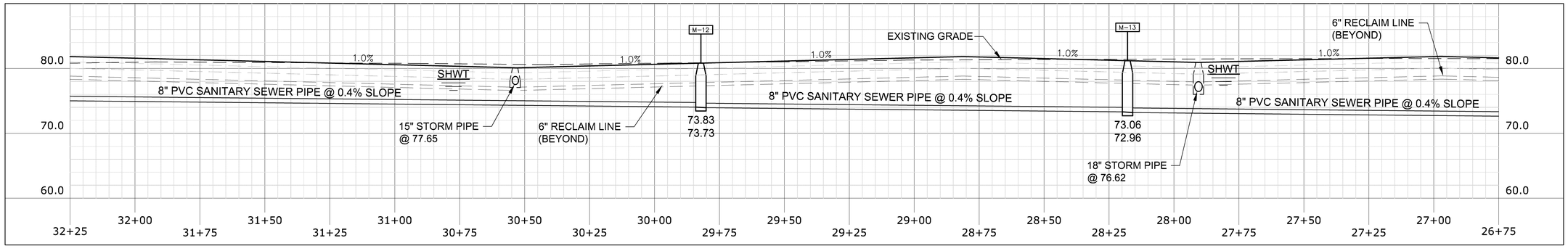

THIS DRAWING AND THE DESIGN SHOWN ARE THE PROPERTY OF SPRING ENGINEERING, INC. AND ARE NOT TO BE REPRODUCED, COPIED, PUBLISHED, OR USED IN WHOLE OR PART WITHOUT WRITTEN CONSENT. THEY ARE TO BE USED ONLY FOR THE SITE AND PROJECT IDENTIFIED AND SHALL BE RETURNED UPON REQUEST.

100%
CONSTRUCTION DOCS.
ISSUE DATE: 02.10.16

REVISIONS

REV	DATE	DESCRIPTION

YANCEY B. ABUTON
P.E. NO. 63766
DATE

PRISTINE LAKE PRESERVE

Ehren Cutoff and Parkway Blvd
Pasco County, Florida

CONTRACT DATE:
August 20, 2015

SPRING ENGINEERING, INC.
ENGINEERING • LAND PLANNING • ARCHITECTURE
3014 U.S. HWY 19, HOLIDAY, FL (727) 938-1516
FL COA NO. 00005158 & LICENSE NO. AA-C001747

PLAN AND PROFILE

DESIGNED BY: JAY
DRAWN BY: JAY
CHECKED BY: RPD

JOB NO.
2015-11

SHEET NO.
C3.6

ROADWAY PLAN & PROFILE-7

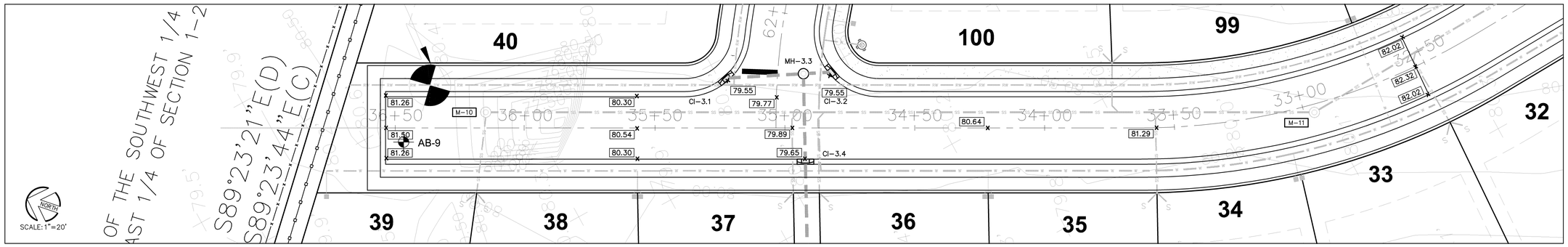

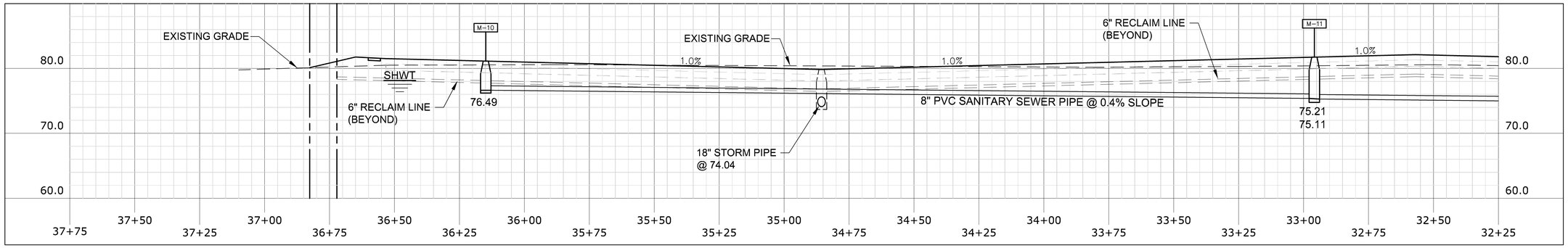

ROADWAY PLAN & PROFILE-8

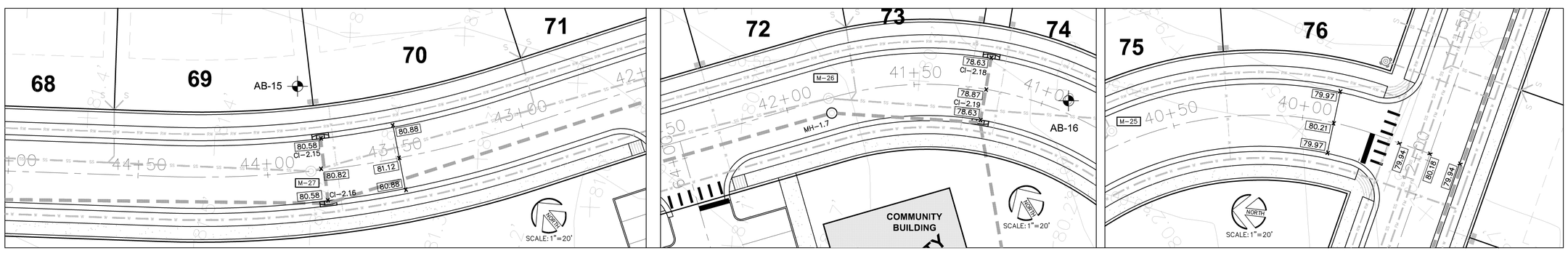

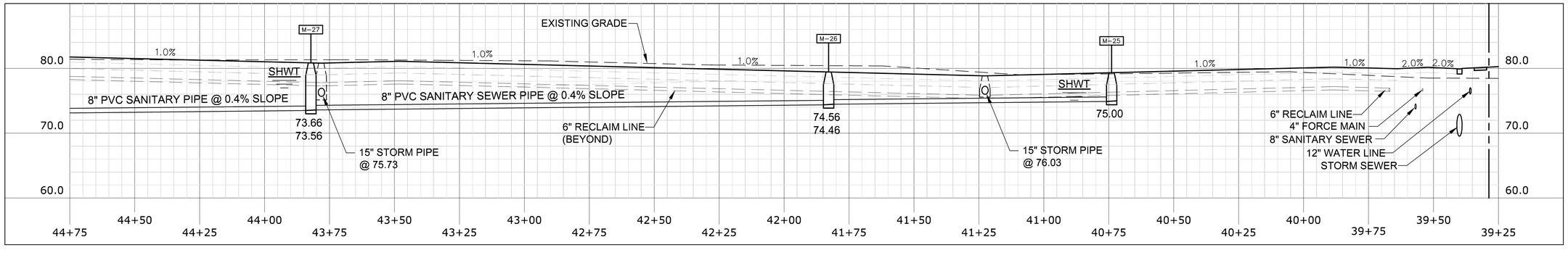

THIS DRAWING AND THE DESIGN SHOWN ARE THE PROPERTY OF SPRING ENGINEERING, INC. AND ARE NOT TO BE REPRODUCED, COPIED, PUBLISHED, OR USED IN WHOLE OR PART WITHOUT WRITTEN CONSENT. THEY ARE TO BE USED ONLY FOR THE SITE AND PROJECT IDENTIFIED AND SHALL BE RETURNED UPON REQUEST.

100%
CONSTRUCTION DOCS.
ISSUE DATE: 02.10.16

REVISIONS

REV	DATE	DESCRIPTION

YANCEY B. ABUTON
P.E. NO. 63766
DATE

PRISTINE LAKE PRESERVE

Ehren Cutoff and Parkway Blvd
Pasco County, Florida

CONTRACT DATE:
August 20, 2015

SPRING ENGINEERING, INC.
ENGINEERING • LAND PLANNING • ARCHITECTURE
3014 U.S. HWY 19, HOLIDAY, FL (727) 938-1516
FL COA NO. 00005158 & LICENSE NO. AR-C001747

PLAN AND PROFILE

DESIGNED BY: JAY
DRAWN BY: JAY
CHECKED BY: RPD
JOB NO.
2015-11
SHEET NO.
C3.7

ROADWAY PLAN & PROFILE-7

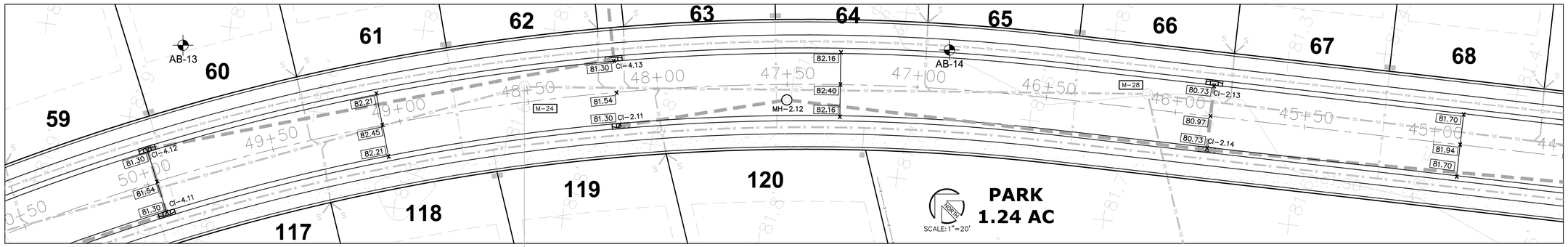

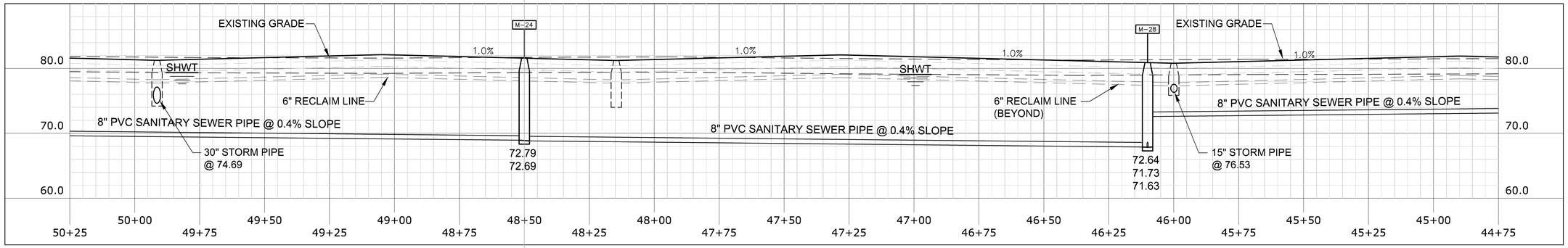

ROADWAY PLAN & PROFILE-8

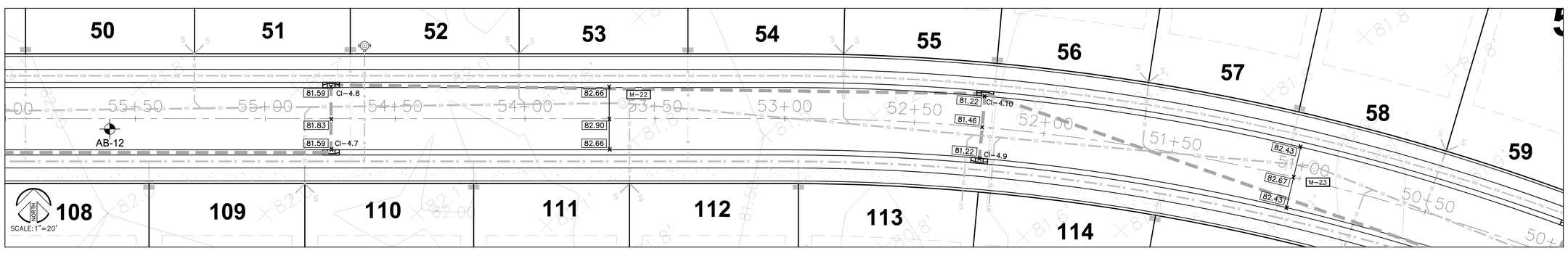

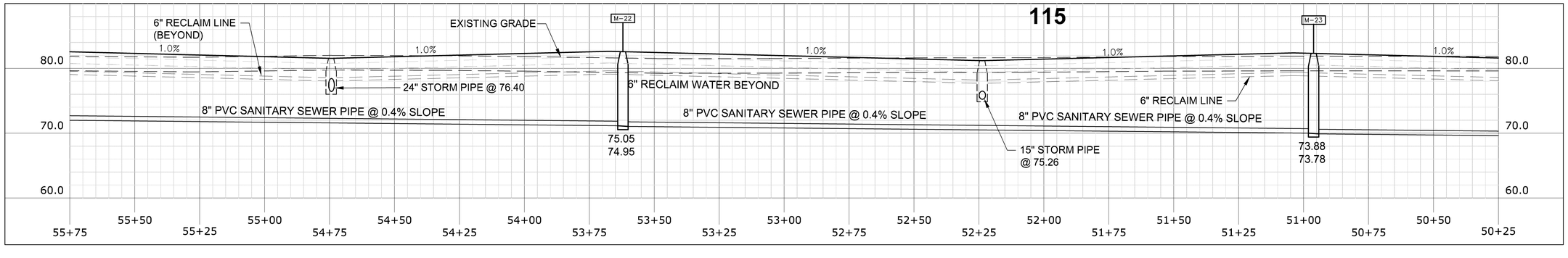

THIS DRAWING AND THE DESIGN SHOWN ARE THE PROPERTY OF SPRING ENGINEERING, INC. AND ARE NOT TO BE REPRODUCED, COPIED, PUBLISHED, OR USED IN WHOLE OR PART WITHOUT WRITTEN CONSENT. THEY ARE TO BE USED ONLY FOR THE SITE AND PROJECT IDENTIFIED AND SHALL BE RETURNED UPON REQUEST.

100%
CONSTRUCTION DOCS.
ISSUE DATE: 02.10.16

REVISIONS

REV	DATE	DESCRIPTION

YANCEY B. ABUTON
P.E. NO. 63766
DATE

PRISTINE LAKE PRESERVE

Ehren Cutoff and Parkway Blvd
Pasco County, Florida

CONTRACT DATE:
August 20, 2015

SPRING ENGINEERING, INC.
ENGINEERING • LAND PLANNING • ARCHITECTURE
3014 U.S. HWY 19, HOLIDAY, FL (727) 938-1516
FL COA NO. 00005158 & LICENSE NO. AR-C001747

PLAN AND PROFILE

DESIGNED BY: JAY
DRAWN BY: JAY
CHECKED BY: RPD
JOB NO.
2015-11
SHEET NO.
C3.8

ROADWAY PLAN & PROFILE-7

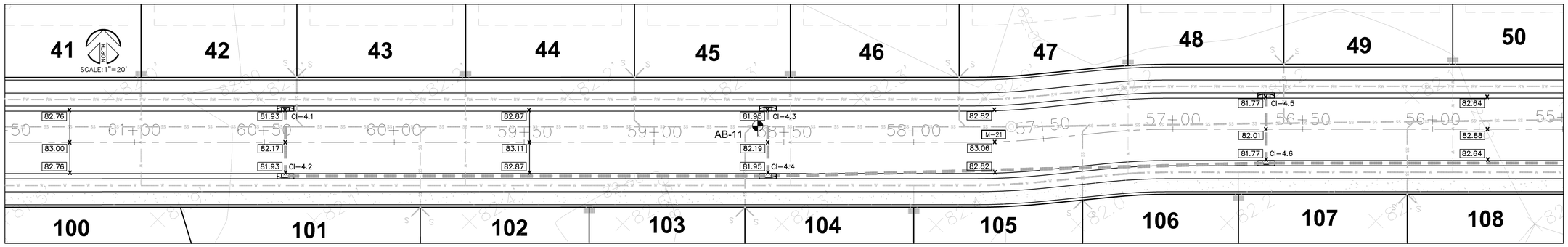

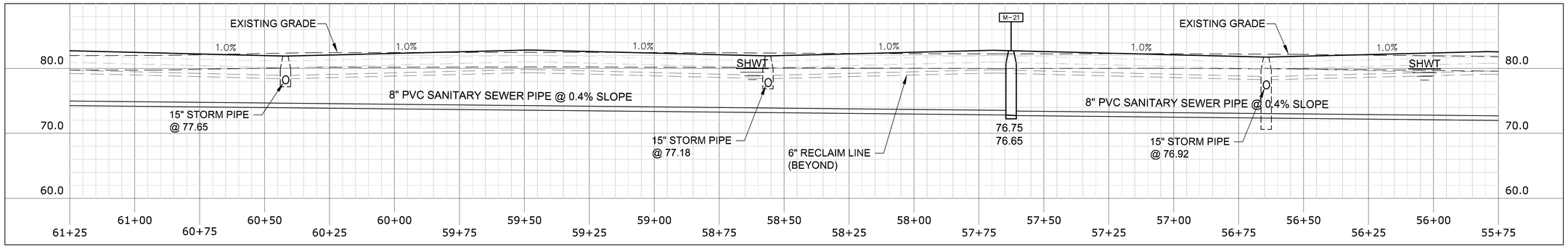

ROADWAY PLAN & PROFILE-8

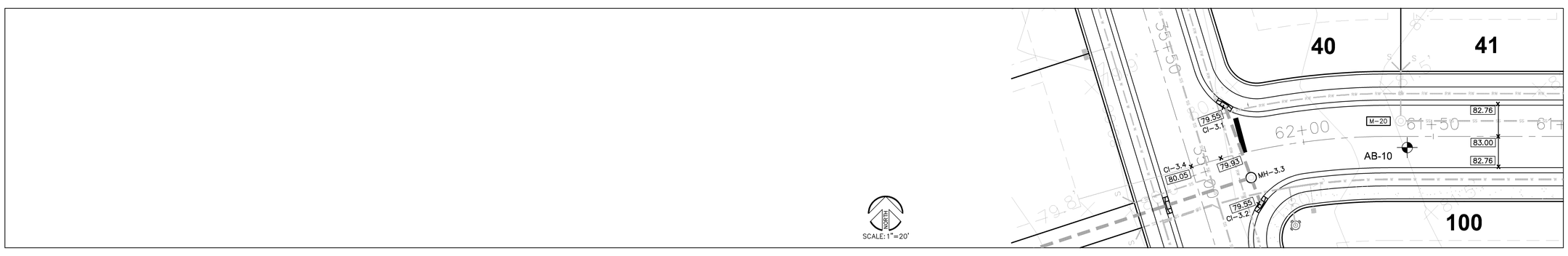

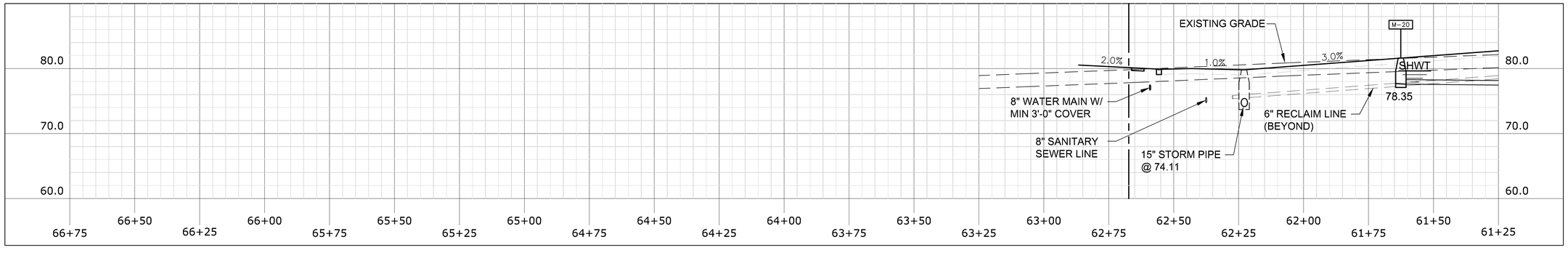

THIS DRAWING AND THE DESIGN SHOWN ARE THE PROPERTY OF SPRING ENGINEERING, INC. AND ARE NOT TO BE REPRODUCED, COPIED, PUBLISHED, OR USED IN WHOLE OR PART WITHOUT WRITTEN CONSENT. THEY ARE TO BE USED ONLY FOR THE SITE AND PROJECT IDENTIFIED AND SHALL BE RETURNED UPON REQUEST.

100%
CONSTRUCTION DOCS.
ISSUE DATE: 02.10.16

REVISIONS

REV	DATE	DESCRIPTION

YANCEY B. ABUTON
P.E. NO. 63766
DATE

PRISTINE LAKE PRESERVE

Ehren Cutoff and Parkway Blvd
Pasco County, Florida

CONTRACT DATE:
August 20, 2015

SPRING ENGINEERING, INC.
ENGINEERING • LAND PLANNING • ARCHITECTURE
3014 U.S. HWY 19, HOLIDAY, FL (727) 938-1516
FL COA NO. 00005158 & LICENSE NO. AR-C001747

PLAN AND PROFILE

DESIGNED BY: JAY
DRAWN BY: JAY
CHECKED BY: RPD

JOB NO.
2015-11

SHEET NO.
C3.9

UTILITY KEY NOTES

1. CONTRACTOR TO INSTALL NEW 4" PVC SANITARY SEWER LINE W/ MIN. SLOPE OF 2% FROM RESIDENCE TO 4"x4"x6" WYE CONNECTION PER DETAIL ON SHEET C4.2.
2. CONTRACTOR TO INSTALL NEW 6" PVC SANITARY SEWER LINE W/ MIN. SLOPE OF 1%, SEE PLAN FOR LENGTH AND INVERT ELEVATIONS.
3. CONTRACTOR TO INSTALL NEW 8" PVC SANITARY SEWER LINE W/ MIN. SLOPE OF 0.4%, SEE PLAN FOR LENGTH AND INVERT ELEVATIONS.
4. CONTRACTOR TO INSTALL NEW PUMP STATION PER DETAIL ON SHEET C4.3.
5. CONTRACTOR TO INSTALL NEW 4" FORCE MAIN.
6. CONTRACTOR TO DIRECTIONAL BORE ACROSS EHREN CUTOFF AND CONNECT TO EXISTING 12" FORCE MAIN.
7. CONTRACTOR SHALL INSTALL A TEMPORARY SERVICE-JUMPER AT THE POTABLE WATER POINT OF CONNECTION PER DETAIL ON SHEET C4.2.
8. CONTRACTOR TO VERIFY SIZE AND LOCATION W/ WATER COMPANY AND TAP EXISTING 12" WATER MAIN.
9. CONTRACTOR TO INSTALL NEW 12" PVC WATER MAIN AND 8" PVC WATER MAIN LOOP W/ 5/8"x 3/4" PRIVATE METER AT EACH UNIT.
10. CONTRACTOR TO INSTALL NEW 6" PVC RECLAIMED WATER MAIN W/ 1" STUB-OUT TO EACH UNIT. (STUB-OUT IS OVER SANITARY STUB-OUT, SEE DETAIL 21 ON SHEET C4.1)
11. CONTRACTOR TO TO INSTALL NEW FIRE HYDRANT PER DETAIL ON SHEET C4.1.
12. CONTRACTOR TO COORDINATE WITH POWER COMPANY AND INSTALL NEW UNDERGROUND ELECTRICAL SERVICE TO EACH RESIDENCE.
13. CONTRACTOR TO COORDINATE WITH PHONE COMPANY AND INSTALL NEW 4" ELECTRICAL CONDUIT FOR PHONE LINE FROM EXISTING PHONE BOX TO NEW BUILDING.
14. CONTRACTOR TO COORDINATE THE INSTALLATION OF NEW POLE MOUNTED SITE LIGHTING FIXTURES WITH ELECTRICAL COMPANY.
15. CONTRACTOR TO SUPPLY ELECTRICAL CONNECTION FOR NEW GATE AND ENTRY FEATURE.
16. CONTRACTOR TO DIRECTIONAL BORE ACROSS EHREN CUTOFF AND CONNECT TO EXISTING 24" DIP RECLAIM WATER MAIN.

PASCO COUNTY UTILITY NOTES

1. CONTRACTOR SHALL BE RESPONSIBLE FOR ALL REQUIRED TESTING.
2. CONTRACTOR SHALL COORDINATE WITH COUNTY PRIOR TO SUBMITTING BID.
3. CONTRACTOR IS TO FIELD VERIFY LOCATIONS OF ALL EXISTING UTILITIES AND CONTACT THE APPROPRIATE UTILITY COMPANIES PRIOR TO CONSTRUCTION.
4. ALL DISTURBED RIGHT-OF-WAY SHALL BE SODDED. CONTRACTOR TO NOTIFY PUBLIC WORKS 24 HOURS PRIOR TO BEGINNING ANY WORK IN THE COUNTY RIGHT-OF-WAY AND PRIOR TO PLACEMENT OF CONCRETE, ASPHALT OR SOD FOR GRADE VERIFICATIONS.
5. ANY TRENCHES THAT PASS WITHIN 20' OF THE TRUNK OF AN EXISTING TREE MUST BE HAND DUG AND ANY ROOTS OVER 1" IN DIAMETER MUST BE TRENCHED UNDER TO ALLOW THE ROOT TO REMAIN IN TACK.
6. ALL FIRE HYDRANTS MUST BE FLOW TESTED AND COLOR CODED BASED ON FLOW RESULTS.
7. ALL UTILITY MATERIAL AND WORKMANSHIP MUST COMPLY WITH STANDARDS FOR DESIGN AND CONSTRUCTION OF WATER, WASTEWATER AND RECLAIMED WATER FACILITIES SPECS. JUNE 1995 EDITION.
8. CONNECTIONS INTO EXISTING COUNTY-OWNED SYSTEM SHALL BE VIA WET TAP. WET TAPS SHALL BE PERFORMED BY PASCO COUNTY UTILITIES SERVICES BRANCH AT THE DEVELOPER'S EXPENSE. EXCAVATION, BACKFILL, AND SURFACE RESTORATION SHALL BE THE CONTRACTOR'S RESPONSIBILITY. MATERIAL FOR WET TAPS LARGER THAN TWO INCHES SHALL BE PROVIDED AND INSTALLED BY THE PROJECT CONTRACTOR.
9. THE PASCO COUNTY UTILITIES SERVICES BRANCH SHALL NOT OWN OR MAINTAIN WATER AND SEWER LINES OR FACILITIES ON-SITE.
10. THE SANITARY SEWER PLUGS SHALL BE INSTALLED AT THE BEGINNING OF CONSTRUCTION BY THE CONTRACTOR AND SHALL REMAIN IN PLACE UNTIL THE SYSTEM HAS BEEN CLEANED, INSPECTED AND APPROVED BY THE UTILITIES SERVICES BRANCH. WHEN THE SYSTEM HAS BEEN APPROVED, THE CONTRACTOR SHALL BE RESPONSIBLE FOR THE REMOVAL OF THE PLUGS.
11. ALL FIRE HYDRANTS SHALL BE INSTALL AND IN SERVICE PRIOR TO THE ACCUMULATION OF COMBUSTIBLES.

CONTRACTORS RESPONSIBILITIES

CONTRACTORS RESPONSIBILITIES REGARDING WET TAPS

-2" ONLY-THIS EXCAVATED TRENCH MUST BE DRY OR THE TRENCH WILL REQUIRE ROCK AND A PUMP TO BE IN PLACE. THE MINIMUM DISTANCE FROM THE FACE OF THE VALVE TO THE WALL OF THE TRENCH IS TO BE SIX FEET.

-3" AND LARGER-THE CONTRACTOR WILL SUPPLY A TAPPING SADDLE BEING EPOXY COATED, A TAPPIMG VALVE WITH MECHANICAL JOINT AND THE EQUIPMENT TO PROVIDE, AND CONDUCT A PREASURE TEST. COUNTY PERSONNEL WILL WITNESS THE PRESSURE TEST WHICH MUST BE AT LEAST 150 PSI FOR DURATION OF THIRTY MINUTES.

-THE CONTRACTOR IS RESPONSIBLE FOR THE EXCAVATION BEFOR ANY COUNTY PERSONNEL WILL ENTER A EXCAVATED AREA. IF THE TRENCH IS FOUR FEET IN DEPTH OR DEEPER, IT WILL REQUIRE A TRENCH BOX OR SLOPING, AND A LADDER ACCORDING TO OCCUPATIONAL SAFETY AND HEALTH ADMINISTRATION (OSHA) STANDARDS.

-THE TAPPING VALVE WILL REQUIRE A BLOCKING DEVICE MADE OF SUITABLE MATERIAL OR DEVICE. THIS BLOCKING DEVICE OR MATERIAL WILL BE PLACED UNDER THE VALVE AND REMAIN IN PLACE UNTIL THE TAP MACHINE IS REMOVED AND THE TAP IS COMPLETED.

-NOTE: IF THE CONTRACTOR HAS NOT FULFILLED HIS RESPONSIBILITIES, AS STATED ABOVE, PRIOR TO THE ARRIVAL OF PASCO COUNTY UTILITIES OPERATIONS AND MAINTENANCE TAPPING CREW, THERE WILL BE AN ADDITIONAL CHARGE OF $92.00.

SEWER MANHOLE TABLE

MANHOLE	INVERT ELEVATION				TOP
	NORTH	SOUTH	EAST	WEST	
M-10	–	76.49	–	–	80.76
M-11	75.21	75.11	–	–	81.75
M-12	73.83	–	73.73	–	80.99
M-13	–	–	72.96	73.06	81.31
M-14	–	–	72.18	72.28	81.41
M-15	–	–	70.48	70.58	81.44
M-16	–	–	69.30	69.40	81.06
M-17	–	–	–	71.70	78.79
M-18	–	–	70.18	70.08	80.27
M-19	68.64	–	68.74	68.74	81.30
M-20	–	–	78.35	–	81.91
M-21	–	–	76.65	76.75	82.94
M-22	–	–	74.95	75.05	82.78
M-23	–	–	73.78	73.88	82.45
M-24	–	–	72.69	72.79	81.80
M-25	–	–	–	75.00	79.25
M-26	–	–	74.56	74.46	79.32
M-27	–	–	73.66	73.56	80.80
M-28	–	71.63	72.64	71.73	81.10
PUMP STATION	70.79	68.53	–	–	82.75

UTILITY LEGEND

- SINGLE WATER METER ASSEMBLY, SEE DETAIL ON SHEET C4.1.
- DOUBLE WATER METER ASSEMBLY, SEE DETAIL ON SHEET C4.1.
- SINGLE SANITARY SEWER LATERAL, SEE DETAIL ON SHEET C4.1.
- DOUBLE SANITARY SEWER LATERAL, SEE DETAIL ON SHEET C4.1.
- SANITARY SEWER MANHOLE, SEE DETAIL ON SHEET C4.1.
- FM — SANITARY SEWER FORCE MAIN, SEE DETAIL ON SHEET C4.1.
- WM — WATER MAIN, SEE DETAIL ON SHEET C4.1.
- RW — RECLAIMED WATER MAIN, SEE DETAIL ON SHEET C4.1.
- FIRE HYDRANT ASSEMBLY, SEE DETAIL ON SHEET C4.1.

FIXTURE COUNT

RESIDENTIAL FIXTURE VALUE TOTAL	40 x 120 UNITS = 4,800
MINIMUM METER SIZE PER UNIT	5/8"x3/4"
FIRE HYDRANT W/ MIN. 1000 GPM	

UTILITIES

POTABLE WATER: SEWER: RECLAIMED:	PASCO COUNTY UTILITIES 7530 LITTLE ROAD NEW PORT RICHEY, FL 34654 GEORGEANN BENNETT (727) 847-8145
ELECTRICAL:	WITHLACOOCHEE RIVER ELECTRIC P.O. BOX 278 DADE CITY, FL 33526 COREY LITTLEFIELD (352) 588-5115 EXT. 1131
TELEPHONE:	VERIZON FLORIDA, INC. 1778 PARK AVE. NORTH, ST 200 MAITLAND, FLORIDA 32751 KARRIE SNYDER (407) 539-0644
FIRE RESCUE:	FIRE STATION 22 LAND O' LAKES 9930 LAND O' LAKES BLVD. LAND O' LAKES, FL 34639 (727) 861-3003

SITE CONTRACTOR RESPONSIBLE FOR INSTALLING ALL UTILITIES IN ACCORDANCE WITH COUNTY REQUIREMENTS, WHETHER SHOWN OR NOT. ALSO RESPONSIBLE FOR TESTING, IF REQUIRED. CHECK WITH COUNTY BEFORE SUBMITTING BID.

SITE LIGHTING IS TO BE PROVIDED BY WITHLACOOCHEE RIVER ELECTRIC. CONTRACTOR IS TO COORDINATE INSTALLATION OF SITE LIGHTING WITH POWER COMPANY.

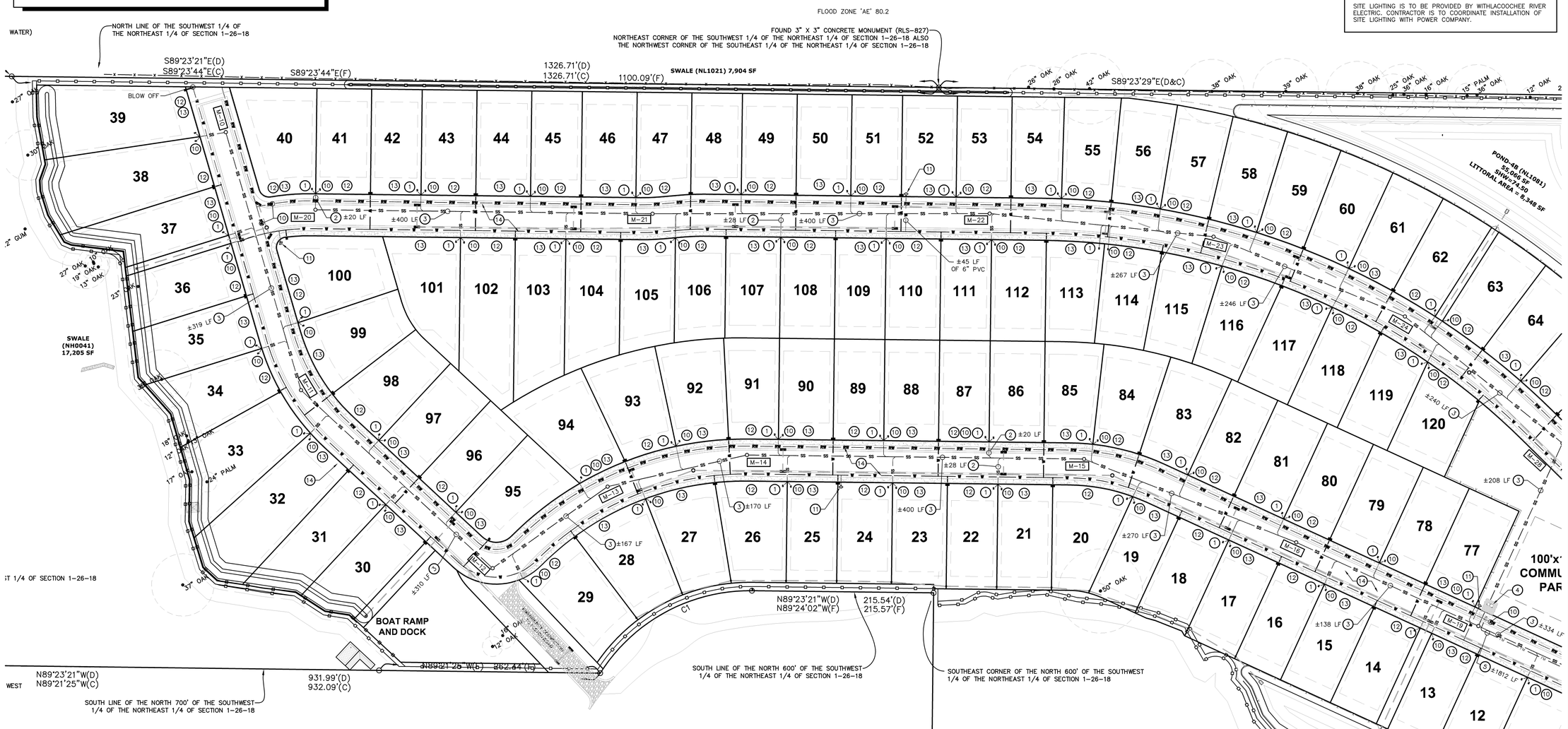

SECTION 01, TOWNSHIP 26 SOUTH, RANGE 18 EAST
SECTION 06, TOWNSHIP 26 SOUTH, RANGE 19 EAST
PASCO COUNTY, FLORIDA

NORTH

UTILITY PLAN
SCALE: 1"= 60'

60 30 0 60 120

THIS DRAWING AND THE DESIGN SHOWN ARE THE PROPERTY OF SPRING ENGINEERING, INC. AND ARE NOT TO BE REPRODUCED, COPIED, PUBLISHED, OR USED IN WHOLE OR PART WITHOUT WRITTEN CONSENT. THEY ARE TO BE USED ONLY FOR THE SITE AND PROJECT IDENTIFIED AND SHALL BE RETURNED UPON REQUEST.

100%
CONSTRUCTION DOCS.
ISSUE DATE: 02.10.16

REVISIONS

REV	DATE	DESCRIPTION

YANCEY B. ABUTON
P.E. NO. 63766
DATE

PRISTINE LAKE PRESERVE

Ehren Cutoff and Parkway Blvd
Pasco County, Florida

CONTRACT DATE:
August 20, 2015

SPRING ENGINEERING, INC.
ENGINEERING • LAND PLANNING • ARCHITECTURE
3014 U.S. HWY 19, HOLIDAY, FL (727) 938-1516
FL COA NO. 00005158 & LICENSE NO. AA-C001747

UTILITY PLAN

DESIGNED BY: JAY
DRAWN BY: JAY
CHECKED BY: RPD
JOB NO. 2015-11
SHEET NO. C4.0

SECTION 01, TOWNSHIP 26 SOUTH, RANGE 18 EAST
SECTION 06, TOWNSHIP 26 SOUTH, RANGE 19 EAST
PASCO COUNTY, FLORIDA

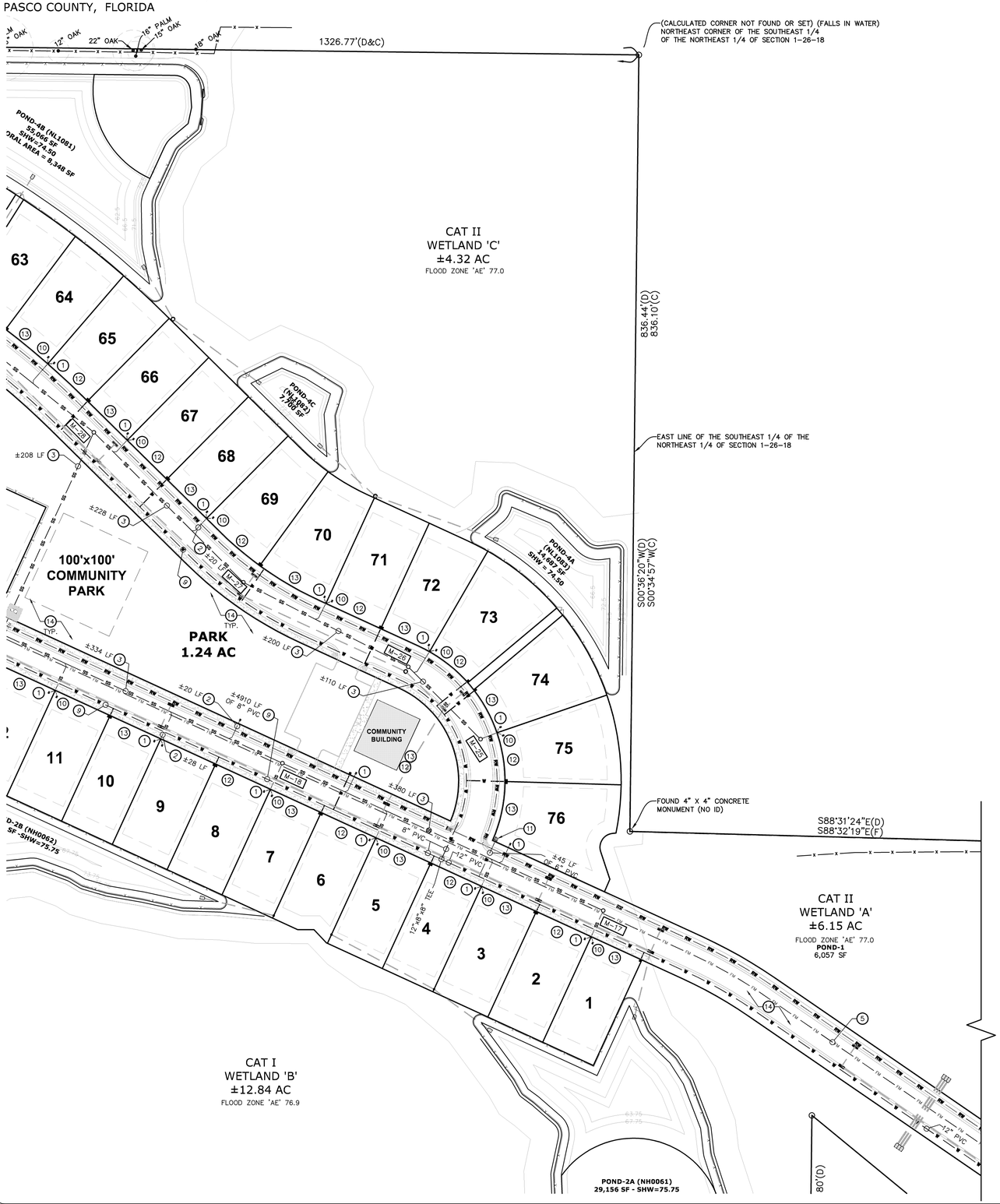

UTILITY LEGEND

- SINGLE WATER METER ASSEMBLY, SEE DETAIL ON SHEET C4.1.
- DOUBLE WATER METER ASSEMBLY, SEE DETAIL ON SHEET C4.1.
- SINGLE SANITARY SEWER LATERAL, SEE DETAIL ON SHEET C4.1.
- DOUBLE SANITARY SEWER LATERAL, SEE DETAIL ON SHEET C4.1.
- SANITARY SEWER MANHOLE, SEE DETAIL ON SHEET C4.1.
- FM — SANITARY SEWER FORCE MAIN, SEE DETAIL ON SHEET C4.1.
- WM — WATER MAIN, SEE DETAIL ON SHEET C4.1.
- RW — RECLAIMED WATER MAIN, SEE DETAIL ON SHEET C4.1.
- FIRE HYDRANT ASSEMBLY, SEE DETAIL ON SHEET C4.1.

SITE CONTRACTOR RESPONSIBLE FOR INSTALLING ALL UTILITIES IN ACCORDANCE WITH COUNTY REQUIREMENTS, WHETHER SHOWN OR NOT. ALSO RESPONSIBLE FOR TESTING, IF REQUIRED. CHECK WITH COUNTY BEFORE SUBMITTING BID.

SITE LIGHTING IS TO BE PROVIDED BY WITHLACOOCHEE RIVER ELECTRIC. CONTRACTOR IS TO COORDINATE INSTALLATION OF SITE LIGHTING WITH POWER COMPANY.

UTILITY KEY NOTES

1. CONTRACTOR TO INSTALL NEW 4" PVC SANITARY SEWER LINE W/ MIN. SLOPE OF 2% FROM RESIDENCE TO 4"x4"x6" WYE CONNECTION PER DETAIL ON SHEET C4.2.
2. CONTRACTOR TO INSTALL NEW 6" PVC SANITARY SEWER LINE W/ MIN. SLOPE OF 1%, SEE PLAN FOR LENGTH AND INVERT ELEVATIONS.
3. CONTRACTOR TO INSTALL NEW 8" PVC SANITARY SEWER LINE W/ MIN. SLOPE OF 0.45%, SEE PLAN FOR LENGTH AND INVERT ELEVATIONS.
4. CONTRACTOR TO INSTALL NEW PUMP STATION PER DETAIL ON SHEET C4.3.
5. CONTRACTOR TO INSTALL NEW 4" FORCE MAIN.
6. CONTRACTOR TO DIRECTIONAL BORE ACROSS EHREN CUTOFF AND CONNECT TO EXISTING 12" FORCE MAIN.
7. CONTRACTOR SHALL INSTALL A TEMPORARY SERVICE-JUMPER AT THE POTABLE WATER POINT OF CONNECTION PER DETAIL ON SHEET C4.2.
8. CONTRACTOR TO VERIFY SIZE AND LOCATION W/ WATER COMPANY AND TAP EXISTING 12" WATER MAIN.
9. CONTRACTOR TO INSTALL NEW 12" PVC WATER MAIN AND 8" PVC WATER MAIN LOOP W/ 5/8"x 3/4" PRIVATE METER AT EACH UNIT.
10. CONTRACTOR TO INSTALL NEW 6" PVC RECLAIMED WATER MAIN W/ 1" STUB-OUT TO EACH UNIT. (STUB-OUT IS OVER SANITARY STUB-OUT, SEE DETAIL 21 ON SHEET C4.1)
11. CONTRACTOR TO TO INSTALL NEW FIRE HYDRANT PER DETAIL ON SHEET C4.1.
12. CONTRACTOR TO COORDINATE WITH POWER COMPANY AND INSTALL NEW UNDERGROUND ELECTRICAL SERVICE TO EACH RESIDENCE.
13. CONTRACTOR TO COORDINATE WITH PHONE COMPANY AND INSTALL NEW 4" ELECTRICAL CONDUIT FOR PHONE LINE FROM EXISTING PHONE BOX TO NEW BUILDING.
14. CONTRACTOR TO COORDINATE THE INSTALLATION OF NEW POLE MOUNTED SITE LIGHTING FIXTURES WITH ELECTRICAL COMPANY.
15. CONTRACTOR TO SUPPLY ELECTRICAL CONNECTION FOR NEW GATE AND ENTRY FEATURE.
16. CONTRACTOR TO DIRECTIONAL BORE ACROSS EHREN CUTOFF AND CONNECT TO EXISTING 24" DIP RECLAIM WATER MAIN.

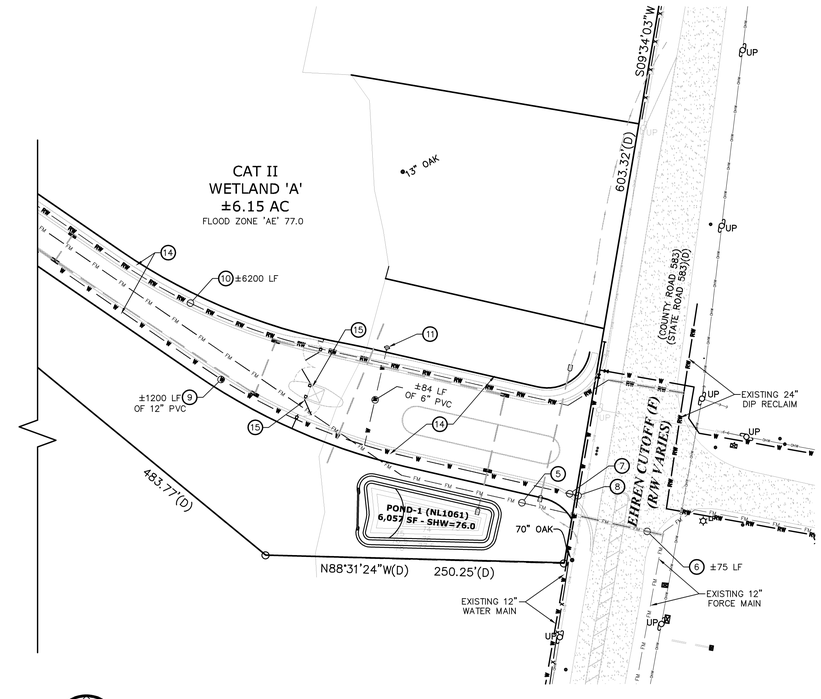

NORTH

UTILITY PLAN

SCALE: 1"= 50'

50 25 0 50 100

THIS DRAWING AND THE DESIGN SHOWN ARE THE PROPERTY OF SPRING ENGINEERING, INC. AND ARE NOT TO BE REPRODUCED, COPIED, PUBLISHED, OR USED IN WHOLE OR PART WITHOUT WRITTEN CONSENT. THEY ARE TO BE USED ONLY FOR THE SITE AND PROJECT IDENTIFIED AND SHALL BE RETURNED UPON REQUEST.

100%
CONSTRUCTION DOCS.
ISSUE DATE: 02.10.16

REVISIONS

REV	DATE	DESCRIPTION

YANCEY B. ABUTON
P.E. NO. 63766
DATE

PRISTINE LAKE PRESERVE

Ehren Cutoff and Parkway Blvd
Pasco County, Florida

CONTRACT DATE:
August 20, 2015

SPRING ENGINEERING, INC.
ENGINEERING • LAND PLANNING • ARCHITECTURE
3014 U.S. HWY 19, HOLIDAY, FL (727) 938-1516
FL COA NO. 00005158 & LICENSE NO. AA-C001747

UTILITY PLAN

DESIGNED BY: JAY
DRAWN BY: JAY
CHECKED BY: RPD

JOB NO.
2015-11

SHEET NO.
C4.1

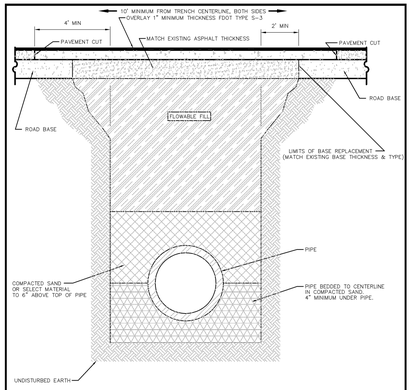

NOTE: –SELECT MATERIAL IS NATIVE SOIL EXCAVATED FROM THE TRENCH FREE OF ROCKS AND FOREIGN MATERIAL.
–COMPACTION TO TOP OF PILE IS TO BE APPROXIMATELY 90% STANDARD PROCTOR, AASHTO T-99.
–EXISTING CONCRETE/ASPHALT PAVEMENT SURFACE AND BASE TO BE CUT SQUARE WITH CONCRETE SAW.

NTS

CREATED 03/06/03 REVISED	PIPE LAYING CONDITIONS FLOWABLE FILL BACKFILL STANDARD EXISTING PAVED AREAS & ROADWAYS	PROVIDED FOR INFORMATIONAL PURPOSES ONLY. NO MODIFICATIONS WITHOUT WRITTEN PCU APPROVAL
	PASCO COUNTY UTILITIES	DETAIL 33

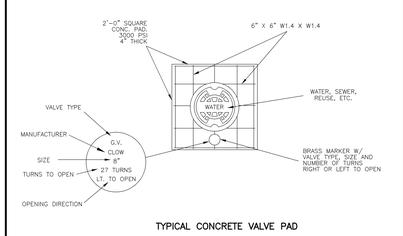

TYPICAL CONCRETE VALVE PAD

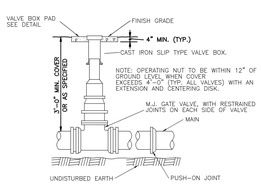

CREATED 02/24/03 REVISED	VALVE BOX DETAIL SLIP TYPE	PROVIDED FOR INFORMATIONAL PURPOSES ONLY. NO MODIFICATIONS WITHOUT WRITTEN PCU APPROVAL
	PASCO COUNTY UTILITIES	DETAIL 27

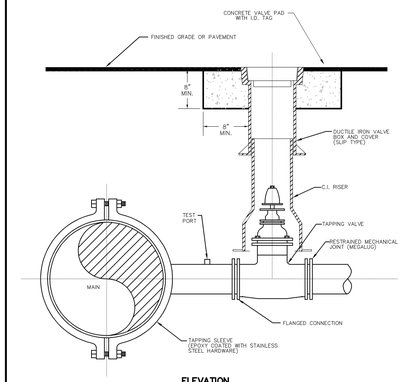

ELEVATION

NOTES:
– SADDLE CONNECTION WILL BE TESTED TO 150 PSI PRIOR TO TAPPING MAIN.
– MECHANICAL JOINTS/UNDERGROUND PIPING SHALL BE RESTRAINED AS SPECIFIED BY COUNTY/ENGINEER.
– VALVE EXTENSION ROD SHALL BE UTILIZED, AS NECESSARY, SO THAT VALVE OPERATING NUT IS A MAXIMUM OF 3' BELOW GRADE.

CREATED 02/24/03 REVISED	WATER, REUSE, AND FORCE MAIN TAPPING DETAIL W/ VALVE LOCATION	PROVIDED FOR INFORMATIONAL PURPOSES ONLY. NO MODIFICATIONS WITHOUT WRITTEN PCU APPROVAL
	PASCO COUNTY UTILITIES	DETAIL 34

PIPE RESTRAINT LENGTHS IN FEET COMMON FITTINGS

WATER MAINS - TEST PRESSURE 150 PSI						
		FITTING TYPE				
		11-1/4°	22-1/2°	45°	90°	DEAD END
PIPE SIZE	4"	2'	4'	8'	20'	45'
	6"	3'	6'	12'	28'	63'
	8"	4'	7'	15'	36'	82'
	10"	4'	9'	18'	43'	98'
	12"	5'	10'	21'	50'	116'
	16"	6'	13'	26'	63'	148'
	20"	7'	15'	31'	76'	179'
	24"	9'	17'	36'	87'	208'

FORCE MAINS - TEST PRESSURE 100 PSI						
		FITTING TYPE				
		11-1/4°	22-1/2°	45°	90°	DEAD END
PIPE SIZE	4"	1'	3'	6'	13'	30'
	6"	2'	4'	8'	19'	42'
	8"	2'	5'	10'	24'	55'
	10"	3'	6'	12'	29'	66'
	12"	3'	7'	14'	34'	77'
	16"	4'	8'	18'	42'	99'
	20"	5'	10'	21'	50'	119'
	24"	6'	11'	24'	58'	139'

RESTRAINT LENGTHS ARE MEASURED FROM THE CENTER LINE OF THE FITTING ALONG THE PIPE IN BOTH DIRECTIONS (EXCEPT DEAD ENDS).

CREATED 02/24/03 REVISED	RESTRAINED JOINT TABLE COMMON FITTINGS	PROVIDED FOR INFORMATIONAL PURPOSES ONLY. NO MODIFICATIONS WITHOUT WRITTEN PCU APPROVAL
	PASCO COUNTY UTILITIES	DETAIL 28

PIPE RESTRAINT LENGTHS IN FEET TEES (BRANCH SIDE)

WATER MAINS - TEST PRESSURE 150 PSI									
		BRANCH SIZE							
		3"	4"	6"	8"	10"	12"	16"	20"	24"
RUN SIZE	3"	6'	14'	30'	—	—	—	—	—	—
	4"	2'	11'	28'	44'	—	—	—	—	—
	6"	1'	2'	22'	40'	52'	—	—	—	—
	8"	1'	1'	16'	35'	48'	62'	—	—	—
	10"	1'	1'	10'	30'	44'	58'	83'	—	—
	12"	1'	1'	3'	25'	40'	55'	80'	103'	—
	16"	1'	1'	1'	14'	31'	48'	75'	98'	119'
	20"	1'	1'	1'	2'	22'	40'	69'	94'	116'
	24"	1'	1'	1'	1'	11'	31'	63'	89'	111'

RESTRAINT LENGTHS ARE MEASURED FROM THE CENTER LINE OF THE TEE ALONG THE BRANCH FOR THE DISTANCE INDICATED. A MINIMUM OF 5 FEET OF RESTRAINED PIPE MUST BE INSTALLED ON BOTH RUNS OF THE TEE. MEGALUG TYPE RESTRAINERS ARE REQUIRED ON ALL JOINTS.

CREATED 02/24/03 REVISED	RESTRAINED JOINT TABLE TEES (BRANCH SIDE)	PROVIDED FOR INFORMATIONAL PURPOSES ONLY. NO MODIFICATIONS WITHOUT WRITTEN PCU APPROVAL
	PASCO COUNTY UTILITIES	DETAIL 29

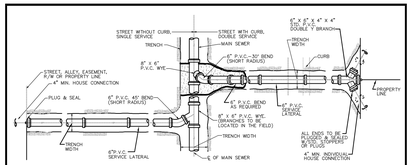

PLAN

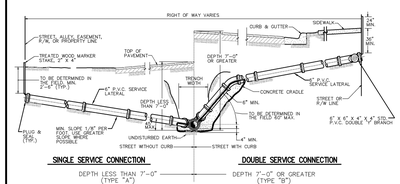

SINGLE SERVICE CONNECTION — DEPTH LESS THAN 7'-0" (TYPE "A")

DOUBLE SERVICE CONNECTION — DEPTH 7'-0" OR GREATER (TYPE "B")

SECTION

NOTE:
– CONTRACTOR SHALL MAKE, ON A CLEAN SET OF PLANS, THE FINAL STATIONING OR DISTANCE AND DIRECTION FROM MANHOLE OF EACH SERVICE LATERAL AND THEN GIVE TO ENGINEER FOR RECORD PURPOSES.
– PROVIDE 2" x 4" PRESSURE TREATED WOOD MARKER STAKE AT ALL SANITARY SERVICES (INCLUDE IN PIPE PRICE). TOP 3' STAKE TO BE PAINTED WITH GREEN PAINT.
– THE MINIMUM DIAMETER OF ALL SERVICE LATERALS SHALL BE 6 INCHES.

CREATED 02/24/03 REVISED	SEWER LATERAL CONNECTION	PROVIDED FOR INFORMATIONAL PURPOSES ONLY. NO MODIFICATIONS WITHOUT WRITTEN PCU APPROVAL
	PASCO COUNTY UTILITIES	DETAIL 41

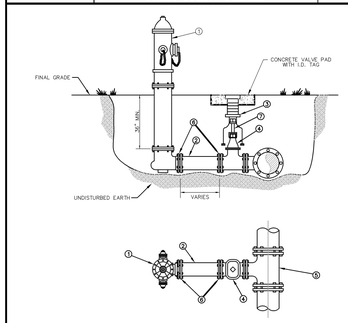

MATERIALS		
ITEM	QUANT.	DESCRIPTION
1	1	HYDRANT, FIRE (5 1/4" VALVE MIN.), PAINTED YELLOW
2	*	6" PIPE, P.V.C. (DR-18)
3	1	BOX, VALVE SLIP TYPE
4	1	6" VALVE, GATE, M.J. RESILIENT WEDGE
5	1	TEE, ANCHORING, M.J.
6	*	6" RESTRAINER GLAND (MEGALUG)
7	*	VALVE EXTENSION ROD, AS NECESSARY (3' MAX. BELOW GRADE)

CREATED 02/24/03 REVISED	FIRE HYDRANT PERPENDICULAR TO THE MAIN	PROVIDED FOR INFORMATIONAL PURPOSES ONLY. NO MODIFICATIONS WITHOUT WRITTEN PCU APPROVAL
	PASCO COUNTY UTILITIES	DETAIL 24

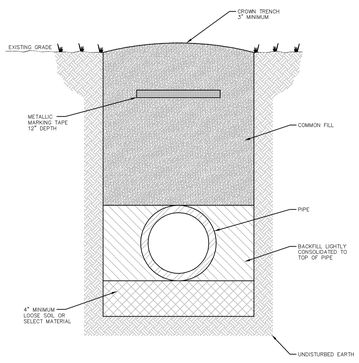

NOTES: –LOOSE SOIL OR SELECT MATERIAL IS NATIVE SOIL EXCAVATED FROM THE TRENCH FREE OF ROCKS AND FOREIGN MATERIAL.
–COMMON FILL TO BE PLACED AND COMPACTED IN 12" LAYERS. ROLLING EQUIPMENT SHALL NOT BE USED FOR COMPACTION UNTIL A MINIMUM OF 18" OF COMMON FILL HAS BEEN PLACED AND COMPACTED OVER THE PIPE. THREE FEET OF FILL SHALL BE PLACED BEFORE A HYDROHAMMER MAY BE USED FOR COMPACTION.

NTS

CREATED 02/24/03 REVISED	PIPE LAYING CONDITIONS STANDARD UNPAVED AREAS	PROVIDED FOR INFORMATIONAL PURPOSES ONLY. NO MODIFICATIONS WITHOUT WRITTEN PCU APPROVAL
	PASCO COUNTY UTILITIES	DETAIL 32

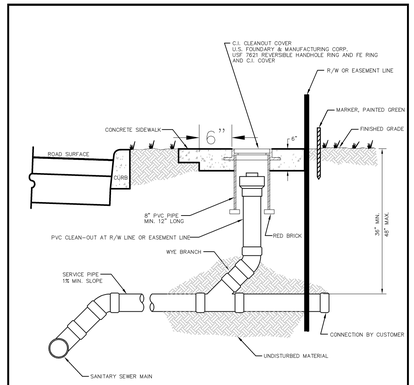

NTS

CREATED 02/24/03 REVISED	SANITARY SEWER – SINGLE WYE CONNECTION AND TYPICAL CLEAN-OUT	PROVIDED FOR INFORMATIONAL PURPOSES ONLY. NO MODIFICATIONS WITHOUT WRITTEN PCU APPROVAL
	PASCO COUNTY UTILITIES	DETAIL 42

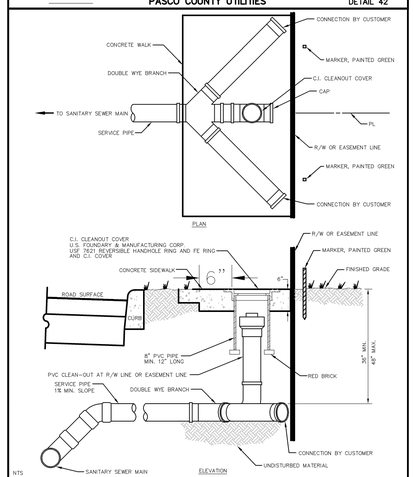

NTS

CREATED 02/24/03 REVISED	SANITARY SEWER – DOUBLE WYE CONNECTION AND TYPICAL CLEAN-OUT	PROVIDED FOR INFORMATIONAL PURPOSES ONLY. NO MODIFICATIONS WITHOUT WRITTEN PCU APPROVAL
	PASCO COUNTY UTILITIES	DETAIL 43

NOTE:
PRECAST CONCRETE SHALL ATTAIN A MINIMUM COMPRESSIVE STRENGTH OF 4,000 p.s.i. AT 28 DAYS.

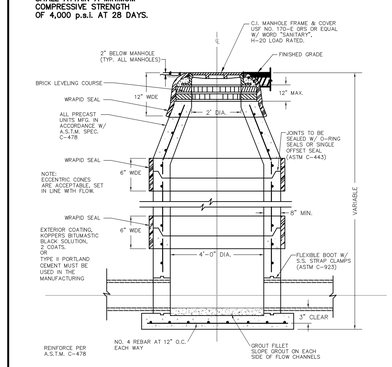

NOTE: 1. WRAPID SEAL MUST BE USED ON ALL JOINTS, CASTINGS AND RISER RINGS. ON ALL JOINTS ON AIR RELEASES, MANHOLES, GREASE/WATER, OIL/WATER SEPARATORS, AND WETWELLS.
2. WRAPID SEAL MUST BE USED IN ACCORDANCE WITH MANUFACTURES RECOMMENDATIONS.
3. PASCO COUNTY SHALL HAVE THE OPTION OF SPECIFYING THE TYPE OF INTERIOR LINING TO BE INSTALLED FOR EACH INDIVIDUAL MANHOLE.
4. PASCO COUNTY SHALL HAVE THE OPTION OF REQUIRING A NEGATIVE PRESSURE TEST PER ASTM C-1244
5. LIFT HOLES MUST NOT PENETRATE THE WALLS

CREATED 02/24/03 REVISED	STANDARD MANHOLE	PROVIDED FOR INFORMATIONAL PURPOSES ONLY. NO MODIFICATIONS WITHOUT WRITTEN PCU APPROVAL
	PASCO COUNTY UTILITIES	DETAIL 38

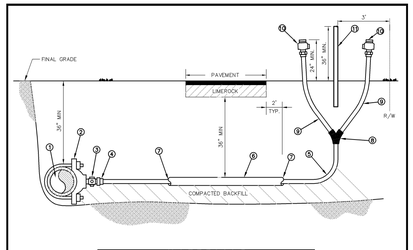

MATERIALS		
ITEM	QUANT.	DESCRIPTION
1	*	PIPE, PVC (DR-18) OR D.I.P.
2	1	SADDLE, SERVICE W/ 1" F.I.P. THREAD
3	1	1" CORPORATION (M.I.P. x COMP.)
4	1	1" INSERT (STAINLESS STEEL)
5	*	1" TUBING, POLYETHYLENE
6	*	3" CASING, PVC OR HDPE – 2' BEYOND EDGE PAVEMENT
7	*	SEALER, RAM-NEK
8	1	WYE BRANCH FOR POLY TUBING
9	2	3/4" WATER OR 1" REUSE TUBING, POLYETHYLENE 4'
10	2	3/4" WATER OR 1" REUSE CURB STOP BALL
–	–	VALVE W/ LOCK WINGS (F.I.P. x COMP.)
11	1	2" x 4" P.T. MARKER STAKE

NOTES: – ALL FITTINGS FOR POLYETHYLENE TUBING ARE BRASS COMPRESSION TYPE.
– A VALVE BOX MAY BE REQUIRED AS SPECIFIED BY THE ENGINEER.
– CURB STOP TO TERMINATE 24" ABOVE GROUND AT R/W LINE.
– REUSE CURB STOPS = 1" / WATER CURB STOPS = 3/4"
– TUBING TO BE YARDLEY 3406 OR EQUAL.
– SADDLES 2" – 3" TO BE BRASS FULL CIRCLE TYPE.
– SADDLES 4" AND LARGER TO BE D.I. DUAL STRAP TYPE.
– CURB STOPS TO BE BED TO MARKER STAKE.
– SADDLE MAY BE INSTALLED AT ANGLE (WITHIN 45° OF HORIZONTAL).
– MARKER STAKES PAINTED SAFETY BLUE FOR WATER, PURPLE FOR REUSE.

CREATED 02/24/03 REVISED	WATER AND REUSE LATERAL SERVICE 3/4" (DOUBLE – FAR SIDE) POLYETHYLENE TUBING	PROVIDED FOR INFORMATIONAL PURPOSES ONLY. NO MODIFICATIONS WITHOUT WRITTEN PCU APPROVAL
	PASCO COUNTY UTILITIES	DETAIL 19

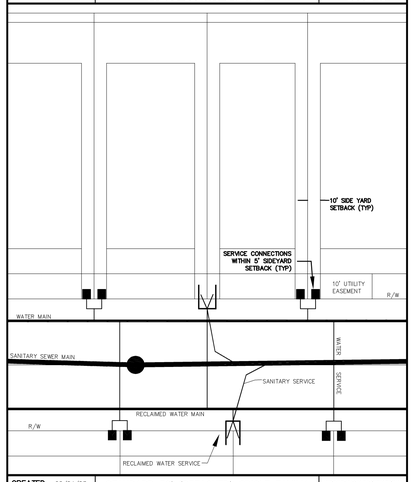

CREATED 02/24/03 REVISED	STANDARD 30' (DETACHED) SINGLE FAMILY TYPICAL UTILITY CONNECTION DETAIL	PROVIDED FOR INFORMATIONAL PURPOSES ONLY. NO MODIFICATIONS WITHOUT WRITTEN PCU APPROVAL
	PASCO COUNTY UTILITIES	DETAIL 21

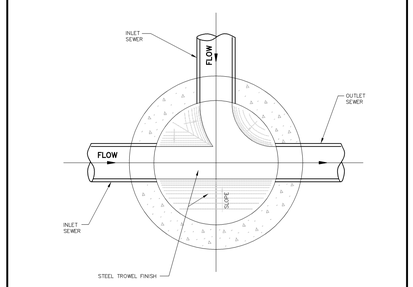

CREATED 02/24/03 REVISED	STANDARD MANHOLE (BENCH AND INVERTS)	PROVIDED FOR INFORMATIONAL PURPOSES ONLY. NO MODIFICATIONS WITHOUT WRITTEN PCU APPROVAL
	PASCO COUNTY UTILITIES	DETAIL 36

THIS DRAWING AND THE DESIGN SHOWN ARE THE PROPERTY OF SPRING ENGINEERING, INC. AND ARE NOT TO BE REPRODUCED, COPIED, PUBLISHED, OR USED IN WHOLE OR PART WITHOUT WRITTEN CONSENT. THEY ARE TO BE USED ONLY FOR THE SITE AND PROJECT IDENTIFIED AND SHALL BE RETURNED UPON REQUEST.

100%
CONSTRUCTION DOCS.
ISSUE DATE: 02.10.16

REVISIONS

REV	DATE	DESCRIPTION

"NOT VALID WITHOUT SIGNATURE AND ORIGINAL SEAL OF FLORIDA LICENSED PROFESSIONAL ENGINEER"
YANCEY B. ABUTON
P.E. NO. 63766
DATE

PRISTINE LAKE PRESERVE

Ehren Cutoff and Parkway Blvd
Pasco County, Florida

CONTRACT DATE:
August 20, 2015

SPRING ENGINEERING, INC.
ENGINEERING • LAND PLANNING • ARCHITECTURE
3014 U.S. HWY 19, HOLIDAY, FL (727) 938-1516
FL COA NO. 00005158 & LICENSE NO. AA-C001747

UTILITY DETAILS

DESIGNED BY: JAY
DRAWN BY: JAY
CHECKED BY: RPD
JOB NO.
2015-11

SHEET NO.
C4.2

PUMP SPECIFICATION

PUMP DESIGN

The pump(s) shall be capable of handling raw unscreened sewage, storm water, and other similar solids-laden fluids without clogging. The discharge base and elbow shall be permanently installed in the wet well and connected to the discharge piping. In order to prevent binding or separation of the pump from the guide rail system, the pump(s) shall connect to the guide rail base automatically and firmly, guided by one guide bar (two bars optional) extending from the top of the station to the discharge base elbow. Systems using guide cable in lieu of rigid guide bars or pipes shall not be considered acceptable. The sliding guide bracket shall be a separate part of the pumping unit, capable of being attached to standard ANSI or DIN pump flanges so that the base is interchangeable with other pumps and not limited to a specific pump. Non standard flange dimensions shall not be considered acceptable. There shall be no need for personnel to enter the wet well to remove or reinstall the pump(s). A field replaceable Nitrile rubber profile gasket or o-ring shall accomplish positive sealing of the pump flange/guide rail bracket to the discharge elbow. Metal to metal contact between the pump and discharge base elbow as a means of sealing shall not be considered acceptable. No portion of the pump shall bear directly on the floor of the sump. The guide rail system shall be available in an optional non-sparking version, approved by Factory Mutual for use in NEC Class 1, Division 1, Group C&D hazardous locations

PUMP CONSTRUCTION

Major pump components shall be of gray cast iron, ASTM A-48, Class 40, with smooth surfaces devoid of porosity or other irregularities. All exposed nuts and bolts shall be AISI type 316 stainless steel construction. All metal surfaces coming into contact with the pumped media (other than the stainless steel components) shall be protected by a factory applied spray coating of acrylic dispersion zinc phosphate primer with a high solids two part epoxy paint finish on the exterior of the pump.

Sealing design for the pump/motor assembly shall incorporate metal to metal contact between machined surfaces. Critical mating surfaces where a watertight seal is required shall be machined and fitted with Nitrile or Viton rubber O-rings. Sealing will be the result of controlled compression of rubber O-rings in two planes and O-ring contact of four sides without requiring a specific torque limit. Rectangular cross sectioned gaskets requiring specific torque limits to achieve compression shall not be considered adequate or equal. No secondary sealing compounds shall be used.

Impeller: *The impeller shall be of gray cast iron, ASTM A-48, Class 40 and shall be of the semi-open, non-clogging dynamically balanced single vane design capable of passing a minimum of 3.1" diameter spherical solids. The impeller shall have a slip fit into the motor shaft and drive key ,and shall be fastened to the shaft by a stainless steel bolt which is mechanically prevented from loosening by a positively engaged ratcheting washer assembly.*

Self Cleaning Wear Plate: *(CB System) The pump shall be equipped with a self cleaning wear plate constructed from gray cast iron, ASTM A-48, Class 40. The wear plate shall be mounted to the volute with four stainless steel/brass adjusting screws to permit close tolerance adjustment between the wear plate and impeller for maximum pump efficiency. The wear plate shall be easily adjustable, without requiring disassembly of the pump. The wear plate shall be designed with a wave shaped inlet and an outward spiral V-shaped groove on the side facing the impeller, to shred and force stringy solids outward from the impeller and through the pump discharge. The use of non-adjustable wear rings shall not be considered equal.*

Pump Volute: *The pump volute shall be single piece gray cast iron, ASTM A48, Class 40, non-concentric design with centerline discharge. Passages shall be smooth and large enough to pass any solids which may enter the impeller. Minimum discharge size shall be as specified. The discharge flange design shall permit attachment to standard ANSI or DIN flanges/appurtenances.*

Rotating Assembly: *The rotating assembly (impeller, shaft and rotor) shall be dynamically balanced such that undue vibration or other unsatisfactory characteristics will not result when the pump is in operation.*

Shaft: *The pump shaft and motor shaft shall be an integral unit. Each shaft shall be of 420 stainless steel material and adequately designed to meet the maximum torque required at any normal start-up condition or operating point in the system. Maximum deflection shall not exceed .002" at the lower seal. Each pump shaft shall have a polished finish and have accurately machined shoulders to accommodate bearings, seals and impeller. Carbon steel or chrome plated shafts shall not be considered adequate or equal.*

Mechanical Seals: *Each pump shall be equipped with a tandem mechanical shaft seal system consisting of two totally independent seal assemblies. The seals shall operate in a lubricant reservoir that hydro-dynamically lubricates the lapped seal faces at a constant rate. The lower, primary seal unit, located between the pump and the lubricant chamber, shall contain one stationary industrial duty* ***silicon-carbide*** *seal ring and one rotating industrial duty* ***silicon-carbide*** *seal ring. The upper, secondary seal unit, located between the lubricant chamber and motor housing, shall contain one stationary* ***carbon*** *seal ring and one rotating seal ring made from corrosion resistant* ***Cr-steel****. Each seal interface shall be held in contact by its own spring system. The seals shall not require routine maintenance, or adjustment, and shall not be dependent on the direction of rotation for proper sealing. Each pump shall be provided with a lubricant chamber for the shaft sealing system which shall provide superior heat transfer and maximum seal cooling. The lubricant chamber shall be designed to prevent overfilling, and to provide lubricant expansion capacity. The drain and inspection plug shall have a positive anti-leak seal, and shall be easily accessible from the outside of the pump. The seal system shall not rely upon the pumped media for lubrication and shall not be damaged when the pump is run dry.*

The following seal types shall not be considered acceptable or equal: Seals of proprietary design, or seals manufactured by other than major independent seal manufacturing companies. Seals requiring set screws, pins, or other mechanical locking devices to hold the seal in place, conventional double mechanical seals containing either a common single or double spring acting between the upper and lower seal faces, any system requiring a pressure differential to seat the seal and ensure sealing.

Bearings: Each pump shaft shall rotate on permanently lubricated, greased bearings. The upper bearing shall be a deep grooved ball bearing and the lower bearings shall be heavy duty double row angular contact ball bearing. Bearings shall be of sufficient size and properly spaced to transfer all radial and axial loads to the pump housing and minimize shaft deflection. L-10 bearing life shall be a minimum of 50,000 hours at flows ranging from ½ of BEP flow to 1½ times BEP flow (BEP is best efficiency point).

MOTOR

The motor housing shall be gray cast iron, ASTM A48 Class 40 and the motor shall be of the squirrel-cage induction shell type design, housed in an air filled, water tight chamber (NEMA B type) and shall be capable of continuous submerged operation underwater to a depth of 65 feet. The stator windings and stator leads shall be insulated with moisture resistant Class F insulation rated for 155oC (311 oF). The stator shall be heat-shrink fitted into the stator housing. The use of bolts, pins or other fastening devices requiring penetration of the stator housing is unacceptable. The motor shall be designed for continuous duty handling pumped media of 40oC (104 oF) and capable of handling up to 12 evenly spaced starts per hour. The service factor (as defined by NEMA) shall be a minimum of 1.10 (1.0 for M90/4). The motor shall have a voltage tolerance of +/- 10% from nominal.

The rotor bars and short circuit rings shall be made of cast aluminum. The motor shall be designed for continuous duty, completely submerged or unsubmerged. For unsubmerged (dry pit) applications, a cooling jacket shall be fitted to the motor to allow the pumped fluid to be circulated around the motor for cooling with the provisions under the "Cooling System" section of this specification. The explosion proof variant shall be FM approved for use in NEC Class I, Division I, Groups C & D hazardous locations.

Cooling System: *Each unit shall be able to be provided with an adequately designed cooling system. The cooling jacket shall surround the stator housing, thereby providing heat dissipation of the motor. Impeller back vanes shall provide the necessary circulation of the pumped media through the cooling jacket. The impeller and back plate interface shall incorporate dimensional tolerances designed to prevent damaging particles from entering the cooling jacket. In addition, the back of the impeller shall incorporate a cutter design which ensures that stringy or fibrous material can not enter the cooling jacket. The cooling jacket shall be a non-clog design by virtue of these features, and clean out ports on the cooling jacket shall* ***not*** *be required. Provisions for external cooling can be provided as an option.*

Thermal Protection: *Each phase of the motor shall contain a bi-metallic temperature monitor in the upper portion of the stator windings. These thermal switches shall be connected in series and set to open at 140oC +/- 5oC. They shall be connected to the control panel, and used in conjunction with and supplemental to external motor overload protection.*

Seal Failure Early Warning System: *An electrical probe shall be provided in the oil chamber for detecting the presence of water in the oil chamber. This probe shall be provided for both standard and explosion proof versions. A solid-state device mounted in the pump control panel or in a separate enclosure shall send a low voltage, low amperage signal to the probe. If water enters the oil chamber, the probe shall signal the solid state relay in the control panel. The relay shall then energize a warning light on the control panel, or cause the pump to be shut down (optional). Float switches, dual probes, or any other monitoring devices located in the stator housing are not considered to be early warning systems, and shall not be considered equal.*

Power Cables: *The power cables shall be sized according to NEC and CSA standards and shall be of sufficient length to reach the junction box without requiring splices. The outer jacket of the cable shall be oil resistant chloroprene rubber, and shall be capable of continuous submerged operation underwater to a depth of 65 feet.*

Cable Entry/Junction Chamber: *The cable entry design shall not require specific torque requirements to insure a watertight seal. The cable entry shall consist of a cylindrical elastomer grommet, flanked by stainless steel washers. A cable cap incorporating a strain relief shall mount to the cable entry boss compressing the grommet ID to the cable while the grommet OD seals against the bore of the cable entry. The entry as part of the motor shall be FM approved for use in NEC Class I, Division I, Groups C & D hazardous locations. As an option a removable explosion proof junction chamber shall be available. The junction chamber with terminal board shall fit to the cable entry boss. The junction chamber shall be equipped with a removable cover allowing for cable removal or voltage change without opening the motor. The junction chamber shall be sealed from the motor by means of a sealing gland.*

PUMP CURVE

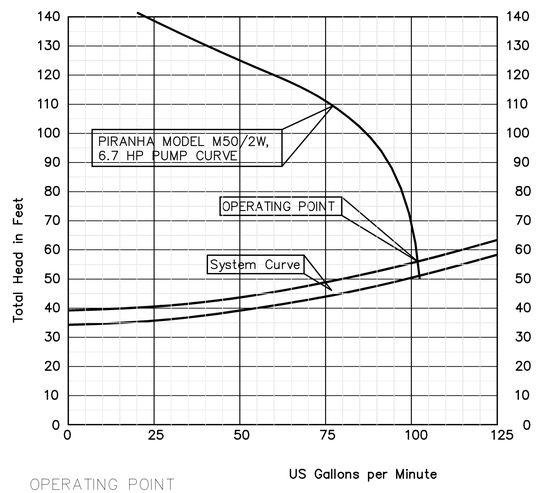

OPERATING POINT
110 GPM @ 55 TDH

TOP ELEVATION = 82.75'
INFLUENT INVERT = 68.50'
HIGH LEVEL ALARM = 68.00'
LAG PUMP ON = 67.50'
LEAD PUMP ON = 67.00'
PUMP OFF = 65.50'
BOTTOM OF WELL = 64.50'

ENLARGED PUMP STATION PLAN

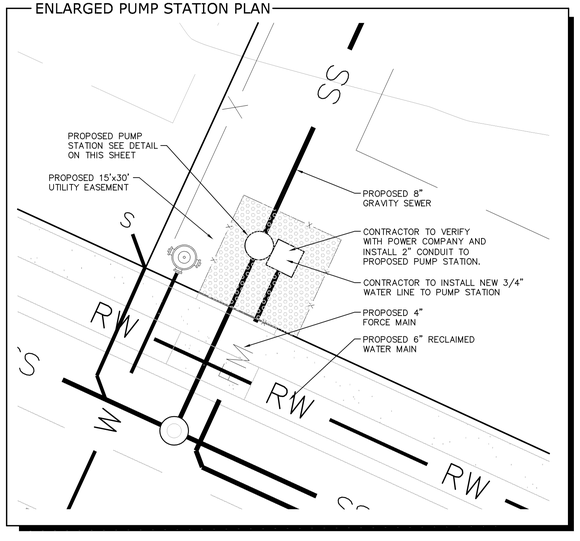

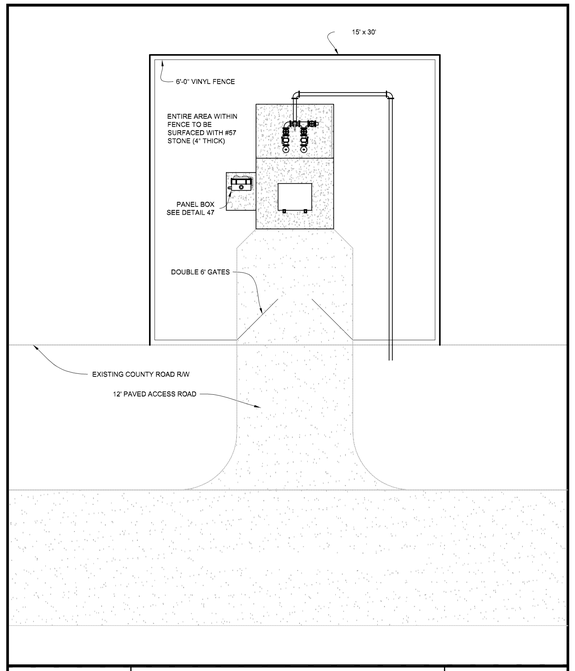

CREATED 02/24/03 REVISED	PUMP STATION (DUPLEX) SITE PLAN & ACCESS	PROVIDED FOR INFORMATIONAL PURPOSES ONLY. NO MODIFICATIONS WITHOUT WRITTEN PCU APPROVAL
	PASCO COUNTY UTILITIES	DETAIL 44

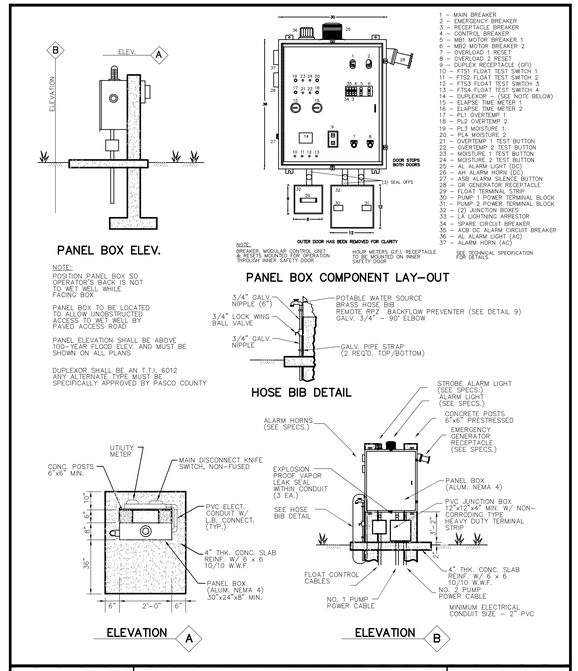

CREATED 02/24/03 REVISED	STANDARD PUMP STATION (DUPLEX) PANEL BOX ELEVATION & COMPONENT LAY-OUT	PROVIDED FOR INFORMATIONAL PURPOSES ONLY. NO MODIFICATIONS WITHOUT WRITTEN PCU APPROVAL
	PASCO COUNTY UTILITIES	DETAIL 47

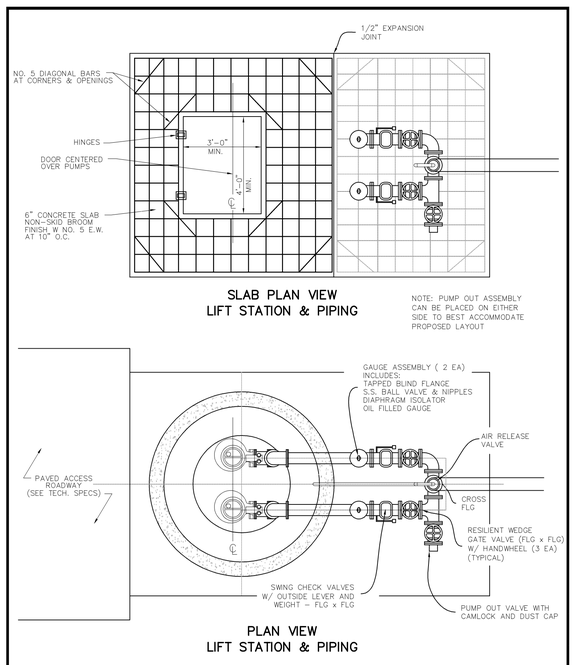

CREATED 02/24/03 REVISED	PUMP STATION SLAB & PIPING PLAN	PROVIDED FOR INFORMATIONAL PURPOSES ONLY. NO MODIFICATIONS WITHOUT WRITTEN PCU APPROVAL
	PASCO COUNTY UTILITIES	DETAIL 45

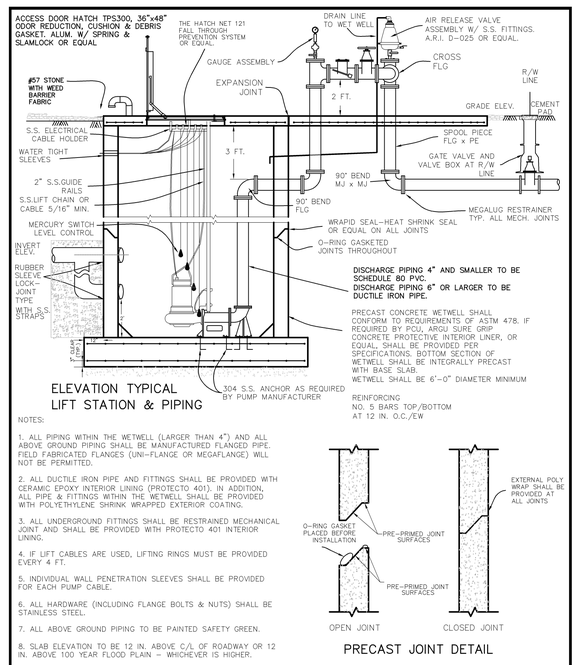

CREATED 02/24/03 REVISED	DUPLEX PUMP STATION ELEVATION & PIPING PROFILE	PROVIDED FOR INFORMATIONAL PURPOSES ONLY. NO MODIFICATIONS WITHOUT WRITTEN PCU APPROVAL
	PASCO COUNTY UTILITIES	DETAIL 46

THIS DRAWING AND THE DESIGN SHOWN ARE THE PROPERTY OF SPRING ENGINEERING, INC. AND ARE NOT TO BE REPRODUCED, COPIED, PUBLISHED, OR USED IN WHOLE OR PART WITHOUT WRITTEN CONSENT. THEY ARE TO BE USED ONLY FOR THE SITE AND PROJECT IDENTIFIED AND SHALL BE RETURNED UPON REQUEST.

100%
CONSTRUCTION DOCS.
ISSUE DATE: 02.10.16

REVISIONS		
REV	DATE	DESCRIPTION

"IT IS A VIOLATION OF LAW FOR ANY PERSON, UNLESS ACTING UNDER THE DIRECTION OF A LICENSED PROFESSIONAL ENGINEER, TO ALTER THIS DOCUMENT IN ANY WAY."

YANCEY B. ABUTON
P.E. NO. 63766
DATE

PRISTINE LAKE PRESERVE

Ehren Cutoff and Parkway Blvd
Pasco County, Florida

CONTRACT DATE:
August 20, 2015

SPRING ENGINEERING, INC.
ENGINEERING • LAND PLANNING • ARCHITECTURE
3014 U.S. HWY 19, HOLIDAY, FL (727) 938-1516
FL COA NO. 00005158 & LICENSE NO. AR-C001747

LIFT STATION DETAILS

DESIGNED BY:	JAY
DRAWN BY:	JAY
CHECKED BY:	RPD
JOB NO.	2015-11
SHEET NO.	C4.3

SECTION 01, TOWNSHIP 26 SOUTH, RANGE 18 EAST
SECTION 06, TOWNSHIP 26 SOUTH, RANGE 19 EAST
PASCO COUNTY, FLORIDA

PRISTINE LAKE, LLC IS THE ENTITY RESPONSIBLE FOR THE MAINTENANCE OF ALL LANDSCAPING.

TREE REMOVAL

TREES TO BE REMOVED

LIVE OAKS SIZE (INCHES)	No.	TOTAL (INCHES)	OTHER TREES No.	TOTAL (INCHES)
10"	1	10"	0	0"
11"	1	11"	0	0"
12"	2	24"	0	0"
13"	1	13"	0	0"
14"	6	84"	0	0"
15"	0	0"	1	15"
18"	2	36"	0	0"
19"	2	38"	0	0"
20"	4	80"	0	0"
21"	1	21"	0	0"
24"	5	120"	2	48"
27"	1	27"	0	0"
28"	2	56"	0	0"
35"	1	35"	0	0"
36"	2	72"	0	0"
38"	1	38"	0	0"
40"	2	80"	0	0"
44"	1	44"	0	0"
48"	1	48"	0	0"
TOTAL OAK:	35 =	837"	TOTAL Other:	63"

TREES TO BE PLANTED

LIVE OAKS SIZE (INCHES)	No.	TOTAL (INCHES)	OTHER TREES No.	TOTAL (INCHES)
2"	0	0"		

RESIDENTIAL LOTS ARE TO MEET PASCO COUNTY LANDSCAPE ORDINANCE:

DEVELOPER PROVIDED TREES:
PERIMETER TREES PROVIDED = **93 TREES**

BUILDER PROVIDED TREES:
(32) 6,001–7,500 SF LOTS x (3) TREES PER LOT
(88) 7,501–9,500 SF LOTS x (4) TREES PER LOT
TOTAL TREES TO BE PROVIDED = **448 TREES**

TOTAL PROVIDED TREES 93 + 448 = **541 TREES**

TOTAL EXISTING TREES ONSITE: 1,793"
– TOTAL TREES REMOVED: 900"
– TOTAL TREES SAVED: 893"

REQUIRED REPLACEMENT:
(OAK=837")+ (OTHERS 63"/3=21") = 858"
541 x 2" = 1,082" PLANTED TREES

"NO TREE MITIGATION REQUIRED"

SEE SHEET C1.0 FOR TREES TO BE REMOVED

PLANTING LEGEND

TREES	ID	NAME	QTY	DT	NF	DESCRIPTION
	OAK	QUERCUS VIRGINIANA (LIVE OAK)	13	YES	YES	6' tall (min); 2" caliper (min); containerized
	MAPLE	ACER RUBRUM (RED MAPLE)	18	YES	YES	6' tall (min); 2" caliper (min); containerized
	PALM	SABAL PALMETTO (CABBAGE PALM)	5/15	YES	YES	10' (min.) clear trunk; 3 palms = 1 tree
	HORNBEAM	CARPINUS CAROLINIANA (HORNBEAM)	9	YES	YES	6' tall (min); 2" caliper (min); containerized
	FRINGE TREE	CHIONANTHUS VIRGINCUS (FRINGETREE)	8	NO	YES	6' tall (min); 2" caliper (min); containerized
	REDBUD	CERCIS CANADENSIS (EASTERN REDBUD)	12	YES	YES	6' tall (min); 2" caliper (min); containerized
	DOGWOOD	CORNUS FLORIDA (FLOWERING DOGWOOD)	11	YES	YES	6' tall (min); 2" caliper (min); containerized
	CYPRESS	TAXODIUM ASCENDENS (POND CYPRESS)	21	NO	YES	6' tall (min); 2" caliper (min); containerized

SHRUBS	ID	NAME	QTY	DT	NF	DESCRIPTION
S	SS	CALYCANTHUS FLORIDUS (SWEET SHRUB)	170	NO	YES	18" tall (min); 3 gal. container (min); plant 36" O.C.
B	AB	GAMOLEPIS CHRYSANTHEMOIDES (AFRICAN BUSH–DAISY)	170	YES	NO	18" tall (min); 3 gal. container (min); plant 36" O.C.
P	FP	FORESTIERA SEGREGATA (FLORIDA PRIVET)	170	YES	YES	18" tall (min); 3 gal. container (min); plant 36" O.C.
E	CB	ERYTHRINA HERBACEA (CORAL BEAN)	150	YES	YES	18" tall (min); 3 gal. container (min); plant 36' O.C.
C	C	CODIAEUM VARIEGATUM (CROTON)	155	YES	NO	18" tall (min); 3 gal. container (min); plant 36" O.C.
GROUND COVER						
	SF	NEPHROLEPIS EXALTATA (SWORD FERN)	300	NO	YES	1 gal. container (min); plant 24" O.C.
	PL	LANTANA MONTEVIDENSIS (PURPLE LANTANA)	300	YES	YES	1 gal. container (min); plant 24" O.C.
	BS	HELIANTHUS DEBILIS (BEACH SUNFLOWER)	400	YES	YES	1 gal. container (min); plant 24" O.C.
	FH	CUPHEA HYSSOPIFOLIA (FALSE HEATHER)	400	YES	NO	1 gal. container (min); plant 24" O.C.
	BES	RUDBECKIA HIRTA (BLACK EYED SUSAN)	400	YES	YES	1 gal. container (min); plant 24" O.C.
	SOD	STENOTAPHRUM SECUNDATUM (ST. AUGUSTINE/ FLORITAN)				NO MORE THAN 30% OF REQUIRED LANDSCAPE
	SOD	PASPALUM NOTATUM (BAHIA GRASS)				180 LBS OF BAHIA SEED PER ACRE
	MULCH	RED CEDAR MULCH				ALL TREES, SHRUBS AND GROUND COVER

NOTE:
1. ALL PLANTS TO BE FLORIDA No. 1 GRADE OR BETTER.

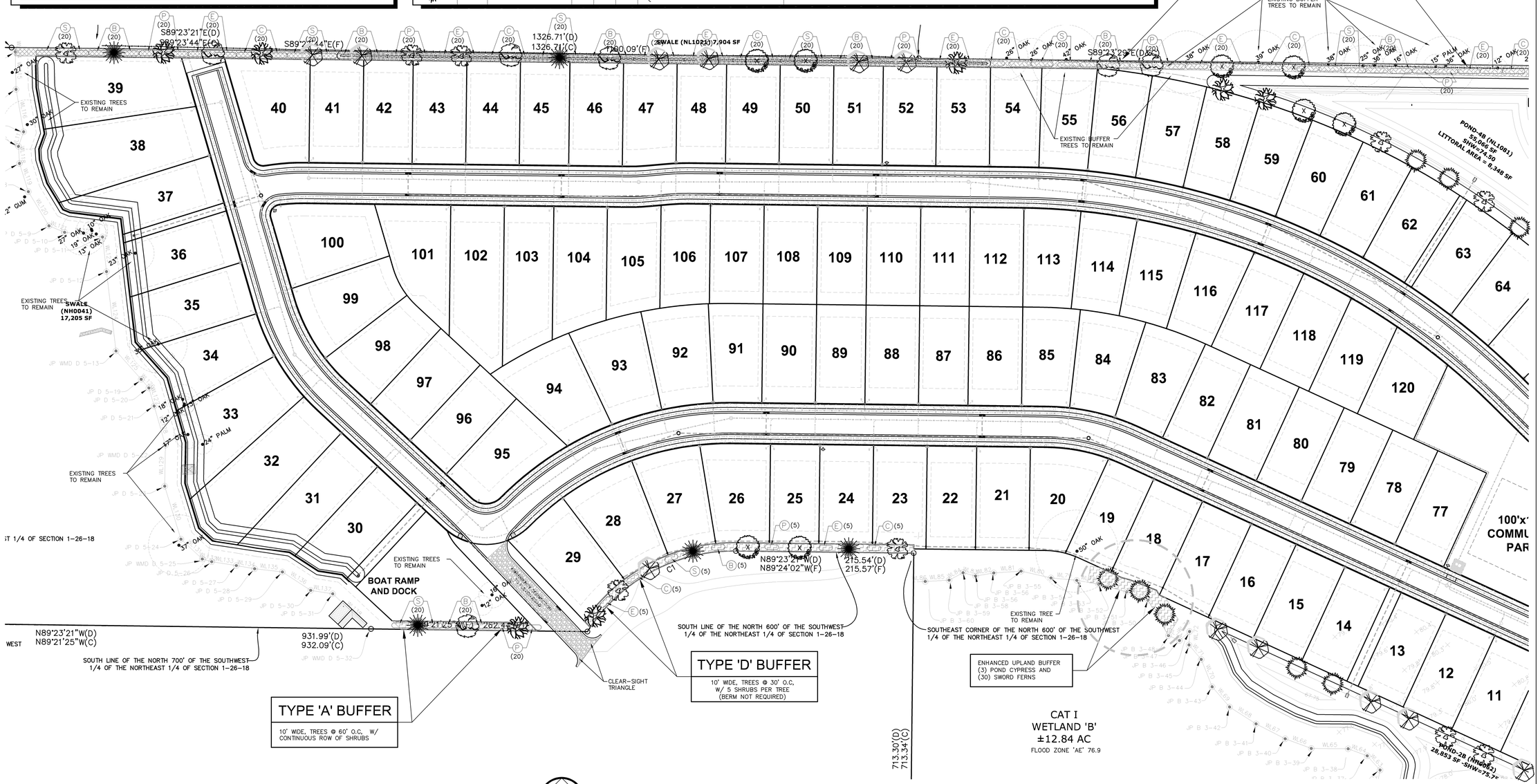

LANDSCAPE PLAN
SCALE: 1"= 60'

60 30 0 60 120

THIS DRAWING AND THE DESIGN SHOWN ARE THE PROPERTY OF SPRING ENGINEERING, INC. AND ARE NOT TO BE REPRODUCED, COPIED, PUBLISHED, OR USED IN WHOLE OR PART WITHOUT WRITTEN CONSENT. THEY ARE TO BE USED ONLY FOR THE SITE AND PROJECT IDENTIFIED AND SHALL BE RETURNED UPON REQUEST.

100%
CONSTRUCTION DOCS.
ISSUE DATE: 02.10.16

REVISIONS

REV	DATE	DESCRIPTION

YANCEY B. ABUTON
P.E. NO. 63766
DATE

PRISTINE LAKE PRESERVE

Ehren Cutoff and Parkway Blvd
Pasco County, Florida

CONTRACT DATE:
August 20, 2015

SPRING ENGINEERING, INC.
ENGINEERING • LAND PLANNING • ARCHITECTURE
3014 U.S. HWY 19, HOLIDAY, FL (727) 938–1516
FL COA NO. 00005158 & LICENSE NO. AA–C001747

LANDSCAPE PLAN

DESIGNED BY: JAY
DRAWN BY: JAY
CHECKED BY: RPD
JOB NO. 2015-11
SHEET NO. C5.0

SECTION 01, TOWNSHIP 26 SOUTH, RANGE 18 EAST
SECTION 06, TOWNSHIP 26 SOUTH, RANGE 19 EAST
PASCO COUNTY, FLORIDA

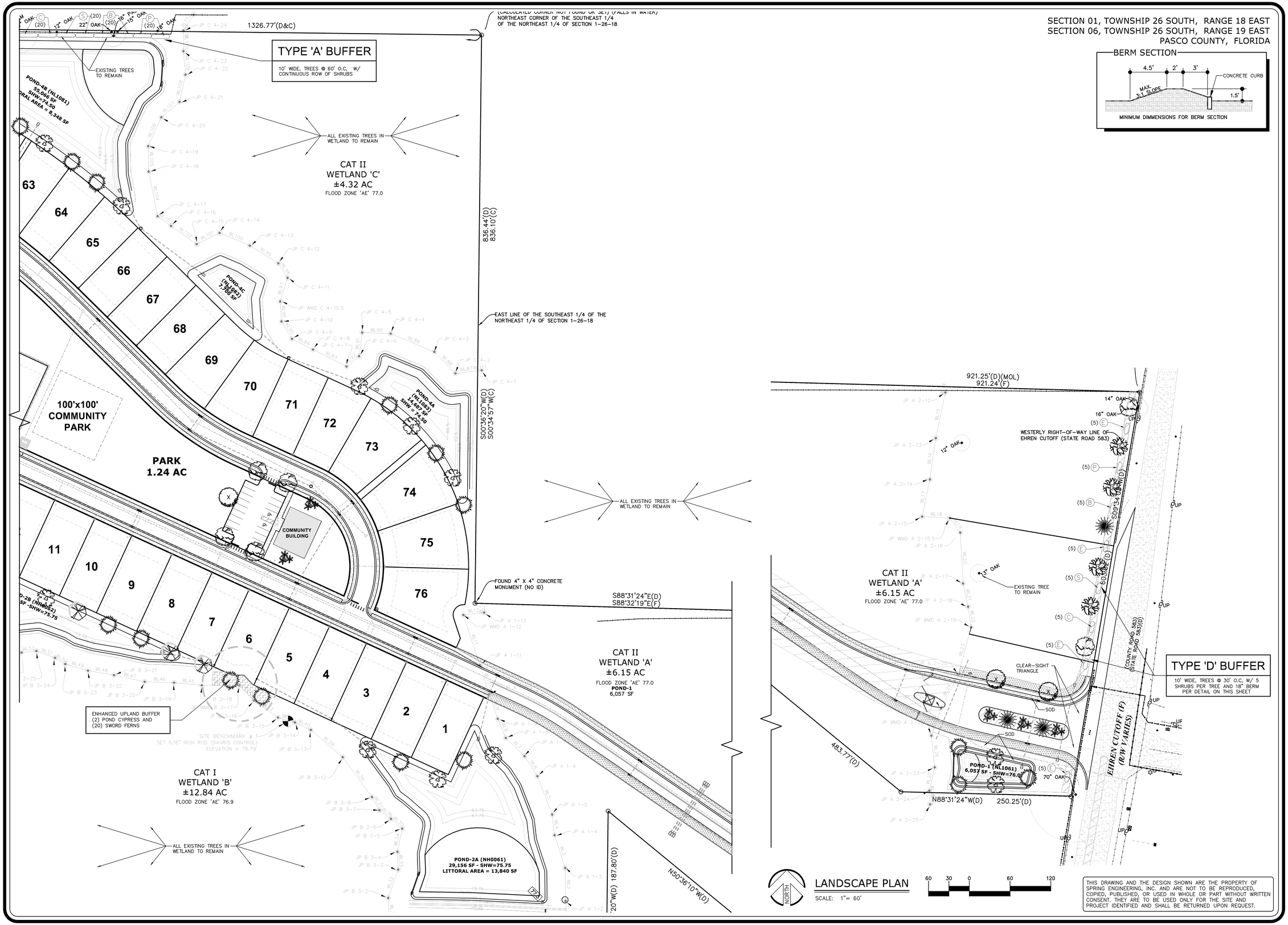

BERM SECTION

MINIMUM DIMMENSIONS FOR BERM SECTION

LANDSCAPE PLAN

SCALE: 1"= 60'

60 30 0 60 120

THIS DRAWING AND THE DESIGN SHOWN ARE THE PROPERTY OF SPRING ENGINEERING, INC. AND ARE NOT TO BE REPRODUCED, COPIED, PUBLISHED, OR USED IN WHOLE OR PART WITHOUT WRITTEN CONSENT. THEY ARE TO BE USED ONLY FOR THE SITE AND PROJECT IDENTIFIED AND SHALL BE RETURNED UPON REQUEST.

100%
CONSTRUCTION DOCS.
ISSUE DATE: 02.10.16

REVISIONS

REV	DATE	DESCRIPTION

YANCEY B. ABUTON
P.E. NO. 63766
DATE

PRISTINE LAKE PRESERVE

Ehren Cutoff and Parkway Blvd
Pasco County, Florida

CONTRACT DATE:
August 20, 2015

SPRING ENGINEERING, INC.
ENGINEERING • LAND PLANNING • ARCHITECTURE
3014 U.S. HWY 19, HOLIDAY, FL (727) 938-1516
FL COA NO. 00005158 & LICENSE NO. AA-C001747

LANDSCAPE PLAN

DESIGNED BY: JAY
DRAWN BY: JAY
CHECKED BY: RPD
JOB NO.
2015-11
SHEET NO.
C5.1

DASHED LINES ILLUSTRATE BRANCHES AND STUMPS THAT ARE TO BE REMOVED.
DO NOT REMOVE THE LEADER.

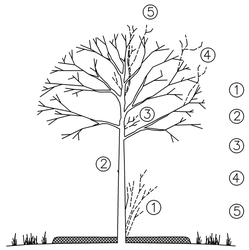

1. REMOVE SUCKERS & SHOOTS AT BASE OF TREE
2. MAKE CLEAN CUTS ON OLD STUBS, IF PRESENT
3. REMOVE ENTIRE SUPPLY OF TWIGS & BUDS ON TRUNK
4. SHAPE TREE BY REMOVING DAMAGED & MISSHAPEN BRANCHES
5. REMOVE CROSS BRANCHES & THOSE DEVELOPING INTO SECONDARY LEADERS

1 DECIDUOUS TREE PRUNING

IF ROOTBALL IS WRAPPED IN NON-BIODEGRADEABLE BURLAP, REMOVE ENTIRE WRAP AFTER IT IS PLACED IN PIT. WHEN BACKFILLING, PLACE SOIL IN TWO LIFTS. AFTER FIRST LIFT, PUDDLE SOIL IN WITH WATER TO REMOVE ALL AIR POCKETS. PLACE SECOND LIFT AND REPEAT. CONTINUE TO PUDDLE AND FILL AS NECESSARY.

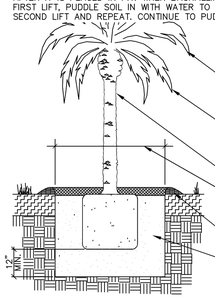

- FOR BARE ROOT, FIELD DUG OR BALL & BURLAP SPECIMENS: FRONDS SHALL REMAIN TIED FOR 3 MONTHS AFTER PLANTING.
- FOR CONTAINER GROWN TREES: SHIPPING FROND TIES MAY BE REMOVED AFTER INSTALLATION. TIES SHALL BE ORGANIC TWINE ONLY.
- SET TRUNK VERTICAL, PLUMB
- 3 TIMES WIDTH OF ROOT BALL OR 12" MIN. CLEARANCE AROUND ROOTBALL
- PROVIDE 3" HIGH SOIL SAUCER AND MULCH RING
- BACKFILL SHALL BE SALT FREE WASHED RIVER SAND. ALL BACKFILL SHALL BE WATER-JETTED FOR FIRM COMPACTION.

5 PALM TREE PLANTING DETAIL

TYPE D BUFFER (right-of-way buffer) – A landscape buffer shall be required adjacent to any road right-of-way external to the development. Shade trees shall be planted with a maximun spacing of thirty (30) feet on center. The remainder of the buffer shall be landscaped with shrubs, at a minimum rate of five (5) shrubs per tree or palm, and ground cover.

The existing native vegetation within the required buffers is to be preserved in place of new plantings. If at any point along the proposed landscape buffers, the existing trees are greater than 30" on center or the existing shrubs are less than the minimum required by code, a new 2" dbh oak or native shrub (18" tall, 24" oc, 3 gal., minimum of 4 species selected from list in appendix a of landscape code) shall be planted within the buffer to bring the buffer up to the minimum standards.

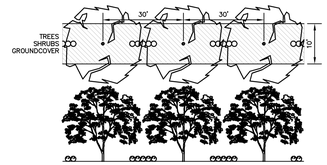

1 10' TYPE 'D' BUFFER

TYPE D BUFFER (right-of-way buffer) – A landscape buffer shall be required adjacent to any road right-of-way external to the development. A right-of-way width of 100 or more feet requires a minimum fifteen (15) foot wide buffer. Shade trees shall be planted with a maximun spacing of thirty (30) feet on center. The remainder of the buffer shall be landscaped with shrubs, at a minimum rate of five (5) shrubs per tree or palm, and ground cover.

The existing native vegetation within the required buffers is to be preserved in place of new plantings. If at any point along the proposed landscape buffers, the existing trees are greater than 30" on center or the existing shrubs are less than the minimum required by code, a new 3" dbh oak or native shrub (24" tall, 24" oc, 3 gal., minimum of 4 species selected from list in appendix a of landscape code) shall be planted within the buffer to bring the buffer up to the minimum standards.

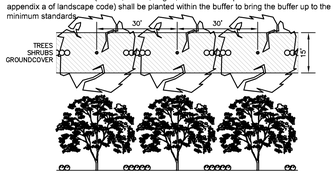

5 15' TYPE 'D' BUFFER

IF ROOTBALL IS WRAPPED IN NON-BIODEGRADEABLE BURLAP, REMOVE ENTIRE WRAP AFTER IT IS PLACED IN PIT. WHEN BACKFILLING, PLACE PLANTING SOIL IN TWO LIFTS. AFTER FIRST LIFT, PUDDLE SOIL IN WITH WATER TO REMOVE ALL AIR POCKETS. PLACE SECOND LIFT AND REPEAT. CONTINUE TO PUDDLE AND FILL AS NECESSARY.

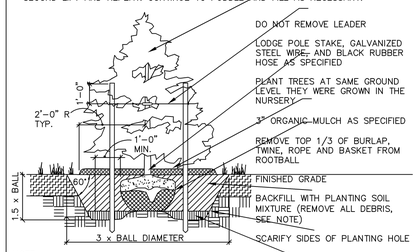

- DO NOT REMOVE LEADER
- LODGE POLE STAKE, GALVANIZED STEEL WIRE, AND BLACK RUBBER HOSE AS SPECIFIED
- PLANT TREES AT SAME GROUND LEVEL THEY WERE GROWN IN THE NURSERY
- 3" ORGANIC MULCH AS SPECIFIED
- REMOVE TOP 1/3 OF BURLAP, TWINE, ROPE AND BASKET FROM ROOTBALL
- FINISHED GRADE
- BACKFILL WITH PLANTING SOIL MIXTURE (REMOVE ALL DEBRIS, SEE NOTE)
- SCARIFY SIDES OF PLANTING HOLE
- BREAK 6" SUB-SOIL AS NECESSARY

NOTE:
ALL TREE STAKES AND SUPPORT WIRE ARE TO BE REMOVED AFTER ONE (1) COMPLETE GROWING SEASON.

2 EVERGREEN TREE PLANTING DETAIL

IF ROOTBALL IS WRAPPED IN NON-BIODEGRADEABLE BURLAP, REMOVE ENTIRE WRAP AFTER IT IS PLACED IN PIT. WHEN BACKFILLING, PLACE PLANTING SOIL IN TWO LIFTS. AFTER FIRST LIFT, PUDDLE SOIL IN WITH WATER TO REMOVE ALL AIR POCKETS. PLACE SECOND LIFT AND REPEAT. CONTINUE TO PUDDLE AND FILL AS NECESSARY.

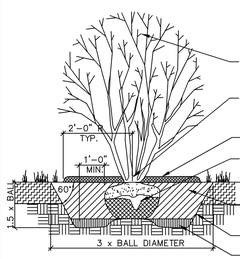

- DO NOT REMOVE LEADER(S), PRUNE BRANCHES IF BROKEN OR DAMAGED ONLY-SEE DETAIL THIS SHEET
- PLANT TREES AT SAME GROUND LEVEL THEY WERE GROWN IN THE NURSERY
- 3" ORGANIC MULCH AS SPECIFIED
- REMOVE TOP 1/3 OF BURLAP, TWINE, ROPE AND BASKET FROM ROOTBALL
- FINISHED GRADE
- BACKFILL WITH SOIL FROM PLANT PIT (REMOVE ALL DEBRIS, SEE NOTE)
- SCARIFY SIDES OF PLANTING HOLE
- BREAK 6" SUB-SOIL AS NECESSARY

6 MULTI-STEMMED TREE DETAIL

IF ROOTBALL IS WRAPPED IN NON-BIODEGRADEABLE BURLAP, REMOVE ENTIRE WRAP AFTER IT IS PLACED IN PIT. WHEN BACKFILLING, PLACE PLANTING SOIL IN TWO LIFTS. AFTER FIRST LIFT, PUDDLE SOIL IN WITH WATER TO REMOVE ALL AIR POCKETS. PLACE SECOND LIFT AND REPEAT. CONTINUE TO PUDDLE AND FILL AS NECESSARY.

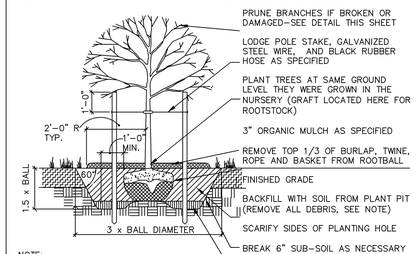

- PRUNE BRANCHES IF BROKEN OR DAMAGED-SEE DETAIL THIS SHEET
- LODGE POLE STAKE, GALVANIZED STEEL WIRE, AND BLACK RUBBER HOSE AS SPECIFIED
- PLANT TREES AT SAME GROUND LEVEL THEY WERE GROWN IN THE NURSERY (GRAFT LOCATED HERE FOR ROOTSTOCK)
- 3" ORGANIC MULCH AS SPECIFIED
- REMOVE TOP 1/3 OF BURLAP, TWINE, ROPE AND BASKET FROM ROOTBALL
- FINISHED GRADE
- BACKFILL WITH SOIL FROM PLANT PIT (REMOVE ALL DEBRIS, SEE NOTE)
- SCARIFY SIDES OF PLANTING HOLE
- BREAK 6" SUB-SOIL AS NECESSARY

NOTE:
ALL TREE STAKES AND SUPPORT WIRE ARE TO BE REMOVED AFTER ONE (1) COMPLETE GROWING SEASON.

3 CANOPY TREE (2" or less) DETAIL

REMOVE ALL CONTAINERS AND BURLAP, TWINE, ROPE AND BASKET. PRUNE ROOTS IF BALL IS ROOTBOUND. WHEN BACKFILLING PLANT PIT, PLACE PLANTING SOIL IN TWO LIFTS. AFTER FIRST LIFT, PUDDLE SOIL IN WITH WATER TO REMOVE ALL AIR POCKETS. PLACE SECOND LIFT AND REPEAT. CONTINUE TO PUDDLE AND FILL AS NECESSARY.

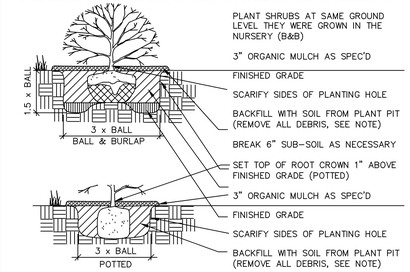

- PLANT SHRUBS AT SAME GROUND LEVEL THEY WERE GROWN IN THE NURSERY (B&B)
- 3" ORGANIC MULCH AS SPEC'D
- FINISHED GRADE
- SCARIFY SIDES OF PLANTING HOLE
- BACKFILL WITH SOIL FROM PLANT PIT (REMOVE ALL DEBRIS, SEE NOTE)
- BREAK 6" SUB-SOIL AS NECESSARY
- SET TOP OF ROOT CROWN 1" ABOVE FINISHED GRADE (POTTED)
- 3" ORGANIC MULCH AS SPEC'D
- FINISHED GRADE
- SCARIFY SIDES OF PLANTING HOLE
- BACKFILL WITH SOIL FROM PLANT PIT (REMOVE ALL DEBRIS, SEE NOTE)

7 SHRUB PLANTING DETAIL

IF ROOTBALL IS WRAPPED IN NON-BIODEGRADEABLE BURLAP, REMOVE ENTIRE WRAP AFTER IT IS PLACED IN PIT. WHEN BACKFILLING, PLACE PLANTING SOIL IN TWO LIFTS. AFTER FIRST LIFT, PUDDLE SOIL IN WITH WATER TO REMOVE ALL AIR POCKETS. PLACE SECOND LIFT AND REPEAT. CONTINUE TO PUDDLE AND FILL AS NECESSARY.

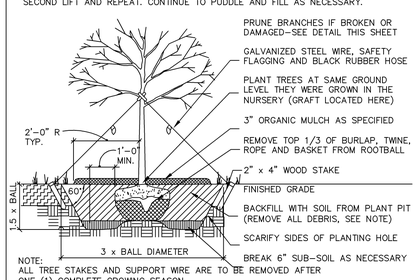

- PRUNE BRANCHES IF BROKEN OR DAMAGED-SEE DETAIL THIS SHEET
- GALVANIZED STEEL WIRE, SAFETY FLAGGING AND BLACK RUBBER HOSE
- PLANT TREES AT SAME GROUND LEVEL THEY WERE GROWN IN THE NURSERY (GRAFT LOCATED HERE)
- 3" ORGANIC MULCH AS SPECIFIED
- REMOVE TOP 1/3 OF BURLAP, TWINE, ROPE AND BASKET FROM ROOTBALL
- 2" x 4" WOOD STAKE
- FINISHED GRADE
- BACKFILL WITH SOIL FROM PLANT PIT (REMOVE ALL DEBRIS, SEE NOTE)
- SCARIFY SIDES OF PLANTING HOLE
- BREAK 6" SUB-SOIL AS NECESSARY

NOTE:
ALL TREE STAKES AND SUPPORT WIRE ARE TO BE REMOVED AFTER ONE (1) COMPLETE GROWING SEASON.

4 CANOPY TREE (2"+ cal.) DETAIL

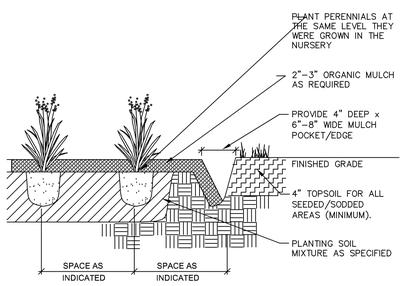

- PLANT PERENNIALS AT THE SAME LEVEL THEY WERE GROWN IN THE NURSERY
- 2"-3" ORGANIC MULCH AS REQUIRED
- PROVIDE 4" DEEP x 6"-8" WIDE MULCH POCKET/EDGE
- FINISHED GRADE
- 4" TOPSOIL FOR ALL SEEDED/SODDED AREAS (MINIMUM).
- PLANTING SOIL MIXTURE AS SPECIFIED

8 GROUNDCOVER PLANTING DETAIL

THIS DRAWING AND THE DESIGN SHOWN ARE THE PROPERTY OF SPRING ENGINEERING, INC. AND ARE NOT TO BE REPRODUCED, COPIED, PUBLISHED, OR USED IN WHOLE OR PART WITHOUT WRITTEN CONSENT. THEY ARE TO BE USED ONLY FOR THE SITE AND PROJECT IDENTIFIED AND SHALL BE RETURNED UPON REQUEST.

100%
CONSTRUCTION DOCS.
ISSUE DATE: 02.10.16

REVISIONS

REV	DATE	DESCRIPTION

YANCEY B. ABUTON
P.E. NO. 63766
DATE

NOT VALID WITHOUT SIGNATURE AND ORIGINAL RAISED SEAL OF A FLORIDA LICENSED PROFESSIONAL ENGINEER

PRISTINE LAKE PRESERVE

Ehren Cutoff and Parkway Blvd
Pasco County, Florida

CONTRACT DATE:
August 20, 2015

SPRING ENGINEERING, INC.
ENGINEERING • LAND PLANNING • ARCHITECTURE
3014 U.S. HWY 19, HOLIDAY, FL (727) 938-1516
FL COA NO. 00005158 & LICENSE NO. AA-C001747

LANDSCAPE DETAILS

DESIGNED BY: JAY
DRAWN BY: JAY
CHECKED BY: RPD
JOB NO.
2015-11

SHEET NO.
C5.2

TESTING SCHEDULE GUIDE

ITEM	TEST TYPE	TEST I.D.	REQUIREMENTS	FREQUENCY
EMBANKMENT	MAXIMUM DENSITY OPTIMUM MOISTURE FIELD DENSITY	AASHTO T180 ASTM D1557 AASHTO T191, T204, T238 ASTM D1556, D2937, D2922	N/A 95% OF MAXIMUM DENSITY	PER SOIL TYPE ONE PER 2,500 S.F. HORIZONTALLY * ALTERNATING LIFTS (12")
UTILITY TRENCH BACKFILL UNDER ROADWAYS AND STRUCTURES	MAXIMUM DENSITY OPTIMUM MOISTURE FIELD DENSITY	AASHTO T180 ASTM D1557 AASHTO T191, T204, T238 ASTM D1556, D2937, D2922	N/A 95% OF MAXIMUM DENSITY	PER SOIL TYPE ONE PER 2,500 S.F. HORIZONTALLY * EVERY 2' VERTICALLY D2922 – AT LEAST ONE FOR EACH PIPE RUN
BACKFILL OF STRUCTURES	MAXIMUM DENSITY OPTIMUM MOISTURE FIELD DENSITY	AASHTO T180 ASTM D1557 AASHTO T191, T204, T238 ASTM D1556, D2937, D2922	N/A 95% OF MAXIMUM DENSITY	PER SOIL TYPE ONE PER 2,500 S.F. EVERY 2' VERTICALLY
SUBGRADE	BEARING VALUES MAXIMUM DENSITY OPTIMUM MOISTURE FIELD DENSITY & THICKNESS	LBR – FLA. D.O.T. AASHTO T180 ASTM D1557 AASHTO T191, T238 ASTM D1556, D2922	LBR = 40 MIN. N/A 98% OF MAXIMUM DENSITY	ONE PER SOIL TYPE CHECK POINT LBR AT 500 L.F. HORIZONTALLY ONE PER SOIL TYPE ONE PER 2,500 S.F. HORIZONTALLY
BASE	BEARING VALUES MAXIMUM DENSITY OPTIMUM MOISTURE THICKNESS FIELD DENSITY GRADATION ATTERBURG LIMITS	LBR – FLA. D.O.T. AASHTO T180 ASTM D1557 AASHTO T191, T238 ASTM D1556, D2922 AASHTO T27, T98 AASHTO T90 ASTM C136, D423, D424	LBR = 100 MIN. N/A 98% OF MAXIMUM DENSITY PER SPECIFICATIONS	ONE PER SOURCE OR AS MATERIAL CHANGES CHECK POINT LBR AT 500 L.F. HORIZONTALLY ONE PER SOURCE ONE PER 2,500 S.F. HORIZONTALLY ONE PER SOURCE
SOIL CEMENT BASE MIX DESIGN (TO BE USED IF SEPARATION BETWEEN SHWT AND BOTTOM OF BASE IS < 1.5')	PORTLAND CEMENT ASSOC. SPECIFICATIONS MAXIMUM DENSITY OPTIMUM MOISTURE COMPRESSIVE STRENGTH SPECIMENS TEST CORES FIELD DENSITY & THICKNESS	AASHTO T134 (STANDARD) PORTLAND CEMENT ASSOC. SPECIFICATIONS PORTLAND CEMENT ASSOC. SPECIFICATIONS AASHTO T191, T238 ASTM D1556, D2922	PER SPECIFICATIONS N/A 300 PSI AT 7–DAYS TYPE DAILY ** 450 PSI AT 21–DAYS SET OF COMPRESSIVE ** 95% OF MAXIMUM DENSITY	ONE PER SOIL TYPE ONE PER SOIL TYPE DAILY ONE SET OF 3 PER SOIL TYPE ONE SET OF 3 PER SOIL TYPE ONE PER 2,500 S.F. HORIZONTALLY
ASPHALTIC CONCRETE	MATERIALS QUALITY BITUMEN CONTENT GRADATION FIELD DENSITY COMPACTION LOS ANGELES ABRASION THICKNESS	AASHTO T164 ASTM D2172 ASTM D2950–81 AASHTO T96–77 ASTM C131–81 N/A	PER SPECIFICATIONS 95% OF LAB DENSITY 95% OF MARSHALL MAXIMUM UNIT PER SPECIFICATIONS PER SPECIFICATIONS	ONE PER DAY ONE PER 2,500 S.F. HORIZONTALLY ONE PER SOURCE ONE PER 2,500 S.F.

NOTES:
- * THE CONTRACTOR SHALL NOT PAVE OVER SOIL CEMENT BASE UNTIL A 30–DAY CURING HAS ELAPSED.
- ** MAXIMUM STRENGTH LIMITS, AS ESTABLISHED BY SOILS TESTING COMPANY, SHALL NOT BE EXCEEDED.
- *** SHOULD ANY OF THE INFORMATION PROVIDED HEREIN CONFLICT WITH EITHER THE RECOMMENDATION OF THE GEOTECHNICAL ENGINEER, AND/OR THE GEOTECHNICAL REPORT, THEN THE AFOREMENTED RECOMMENDATIONS WILL SUPERCEDE THIS "TESTING SCHEDULE GUIDE".

GENERAL NOTES

A. THE LOCATIONS, ELEVATIONS AND DIMENSIONS OF EXISTING UTILITIES, STRUCTURES AND OTHER FEATURES ARE SHOWN ACCORDING TO THE BEST INFORMATION AVAILABLE AT THE TIME OF THE PREPARATION OF THESE PLANS BUT DO NOT PURPORT TO BE ABSOLUTELY CORRECT. THE CONTRACTOR SHALL FIELD VERIFY THE LOCATIONS, ELEVATIONS AND DIMENSIONS OF ALL EXISTING UTILITIES, STRUCTURES AND OTHER FEATURES AFFECTING HIS WORK PRIOR TO BIDDING AND DETERMINE THE EXACT LOCATION OF THE UTILITIES PRIOR TO CONSTRUCTION. THE CONTRACTOR SHALL NOTIFY SUNSHINE @ (800)432–4770 AND THE UTILITY COMPANIES IN THE AREA AT LEAST 48 HOURS BEFORE COMMENCING WORK. REPAIR AND REPLACEMENT OF ALL PRIVATE AND PUBLIC PROPERTY AFFECTED BY THIS WORK SHALL BE RESTORED TO A CONDITION EQUAL TO OR BETTER THAN EXISTED BEFORE COMMENCING CONSTRUCTION UNLESS SPECIFICALLY EXEMPTED BY THE PLANS. COST TO BE INCIDENTAL TO OTHER CONSTRUCTION AND NO EXTRA COMPENSATION TO BE ALLOWED.

B. ALL WORK SHALL BE LEFT IN SUCH A MANNER THAT IT IS SAFE TO THE PUBLIC. THE CONTRACTOR SHALL MAINTAIN TRAFFIC AT ALL TIMES. SIGNS AND BARRICADES TO BE ACCORDING TO F.D.O.T. MANUAL OF SAFE PRACTICES; REFERENCE F.D.O.T. INDEXES 600 THROUGH 650 AND 17349 PER ROADWAY AND TRAFFIC DESIGN STANDARDS LATEST EDITION OF D.C. INDEXES 100 THROUGH 116. THERE WILL BE NO ON–SITE BURNING.

C. ADDITIONAL CONTROL AND SCOPE OF WORK: THE CONTRACTOR SHALL PROVIDE SPRING ENGINEERING, INC. WITH AS–BUILT DRAWINGS AND SURVEYS UPON COMPLETION OF ALL WORK.

D. A SURVEYOR SHALL DO ALL BUILDING LAYOUT, CURB & ROADWAY, AND GRADE STAKING. THE CONTRACTOR SHALL VERIFY ALL DIMENSIONS IN THE FIELD AND REPORT ANY DISCREPANCIES TO THE ENGINEER PRIOR TO CONSTRUCTING ANY WORK. THE CONTRACTOR SHALL CONTACT THE ENGINEER'S OFFICE IMMEDIATELY ON ANY CONFLICTS ARISING DURING CONSTRUCTION OF ANY IMPROVEMENTS SHOWN ON THESE DRAWINGS. IT SHALL BE THE CONTRACTOR'S RESPONSIBILITY TO CONSULT WITH THE ENGINEER FOR MAKING ANY AND ALL REQUIRED INTERPRETATIONS OF THE PLANS; HOWEVER, THIS IN NO WAY RELIEVES THE CONTRACTOR OF HIS RESPONSIBILITY FOR CONSTRUCTING THE PROJECT TO ACCOMPLISH THE INTENT OF THE PLANS. ALL ELEVATIONS REFER TO NATIONAL GEODETIC VERTICAL DATUM OF 1929. MEAN SEA LEVEL = 0.00.

E. PERMITS: NO CONSTRUCTION SHALL COMMENCE UNTIL ALL APPLICABLE PERMITS HAVE BEEN APPROVED. A RIGHT–OF–WAY USE PERMIT IS REQUIRED PRIOR TO THE COMMENCEMENT OF ANY CONSTRUCTION ACTIVITY WITHIN THE RIGHT–OF–WAY, AND NO IRRIGATION SYSTEM OR LANDSCAPING SHALL BE INSTALLED IN ANY PUBLIC RIGHT–OF–WAY WITHOUT ISSUANCE OF APPROPRIATE PERMIT. ALL PROPOSED SIGNS MUST BE APPLIED FOR, APPROVED AND PERMITTED ON AN INDIVIDUAL BASIS APART FROM ANY ULTIMATELY APPROVED SITE PLAN; APPROVAL OF THIS SITE PLAN DOES NOT CONSTITUTE APPROVAL OF ANY SIGN.

F. STRIPING: HANDICAPPED PARKING SPACES WILL BE PROPERLY SIGNED AND STRIPED IN ACCORDANCE WITH FLORIDA STATUTE 316, THE MANUAL ON UNIFORM TRAFFIC CONTROL DEVICES, OR OTHER APPLICABLE STANDARDS. ALL ON–SITE PARKING SPACES SHALL BE STRIPED AND SIGNED IN ACCORDANCE WITH THE MANUAL ON UNIFORM TRAFFIC CONTROL DEVICES, LATEST EDITION. PARKING SPACES, DIRECTIONAL ARROWS, AND STOP BARS SHALL BE STRIPED IN WHITE. IT SHALL BE THE OWNER/DEVELOPERS RESPONSIBILITY TO PROPERLY SIGN AND STRIPE THE SITE IN ACCORDANCE WITH APPLICABLE STANDARDS.

G. CONCRETE: CONCRETE SHALL HAVE A COMPRESSIVE STRENGTH OF 3,000 PSI AT 28 DAYS. PORTLAND CEMENT SHALL CONFORM TO ASTM C150. AGGREGATE SHALL CONFORM TO ASTM C33. WIRE FABRIC SHALL CONFORM TO ASTM A185. READY MIXED CONCRETE SHALL CONFORM TO ASTM C–94. SIX INCH MESH, 10 GAUGE WIRE FABRIC SHALL BE USED IN SLABS THICKER THAN FOUR INCHES. STANDARD THICKNESS SHALL BE FOUR INCHES, EXCEPT AT DRIVEWAYS WHERE THE THICKNESS SHALL BE SIX INCHES. SURFACES SHALL BE FREE FROM TROWEL OR MACHINE MARKS. SURFACE VARIATIONS SHALL NOT EXCEED 1/4 INCH UNDER A 10 FOOT STRAIGHTEDGE. EDGE OF SLABS SHALL HAVE A SMOOTH FINISH. SIDEWALKS SHALL HAVE A BROOM FINISH.

H. UTILITIES: ALL UNDERGROUND UTILITIES MUST BE INSTALLED BEFORE BASE AND SURFACE COURSES ARE CONSTRUCTED. THE CONTRACTOR IS RESPONSIBLE FOR INSTALLING ALL UTILITIES IN ACCORDANCE WITH LOCAL CODES, WHETHER INDICATED ON THE PLANS OR NOT. CHECK WITH THE LOCAL GOVERNMENT PRIOR TO BID SUBMISSION. THE CONTRACTOR SHALL TAKE ALL NECESSARY MEASURES TO MINIMIZE INTERRUPTIONS OF EXISTING UTILITY SERVICE DURING CONSTRUCTION AND CONNECTION OF PROPOSED SERVICE LINES. CONFLICTS BETWEEN WATER LINES AND STORM/SANITARY SEWER SYSTEMS ARE TO BE RESOLVED BY ADJUSTING WATER LINES AS NECESSARY. CONTRACTOR SHALL MAINTAIN A MINIMUM OF TEN FOOT (10') HORIZONTAL SEPARATION OR 18" VERTICAL SEPARATION WHERE UNDERGROUND SERVICES CONFLICT. PIPE MEASUREMENTS ARE TO CENTER OF STRUCTURES AND ALL LENGTHS ARE PLUS OR MINUS.

I. WATERMAINS: ALL NEW WATERMAINS, PIPES, FITTINGS, VALVES, PACKING AND JOINTING MATERIALS SHALL CONFORM WITH ALL APPLICABLE AWWA STANDARDS AND THE STATE PLUMBING CODE AND SHALL BE INSTALLED IN ACCORDANCE WITH APPLICABLE AWWA STANDARDS AND/OR THE MANUFACTURER'S RECOMMENDED PROCEDURES. ALL WATER MAIN PIPES AND FITTINGS SHALL CONTAIN NO MORE THAN EIGHT PERCENT LEAD. ALL STONES FOUND IN WATER MAIN TRENCHES SHALL BE REMOVED TO A DEPTH OF AT LEAST SIX INCHES BELOW THE BOTTOM OF THE PIPE. CONTINUOUS AND UNIFORM BEDDING TO BE PROVIDED AND BACKFILL MATERIAL SHALL BE TAMPED IN LAYERS AROUND THE PIPE AND FITTINGS AND TWELVE INCHES (12") ABOVE THE TOP OF THE PIPE TO ADEQUATELY SUPPORT AND PROTECT THE PIPE. ALL NEW WATER MAINS SHALL BE PRESSURE AND LEAK TESTED PER AWWA STANDARD C600 AND DISINFECTED PER AWWA STANDARD C651 AND RULE 62.555.345,F.A.C. ALL FOUR INCH (4") AND LARGER WATER MAINS TO BE C–900 P.V.C. AND ALL WATER MAINS SMALLER THAN 4" TO BE SCHEDULE 40 P.V.C. WATER MAIN TO BE 2.5' (MIN.) BELOW PROPOSED GRADE.

J. SANITARY SEWERS: ALL SANITARY SEWER MAINS TO BE SDR–35 PVC.

K. TREE BARRICADES AND EROSION CONTROL: ALL EROSION CONTROL MEASURES (SILT BARRIERS) AND TREE BARRICADES MUST BE INSTALLED PRIOR TO THE START OF CONSTRUCTION AND REMAIN IN PLACE THROUGHOUT CONSTRUCTION. ENCROACHMENT OR FAILURE TO MAINTAIN THESE BARRICADES COULD RESULT IN ENFORCEMENT ACTION WHICH MAY INCLUDE CITATIONS AND/OR PERMIT REVOCATION. SILTATION BARRIERS SHALL BE MAINTAINED AND REPAIRED AT THE END OF EACH WORKING DAY. HAY BALES SHALL BE INSTALLED ONCE PERIMETER GRADING IS COMPLETED. STORMWATER FACILITIES SHALL HAVE HAY BALES PLACED AROUND THEIR ENTRANCES TO PREVENT SEDIMENT FROM BEING TRANSPORTED INTO THE STORMWATER SYSTEM. HAY BALES SHALL BE PLACED ALONG THE PERIMETER OF ALL DOWNSTREAM BOUNDARIES TO PROVIDE FILTRATION OF RUNOFF DURING CONSTRUCTION. THE HAY BALES SHALL REMAIN IN PLACE UNTIL THE ENGINEER HAS APPROVED THE VEGETATIVE COVER ALONG EMBANKMENTS PROVIDING RUNOFF TO THE PERIMETER. IT IS THE CONTRACTOR'S RESPONSIBILITY TO MAINTAIN SOIL EROSION CONTROL DEVICES. IF AT ANY TIME DRAINAGE STRUCTURES OR EROSION CONTROL DEVICES BECOME DAMAGED OR INOPERABLE, IT IS THE CONTRACTORS RESPONSIBILITY TO REPAIR THEM. THE CONTRACTOR IS EXPECTED, AT THE END OF EACH DAY, TO HAVE THE SITE GRADED IN SUCH A WAY THAT ADJACENT PROPERTIES ARE NOT ADVERSELY IMPACTED BY EROSION OR SEDIMENT LEAVING THE SITE. CLEARED AREAS SHALL BE STABILIZED EARLY IN THE CONSTRUCTION PROCESS AND IF NATURAL PRECIPITATION DOES NOT PROVIDE PERIODIC WETTING OF THE SITE, THEN THE CONTRACTOR SHALL PROVIDE A METHOD OF SPRAYING THE SITE TO PREVENT WIND EROSION. CONTRACTOR SHALL CLEAR ONLY THAT AREA SHOWN TO BE CLEARED ON THE PLAN. CARE SHALL BE TAKEN TO DISTURB THE EXISTING VEGETATION IN ONLY THOSE AREAS UNDER CONSTRUCTION AT THAT TIME. ALL CLEAR SITE AREAS SHALL BE KEPT FREE OF ANY SIGNAGE, PLANTINGS, TREES, ETC. IN EXCESS OF THREE–AND–A–HALF (3 1/2) FEET IN HEIGHT. DURING LAND ALTERATION AND CONSTRUCTION ACTIVITIES, IT SHALL BE UNLAWFUL TO REMOVE VEGETATION BY GRUBBING OR TO PLACE SOIL DEPOSITS, DEBRIS, SOLVENTS, CONSTRUCTION MATERIAL, MACHINERY OR OTHER EQUIPMENT OF ANY KIND WITHIN THE DRIPLINE OF A TREE TO REMAIN ON THE SITE UNLESS OTHERWISE APPROVED BY THE LOCAL GOVERNMENT. ALL TREE ROOTS EXISTING WITHIN APPROVED IMPROVEMENT AREAS AND ORIGINATING FROM A PROTECTED TREE SHALL BE SEVERED CLEAN AT THE LIMITS OF THE PRESERVED AREA. ALL TRIMMING UNDERTAKEN ON A TREE PROTECTED BY THE PROVISIONS OF THE LAND DEVELOPMENT CODE SHALL BE PRUNED IN ACCORDANCE WITH THE NATIONAL ARBORIST ASSOCIATION (NAA) PRUNING STANDARDS.

L. GRADING AND BACKFILL: THE GRADING SHOWN ON THESE PLANS IS INTENDED TO EXPRESS THE GENERAL GRADING INTENT OF THE PROJECT. THE CONTRACTOR IS EXPECTED TO GRADE THE ENTIRE SITE TO PROVIDE POSITIVE DRAINAGE IN ALL AREAS THROUGHOUT THE SITE. SMOOTH TRANSITIONS SHALL BE PROVIDED BETWEEN CONTOURS OR SPOT ELEVATIONS AS SHOWN ON THE PLANS TO ACCOMPLISH THE GRADING INTENT. ALL SLOPES SHALL BE STABILIZED IMMEDIATELY AFTER FINAL GRADING HAS BEEN COMPLETED. CONTRACTOR TO GRADE PROPERTY SO THAT GRADING MEETS ADJACENT PROPERTY AND RIGHT – OF – WAY ELEVATIONS. CONTRACTOR SHALL NOTIFY THE OWNER AND SEI PRIOR TO DEMOBILIZATION OF GRADING EQUIPMENT TO DETERMINE THAT THE GRADING INTENT HAS BEEN ACHIEVED. ALL FILL MATERIAL SHALL BE SOIL OR SOIL–ROCK MIXTURE WHICH IS FREE FROM ORGANIC MATTER AND OTHER DELETERIOUS SUBSTANCE. IT SHALL BE PREDOMINATELY GRANULAR WITH A MAXIMUM PARTICLE SIZE OF TWO INCHES AND A PLASTICITY INDEX OF 12 OR LESS. ALL BACKFILL WITHIN THE ROADWAY, OVER ANY PIPE THAT IS TO BE INSTALLED UNDER THE ROADWAY OR WITHIN EMBANKMENTS, ETC. IS TO BE COMPACTED TO 100% OF MAXIMUM DENSITY AS DETERMINED BY AASHTO AND PER F.D.O.T. SPECIFICATIONS, SECTION 125.8.3, LATEST EDITION.

M. DRAINAGE: ALL DRAINAGE STRUCTURES MUST BE CONSTRUCTED PER FLORIDA DEPARTMENT OF TRANSPORTATION ROAD DESIGN STANDARDS. MITERED END SECTION AS PER D.O.T. INDEX NO. 272 AND NO. 273. ALL PIPE LENGTHS ARE PLUS OR MINUS AND MEASUREMENTS ARE TO THE CENTER OF STRUCTURES. OWNER SHALL MAINTAIN RETENTION AREAS.

N. DRIVES: ALL DRIVES SHALL BE IN ACCORDANCE WITH FDOT REQUIREMENTS.

O. PAVING: ALL PAVING SURFACES IN INTERSECTIONS AND ADJACENT SECTIONS SHALL BE GRADED TO DRAIN POSITIVELY IN THE DIRECTION SHOWN BY THE FLOW ARROWS ON THE PLANS AND TO PROVIDE A SMOOTH TRANSITION WITH NO BREAKS IN GRADE AND NO STEEP OR REVERSE CROSS SLOPES. AT APPROACHES TO AND INTERSECTIONS WITH EXISTING ROADWAYS, IT MAY BE NECESSARY AND ADVISABLE TO MAKE MINOR LOCAL FIELD ADJUSTMENTS TO ACCOMPLISH THE PURPOSES OUTLINED. IT IS THE CONTRACTORS RESPONSIBILITY TO ENSURE POSITIVE DRAINAGE AND SEI SHALL BE CONSULTED SO THAT WE MAY MAKE ANY AND ALL REQUIRED INTERPRETATIONS OF THE PLANS OR GIVE SUPPLEMENTARY INSTRUCTIONS TO ACCOMPLISH THE INTENT OF THE PLANS. ASPHALTIC CONCRETE TYPE S–1, SHALL CONFORM TO THE FLORIDA DEPARTMENT OF TRANSPORTATION STANDARD SPECIFICATIONS FOR ROAD AND BRIDGE CONSTRUCTION LATEST EDITION, FOR MATERIALS AND METHOD OF CONSTRUCTION. ALL ROADWAY BASES SHALL BE PRIMED AND, IF REQUIRED, A TACK COAT SHALL BE APPLIED. ALL MATERIALS AND CONSTRUCTION METHODS SHALL CONFORM TO THE FLORIDA DEPARTMENT OF TRANSPORTATION STANDARD SPECIFICATIONS FOR ROAD AND BRIDGE CONSTRUCTION, LATEST EDITION. TEST REPORTS FOR SUBGRADE, BASE, ASPHALT AND BASE CORE AND CONCRETE SHALL BE SUBMITTED TO THE ENGINEER OF RECORD FOR REVIEW AND APPROVAL. SEE SPECIFICATIONS FOR SPECIFIC TESTING REQUIREMENTS.

P. LANDSCAPING: ALL PLANT MATERIALS USED SHALL CONFORM TO THE STANDARDS FOR FLORIDA NO. 1 OR BETTER AS GIVEN IN GRADES AND STANDARDS FOR NURSERY PLANTS, PART I, 1963 AND PART II, STATE OF FLORIDA DEPT. OF AGRICULTURE, TALLAHASSEE. ALL PLANT MATERIAL WILL BE GUARANTEED FOR ONE (1) YEAR FROM DATE OF FINAL ACCEPTANCE BY ARCHITECT. PLANTS AND TREES ARE LOCATED BY SCALING OFF PLANS. INSTALLER SHALL INSPECT SITE PRIOR TO BEGINNING PLANTING OPERATIONS AND NOTIFY ARCHITECT OF ANY DISCREPANCIES. INSTALLER SHALL IMMEDIATELY NOTIFY ARCHITECT IF ANY CONFLICTS OCCUR BETWEEN PROPOSED LOCATION OF TREES CALLED FOR ON THE PLANS AND ANY UNDERGROUND UTILITIES OR SUBSURFACE STRUCTURES. INSTALLER SHALL NOTIFY ARCHITECT OF ANY CONDITION THAT WOULD PREVENT THE HEALTHY GROWTH OF PLANT SPECIES CALLED FOR ON THESE PLANS PRIOR TO CONTRACT AWARD. ALL LANDSCAPE AREAS AND GRADED SWALES ARE TO BE SODDED WITH FLORATAM UNLESS NOTED OTHERWISE. THE GROUND IS TO BE PROPERLY PREPARED AND FERTILIZED PRIOR TO LAYING SOD. THERE SHALL BE A CRISP LINE SEPARATING PLANT BEDS FROM ALL SOD AREAS. SOD TO BE STAKED AS NECESSARY TO PREVENT EROSION. CONTRACTOR TO SOD ALL DISTURBED AREAS DUE TO PROPOSED CONSTRUCTION.

Q. PLANTING SOILS: ALL PLANTING PITS SHALL BE BACKFILLED WITH TOPSOIL MIX CONSISTING OF FIFTY (50) PERCENT SAND, FORTY (40) PERCENT MUCK AND TEN (10) PERCENT HUMUS OR PEAT, BY VOLUME, WELL MIXED WITH APPROPRIATE FERTILIZER ADDED.

R. MULCH: ALL EXPOSED AREAS IN PLANTING BEDS, INCLUDING HEDGE ROWS, SHALL BE KEPT WEED FREE AND MULCHED TO A MINIMUM OF THREE (3) INCHES DEPTH, EXCEPT THAT TWO (2) INCHES SHALL BE REQUIRED IN ANNUAL BEDS. MULCH SHALL BE REPLENISHED, AS NEEDED, TO MEET THIS REQUIREMENT.

SEPARATION FOR WATER/ SEWER CONFLICTS

1. SANITARY SEWERS, FORCE MAINS AND STORM SEWERS SHOULD ALWAYS CROSS UNDER WATER MAINS. SANITARY SEWERS, FORCE MAINS AND STORM SEWERS CROSSING WATER MAINS SHALL BE LAID TO PROVIDE A MINIMUM VERTICAL DISTANCE OF 18 INCHES BETWEEN THE INVERT OF THE UPPER PIPE AND THE CROWN OF THE LOWER PIPE WHENEVER POSSIBLE.

   WHERE SANITARY SEWERS, FORCE MAINS AND STORM SEWERS MUST CROSS A WATER MAIN WITH LESS THAN 18 INCHES VERTICAL DISTANCE, BOTH THE SEWER AND THE WATER MAIN SHALL BE CONSTRUCTED OF DUCTILE IRON PIPE (DIP) AT THE CROSSING. SUFFICIENT LENGTHS OF DIP MUST BE USED TO PROVIDE A MINIMUM SEPARATION OF 10 FEET BETWEEN ANY TWO JOINTS. ALL JOINTS ON THE WATER MAIN WITHIN 20 FEET OF THE CROSSING MUST BE LEAK FREE AND MECHANICALLY RESTRAINED. A MINIMUM VERTICAL CLEARANCE OF 6 INCHES MUST BE MAINTAINED AT THE CROSSING.

   WHERE THERE IS NO ALTERNATIVE TO SEWER PIPES CROSSING OVER THE WATER MAIN, THE CRITERIA FOR MINIMUM SEPARATION OF 18 INCHES BETWEEN LINES AND 10 FEET BETWEEN JOINTS SHALL BE REQUIRED.

   ALL CROSSINGS SHALL BE ARRANGED SO THAT THE SEWER PIPE JOINTS AND THE WATER MAIN PIPE JOINTS ARE EQUIDISTANT FROM THE POINT OF CROSSING (PIPES CENTERED ON THE CROSSING).

   WHERE A NEW PIPE CONFLICTS WITH AN EXISTING PIPE, THE NEW PIPE SHALL BE CONSTRUCTED OF DIP AND THE CROSSING SHALL BE ARRANGED TO MEET THE REQUIREMENTS ABOVE.

2. A MINIMUM 10 FOOT HORIZONTAL SEPARATION SHALL BE MAINTAINED BETWEEN ANY TYPE OF SEWER & WATER MAIN IN PARALLEL INSTALLATION WHENEVER POSSIBLE.

   IN CASES WHERE IT IS NOT POSSIBLE TO MAINTAIN 10 FOOT HORIZONTAL SEPARATION THE WATER MAIN MUST BE LAID IN A SEPARATE TRENCH OR ON AN UNDISTURBED EARTH SHELF LOCATED ON ONE SIDE OF THE SEWER OR FORCE MAIN AT SUCH AN ELEVATION THAT THE BOTTOM OF THE WATER MAIN IS AT LEAST 18 INCHES ABOVE THE TOP OF THE SEWER.

   WHERE IT IS NOT POSSIBLE TO MAINTAIN A VERTICAL DISTANCE OF 18 INCHES IN PARALLEL INSTALLATIONS THE WATER MAIN SHALL BE CONSTRUCTED OF DIP AND THE SEWER OR THE FORCE MAIN SHALL BE CONSTRUCTED OF DIP WITH A MINIMUM VERTICAL DISTANCE OF 6 INCHES. THE WATER MAIN SHOULD ALWAYS BE ABOVE THE SEWER. JOINTS ON THE WATER MAIN SHALL BE LOCATED AS FAR APART AS POSSIBLE FROM JOINTS ON THE SEWER OR FORCE MAIN (STAGGERED JOINTS).

3. ALL DIP SHALL BE CLASS 50 OR HIGHER. ADEQUATE PROTECTIVE MEASURES AGAINST CORROSION SHALL BE AS REQUIRED BY THE PERMITTING UTILITIES DEPARTMENT.

PASCO COUNTY NOTES

1. All utility construction shall comply with the Pasco County Standards for Design and Construction of Water and Wastewater Facilities Specifications, latest edition.
2. All on–site water and sewer facilities shall be owned and maintained by the owner–developer.
3. Installation of fuel storage tanks requires review and approval by the Fire Marshal and the issuance of a separate building permit. Approval of the site plan does not constitute approval of the location of the fuel tanks.
4. All proposed signs must be applied for, approved, and permitted on an individual basis apart from any ultimately–approved site plan. Approval of this site plan does not constitute approval of any sign age.
5. Handicap parking spaces will be properly signed and striped in accordance with Florida Statute 316, the Manual on Uniform Traffic Control Devices, or other applicable standards.
6. The architect–engineer certifies that the site has been designed in accordance with the Americans with Disabilities Act.
7. All on–site parking spaces will be striped and signed in accordance with the manual on Uniform Traffic Control Devices, latest edition. Parking spaces, directional arrows, and stop bars shall be striped in WHITE. It shall be the owner/developers' responsibility to properly sign and stripe the site in accordance with applicable standards.
8. The owner/developer acknowledges that this approval does not include any work in County right–of–way. All right–of–way work shall be a function of an approved Pasco County Right–of–Way Use Permit.
9. All clear–site areas shall be kept free of any sign age, plantings, trees, etc. in excess of three–and–a–half (3¬) feet in height.
10. No irrigation system or landscaping shall be installed in any County or State right–of–way without issuance of appropriate right–of–way Use Permit.
11. The owner/developer acknowledges that the site and its subsequent building permits shall comply with all rezoning/MPUD/PUD conditions.
12. All structures, including buffer walls, retaining walls, signage, etc. require separate building permits.

THIS DRAWING AND THE DESIGN SHOWN ARE THE PROPERTY OF SPRING ENGINEERING, INC. AND ARE NOT TO BE REPRODUCED, COPIED, PUBLISHED, OR USED IN WHOLE OR PART WITHOUT WRITTEN CONSENT. THEY ARE TO BE USED ONLY FOR THE SITE AND PROJECT IDENTIFIED AND SHALL BE RETURNED UPON REQUEST.

100%
CONSTRUCTION DOCS.
ISSUE DATE: 02.10.16

REVISIONS		
REV	DATE	DESCRIPTION

NOT VALID WITHOUT SIGNATURE AND ORIGINAL RAISED SEAL OF A FLORIDA LICENSED PROFESSIONAL ENGINEER
YANCEY B. ABUTON
P.E. NO. 63766
DATE

PRISTINE LAKE PRESERVE
Ehren Cutoff and Parkway Blvd
Pasco County, Florida

CONTRACT DATE:
August 20, 2015

SPRING ENGINEERING, INC.
ENGINEERING • LAND PLANNING • ARCHITECTURE
3014 U.S. HWY 19, HOLIDAY, FL (727) 938–1516
FL COA NO. 00005158 & LICENSE NO. AA–C001747

GENERAL NOTES

DESIGNED BY: JAY
DRAWN BY: JAY
CHECKED BY: RPD
JOB NO. 2015-11
SHEET NO. C6.0