CIVIL CONSTRUCTIONS PLANS FOR

O.L.O.R. CATHOLIC CHURCH
A 27.68 ACRE PARCEL LOCATED TO THE NORTHWEST 1/4 OF THE SOUTHWEST 1/4 OF SECTION 29, TOWNSHIP 26 SOUTH, RANGE 19 EAST.

PASCO COUNTY PARCEL I.D. #:29-26-19-0000-01300-0000

THE DRAINAGE PLAN PROVIDED IS BASED ON THE EXISTING FIELD CONDITIONS OF THE ABUTTING PROPERTY.

O.L.O.R. CATHOLIC CHURCH MATER DEI ADDITION LAND O' LAKES, FL

OWNER
DIOCESE OF ST. PETERSBURG
6363 9TH AVENUE N
ST. PETERSBURG 33710
CONTACT: RICK KOLHOFF
PHONE: (727) 341-6840
EMAIL: rjk@dosp.org

ARCHITECT
JCJ ARCHITECTS
2700 N. MACDILL, STE. 212
TAMPA, FL 33607
CONTACT: KEVIN L. JARMAN, AIA
PHONE: (813) 254-0501
EMAIL: kevin@jcjarchitects.com

CIVIL ENGINEER
ADAMS ENGINEERING
27524 CASHFORD CIRCLE,STE 101
WESLEY CHAPEL, FL 33544
CONTACT: TIM D. HODES, P.E.
PHONE: (813) 929-7499
EMAIL: tim.hodes@adams-engineering.com

SURVEYOR
HAMILTON ENGINEERING AND SURVEYING
311 NORTH NEWPORT AVENUE, STE. 100
TAMPA, FL 33606
CONTACT: AARON J. MURPHY, PSM
PHONE: (813) 250-3535
EMAIL: aronm@hamiltonengineering.us

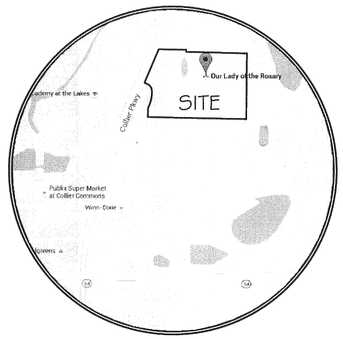

VICINITY MAP
N.T.S.

Sheet List Table	
Sheet Number	Sheet Title
C1.0	COVER SHEET
C1.1	GENERAL NOTES
C1.2	TOPOGRAPHIC SURVEY
C1.3	TOPOGRAPHIC SURVEY
C1.4	TOPOGRAPHIC SURVEY
C1.5	TOPOGRAPHIC SURVEY
C2.0	EROSION CONTROL
C2.1	EROSION CONTROL DETAILS
C2.2	SWPP PLAN
C3.0	DEMOLITION PLAN
C4.0	SITE PLAN
C4.1	ENLARGED SITE PLAN
C4.2	FIRE TRUCK ANALYSIS
C5.0	GRADING PLAN
C5.1	GRADING PLAN
C6.0	DRAINAGE PLAN
C7.0	UTILITY PLAN
C7.1	UTILITY DETAILS
L1.0	LANDSCAPE PLAN
L1.1	LANDSCAPE DETAILS

**** NOTICE TO CONTRACTORS - TOPOGRAPHIC SURVEY ****

TOPOGRAPHIC INFORMATION TAKEN FROM A TOPOGRAPHIC SURVEY PERFORMED BY HAMILTON ENGINEERING AND SURVEYING. THE CONTRACTOR SHALL NOTIFY THE ENGINEER IMMEDIATELY, IN WRITING, OF ANY DISCREPANCIES OR OMISSIONS TO THE TOPOGRAPHIC INFORMATION. THE CONTRACTOR(S) SHALL BE RESPONSIBLE FOR CONFIRMING THE LOCATION (HORIZONTAL/VERTICAL) OF ANY BURIED CABLES, CONDUITS, PIPES, AND STRUCTURES (STORM SEWER, SANITARY SEWER, WATER, GAS, TELEVISION, TELEPHONE, ETC.) WHICH IMPACT THE CONSTRUCTION SITE. THE CONTRACTOR(S) SHALL NOTIFY THE OWNER AND ENGINEER IF ANY DISCREPANCIES ARE FOUND BETWEEN THE ACTUAL CONDITIONS VERSUS THE DATA CONTAINED IN THE CONSTRUCTION PLANS. ANY COSTS INCURRED AS THE RESULT OF NOT CONFIRMING THE ACTUAL LOCATION (HORIZONTAL/VERTICAL) OF SAID CABLES, CONDUITS, PIPES, AND STRUCTURES SHALL BE BORNE BY THE CONTRACTOR. ADDITIONALLY, THE CONTRACTOR(S) SHALL NOTIFY THE OWNER AND ENGINEER IF ANY ERRORS OR DISCREPANCIES ARE FOUND ON THE CONSTRUCTION DOCUMENTS (PS&E), WHICH NEGATIVELY IMPACT THE PROJECT. THE ENGINEER AND OWNER SHALL BE INDEMNIFIED OF PROBLEMS AND/OR COST WHICH MAY RESULT FROM CONTRACTOR'S FAILURE TO NOTIFY ENGINEER AND OWNER.

****NOTICE TO CONTRACTORS - UTILITIES****

THE CONTRACTOR IS SPECIFICALLY CAUTIONED THAT THE LOCATION AND/OR ELEVATION OF ANY EXISTING UTILITIES AS SHOWN ON THESE PLANS ARE BASED ON RECORDS OF THE VARIOUS UTILITY COMPANIES, THE GOVERNING MUNICIPALITY, AND WHERE POSSIBLE, MEASUREMENTS TAKEN IN THE FIELD. THE INFORMATION PROVIDED IS NOT TO BE RELIED ON AS BEING EXACT OR COMPLETE. THE CONTRACTOR MUST CALL THE APPROPRIATE UTILITY COMPANY AT LEAST 48 HOURS BEFORE ANY EXCAVATION TO REQUEST EXACT FIELD LOCATION OF UTILITIES. IT SHALL BE THE RESPONSIBILITY OF THE CONTRACTOR TO RELOCATE ALL EXISTING UTILITIES WHICH CONFLICT WITH THE PROPOSED IMPROVEMENTS SHOWN ON THESE PLANS.

**** FEMA NOTE ****

Flood Statement: According to Community Panel No. 12101C0408F, Dated 09/26/2014, of the Federal Emergency Management Agency, National Flood Insurance Program Map, this property is within flood zone "X", which is not a special flood hazard area. If this site is not within an identified special flood hazard area, this flood statement does not imply that the property and/or the structures thereon will be free from flooding or flood damage. On rare occasions, greater floods can and will occur and flood heights may be increased by man-made or natural causes. This statement shall not create liability on the part of the Surveyor or Engineer.

811 Know what's below. Call before you dig.

***** STOP! CALL BEFORE YOU DIG! *****

As required by the "Underground Facility Damage Prevention and Safety Act" Florida One Call System must be contacted (811) at least 48 hours prior to any excavation operations being performed. It is the Contractor's responsibility to contact Florida One Call System.

THESE PLANS ARE SUBJECT TO REVIEW & APPROVAL BY JURISDICTIONAL ENTITIES.

ZONING HISTORY

ZONING ACTION		DATE
RZ-3537	R-2 to R-4	03/10/1987
SE-4817	Church & Church School	12/07/1994

*****BENCHMARK INFORMATION*****

THE ELEVATIONS SHOWN HEREON ARE BASED ON THE NORTH AMERICAN VERTICAL DATUM OF 1988 (N.A.V.D. 1988) AS ESTABLISHED FROM N.G.S. MONUMENT "P-694", WITH AN ELEVATION OF 79.21 FEET N.A.V.D. 1988

REVISIONS	DATE	BY

This drawing was prepared by Adams Consulting Engineers, Inc. for the use in connection with the service, and shall remain the property of Adams Engineers. The information herein shall be used only for the purpose of performing services and remained and copy for the use of any other purpose or by other use, including (without limitation) reproduction or alteration, is strictly prohibited. Adams Engineers shall be indemnified and indemnify Adams from all claims arising from such use or reuse with unauthorized use.
© Copyright 2016, Adams Engineers

Adams
27524 Cashford Cr. Suite 101 ■ Wesley Chapel, Florida 33544 ■ (813) 929-7499

OUR LADY OF THE ROSARY
MATER DEI ADDITION

COVER SHEET

TIM D. HODES LICENSE No 67017 9-1-16 STATE OF FLORIDA PROFESSIONAL ENGINEER

Certificate Of Authorization: #27614

PROJECT MGR.	-
PROJECT TECH.	RRP
CHECKED BY	TDH
JOB NO.	2009.053
SHEET NO.	C1.0

© Copyright 2016, Adams Engineering

FILE PATH: I:_Projects\2009\2009.053 OLOR Catholic Church\Drawings\Mater Dei Addition\03-Production_Projects\2009\2009.053 OLOR Catholic Church\Drawings\Mater Dei Addition\03-Production\C1.0 COVER SHEET
PLOTTED: Adobe PDF
PLOT TIME: 2:34:21 PM
PLOT DATE: Wednesday, August 31, 2016
PLOTTED BY: Ricardo Ramos
FILENAME: C1.0 COVER SHEET.dwg

GENERAL NOTES

1. All construction shall be in accordance with the governing municipality's and/or agencies' construction standards and specifications where applicable. In the event that the governing municipality's standard details do not apply, applicable State standard construction details and specifications shall govern.

2. The Contractor shall begin work as directed by the Owner/County or the Notice to Proceed.

3. The Contractor shall notify the Owner/County representative of off-site excess spoils sites that are to be utilized.

4. The Contractor is responsible for keeping existing driveways and sidewalks free of mud and debris from the construction at all times.

5. The Contractor shall maintain adequate site drainage during all phases of construction. The Contractor shall use silt fences (or other methods approved by the engineer and County) as required to prevent silt and construction debris from flowing onto adjacent properties. Contractor shall comply with all applicable federal, state, or local erosion, conservation, and siltation ordinances. Contractor shall remove all temporary erosion control devices upon completion of permanent drainage facilities and the establishment of a stand of grass or other growth to prevent erosion.

6. Disturbed areas that are seeded shall be checked periodically to see that grass coverage is properly maintained. All disturbed areas shall be watered, fertilized, and reseeded or resodded, as necessary.

7. All existing fences are to remain unless specified otherwise by the Owners representative. Any damage to fences shall be repaired at Contractor's expense with new and like materials. Temporary construction site security fences are required.

8. The Contractor is responsible for obtaining all necessary permits and approvals prior to and throughout construction.

9. It is the Contractor's responsibility to maintain neat and accurate construction records for the Owner/County's use. The Contractor shall provide the County clean and accurate full size reproducible Record Drawings which clearly describe all construction and any deviations from the plans.

10. Contractor shall not store materials, equipment or other construction items on adjacent properties or adjacent right-of-ways without the prior written consent of the property Owner and the County. All construction waste materials to be removed shall be disposed of at a permitted location off site, unless written approval is obtained from the County.

11. All excavation is unclassified and shall include all materials encountered to include but not be limited to rock, rubble, debris, trash, etc. Unusable excavated material and all waste resulting from site clearing and grubbing shall be disposed of off site at the Contractor's expense unless otherwise specified or agreed to by Owner.

12. The Contractor shall take all available precautions to control dust. Contractor shall control dust by sprinkling water, or by other means, approved by the County and Engineer.

13. Contractor shall be responsible for all required construction surveying, quality control, and materials testing.

14. All efforts shall be made to avoid damage to existing trees that are to remain. Trees shall be trimmed and painted only if necessary for the safe maneuvering of construction equipment. Contractor shall receive prior approval from the Owner's field representative for removal of any trees. When excavating around a tree, the roots shall be clean cut prior to any excavation work. Do not snag and tear tree roots.

15. All adjacent property damaged by the proposed construction shall be restored to equal or better condition than which it was found before such work was undertaken (non-pay item).

16. All shop drawings and submittals shall be proofread and reviewed by the General Contractor for approval prior to submittal to the Engineer. Subcontractor / General Contractor shall clearly indicate, mark, highlight, and properly clarify products to be considered for approval. Submittals not proofread or reviewed or clarified properly shall be returned unreviewed. Contractor shall resubmit shop drawings and allow for suitable review time. Suitable review time shall be ten (10) working for typical submittals and longer depending on the size and nature of the submittal.

UTILITY NOTES

1. The Contractor shall be responsible for locating all utilities, whether private or public, prior to mobilization. Contractor shall visit the site and make all necessary observations and inspections to familiarize themselves with the site and the site facilities. The information and data shown with respect to existing underground facilities at or contiguous to the site is approximate and based on information furnished by the Owners of such underground facilities or on physical appurtenances observed in the field. The Owner and engineer shall not be responsible for the accuracy or completeness of any such information or data; and, the Contractor, shall have full responsibility for reviewing and checking all such information and data, for locating all underground facilities, for coordination of the work with the Owners of such underground facilities during construction, for the safety and protection thereof, and repairing any damage thereto resulting from the work. The cost of all will be considered as having been included in the contract price.

2. The Contractor shall notify all affected utility companies or agencies in writing at least 1 week prior to beginning construction. The Contractor shall be responsible for and make arrangements for any and all temporary utilities, permits, and agreements.

3. The Contractor shall salvage all existing utilities (including signs, valves, fire hydrants, etc.) in accordance with agency requirements and provide to the governing agency.

4. The Contractor shall protect all existing power poles, signs, manholes, telephones risers, water valves, utilities, etc. during all construction phases. Contractor will be responsible to replace any damaged items and restore any services that have been disturbed. All manholes, clean-outs, water valves, fire hydrants and other appurtenances must be adjusted to final grade before the Owner will accept the work. The Contractor shall give the County and/or residents and businesses affected by any anticipated water or sewer service disruptions at least forty-eight (48) hours prior notice.

5. Contractor shall exercise caution and maintain adequate clear zone between the Contractor's equipment and any power lines.

6. Contractor shall comply to the fullest extent with the latest OSHA standards for excavation and trenching procedures. Contractor shall use support systems, sloping, benching, etc. as necessary for these operations, and shall comply with all OSHA performance criteria.

7. Contractor shall, in base bid provide all necessary fittings and appurtenances required to complete all connections, resolve utility conflicts and other incidental utility work shown on the plans or contained in the specifications or required by governing agencies to include, but not limited to temporary services: valves, boxes, meters, backflow preventors, fire department connections, etc. including the repair or replacement of any existing irrigation system. Contractor shall raise/lower or adjust all existing utility mains in conflict with proposed utilities as part of the base bid for all known or unknown lines.

8. All utilities within 5' of proposed building(s) shall adhere to the MEP's recommendations and or requirements. Contractor shall provide storm drain connections for all roof drain lines. Refer to MEP's plans and related technical specifications. Civil utilities (water, sanitary sewer & storm sewer) limits begin 5' outside the building. In the event of a conflict with the MEP's within this area, the MEP's requirements shall govern.

9. Testing of utility trench backfill compaction shall be at 25' intervals and each lift's backfill. Backfill shall be processed such that no dirt clods are in excess of 2" diameter. All sanitary sewer lines and storm sewer lines shall be TV tested at the completion of the project (in addition to minimum Code or other requirements) to check for damage caused by other trades, utility conflicts, trench settlement, etc. The cost of such shall be included in the contractors base price.

10. Lighting fixtures, bases, poles, conduit, and wiring are by the General Contractor.

11. Proposed utilities are shown in schematic only. Exact locations shall be determined to allow for propert fit and the most proper economical installation.

12. All water and sewer construction to be in accordance with the utility provider's construction standards and specification, and to all applicable codes.

13. Storm sewer shall be RCP with gasket joints per FDOT standards, unless approved by the engineer.

DEMOLITION NOTES

1. No earth-disturbing activities shall commence until all permits are obtained and perimeter erosion control measures are in place.

2. All demolition shall be closely coordinated with the owner's representative regarding items to be salvaged, those to be removed, etc. including any and all tree preservation and transplanting activities, as outlined in the pre-construction meeting. Removal, relocation and/or disposal of any pre-existing on-site trash, debris, or stockpiles shall be included in the total cost of demolition and shall be coordinated with the owner's representative at all times.

3. The contractor shall create ample staging and stockpiling areas for the deliveries of construction materials, concrete deliveries, topsoil, etc. in accordance with the owner's representative and the project specifications.

4. The contractor shall incur all costs for maintenance and repair of the existing fences to remain, irrigation systems to remain, utility lines, etc, as outlined in the specifications.

5. Ingress and egress points, proposed disposal sites, and haul routes must be approved by local officials prior to removal of demolition debris off-site.

6. Contractor shall comply to the fullest extent with all regulations governing agencies regarding the demolition, removal, transportation and disposal of all demolition debris.

7. The contractor shall locate and remove all underground utility cables (electric, telephone, etc.) up to a depth of 24 inches below grade as part of the base bid.

8. The contractor shall locate and remove all underground utility piping, conduit, and cables, regardless of depth, in the area of the proposed building(s) foundations.

9. Contractor shall comply to the fullest extent with the latest OSHA standards for excavation and trenching procedures. Contractor shall use support systems, sloping, benching, etc. as necessary for these operations, and shall comply with all OSHA performance criteria.

10. The contractor shall assume responsibility for the protection of all property corner monuments, benchmarks, control points, etc, and shall have, at his expense, all corner monuments replaced which are disturbed by construction activities.

11. Notes shown hereon regarding specific items of demolition are general in nature, and are not intended to be wholly inclusive. The contractor shall demolish and remove all existing improvements to the satisfaction of the owner, as necessary for the construction of the proposed improvements, and to the extent as noted in the specifications.

12. The contractor shall be responsible for coordinating disconnection of all utilities serving the existing site with the appropriate utility company, and shall obtain approval from same to commence demolition activities.

13. The contractor shall be responsible for plugging, capping, or otherwise terminating utility service lines at existing meter locations, cleanouts, etc. a min. distance of 1 foot outside the limits of the tract shown.

FOUNDATION DRAINAGE

1. The contractor shall provide and install at minimum a 2-foot wide free-draining granular backfill zone immediately behind the wall to within 2 foot of final grade or in accordance with Geotechnical or Structural recommendations. The Contractor shall install sloped drain pipe to provide positive gravity drainage to a sump location (with pump) or connection(s) to the gravity system. Foundation drains shall be made of perforated smooth interior wall rigid plastic pipe at least 4" in diameter. Drain lines shall be installed behind walls or where indicated on the plans and shall be installed at least 2 feet below the base of wall or adjoining below-grade floor slabs. Gravel shall be free draining, uniformly graded granular material with less than 5 percent passing the No. 200 US sieve. Gravel shall be surrounded with a suitable woven filter fabric per manufacturer's recommendations with an open area of 40 percent. Should the backfill be exposed to weather by design, the upper 2 foot of the backfill zone shall consist of compacted cohesive material as approved by the engineer or testing firm.

EARTHWORK NOTES

1. Placement of topsoil to within 0.10' of finish grade. See topsoil specification should imported material be necessary.

2. As a result of the site geology and proposed site plan, the Contractor shall establish a soil management plan/operation throughout the construction process. All topsoil shall be salvaged and stockpiled on-site. Stockpiled topsoil may become sterile and non-fertile over time. The Contractor shall amend and supplement the stockpiled topsoil as necessary to yield a fertile topsoil supply. The Contractor's bid shall include all necessary topsoil (import may be required) as required to backfill and crown all landscape all islands and landscape areas. The lack of available on-site topsoil will not be grounds for a Change Order or additional pay.

PAVING NOTES

1. The Contractor shall be responsible for the cost of all failing density tests. In addition, the Contractor shall provide the Owner five (5) passing site pavement cores for the Owners use in the Owner's testing for thickness. Core locations shall be designated by the Owner. Contractor shall patch core holes and finish with like and matching materials. Contractor shall be responsible for any additional testing costs should the above tests fail minimum criteria as established by the Department of Transportation (DOT). Any non-conforming paving shall be replaced or resolved in accordance with DOT specifications.

2. All earthwork and subgrade preparation shall be in accordance with the Geotechnical Investigation and those recommendations listed within the report. Refer to this report for all earthwork and related items. Refer to Structural for building prep. The report references agency/industry standards. In the event that there is a question or dispute between governing specifications, the most stringent shall apply such that the owner receives the most advantageous finished product.

3. Asphalt & base for site paving shall conform to the latest DOT specifications.

4. All reinforcing steel and dowel bars in pavement shall be supported and maintained at the correct clearances by the use of bar chairs or other approved support.

5. The Contractor is solely responsible for performing all construction layouts from the site layout control points and from the dimensions shown. The Contractor must notify the engineer of any discrepancies in advance and allow for the engineer's response before proceeding with the work.

6. Unless otherwise noted, all concrete pavement shall be minimum 4,000 PSI compressive strength (at 28 days) & reinforced with #3 (Grade 60 deformed bars) bars at 18" O.C.E.W. Fire Lanes, parking stalls, and roadway stripping & markings shall conform to governing standards. Sidewalks within landscape areas shall be minimum 4" thick. All joints (expansion, isolation, contraction, & construction) for concrete paving and incidental cracks shall be sealed with self leveling polyurethane sealant and installed in accordance with the American Concrete Pavement Association (ACPA) recommendations. Contractor shall observe the architectural and structural jointing layouts. In the event of a discrepancy or conflict for site paving, the Contractor shall refer to ACPA publication IS061.01P and IS400.01P for the joint specifications and the layout of pavement joints (non-pay item).
Joint Spacing shall be as follows:
5 inch pavement thickness - 10' joint spacing
6+ inch pavement thickness - 12' joint spacing
In areas where pavement thicknesss varies, the shorter joint spacing shall govern.

7. It shall be the responsibility of the Contractor to supply the engineer with a concrete mix design at the pre-construction meeting for review and approval. The cost of this design shall be included in the unit price of pavement material. Fly Ash is not permitted as a substitute for cement.

8. Contractor shall adjust all utilities (existing and proposed) to final grade (non-pay item). All utilities and appurtenances shall be extended up to final grade. Utility clean-outs, valves, manholes, etc. located within paved areas shall be paved monolithic with no block-outs. In non-paved areas, said appurtenances shall have a 4" thick concrete pad extending 12" beyond said appurtenance (block out) poured at final grade for protection against damage from mowing and maintenance equipment. Contractor shall place irrigation and other sleeves prior to any paving, per the irrigation plan, or as directed by the Owner's representative with the curbs scored to identify the sleeve locations.

9. The Contractor shall use care during compaction activities so as not to adversely affect landscape areas. After compaction and prior to placing landscaping, the upper twelve inches (12") of all landscaped areas shall be aerated, tilled, or otherwise processed so as to promote healthy root growth for turf and other vegetation. The Contractor will be responsible for any repairs, undercutting, removal, disposal, and backfilling of these areas if stabilization is discovered (non-pay item).

10. All pavement within 5' of proposed building(s) shall adhere to the structural recommendations and or Architectural requirements. Refer to structural and architectural plans and related technical specifications. Civil pavement limits begin 5' outside the building. In the event of of a conflict with the Structural and/or Architectural within this area, the Structural/Architect requirements shall govern.

PASCO COUNTY SITE PLAN NOTES

1. ALL UTILITY CONSTRUCTION SHALL COMPLY WITH PASCO COUNTY STANDARDS FOR DESIGN AND CONSTRUCTION OF WATER AND WASTEWATER FACILITIES SPECIFICATIONS, LATEST EDITION.
2. ALL ON-SITE WATER AND SEWER FACILITIES SHALL BE OWNED AND MAINTAINED BY THE OWNER-DEVELOPER.
3. INSTALLATION OF FUEL STORAGE TANKS REQUIRES REVIEW AND APPROVAL BY THE FIRE MARSHAL AND THE ISSUANCE OF A SEPARATE BUILDING PERMIT. APPROVAL OF THE SITE PLAN DOES NOT CONSTITUTE APPROVAL OF THE LOCATION OF THE FUEL TANKS.
4. ALL PROPOSED SIGNS MUST BE APPLIED FOR, APPROVED, AND PERMITTED ON AN INDIVIDUAL BASIS APART FROM ANY ULTIMATELY APPROVED SITE PLAN. APPROVAL OF THIS SITE PLAN DOES NOT CONSTITUTE APPROVAL OF ANY SIGNAGE.
5. HANDICAP PARKING SPACES WILL BE PROPERLY SIGNED AND STRIPED IN ACCORDANCE WITH FLORIDA STATUE 316, THE MANUAL ON UNIFORM TRAFFIC CONTROL DEVICES, OR OTHER APPLICABLE STANDARDS.
6. THE ARCHITECT/ENGINEER CERTIFIES THAT THE SITE HAS BEEN DESIGNED IN ACCORDANCE WITH THE AMERICANS WITH DISABILITIES ACT.
7. ALL ON-SITE PARKING SPACES WILL BE STRIPED AND SIGNED IN ACCORDANCE WITH THE MANUAL ON UNIFORM TRAFFIC DEVICES, LATEST EDITION. PARKING SPACES, DIRECTIONAL ARROWS, AND STOP BARS SHALL BE STRIPED IN WHITE. IT SHALL BE THE OWNER/DEVELOPER'S RESPONSIBILITY TO PROPERLY SIGN AND STRIPE IN ACCORDANCE WITH APPLICABLE STANDARDS.
8. THE OWNER/DEVELOPER ACKNOWLEDGES THAT THIS APPROVAL DOES NOT INCLUDE ANY WORK IN THE COUNTY RIGHT-OF-WAY. ALL RIGHT-OF-WAY WORK SHALL BE A FUNCTION OF AN APPROVED PASCO RIGHT-OF-WAY USE PERMIT.
9. ALL CLEAR-SITE AREAS SHALL BE KEPT FREE OF ANY SIGNAGE PLANTINGS, TREES, ETC. IN EXCESS OF THREE-AND-A-HALF (3-1/2) FEET IN HEIGHT.
10. NO IRRIGATION SYSTEM OR LANDSCAPING SHALL BE INSTALLED IN ANY COUNTY OR STATE RIGHT-OF-WAY WITHOUT ISSUANCE OF APPROPRIATE RIGHT-OF-WAY USE PERMIT.
11. THE OWNER/DEVELOPER ACKNOWLEDGES THAT THE SITE AND ITS SUBSEQUENT BUILDING PERMITS SHALL COMPLY WITH ALL REZONING/MPUD/PUD CONDITIONS.
12. ALL STRUCTURES, INCLUDING BUFFER WALLS, RETAINING WALLS, SIGNAGE, ETC. REQUIRE BUILDING PERMITS.

PASCO COUNTY STANDARD FIRE PROTECTION NOTES

1. ALL PROJECTS MUST COMPLY WITH PASCO COUNTY HYDRANT ORDINANCE NO. 46-51.
2. FIRE HYDRANTS SHALL BE INSTALLED AND IN SERVICE PRIOR TO THE ACCUMULATION OF COMBUSTIBLES..
3. PER THE NATIONAL FIRE PROTECTION ASSOCIATION, NFPA-1, 16.4.3.1.3: WHERE UNDERGROUND WATER MAINS AND HYDRANTS ARE TO BE PROVIDED, THEY SHALL BE INSTALLED, COMPLETED, AND IN SERVICE PRIOR TO CONSTRUCTION WORK.
4. PER NFPA-1, 18.3.4.1: CLEARANCES OF 7-1/2 FEET IN FRONT OF AND TO THE SIDES OF THE FIRE HYDRANT WITH A 4-FOOT CLEARANCE TO THE REAR MUST BE MAINTAINED AT ALL TIMES.
5. GATED ENTRIES REQUIRE A SIREN OPERATING SYSTEM OR A 3M OPTICOM SYSTEM FOR EMERGENCY ACCESS.

REVISIONS	DATE	BY

This drawing was prepared by Adams Consulting Engineers, Inc. (Adams) as an instrument of service, and shall remain the property of Adams. The information hereon shall be used only by the client to whom the services are rendered and only for the purpose of constructing or installing the work as shown at the designated location and site. Any other use, including (without limitation) any reproduction or alteration, is strictly prohibited, and the user shall hold harmless and indemnify Adams from all liabilities which may arise from such unauthorized use.
© Copyright 2016, Adams Engineering

Adams
27524 Cashford Cr. Suite 101 ■ Wesley Chapel, Florida 33544 ■ (813) 929-7499

OUR LADY OF THE ROSARY
MATER DEI ADDITION

GENERAL NOTES

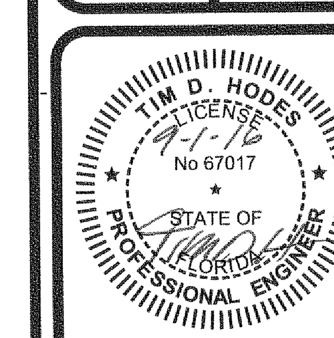

Certificate Of Authorization: #27614

PROJECT MGR.
-
PROJECT TECH.
RRP
CHECKED BY
TDH
JOB NO.
2009.053
SHEET NO.
C1.1

© Copyright 2016, Adams Engineering

FULL PATH: I:_Projects\2009\2009.053 OLOR Catholic Church\Drawings\Mater Dei Addition\03-Production\I:_Projects\2009\2009.053 OLOR Catholic Church\Drawings\Mater Dei Addition\03-Production\C1.1 GENERAL NOTES
PLOTTER: Adobe PDF
PLOT TIME: 3:27:12 PM
PLOT DATE: Wednesday, August 31, 2016
PLOTTED BY: Ricardo Ramos
FILENAME: C1.1 GENERAL NOTES.dwg

NOTE:
WETLAND FLAGED/LOCATED BY DON RICHARDSON WITH ECOLOGICAL CONSULTENTS ON APRIL 1, 2014

CURVE	RADIUS	ARC LENGTH	CHORD LENGTH	CHORD BEARING	DELTA ANGLE
C1	3359.03'	48.70'	48.70'	N 67°24'06" W	0°49'51"
C2	109.12'	116.24'	110.82'	N 32°54'30" W	61°01'55"
C3	504.60'	103.04'	102.86'	N 04°09'19" E	11°41'59"
C4	462.67'	103.51'	103.30'	N 17°06'27" E	12°49'07"
C5	614.00'	52.28'	52.27'	N 22°17'18" E	4°52'44"

NOTE:
THE BOUNDARY INFORMATION SHOWN HEREON IS A RETRACEMENT OF A PREVIOUS SURVEY PREFORMED BY GOODMAN & ASSOCIATES, INC. ON SEPTEMBER 23, 2005

NOTE:
IMPROVEMENTS IN SPECIFIED AREAS AS REQUESTED BY CLIENT WERE SHOWN THIS DATE.

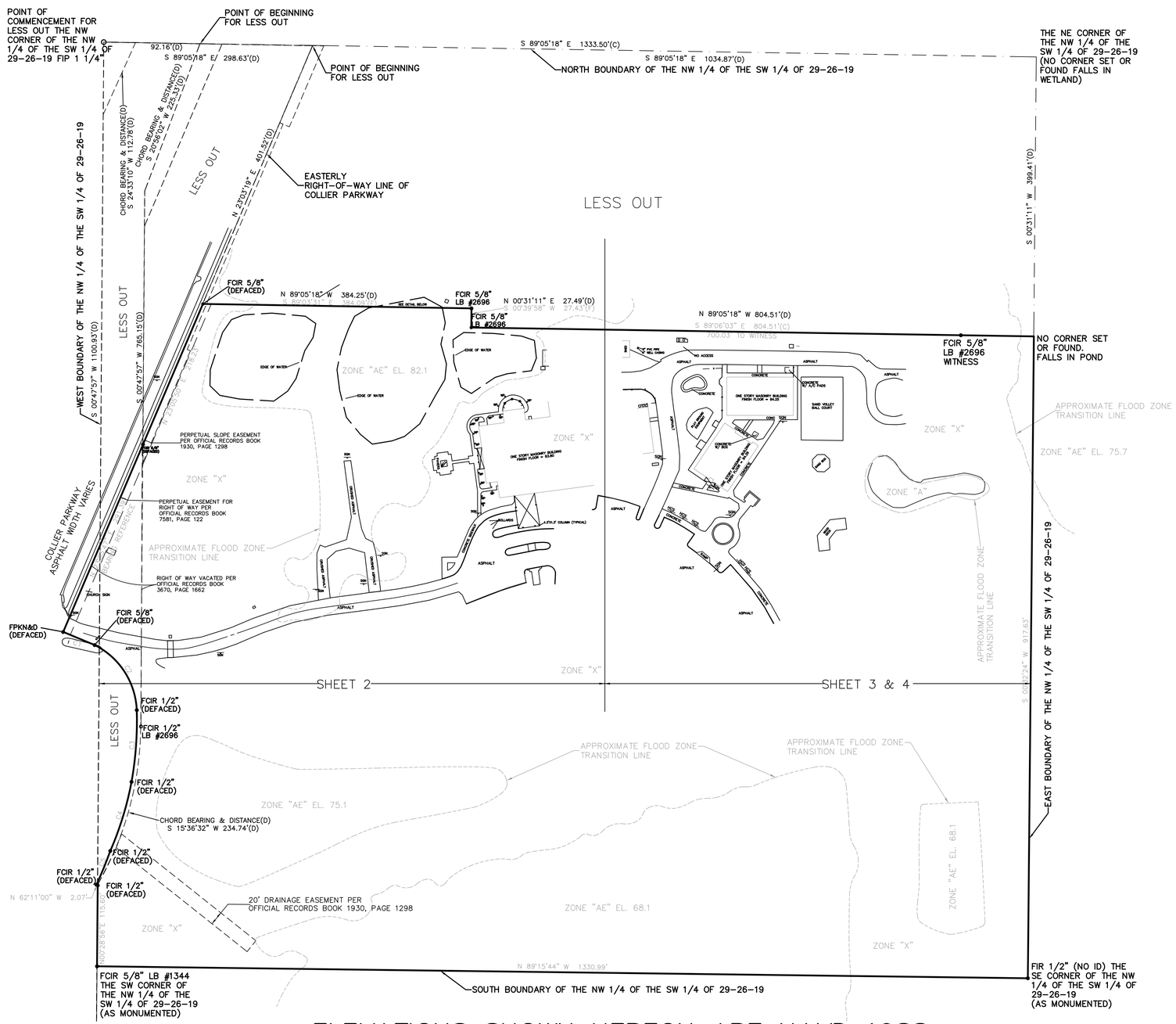

ELEVATIONS SHOWN HEREON ARE NAVD 1988

Surveyor's Notes: (AS APPLICABLE)

ACCORDING TO CURRENT FLOOD INSURANCE MAPS ISSUED BY THE FEDERAL EMERGENCY MANAGEMENT AGENCY, THE PROPERTY SHOWN APPEARS TO LIE WITHIN ZONE "X", "A" AND "AE" PANEL NO. 12101C0408F DATED SEPTEMBER 26, 2014. THE APPROXIMATE FLOOD ZONE TRANSITION, IF APPLICABLE, HAS BEEN OBTAINED AND PLOTTED FROM LARGE SCALE MAPS AND IS DEPICTED AS ACCURATELY AS POSSIBLE. THIS SURVEY BY NO MEANS REPRESENTS A DETERMINATION ON WHETHER PROPERTIES WILL OR WILL NOT FLOOD. LAND WITHIN THE BOUNDARIES OF THIS SURVEY MAY OR MAY NOT BE SUBJECT TO FLOODING; THE BUILDING DEPARTMENT OR OTHER CUSTODIAL AGENCY FOR FLOOD DETERMINATION WITHIN THIS MUNICIPALITY MAY HAVE ADDITIONAL INFORMATION REGARDING FLOODING AND RESTRICTIONS ON DEVELOPMENT.

1) BEARINGS SHOWN HEREON ARE BASED ON THE EASTERLY RIGHT OF WAY LINE OF COLLIER PARKWAY AS SHOWN HAVING A BEARING OF S 23°03'47" W.
2) ELEVATIONS SHOWN HEREON ARE BASED ON NATIONAL GEODETIC SURVEY MONUMENT "P-684 HAVING A PUBLISHED ELEVATION OF 79.21 NAVD88.
3) THERE MAY BE ADDITIONAL EASEMENTS AND/OR RESTRICTIONS AFFECTING THIS PROPERTY THAT MAY NOT BE FOUND IN THE PUBLIC RECORDS OF THIS COUNTY.
4) NO INFORMATION ON ADJACENT PROPERTY OWNERS OR ADJOINING PROPERTY RECORDING INFORMATION WAS PROVIDED TO THIS SURVEYOR.
5) THE SURVEYOR HAS MADE NO INVESTIGATION OR INDEPENDENT SEARCH FOR EASEMENTS OF RECORD, ENCUMBRANCES, RESTRICTIVE COVENANTS, OWNERSHIP TITLE EVIDENCE, OR ANY OTHER FACTS.
6) THE BOUNDARY CORNERS AND LINES DEPICTED BY THIS SURVEY WERE ESTABLISHED PER INFORMATION AS FURNISHED.
7) UNLESS OTHERWISE SHOWN HEREON, NO JURISDICTIONAL WETLAND AREAS OR OTHER PHYSICAL TOPOGRAPHIC FEATURES HAVE BEEN LOCATED.
8) UNDERGROUND ENCROACHMENTS, SUCH AS UTILITIES, STRUCTURES, INSTALLATIONS, IMPROVEMENTS AND FOUNDATIONS THAT MAY EXIST, HAVE NOT BEEN FIELD LOCATED EXCEPT AS SHOWN.
9) THIS MAP DOES NOT DETERMINE OR REFLECT OWNERSHIP OF PROPERTY, BOUNDARY LINES AFFECTED BY ADVERSE USE, LINES OF CONFLICTING DEEDS, OR OTHER LINES THAT MAY OTHERWISE BE DETERMINED BY A COURT OF LAW.
10) UNDERGROUND UTILITY LOCATIONS AND IDENTIFICATIONS SHOWN HEREON ARE BASED UPON VISIBLE ABOVE GROUND APPURTENANCES AND DO NOT NECESSARILY SHOW ALL UTILITY LOCATIONS. NO SUBTERRANEAN EXCAVATION HAS BEEN MADE TO DETERMINE UNDERGROUND UTILITY LOCATIONS.
11) THE MEASURED MATHEMATICAL CLOSURE OF THE SURVEYED BOUNDARY EXCEEDS THE ACCURACY STANDARDS FOR AN URBAN CLASS SURVEY AS DEFINED BY THE AMERICAN CONGRESS ON SURVEYING AND MAPPING AND THE AMERICAN LAND TITLE ASSOCIATION.
12) TIES FROM BUILDING CORNERS, FENCE CORNERS, SHED CORNERS, ETC., ARE NOT TO BE USED TO REESTABLISH PROPERTY BOUNDARIES.
13) ADDITIONS OR DELETIONS TO SURVEY MAPS OR REPORTS MADE BY OTHER THAN THE SIGNING PARTY OR PARTIES IS PROHIBITED WITHOUT WRITTEN CONSENT OF THE SIGNING PARTY OR PARTIES.
14) THIS SURVEY HAS BEEN PREPARED EXPRESSLY FOR THE NAMED ENTITIES AND IS NOT TRANSFERABLE. NO OTHER PERSON OR ENTITY IS ENTITLED TO RELY UPON AND/OR REUSE THIS SURVEY FOR ANY OTHER PURPOSE WHATSOEVER WITHOUT THE EXPRESS WRITTEN CONSENT OF HAMILTON ENGINEERING & SURVEYING AND THE CERTIFYING PROFESSIONAL SURVEYOR AND MAPPER.
15) NOTHING HEREIN SHALL BE CONSTRUED TO GIVE ANY RIGHTS OR BENEFITS TO ANYONE OTHER THAN THOSE CERTIFIED TO ON THIS SURVEY.
16) FENCE OWNERSHIP NOT DETERMINED.
17) PRINTED DIMENSIONS SHOWN ON THE MAP OF SURVEY SUPERSEDE SCALED DIMENSIONS. THERE MAY BE ITEMS DRAWN OUT OF SCALE TO GRAPHICALLY SHOW THEIR LOCATION.
18) REPRODUCTION OF THIS SURVEY IS EXPRESSLY FORBIDDEN WITHOUT THE WRITTEN PERMISSION FROM THE SIGNING SURVEYOR.
19) THE WORD CERTIFIED IS UNDERSTOOD TO BE AN EXPRESSION OF THE PROFESSIONAL SURVEYOR'S OPINION BASED ON HIS BEST KNOWLEDGE, INFORMATION AND BELIEF, AND THAT IT THUS CONSTITUTES NEITHER A GUARANTEE NOR A WARRANTY, EITHER EXPRESSED OR IMPLIED.
20). THIS SURVEY IS A REPRESENTATION OF EXISTING FIELD CONDITIONS AT THE TIME OF THE FIELD SURVEY DATE AND IS BASED ON FOUND EXISTING MONUMENTATION IN THE FIELD.
21) THE TREES SHOWN HEREON WERE LOCATED UTILIZING METHODS ADEQUATE FOR THEIR ACCURATE LOCATION AND IDENTIFICATION. HOWEVER, THIS COMPANY AND THE SIGNING SURVEYOR RESERVES THE RIGHT TO VERIFY THE LOCATION OF ALL TREES CRITICAL TO THE DESIGN OF BUILDINGS, PARKING AND OTHER PERMANENT FEATURES. IT IS THE RESPONSIBILITY OF THE DESIGN PROFESSIONAL TO INFORM THIS COMPANY AND/OR SIGNING SURVEYOR OF ANY TREES CRITICAL TO THEIR DESIGN SO THAT THOSE TREES CAN BE VERIFIED PRIOR TO THE COMPLETION OF THE DESIGN.
22) ALL GROUND ELEVATIONS ARE TO BE INTERPRETED TO THE NEAREST ONE TENTH OF A FOOT.
23) THE DATE OF SIGNATURE DOES UPDATE OR SUPERSEDE THE DATE OF SURVEY.
24) THE WETLANDS SHOWN HEREON WERE DELINEATED BY DON RICHARDSON WITH ECOLOGICAL CONSULTANTS ON APRIL 1, 2014.

COPYRIGHT 2016 – HAMILTON ENGINEERING & SURVEYING, INC.

PARCEL CONTAINS 1,205,476
SQUARE FEET OR 27.68
ACRES MORE OR LESS

DESCRIPTION: (PER TITLE COMMITMENT ORDER NO. 4780852 AND CUSTOMER REFERENCE: DOSP OUR LADY OF THE ROSARY ISSUED BY COMMONWEALTH LAND TITLE INSURANCE COMPANY BEARING AN EFFECTIVE DATE OF APRIL 7, 2014 AT 6:00 AM)

THE NORTHWEST 1/4 OF THE SOUTHWEST 1/4 OF SECTION 29, TOWNSHIP 26 SOUTH, RANGE 19 EAST, PASCO COUNTY, FLORIDA.

LESS ROAD RIGHT-OF-WAY FOR COLLIER PARKWAY AND ALL LANDS WESTERLY THEREOF.

LESS THE FOLLOWING DESCRIBED PARCEL:

COMMENCE AT THE NORTHWEST CORNER OF THE NORTHWEST 1/4 OF THE SOUTHWEST 1/4 OF SECTION 29, TOWNSHIP 26 SOUTH, RANGE 19 EAST, PASCO COUNTY, FLORIDA; RUN THENCE SOUTH 89°05'18" EAST, ALONG THE NORTH BOUNDARY OF THE SAID NORTHWEST 1/4 OF THE SOUTHWEST 1/4 OF SECTION 29, A DISTANCE OF 298.63 FEET TO THE EASTERLY RIGHT-OF-WAY LINE OF COLLIER PARKWAY, THE POINT-OF-BEGINNING; THENCE CONTINUE SOUTH 89°05'18" EAST, ALONG SAID NORTH BOUNDARY, A DISTANCE OF 1034.87 FEET TO THE NORTHEAST CORNER OF THE SAID NORTHWEST 1/4 OF THE SOUTHWEST 1/4 OF SECTION 29; THENCE RUN SOUTH 00°31'11" WEST, ALONG THE EAST BOUNDARY OF THE SAID NORTHWEST 1/4 OF THE SOUTHWEST 1/4 OF SECTION 29, A DISTANCE OF 399.41 FEET; THENCE RUN NORTH 89°05'18" WEST, A DISTANCE OF 804.51 FEET; THENCE RUN NORTH 00°31'11" EAST, A DISTANCE OF 27.49 FEET; THENCE RUN NORTH 89°05'18" WEST, A DISTANCE OF 384.25 FEET TO THE EASTERLY RIGHT-OF-WAY LINE OF COLLIER PARKWAY, THENCE RUN NORTH 23°03'19" EAST, ALONG SAID EASTERLY RIGHT-OF-WAY LINE, A DISTANCE OF 401.52 FEET TO THE POINT-OF-BEGINNING.

ALSO LESS THAT PORTION THEREOF LYING WITHIN THE FOLLOWING DESCRIBED PARCEL CONVEYED TO PASCO COUNTY BY DEED RECORDED IN OFFICIAL RECORDS BOOK 1088, PAGE 639:

A PORTION OF THE SOUTHWEST 1/4 OF SECTION 29, TOWNSHIP 26 SOUTH, RANGE 19 EAST, PASCO COUNTY, FLORIDA, MORE FULLY DESCRIBED AS FOLLOWS:
COMMENCING AT THE NORTHWEST CORNER OF THE SAID SOUTHWEST 1/4 OF SAID SECTION 29, THENCE SOUTH 88°53'27" EAST ALONG THE NORTH LINE OF THE SAID SOUTHWEST 1/4, A DISTANCE OF 45.42' TO THE POINT OF BEGINNING; THENCE CONTINUE SOUTH 88°53'27" EAST ALONG THE SAID NORTH LINE A DISTANCE OF 92.16' TO AN INTERSECTION WITH A CURVE; THENCE SOUTHWESTERLY ALONG A CURVE TO THE LEFT WHOSE RADIUS IS 327.28', A CORD BEARING AND DISTANCE OF SOUTH 20°56'02" WEST, 225.33' TO THE POINT OF TANGENCY; THENCE SOUTH 00°47'57" WEST ALONG A LINE 60.00' EAST OF AND PARALLEL WITH THE WEST LINE OF THE SAID SOUTHWEST 1/4, A DISTANCE OF 765.15' TO A POINT OF A CURVE; THENCE SOUTHERLY ALONG A CURVE TO THE RIGHT WHOSE RADIUS IS 459.26', A CHORD BEARING AND DISTANCE OF SOUTH 15°36'32" WEST, 234.74' TO A POINT ON THE WEST LINE OF THE SAID SOUTHWEST 1/4; THENCE NORTH 00°47'57" EAST ALONG SAID WEST LINE, 1100.93' TO AN INTERSECTION WITH A CURVE; THENCE NORTHEASTERLY ALONG A CURVE TO THE RIGHT, WHOSE RADIUS IS 402.28', A CHORD BEARING AND DISTANCE OF NORTH 24°33'10" EAST, 112.78' TO THE POINT OF BEGINNING.

REVISED TO ADD BOUNDARY INFORMATION AND ADDITIONAL TOPOGRAPHIC INFORMATION MARCH 3, 2016

HAMILTON
ENGINEERING & SURVEYING, INC.
311 NORTH NEWPORT AVENUE, SUITE 100
TAMPA, FL 33606
TEL (813) 250-3535
FAX (813) 250-3636
LB #7013

SHEET TITLE:
MAP OF BOUNDARY & TOPOGRAPHIC SURVEY

OUR LADY OF THE ROSARY
COLLIER PARKWAY LUTZ, FLORIDA
PASCO COUNTY

I hereby certify that this survey meets or exceeds the Minimum Technical Standards as set forth by the Florida Board of Professional Surveyors and Mappers in Chapter 5J-17, Florida Administrative Code, pursuant to Section 472.027, Florida Statutes.

Signature Date

GREGORY D. WHITE, PLS
FLORIDA LICENSE NO. PLS#4466
CERTIFICATE OF AUTHORIZATION LB #7013
Not valid without the signature and the original raised seal of a Florida Licensed Surveyor and Mapper

PREPARED FOR:	DIOCESE OF ST. PETERSBURG
FIELD BOOK/PAGE:	577/61
QUALITY CONTROL FIELD:	ROB
QUALITY CONTROL OFFICE:	RCH
DRAWN BY:	RHF
PARTY CHIEF:	ROB/VINCE
JOB #:	00658.0004
SEC TWP RNG:	29-26-19
SURVEY DATE:	04-03-2014
NOT VALID WITHOUT ALL SHEETS	1 OF 4

I:_Projects\2009\2009.053 OLOR Catholic Church\From-To\From\Hamilton Surveying\2016-03-17_Topo Survey\00658.0003 BOUNDARY AND PARTIAL TOPO 2016.DWG (BOUNDARY SHEET 1) eortiz Mar 17, 2016 – 11:45am

Tree Legend

SYMBOL	NAME	SYMBOL	NAME
□	OAK	○	PINE
○	PALM	✲	OTHER
△	DEAD		

NOTE: TREE SIZES IN INCHES

NOTE:
WETLAND FLAGED/LOCATED BY DON RICHARDSON WITH ECOLOGICAL CONSULTENTS ON APRIL 1, 2014

NOTE:
IMPROVEMENTS SHOWN ON THIS SHEET WERE PREVIOUSLY LOCATED BY HAMILTON ENGINEERING AND SURVEYING ON APRIL 3, 2014

LINE	BEARING	DISTANCE
L1	S 17°25'56" W	41.70'
L2	S 33°47'59" W	21.43'
L3	S 54°13'45" W	24.42'
L4	N 86°29'42" W	49.30'
L5	N 79°23'19" W	28.33'
L6	N 45°49'34" W	19.91'
L7	N 01°10'47" E	22.83'
L8	N 18°18'29" E	56.00'
L9	N 34°32'14" E	22.43'
L10	N 68°51'37" E	18.72'
L11	N 86°29'07" E	40.52'
L12	S 84°42'13" E	47.92'
L13	S 55°08'50" E	18.19'
L14	S 10°42'26" W	20.21'
L15	S 31°55'32" W	22.69'
L16	S 59°06'29" W	23.40'
L17	S 25°45'12" W	20.02'
L18	S 20°47'20" W	28.21'
L19	S 11°30'35" W	32.38'
L20	S 07°19'22" E	29.98'
L21	S 13°59'24" E	39.68'
L22	S 39°27'16" E	31.69'
L23	S 50°54'19" E	21.92'
L24	N 80°43'40" E	28.58'
L25	N 70°16'42" E	18.97'
L26	N 50°34'27" E	28.25'
L27	N 28°53'07" E	45.35'
L28	N 30°23'30" E	27.53'
L29	N 05°39'54" E	22.51'
L30	N 15°45'56" W	28.99'
L31	N 11°23'12" E	31.35'
L32	N 11°18'46" W	22.87'
L33	N 61°22'46" W	29.40'
L34	S 79°05'22" W	80.74'
L35	S 02°10'35" E	32.13'
L36	S 15°50'03" E	36.94'
L37	S 58°50'21" E	17.40'
L38	N 56°00'39" E	41.09'
L39	N 73°11'10" E	18.04'
L40	N 82°57'43" E	34.74'
L41	N 21°48'50" E	19.50'
L42	N 06°23'48" W	25.41'
L43	N 71°22'29" W	19.62'
L44	N 84°40'17" W	39.82'
L45	N 88°10'52" W	42.94'
L46	S 55°30'57" W	18.51'

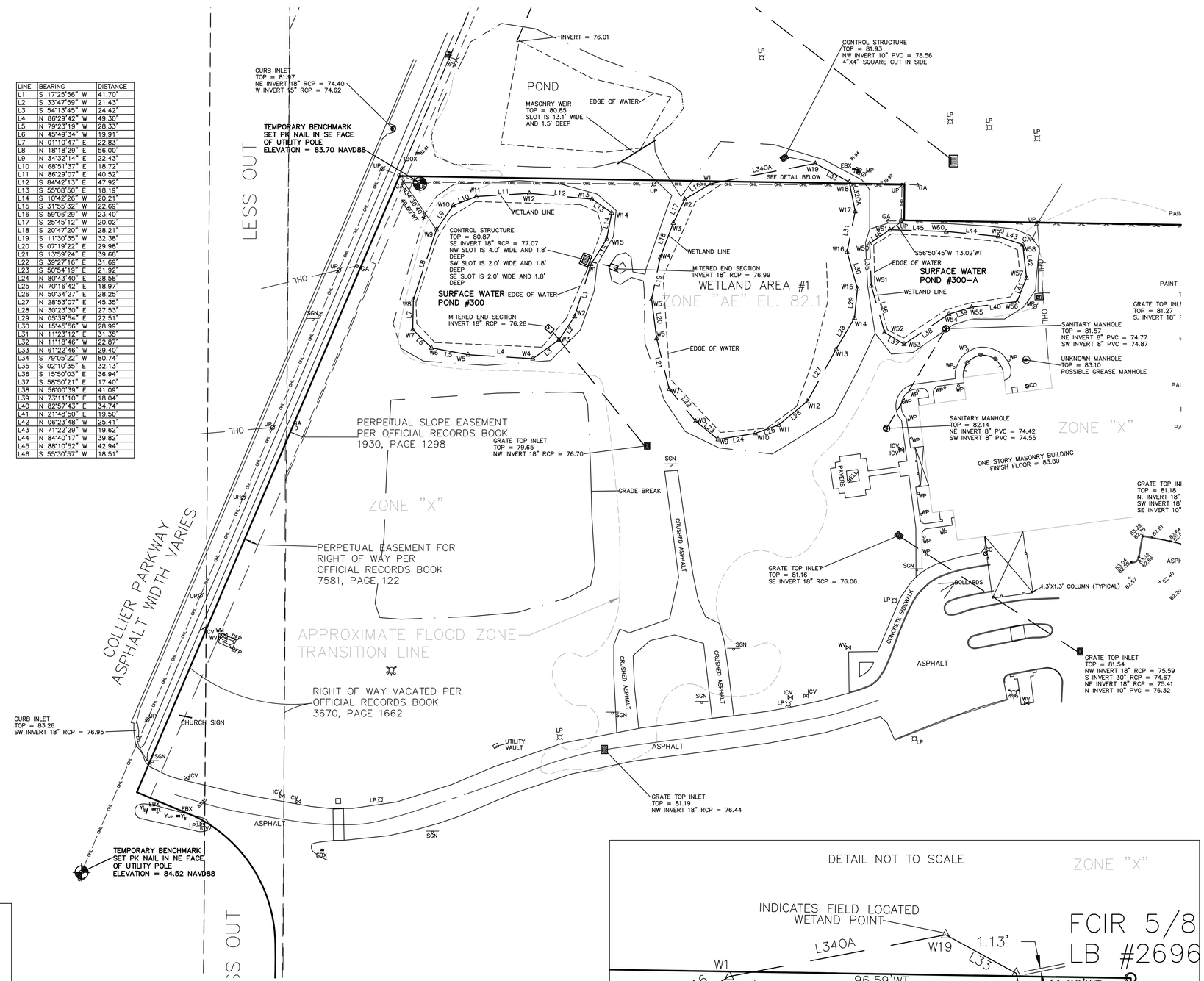

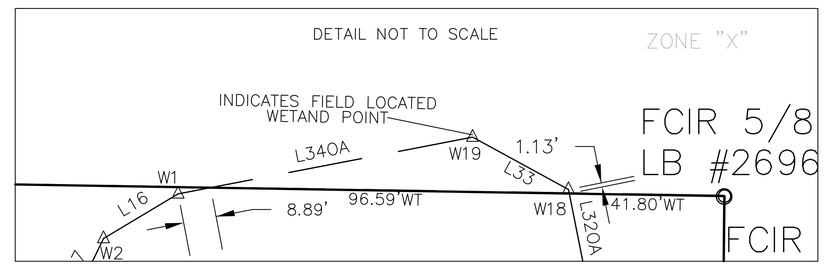

Legend: (AS APPLICABLE)

		OA	OVERALL
SCIR	SET CAPPED IRON ROD 1/2" LB #7013	WT	WETLAND TIE
FCIR	FOUND CAPPED IRON ROD	CO	CLEAN OUT
FIR	FOUND IRON ROD	YL	YARD LIGHT
FCIP	FOUND CAPPED IRON PIPE	MP	METER POLE
FIP	FOUND IRON PIPE	CLF	CHAIN LINK FENCE
FPIP	FOUND PINCHED IRON PIPE	OUL	OVERHEAD UTILITY LINE
SCM	SET CONCRETE MONUMENT (4"X4")	UP	UTILITY POLE
FCM	FOUND CONCRETE MONUMENT	LP	LIGHT POLE
SPKN&D	SET PK NAIL & DISK	GA	GUY ANCHOR
FPKN&D	FOUND PK NAIL & DISK	WP	WOOD POST
FRRS	FOUND RAILROAD SPIKE	SGN	SIGN
PRM	PERMANENT REFERENCE MONUMENT	TOB	TOP OF BANK
WM	WATER METER	TOS	TOE OF SLOPE
ICV	IRRIGATION VALVE	RCP	REINFORCED CONCRETE PIPE
HYD	FIRE HYDRANT	CMP	CORRUGATED METAL PIPE
WV	WATER VALVE	CPP	CORRUGATED PLASTIC PIPE
BFP	BACK FLOW PREVENTER	X 99.99	EXISTING ELEVATION
GI	GRATE INLET	ID	IDENTIFICATION
CI	CURB INLET	LB	LICENSED BUSINESS
MH	MANHOLE	(D)	DESCRIPTION
MES	MITERED END SECTION	(P)	PLAT
		(F)	FIELD
		(NAVD)	NORTH AMERICAN VERTICAL DATUM

ELEVATIONS SHOWN HEREON ARE NAVD 1988

HAMILTON
ENGINEERING & SURVEYING, INC.
311 NORTH NEWPORT AVENUE, SUITE 100
TAMPA, FL 33606
LB #7013
TEL (813) 250-3535
FAX (813) 250-3636

SHEET TITLE:
MAP OF BOUNDARY & TOPOGRAPHIC SURVEY

OUR LADY OF THE ROSARY
COLLIER PARKWAY LUTZ, FLORIDA
PASCO COUNTY

PREPARED FOR: DIOCESE OF ST. PETERSBURG	DRAWN BY: RHF / PARTY CHIEF: ROB/VINCE
FIELD BOOK/PAGE: 577/61	JOB #: 00658.0004
QUALITY CONTROL FIELD: ROB	SEC TWP RNG: 29-26-19
QUALITY CONTROL OFFICE: RCH	SURVEY DATE: 04-03-2014
	NOT VALID WITHOUT ALL SHEETS
	2 OF 4

I:_Projects\2009\2009.053 OLOR Catholic Church\From-To\From\Hamilton Surveying\2016-03-17_Topo Survey\00658.0003 BOUNDARY AND PARTIAL TOPO 2016.DWG (TOPO SHEET 2 ORIGINAL) eortiz Mar 17, 2016 - 11:46am

Tree Legend

SYMBOL	NAME	SYMBOL	NAME
□	OAK	○	PINE
○	PALM	✲	OTHER
△	DEAD		

NOTE: TREE SIZES IN INCHES

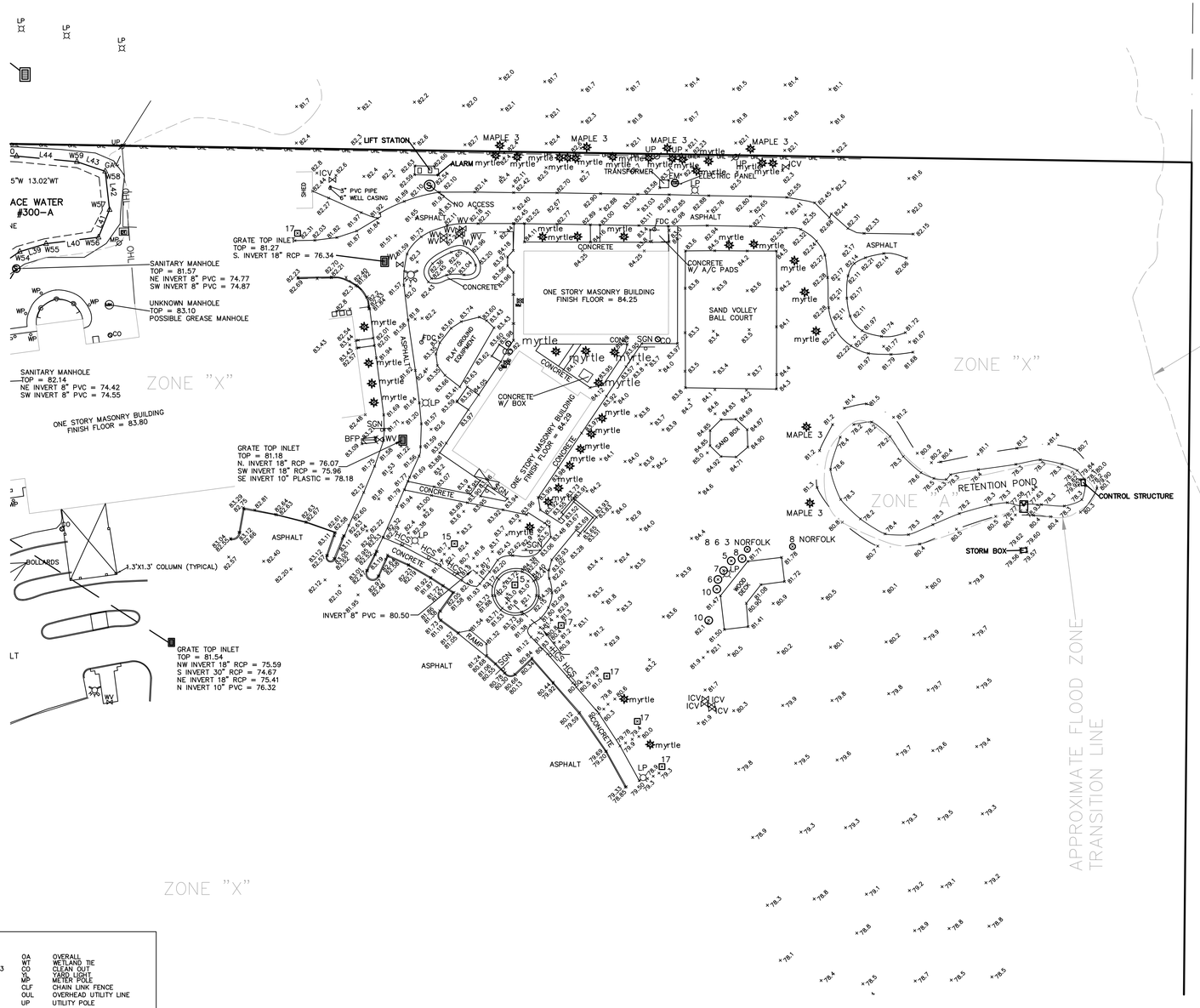

THE NW 1/4 OF THE SW 1/4 OF 29-26-19

NOTE:
IMPROVEMENTS SHOWN ON THIS SHEET ARE NEW LOCATIONS AS REQUESTED BY CLIENT. MARCH 3, 2016

Legend: (AS APPLICABLE)

		OA	OVERALL
		WT	WETLAND TIE
SCIR	SET CAPPED IRON ROD 1/2" LB #7013	CO	CLEAN OUT
FCIR	FOUND CAPPED IRON ROD	YL	YARD LIGHT
FIR	FOUND IRON ROD	MP	METER POLE
FCIP	FOUND CAPPED IRON PIPE	CLF	CHAIN LINK FENCE
FIP	FOUND IRON PIPE	OUL	OVERHEAD UTILITY LINE
FPIP	FOUND PINCHED IRON PIPE	UP	UTILITY POLE
SCM	SET CONCRETE MONUMENT (4"X4")	LP	LIGHT POLE
FCM	FOUND CONCRETE MONUMENT	GA	GUY ANCHOR
SPKN&D	SET PK NAIL & DISK	WP	WOOD POST
FPKN&D	FOUND PK NAIL & DISK	SGN	SIGN
FRRS	FOUND RAILROAD SPIKE	TOB	TOP OF BANK
PRM	PERMANENT REFERENCE MONUMENT	TOS	TOE OF SLOPE
WM	WATER METER	RCP	REINFORCED CONCRETE PIPE
ICV	IRRIGATION VALVE	CMP	CORRUGATED METAL PIPE
HYD	FIRE HYDRANT	CPP	CORRUGATED PLASTIC PIPE
WV	WATER VALVE	X 99.99	EXISTING ELEVATION
BFP	BACK FLOW PREVENTER	ID	IDENTIFICATION
GI	GRATE INLET	LB	LICENSED BUSINESS
CI	CURB INLET	(D)	DESCRIPTION
MH	MANHOLE	(P)	PLAT
MES	MITERED END SECTION	(F)	FIELD
		(NAVD)	NORTH AMERICAN VERTICAL DATUM

ELEVATIONS SHOWN HEREON ARE NAVD 1988

HAMILTON
ENGINEERING & SURVEYING, INC.
311 NORTH NEWPORT AVENUE, SUITE 100
TAMPA, FL 33606
TEL (813) 250-3535
FAX (813) 250-3636
LB #7013

SHEET TITLE:
MAP OF BOUNDARY & TOPOGRAPHIC SURVEY

OUR LADY OF THE ROSARY
COLLIER PARKWAY LUTZ, FLORIDA
PASCO COUNTY

PREPARED FOR: DIOCESE OF ST. PETERSBURG	DRAWN BY: RHF
	PARTY CHIEF: ROB/VINCE
FIELD BOOK/PAGE: 577/61	JOB #: 00658.0004
QUALITY CONTROL FIELD: ROB/VINCE	SEC TWP RNG: 29-26-19
QUALITY CONTROL OFFICE: GDW	SURVEY DATE: 04-03-2014
	NOT VALID WITHOUT ALL SHEETS 3 OF 4

I:_Projects\2009\2009.053 OLQR Catholic Church\From-To\From\Hamilton Surveying\2016-03-17_Topo Survey\00658.0003 BOUNDARY AND PARTIAL TOPO 2016.DWG (ADDITIONAL TOPO 2016 SHEET 3) eortiz Mar 17, 2016 - 11:47am

Tree Legend

SYMBOL	NAME	SYMBOL	NAME
□	OAK	○	PINE
○	PALM	✿	OTHER
△	DEAD		

NOTE: TREE SIZES IN INCHES

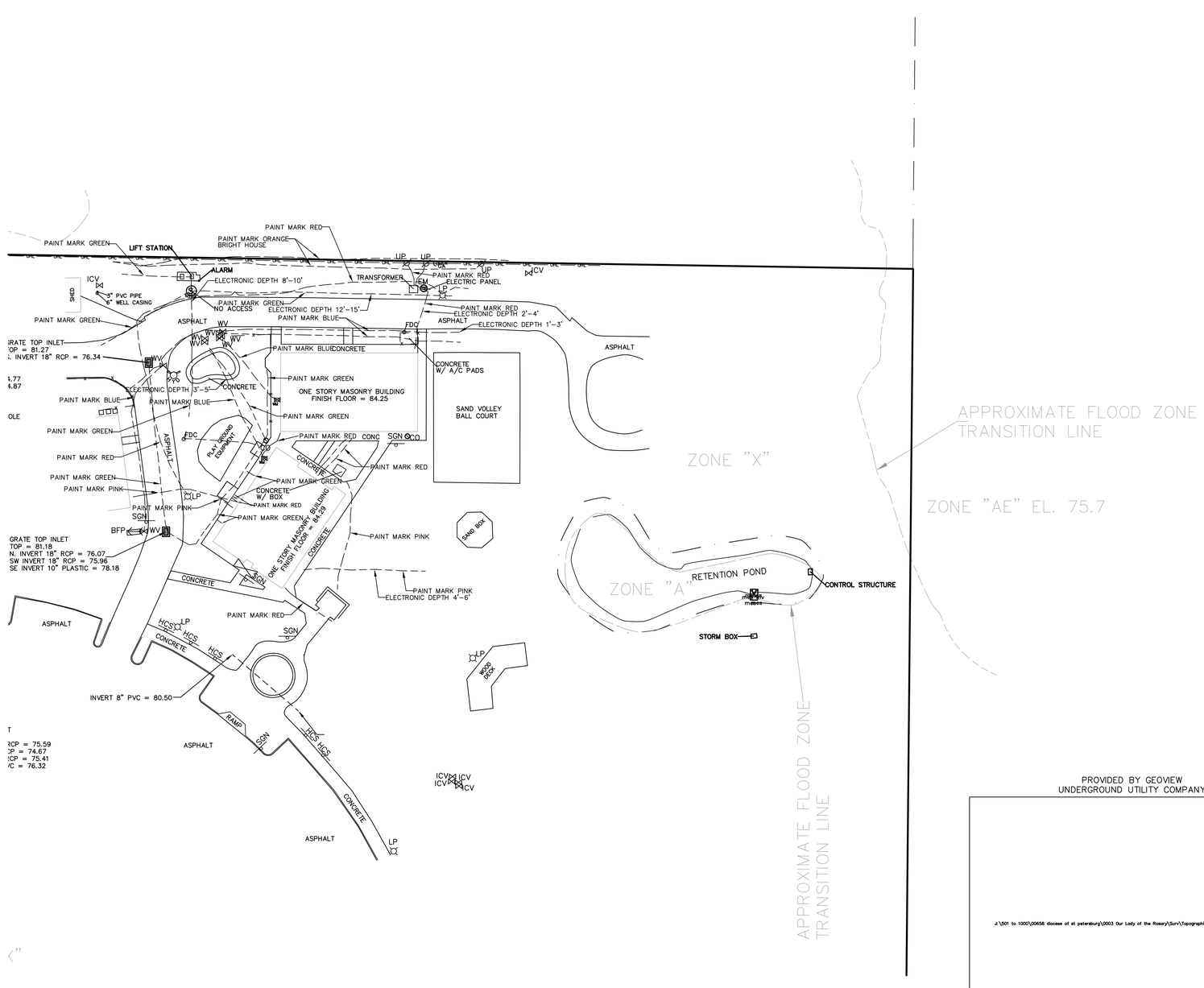

PROVIDED BY GEOVIEW UNDERGROUND UTILITY COMPANY

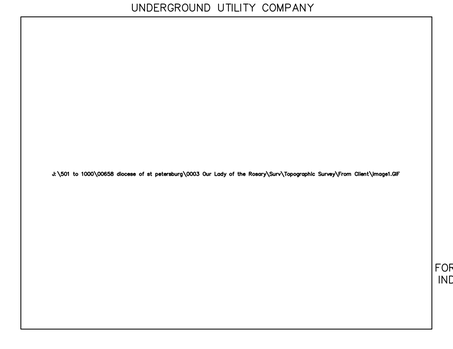

FOR THIS MAP PINK PAINT INDICATES UNKNOWN LINE

NOTE:
THIS SHEET IS TO DETAIL THE UNDERGROUND FOR CLARITY.

Legend: (AS APPLICABLE)

		OA	OVERALL
		WT	WETLAND TIE
SCIR	SET CAPPED IRON ROD 1/2" LB #7013	CO	CLEAN OUT
FCIR	FOUND CAPPED IRON ROD	YL	YARD LIGHT
FIR	FOUND IRON ROD	MP	METER POLE
FCIP	FOUND CAPPED IRON PIPE	CLF	CHAIN LINK FENCE
FIP	FOUND IRON PIPE	OUL	OVERHEAD UTILITY LINE
FPIP	FOUND PINCHED IRON PIPE	UP	UTILITY POLE
SCM	SET CONCRETE MONUMENT (4"X4")	LP	LIGHT POLE
FCM	FOUND CONCRETE MONUMENT	GA	GUY ANCHOR
SPKN&D	SET PK NAIL & DISK	WP	WOOD POST
FPKN&D	FOUND PK NAIL & DISK	SGN	SIGN
FRRS	FOUND RAILROAD SPIKE	TOB	TOP OF BANK
PRM	PERMANENT REFERENCE MONUMENT	TOS	TOE OF SLOPE
WM	WATER METER	RCP	REINFORCED CONCRETE PIPE
ICV	IRRIGATION VALVE	CMP	CORRUGATED METAL PIPE
HYD	FIRE HYDRANT	CPP	CORRUGATED PLASTIC PIPE
WV	WATER VALVE	X 99.99	EXISTING ELEVATION
BFP	BACK FLOW PREVENTER	ID	IDENTIFICATION
GI	GRATE INLET	LB	LICENSED BUSINESS
CI	CURB INLET	(D)	DESCRIPTION
MH	MANHOLE	(P)	PLAT
MES	MITERED END SECTION	(F)	FIELD
		(NAVD)	NORTH AMERICAN VERTICAL DATUM

ELEVATIONS SHOWN HEREON ARE NAVD 1988

HAMILTON
ENGINEERING & SURVEYING, INC.
311 NORTH NEWPORT AVENUE, SUITE 100
TAMPA, FL 33606
TEL (813) 250-3535
FAX (813) 250-3636
LB #7013

SHEET TITLE:
MAP OF BOUNDARY & TOPOGRAPHIC SURVEY

OUR LADY OF THE ROSARY
COLLIER PARKWAY LUTZ, FLORIDA
PASCO COUNTY

DRAWN BY: RHF	PARTY CHIEF: ROB/VINCE
JOB #: 00658.0004	
SEC TWP RNG: 29-26-19	
SURVEY DATE: 04-03-2014	
NOT VALID WITHOUT ALL SHEETS 4 OF 4	
PREPARED FOR: DIOCESE OF ST. PETERSBURG	
FIELD BOOK/PAGE: 577/61	
QUALITY CONTROL FIELD: ROB/VINCE	
QUALITY CONTROL OFFICE: GDW	

J:_Projects\2009\2009.053 OLOR Catholic Church\From-To\From\Hamilton Surveying\2016-03-17_Topo Survey\00658.0003 BOUNDARY AND PARTIAL TOPO 2016.DWG (UNDERGROUND SHEET 4) ecortiz Mar 17, 2016 - 11:47am

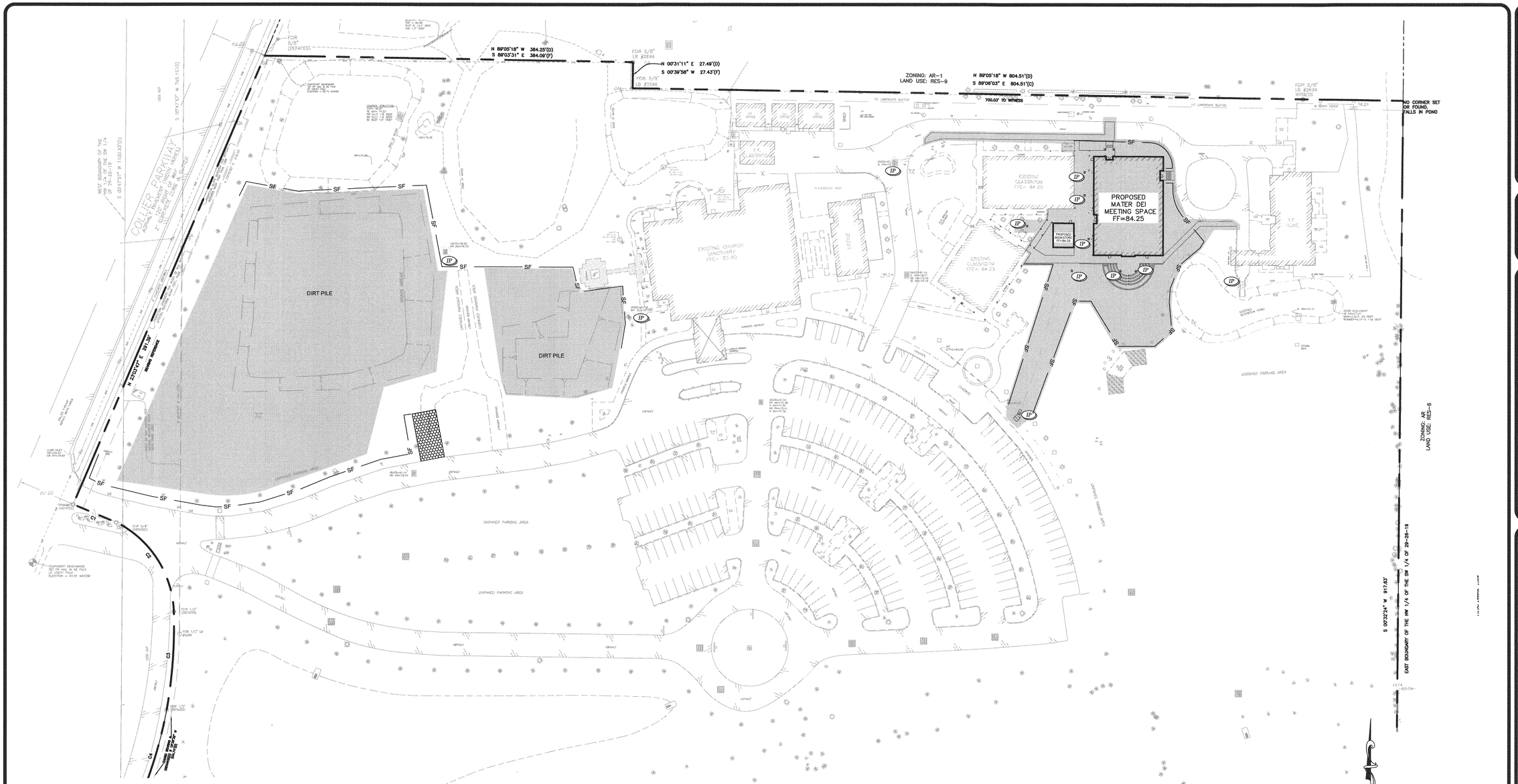

NOTICE TO CONTRACTORS - UTILITIES

THE CONTRACTOR IS SPECIFICALLY CAUTIONED THAT THE LOCATION AND/OR ELEVATION OF ANY EXISTING UTILITIES AS SHOWN ON THESE PLANS ARE BASED ON RECORDS OF THE VARIOUS UTILITY COMPANIES, THE GOVERNING MUNICIPALITY, AND WHERE POSSIBLE, MEASUREMENTS TAKEN IN THE FIELD. THE INFORMATION PROVIDED IS NOT TO BE RELIED ON AS BEING EXACT OR COMPLETE. THE CONTRACTOR MUST CALL THE APPROPRIATE UTILITY COMPANY AT LEAST 48 HOURS BEFORE ANY EXCAVATION TO REQUEST EXACT FIELD LOCATION OF UTILITIES. IT SHALL BE THE RESPONSIBILITY OF THE CONTRACTOR TO RELOCATE ALL EXISTING UTILITIES WHICH CONFLICT WITH THE PROPOSED IMPROVEMENTS SHOWN ON THESE PLANS.

** NOTICE TO CONTRACTORS - TOPOGRAPHIC SURVEY **

TOPOGRAPHIC INFORMATION TAKEN FROM A TOPOGRAPHIC SURVEY PERFORMED BY HAMILTON ENGINEERING AND SURVEYING. THE CONTRACTOR SHALL NOTIFY THE ENGINEER IMMEDIATELY, IN WRITING, OF ANY DISCREPANCIES OR OMISSIONS TO THE TOPOGRAPHIC INFORMATION. THE CONTRACTOR(S) SHALL BE RESPONSIBLE FOR CONFIRMING THE LOCATION (HORIZONTAL/VERTICAL) OF ANY BURIED CABLES, CONDUITS, PIPES, AND STRUCTURES (STORM SEWER, SANITARY SEWER, WATER, GAS, TELEVISION, TELEPHONE, ETC.) WHICH IMPACT THE CONSTRUCTION SITE. THE CONTRACTOR(S) SHALL NOTIFY THE OWNER AND ENGINEER IF ANY DISCREPANCIES ARE FOUND BETWEEN THE ACTUAL CONDITIONS VERSUS THE DATA CONTAINED IN THE CONSTRUCTION PLANS. ANY COSTS INCURRED AS THE RESULT OF NOT CONFIRMING THE ACTUAL LOCATION (HORIZONTAL/VERTICAL) OF SAID CABLES, CONDUITS, PIPES, AND STRUCTURES SHALL BE BORNE BY THE CONTRACTOR. ADDITIONALLY, THE CONTRACTOR(S) SHALL NOTIFY THE OWNER AND ENGINEER IF ANY ERRORS OR DISCREPANCIES ARE FOUND ON THE CONSTRUCTION DOCUMENTS (PS&E), WHICH NEGATIVELY IMPACT THE PROJECT. THE ENGINEER AND OWNER SHALL BE INDEMNIFIED OF PROBLEMS AND/OR COST WHICH MAY RESULT FROM CONTRACTOR'S FAILURE TO NOTIFY ENGINEER AND OWNER.

NOTE

AREAS TO BE PERMANENTLY STABILIZED WITH VEGETATION AND SEEDING SPECIFICATIONS ARE SHOWN ON LANDSCAPE PLAN.

SITE DATA

TOTAL LAND AREA: 27.68 AC
DISTURBED AREA: 2.87AC
IMPERVIOUS: 5.35 AC
PERVIOUS: 22.33 AC
RUNOFF COEFF. PRE-DEV: 0.20
RUNOFF COEFF. POST-DEV: 0.90

811 Know what's below. Call before you dig.

!!!CAUTION!!!

EXISTING OVERHEAD & UNDERGROUND UTILITIES IN THE VICINITY. VERIFY LOCATION OF EXISTING UNDERGROUND UTILITIES BY VACUUM EXCAVATION OR OTHER POTHOLING TECHNIQUES.

*** CAUTION: NOTICE TO CONTRACTOR ***

THE CONTRACTOR SHALL NOTE ON SITE PLAN THE LOCATION OF ALL MATERIAL STORAGE AREAS, EQUIPMENT STORAGE AREAS, PETROLEUM TANKS, SOLID WASTE RECEPTACLES, SANITARY FACILITIES, ANY ON-SITE OR OFF-SITE BORROW OR STOCKPILE AREA, ANY ON-SITE OR OFF-SITE SUPPORT ACTIVITIES (SUCH AS ASPHALT OR CONCRETE PLANTS). CONTRACTOR SHALL ALSO PREPARE, KEEP ON SITE, AND MAINTAIN CURRENT A LIST OF MATERIALS WITH APPROXIMATE QUANTITIES, WHICH ARE STORED ON SITE.

PROJECT NARRATIVE

MATER DEI ADDITION - THIS PROJECT CONSISTS OF THE ADDITION OF 7,550 SF NEW MEETING SPACE FOR YOUTH RELIGIOUS EDUCATION WHERE THE SAND VOLLEYBALL COURT EXISTS TODAY. CURRENTLY THE YOUTH MEET IN THE EVENING INSIDE THE MAIN CHURCH BUILDING AND THE TEACHING MATERIALS ARE PULLED IN & OUT OF STORAGE AND THE CHAIRS ARE REARRANGED AS NEEDED MULTIPLE TIMES A WEEK. IT IS PREFERRED THAT THE YOUTH HAVE THEIR OWN MEETING SPACE AND STORAGE AREA DEDICATED FOR THEIR USE/ACTIVITIES. IT IS ALSO PLANNED TO HAVE A SEPARATE 581 SF BOOK STORE IN THE VICINITY OF THE EDUCATION ROOMS TO SUPPORT THE RELIGIOUS EDUCATION CURRICULUM IF FUNDS ALLOW FOR IT AT THIS TIME.

EROSION CONTROL SEQUENCE

1. INSTALL SILT FENCES & TRIANGULAR SEDIMENT FILTER DIKES AROUND PERIMETER OF PROPERTY AND DISTURBED AREAS AS SHOWN.
2. INSTALL INLET PROTECTION FOR ALL EXISTING GRATE INLETS, CURB INLETS AND AT THE ENDS OF ALL EXPOSED STORM SEWER PIPES, IF PRESENT.
3. CONSTRUCT TEMPORARY CONSTRUCTION EXIT.
4. COMMENCE GRUBBING AND REMOVAL OF VEGETATION IN AREA TO RECEIVE CUT OR FILL.
5. COMMENCE GRADING OPERATION FOR BUILDING PAD PREPARATION.
6. INSTALL ALL UNDERGROUND UTILITIES.
7. FINALIZE PAVEMENT SUBGRADE PREPARATION.
8. INSTALL ALL PROPOSED STORM SEWER PIPES AND INSTALL INLET PROTECTION SILT FENCES AT ENDS OF EXPOSED PIPES.
9. CONSTRUCT ALL GRATE INLETS AND DRAINAGE STRUCTURES. INLET PROTECTION SILT FENCES MAY BE REMOVED TEMPORARILY FOR THIS CONSTRUCTION.
10. REMOVE SILT FENCES AROUND INLETS AND MANHOLES NO MORE THAN 48 HOURS PRIOR TO PLACING STABILIZED BASE COURSE.
11. INSTALL BASE MATERIAL AS REQUIRED FOR PAVEMENT, CURB & GUTTER.
12. INSTALL ALL PAVING, CURB & GUTTER.
14. COMPLETE PLANTING AND/OR SEEDING OF VEGETATED AREAS TO ACCOMPLISH STABILIZATION.

GRAPHIC SCALE
0 50 100 FEET
1"=50'

THESE PLANS ARE SUBJECT TO REVIEW & APPROVAL BY JURISDICTIONAL ENTITIES.

LEGEND

PROPOSED SEDIMENT FENCE (SHOWN SCHEMATICALLY ON PLANS) — SF —
LIMITS OF DISTURBANCE
PROPOSED CONSTRUCTION ENTRANCE VEHICLE TRACKING CONTROL
INLET PROTECTION - GRATE FABRIC COVER (IP)

REF. : SHEET C2.1 EROSION CONTROL DETAILS

REVISIONS	DATE	BY

The drawings and specifications, Adams Consulting Engineers, Inc. instruments of service, are and shall remain the property of Adams Consulting Engineers, Inc. The information herein is to be used only for the purpose of building the project for which it was prepared, and is not to be used for any other purpose or project, or extensions to this project, or for any other use, including, without limitation, as a basis for creating derivative or similar architectural or engineering works, or otherwise expanding the scope of the project, without the express written consent of Adams Consulting Engineers, Inc. Any such use or reuse, or any alteration, or safety precautions, without such express written consent and indemnity Adams from all claims, damages, losses and expenses shall be borne by the party making such use or reuse, or such alteration, or taking such safety precautions.
© Copyright 2016, Adams Engineering

Adams
27524 Cashford Cr. Suite 101 ■ Wesley Chapel, Florida 33544 ■ (813) 929-7499

OUR LADY OF THE ROSARY MATER DEI ADDITION

EROSION CONTROL

TIM D. HODES LICENSED No 67017 STATE OF FLORIDA PROFESSIONAL ENGINEER
9-1-16

Certificate Of Authorization: #27614

PROJECT MGR.	-
PROJECT TECH.	RRP
CHECKED BY	TDH
JOB NO.	2009.053
SHEET NO.	C2.0

© Copyright 2016, Adams Engineering

FULL PATH: _Projects\2009\2009.053 OLOR Catholic Church\Drawings\Mater Dei Addition\3-Production_Projects\2009\2009.053 OLOR Catholic Church\Drawings\Mater Dei Addition\3-Production\C2.0 EROSION CONTROL
PLOTTER: Adobe PDF
PLOT TIME: 5:48:09 PM
PLOT DATE: Wednesday, August 31, 2016
PLOTTED BY: Ricardo Ramos
FILENAME: C2.0 EROSION CONTROL.dwg

FULL PATH: I:_Projects\2009\2009.053 OLOR Catholic Church\Drawings\Mater Dei Addition\03-Production\C2.1 EROSION CONTROL DETAILS

PLOTTER: Adobe PDF

PLOT TIME: 3:37:42 PM

PLOT DATE: Wednesday, August 31, 2016

PLOTTED BY: Ricardo Ramos

FILENAME: C2.1 EROSION CONTROL DETAILS.dwg

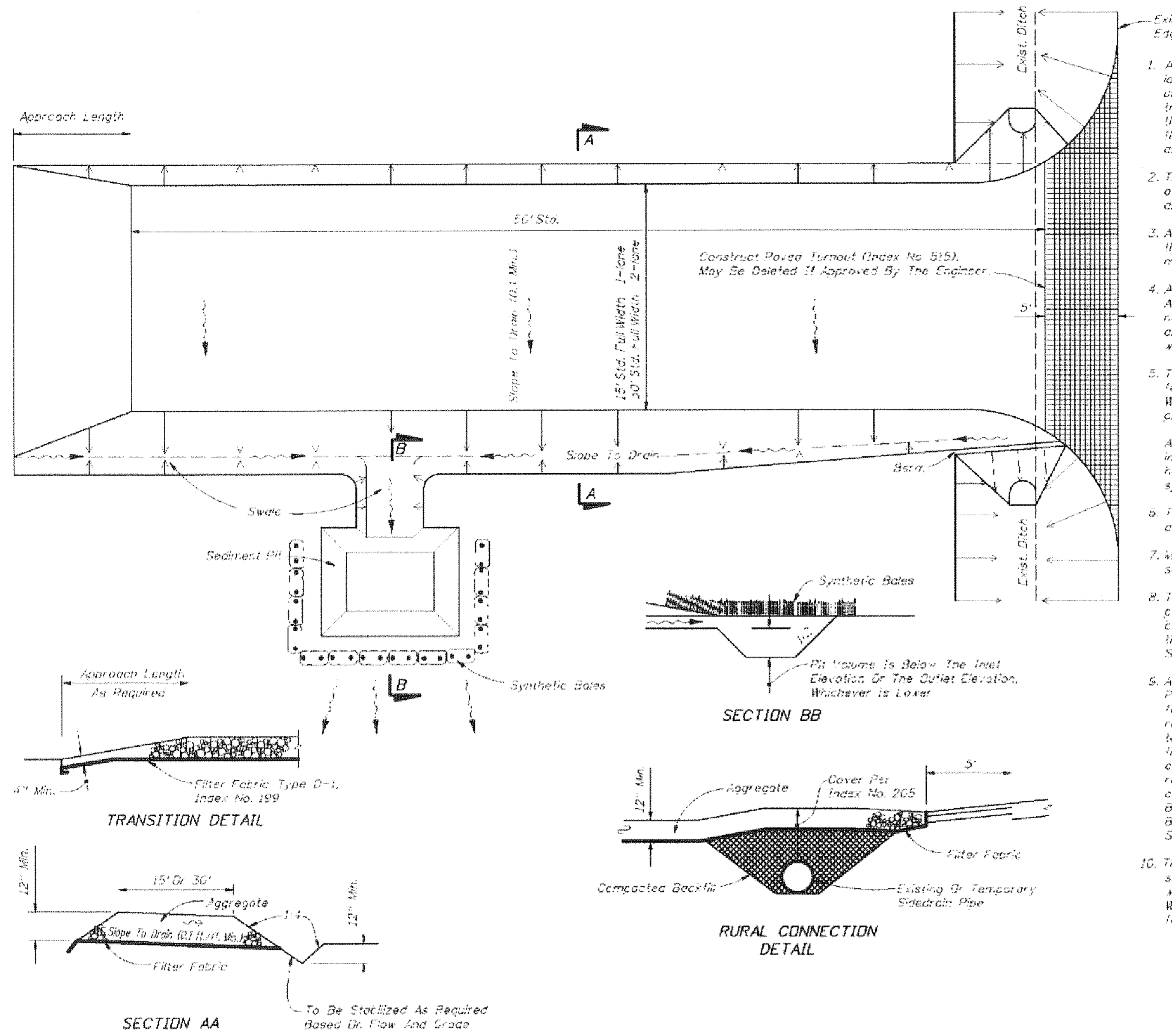

GENERAL NOTES

1. A Soil Tracking Prevention Device (STPD) shall be constructed at locations designated by the engineer for points of egress from unstabilized areas of the project to public roads where off-site tracking of mud could occur. Traffic from unstabilized areas of the construction project shall be directed thru a STPD. Barriers, flagging, or other positive means shall be used as required to limit and direct vehicular egress across the STPD.
2. The Contractor may propose an alternative technique to minimize off-site tracking of sediment. The alternative must be reviewed and approved by the Engineer prior to its use.
3. All materials spilled, dropped, or tracked onto public roads (including the STPD aggregate and construction mud) shall be removed daily, or more frequently if so directed by the Engineer.
4. Aggregates shall be as described in Section 901 excluding 901-2.3. Aggregates shall be FDOT size #1. If this size is not available, the next available smaller size aggregate may be substituted with the approval of the Engineer. Sizes containing excessive small aggregate will track off the project and are unsuitable.
5. The sediment pit should provide a retention volume of 3600 cubic feet/acre of surface area draining to the pit. When the STPD is isolated from other drainage areas, the following pit volumes will satisfy this requirement: 15' x 50'=100 ft.³ 30' x 50'=200 ft.³ As an option to the sediment pit, the width of the swale bottom can be increased to obtain the volume. When the sediment pit or swale volume has been reduced to one half, it shall be cleaned. When a swale is used, synthetic bales or silt fence shall be placed along the entire length.
6. The swale ditch draining the STPD shall have a 0.02% minimum and a 1.0% maximum grade along the STPD and to the sediment pit.
7. Mitered end sections are not required when the sidedrain pipe satisfies the clear zone requirements.
8. The STPD shall be maintained in a condition that will allow it to perform its function. To prevent off-site tracking, the STPD shall be rinsed (daily when in use) to move accumulated mud downward thru the stone. Additional stabilization of the vehicular route leading to the STPD may be required to limit the mud tracked.
9. A STPD shall be paid for under the contract unit price for Soil Tracking Prevention Device, EA. The unit price shall constitute full compensation for construction, maintenance, replacement of materials, removal, and restoration of the area utilized for the STPD, including but not limited to excavation, grading, temporary pipe (including MES when required), filter fabric, aggregate, paved turnout (including asphalt and base construction), ditch stabilization, approach route stabilization, sediment removal and disposal, water, rinsing and cleaning of the STPD and cleaning of public roads, grassing and sod. Synthetic Bale or Bale Type Barrier shall be paid for under the contract unit price for Synthetic Bales, LF. Silt fence shall be paid for under the contract unit price for Staked Silt Fence, LF.
10. The nominal size of a standard STPD is 15' x 50' unless otherwise shown in the plans. If the volume of entering and existing vehicles warrant, a 30' width STPD may be used if approved by the Engineer. When a double width (30') STPD is used, the pay quantity shall be 2 for each location.

1 VEHICLE TRACKING CONTROL - CONSTRUCTION ENTRANCE/EXIT

NTS

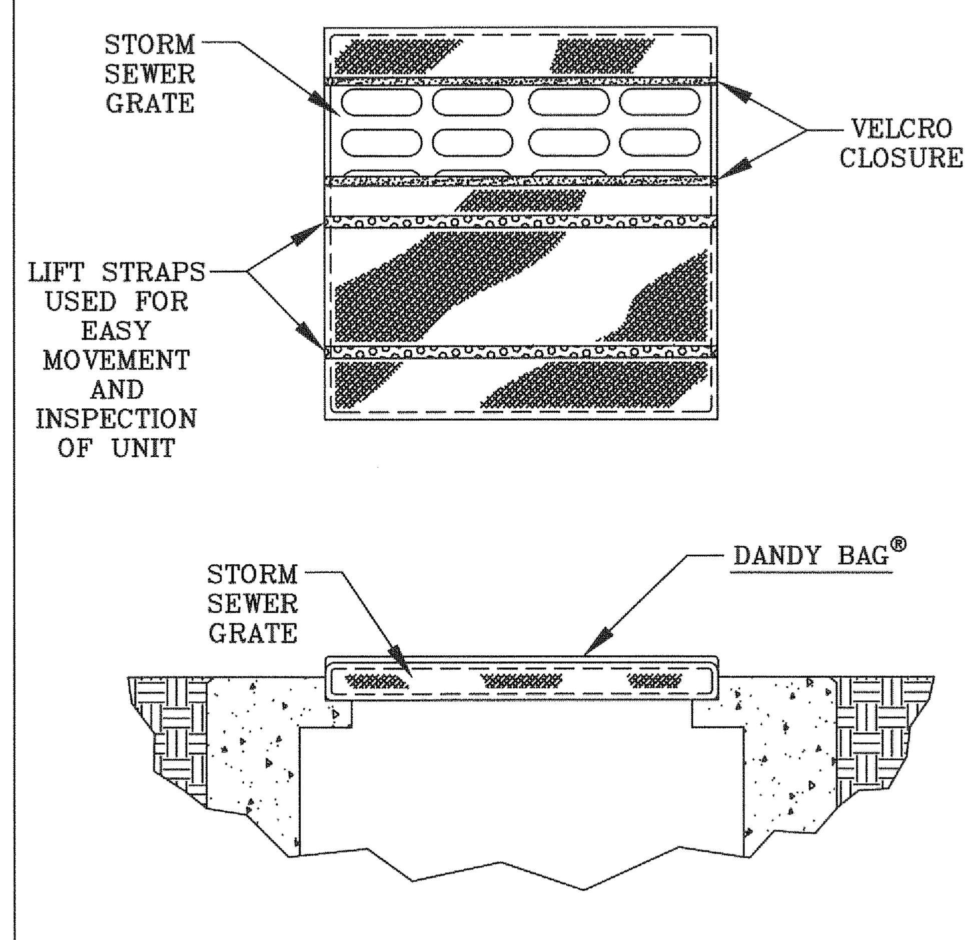

IP

2 DANDY BAG™ FOR CATCH BASINS

NTS

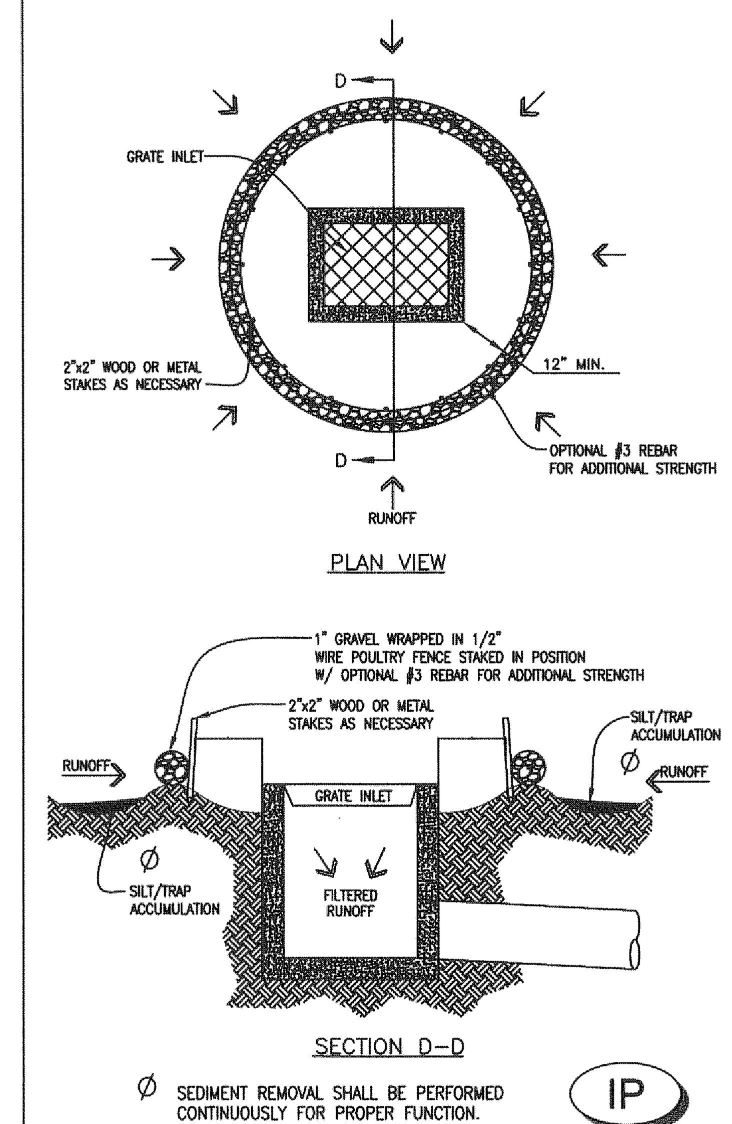

Ø SEDIMENT REMOVAL SHALL BE PERFORMED CONTINUOUSLY FOR PROPER FUNCTION.

IP

3 ROCK FILLED SOCK INLET PROTECTION

NTS

DANDY PRODUCTS

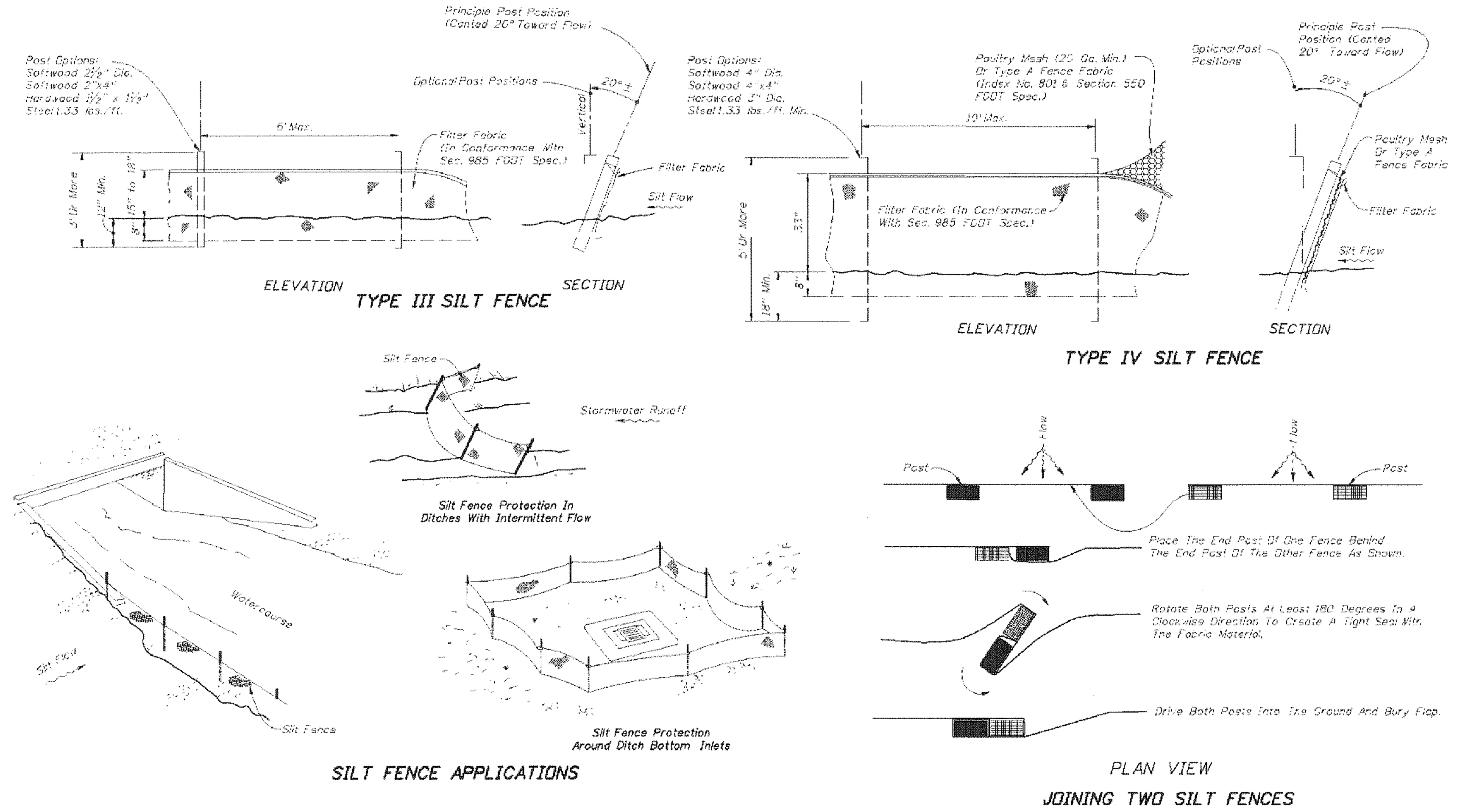

NOTES FOR SILT FENCES

1. Type III Silt Fence to be used at most locations. Where used in ditches, the spacing for Type III Silt fence shall be in accordance with Chart I, Sheet 1.
2. Type IV Silt Fence to be used where large sediment loads are anticipated. Suggested use is where fill slope is 1:2 or steeper and length of slope exceeds 25 feet. Avoid use where the detained water may back into travel lanes or off the right of way.
3. Do not construct silt fences across permanent flowing watercourses. Silt fences are to be at upland locations and turbidity barriers used at permanent bodies of water.
4. Where used as slope protection, Silt Fence is to be constructed on 5% longitudinal grade to avoid channelizing runoff along the length of the fence.
5. Silt Fence to be paid for under the contract unit price for Staked Silt Fence, (LF).

4 FDOT TYPE III SILT FENCE DETAIL

NTS

SF

EROSION CONTROL NOTES

1. CONTRACTOR MUST REQUEST COVERAGE UNDER THE FLORIDA GENERIC PERMIT FOR CONSTRUCTION ACTIVITIES. IN ORDER TO USE THE GENERIC PERMIT, FOR SITE WHICH DISTURB 1 OR MORE ACRES, A NOTICE OF INTENT (NOI) FORM MUST BE COMPLETED AND MAILED TO THE FLORIDA DEPARTMENT OF ENVIRONMENTAL PROTECTION (AT LEAST 48 HOURS PRIOR TO ANY EARTH DISTRUBING ACTIVITIES). THE GENERAL CONTRACTOR, (AND ALL SUBCONTRACTORS INVOLVED WITH ANY CONSTRUCTION ACTIVITY RELATED TO EARTHWORK, EROSION CONTROL., ETC., OR WHICH UTILIZE POSSIBLE POLLUTANTS AS DEFINED IN THE NPDES GENERIC PERMIT) MUST BE FAMILIAR WITH THE CONTENTS OF THE STORM WATER POLLUTION PREVENTION PLAN (SWPPP) AS WELL AS ALL THE REQUIREMENTS SET FORTH IN THE NPDES GENERIC PERMIT AND ANY APPLICABLE LOCAL PERMIT REQUIREMENTS. AND SHALL COMPLY WITH ALL SUCH REQUIREMENTS DURING ALL CONSTRUCTION ACTIVITIES.

2. THE CONTRACTOR SHALL ADHERE TO THE SEQUENCE OF OPERATIONS FOR EROSION CONTROL IMPLEMENTATION SHOWN HEREON. ANY DEVIATION FROM THIS SEQUENCE DEEMED NECESSARY BY THE CONTRACTOR MAY REQUIRE THAT THE STORMWATER POLLUTION PREVENTION PLAN BE MODIFIED IN ACCORDANCE WITH THE NPDES GENERIC PERMIT GUIDELINES AND THE STORM WATER POLLUTION PREVENTION PLAN.

3. THE CONTRACTOR SHALL MODIFY THIS PLAN TO SHOW LOCATIONS OF TEMPORARY WASHDOWN AREAS, PORTABLE TOILETS, EQUIPMENT MAINTENANCE/REPAIR AREAS, STOCKPILE AREAS, FUEL STORAGE AREAS, AND POLLUTANT CONTROLS FOR EACH, AS SOON AS POSSIBLE.

4. THE GENERAL CONTRACTOR SHALL PERFORM ALL REQUIRED INSPECTIONS OF STORMWATER CONTROLS AND PRACTICES AT FREQUENCIES GIVEN IN THE NPDES GENERIC PERMIT, AND SHALL COMPLETE AND SIGN APPROPRIATE INSPECTION FORMS (AS PROVIDED IN THE STORMWATER POLLUTION PREVENTION PLAN).

5. OIL AND GREASE ABSORBING MATERIALS SHALL BE READILY AVAILABLE ON-SITE AND SHALL BE PROMPTLY USED TO CONTAIN AND/OR CLEAN UP ALL FUEL OR CHEMICAL SPILLS OR LEAKS.

6. DUST CONTROL SHALL BE ACCOMPLISHED BY WATERING DRY, EXPOSED AREAS ON A REGULAR BASIS. SPRAYING OF PETROLEUM BASED OR TOXIC LIQUIDS FOR THIS PURPOSE IS PROHIBITED.

7. DISTURBED AREAS OF THE SITE WHERE CONSTRUCTION ACTIVITIES HAVE CEASED FOR AT LEAST FOURTEEN DAYS SHALL BE TEMPORARILY STABILIZED WITH VEGETATION AND MULCH.

8. DISTURBED AREAS OF THE SITE WHERE CONSTRUCTION ACTIVITIES HAVE PERMANENTLY CEASED SHALL BE PERMANENTLY SEEDED WITHIN FOURTEEN DAYS PER LANDSCAPING SPECIFICATIONS.

9. ALL VEHICLES SHALL BE CLEANED AT THE CONSTRUCTION EXIT POINTS ACCORDING TO NOTES SHOWN ON THE DETAIL THEREOF. IF THE MAJORITY OF MUD OR DIRT IS NOT REMOVED FROM EXITING TRAFFIC, HOSE BIBS SHALL BE PROVIDED AT CONSTRUCTION TRAFFIC EXIT POINTS, AND VEHICLE TIRES SHALL BE WASHED BEFORE EXITING ONTO PUBLIC ROADS. SILT FROM THIS WASHING OPERATION SHALL BE INTERCEPTED AND TRAPPED BEFORE WASHWATER IS ALLOWED TO BE DISCHARGED OFF-SITE.

10. ALL MATERIALS SPILLED, DROPPED, WASHED OR TRACKED ONTO ADJACENT ROADWAYS BY VEHICLES EXITING THE SITE SHALL BE CLEANED OR REMOVED IMMEDIATELY.

11. CONTRACTOR SHALL PREVENT ANY SILTATION FROM ENTERING THE STORM SEWER SYSTEM. ALL INLETS AND INLET OPENINGS SHALL BE FULLY ENCIRCLED WITH APPROPRIATE INLET PR0TECTION DEVICES.

12. THE CONTRACTOR SHALL REMOVE ALL ACCUMULATED SILT IN ANY TEMPORARY OR PERMANENT DETENTION PONDS, STORM SEWER INLETS AND PIPES, AND ALONG SILT FENCES, WITHIN 48 HOURS AFTER INSPECTION OF DEVICES REVEALS THE PRESENCE OF EXCESSIVE SILTATION (AS SPECIFIED IN THE STORM WATER POLLUTION PREVENTION PLAN).

13. SILT FENCES SHALL BE PLACED AROUND ANY STOCKPILES USED ON THIS SITE.

14. THE CONTRACTOR IS ADVISED TO CONSTRUCT TEMPORARY OR PERMANENT FENCING AROUND DETENTION PONDS AND SEDIMENT BASINS AT THE EARLIEST POSSIBLE TIME TO PREVENT ACCIDENTAL ACCESS BY PERSONS OR ANIMALS.

15. ANY ADDITIONAL EROSION CONTROL MEASURES REQUIRED TO ENSURE COMPLIANCE WITH THE NPDES GENERIC PERMIT OR LOCAL PERMIT REQUIREMENTS SHALL BE IMPLEMENTED BY THE CONTRACTOR, AT NO ADDITIONAL EXPENSE TO THE OWNER.

16. ALL TEMPORARY EROSION CONTROL MEASURES SHALL BE REMOVED AND PROPERLY DISPOSED OF OFF-SITE WITHIN THIRTY DAYS AFTER STABILIZATION OF ALL SURFACES.

17. THE CONTRACTOR SHALL ASSUME LIABILITY FOR DAMAGE TO ADJACENT PROPERTIES AND/OR PUBLIC RIGHT-OF-WAY RESULTING FROM FAILURE TO FULLY IMPLEMENT AND EXECUTE ALL EROSION CONTROL PROCEDURES SHOWN AND NOTED IN THESE PLANS.

18. WHENEVER DIRT, ROCK, OR OTHER MATERIALS ARE EXPORTED FOR USE OFF OF THE PRIMARY CONSTRUCTION SITE, CONTRACTOR SHALL ASSUME RESPONSIBILITY FOR COMPLIANCE WITH ALL FDEP STORMWATER REQUIREMENTS FOR THE REMOTE SITE. CONTRACTOR SHALL FURNISH THE ENGINEER AND THE OWNER'S CONSTRUCTION MANAGER WITH DOCUMENTATION OF COVERAGE FOR THE BORROW OR FILL SITE UNDER A NPDES PERMIT FOR STORMWATER DISCHARGES AND OF A WRITTEN AGREEMENT WITH THE LANDOWNER OF THE REMOTE SITE INDICATING EROSION CONTROL MEASURES HAVE BEEN IMPLEMENTED THEREON. AT A MINIMUM, EROSION CONTROL MEASURES MUST CONSIST OF PERIMETER CONTROLS (SILT FENCES) ON ALL DOWN SLOPES AND SIDE SLOPE BOUNDARIES OF ANY DISTURBED AREA, PLUS PROVISIONS FOR RE-VEGETATION AFTER THE FILL MATERIALS ARE IN PLACE.

19. ALL SLOPES ON SITE WHICH ARE 3:1 OR STEEPER SHALL BE STABILIZED BY TRACK WALKING (TRAVERSING UP AND DOWN THE SLOPE WITH A TRACKED VEHICLE) FOLLOWED BY INSTALLATION OF EROSION CONTROL BLANKET INSTALLED IN ACCORDANCE WITH MANUFACTURER'S INSTRUCTIONS. EROSION CONTROL BLANKET SHALL BE NORTH AMERICAN GREEN S150 OR APPROVED EQUAL.

20. THE CONTRACTOR SHALL NOTE ON SITE PLAN THE LOCATION OF ALL MATERIAL STORAGE AREAS, EQUIPMENT STORAGE AREAS, PETROLEUM TANKS, SOLID WASTE RECEPTACLES, SANITARY FACILITIES, CONCRETE WASHOUT AREAS, ANY ON-SITE OR OFF-SITE BORROW OR STOCKPILE AREA, ANY ON-SITE OR OFF-SITE SUPPORT ACTIVITIES (SUCH AS ASPHALT OR CONCRETE PLANTS). CONTRACTOR SHALL ALSO PREPARE, KEEP ON SITE, AND MAINTAIN CURRENT A LIST OF MATERIALS WITH APPROXIMATE QUANTITIES, WHICH ARE STORED ON SITE.

21. THE CONTRACTOR IS SPECIFICALLY CAUTIONED THAT THE LOCATION AND/OR ELEVATION OF EXISTING UTILITIES AS SHOWN ON THESE PLANS IS BASED UPON RECORD OF THE VARIOUS UTILITY COMPANIES AND, WHERE POSSIBLE, ACTUAL MEASUREMENTS TAKEN IN THE FIELD. THE INFORMATION PROVIDED HEREON IS NOT TO BE TAKEN AS EXACT OR FULLY COMPLETE. THE CONTRACTOR MUST CALL THE APPROPRIATE UTILITY COMPANY AT LEAST 48 HOURS BEFORE ANY EXCAVATION TO REQUEST EXACT FIELD LOCATION OF ALL EXISTING UTILITIES. IT SHALL BE THE RESPONSIBILITY OF THE CONTRACTOR TO RELOCATE ALL EXISTING UTILITIES WHICH CONFLICT WITH THE PROPOSED IMPROVEMENTS AS SHOWN.

EROSION CONTROL MAINTENANCE NOTES

1. ALL MEASURES STATED ON THIS EROSION AND SEDIMENT CONTROL PLAN, SHALL BE MAINTAINED IN FULLY FUNCTIONAL CONDITION UNTIL NO LONGER REQUIRED FOR A COMPLETED PHASE OF WORK OR FINAL STABILIZATION OF THE SITE. ALL EROSION AND SEDIMENTATION CONTROL MEASURES SHALL BE CHECKED BY A QUALIFIED PERSON ON A SCHEDULE WHICH COMPLIES WITH THE GENERAL PERMIT REQUIREMENTS AND CLEANED AND REPAIRED WITHIN 48 HOURS OF THE INSPECTION IN ACCORDANCE WITH THE FOLLOWING:
   - 1.A. INLET PROTECTION DEVICES AND BARRIERS SHALL BE REPAIRED OR REPLACED IF THEY SHOW SIGNS OF UNDERMINING, OR DETERIORATION.
   - 1.B. ALL SEEDED AREAS SHALL BE CHECKED REGULARLY TO SEE THAT A GOOD STAND IS MAINTAINED. AREAS SHOULD BE FERTILIZED, WATERED AND RE-SEEDED AS NEEDED.
   - 1.C. SILT FENCES SHALL BE REPAIRED TO THEIR ORIGINAL CONDITIONS IF DAMAGED. SEDIMENT SHALL BE REMOVED FROM THE SILT FENCES WHEN IT REACHES ONE-HALF THE HEIGHT OF THE SILT FENCE.
   - 1.D. THE TEMPORARY PARKING AND STORAGE AREA (IF PRESENT) SHALL BE KEPT IN GOOD CONDITION (SUITABLE FOR PARKING AND STORAGE). THIS MAY REQUIRE PERIODIC TOP DRESSING OF THE TEMPORARY PARKING AS CONDITIONS DEMAND.
   - 1.E. OUTLET STRUCTURES IN THE SEDIMENTATION BASINS OR SEDIMENT TRAPS (IF PRESENT) SHALL BE MAINTAINED IN OPERATIONAL CONDITION AT ALL TIMES. SEDIMENT SHALL BE REMOVED FROM SEDIMENT BASINS OR TRAPS WHEN THE DESIGN CAPACITY HAS BEEN REDUCED BY 50%.
   - 1.F. MAINTENANCE PROCEDURES FOR THE EROSION AND SEDIMENTATION CONTROL SYSTEMS SPECIFIED ARE GIVEN IN THE STORM WATER POLLUTION PREVENTION PLAN.

OWNER'S CERTIFICATION

PER SECTION 2.8.1.C OF THE BASIS OF REVIEW, THE OWNER/PERMITTEE SHALL ENSURE THAT THE SURFACE WATER AND STORMWATER MANAGEMENT MEASURES PROPOSED IN THE PLAN ARE EFFECTIVELY IMPLEMENTED UNTIL COMPLETION OF THE PROJECT OR UNTIL THE PERMANENT SURFACE WATER MANAGEMENT SYSTEM IS OPERATIONAL.

BY: ______________________

Rick Kolhoff, Owner's Representative

____

DATE

REVISIONS	DATE	BY

This drawing was prepared by Adams Consulting Engineers, Inc. (Adams) as an instrument of service, and shall remain the property of Adams. The information hereon shall be used only by the client to whom the services are rendered and only for the purpose of constructing or installing the work as shown at the designated location and site. Any other use, including (without limitation) any reproduction or alteration, is strictly prohibited, and the user shall hold harmless and indemnify Adams from all liabilities which may arise from such unauthorized use.

© Copyright 2016, Adams Engineering

Adams

27524 Cashford Cr. Suite 101 ■ Wesley Chapel, Florida 33544 ■ (813) 929-7499

OUR LADY OF THE ROSARY MATER DEI ADDITION

EROSION CONTROL DETAILS

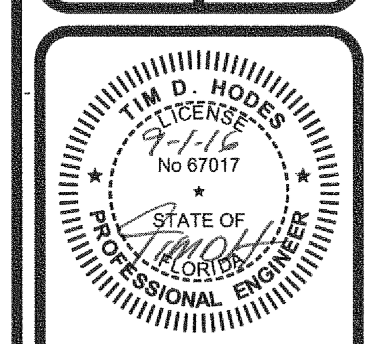

Certificate Of Authorization: #27614

PROJECT MGR.
-
PROJECT TECH.
RRP
CHECKED BY
TDH
JOB NO.
2009.053
SHEET NO.
C2.1

© Copyright 2016, Adams Engineering

O.L.O.R CATHOLIC CHURCH - MATER DEI ADDITION
STORMWATER POLLUTION PREVENTION PLAN NOTES

SITE EVALUATION, ASSESSMENT, & PLANNING:

PROJECT NAME: *O.L.O.R. CATHOLIC CHURCH - MATER DEI ADDITION*
PROJECT ADDRESS: *2348 COLLIER PKWY, LAND O' LAKES, FL 34639*
SECTION: 29 TOWNSHIP: *26 S* RANGE: *19 E*
LATITUDE: 28° 11' 30" N LONGITUDE: -82° 25' 58" W
DEVELOPER'S NAME: *CATHOLIC DIOCESE OF ST. PETERSBURG*
DEVELOPER'S ADDRESS: *6363 9TH AVENUE N.; ST. PETERSBURG, FL 33710*

Description of the Project and the types of Soil Disturbing Activities:

This project will consist of a complete building construction and its related site features.

Soil disturbing activities will include: demolition, striping and grubbing; installing a stabilized construction entrance, perimeter and other erosion and sediment controls throughout the site; grading; excavation, storm sewer, utilities and building foundations; and preparation for final planting and seeding.

Runoff Coefficient, Soils and Rainfall Information:

The initial coefficient of runoff for the pre-construction site is "c" = 0.20. The post-construction coefficient of runoff for the site will be "c" = 0.90. The site 27.68 acres and 2.87 acres will be disturbed by construction activities.

According to the USDA Soil Survey for Pasco County the soil is described as Adamsville fine sand.

The site is in Pasco County which receives an average of 54" of rainfall annually.

Site Area:

The site is approximately 27.68 acres and 2.23 acres will be disturbed by construction activities.

Sequence of Major Events:

1. Install silt fences around perimeter of property and disturbed areas as shown.
2. Install inlet protection for all existing grate inlets, curb inlets and at the ends of all exposed storm sewer pipes, if present.
3. Construct temporary construction exit.
4. Commence grubbing and removal of vegetation in area to receive cut or fill.
5. Commence grading operation for building pad preparation (see grading plan).
6. Install all underground utilities.
7. Finalize pavement subgrade preparation.
8. Install all proposed storm sewer pipes and install inlet protection silt fences at ends of exposed pipes.
9. Construct all grate inlets and drainage structures. Inlet protection silt fences may be removed temporarily for this construction.
10. Remove silt fences around inlets and manholes no more than 48 hours prior to placing stabilized base course.
11. Install base material as required for pavement, curb & gutter.
12. Install all paving, curb & gutter.
13. Remove temporary construction exit, silt fences, and inlet protection devices.
14. Complete planting and/or seeding of vegetated areas to accomplish stabilization, in accordance with the landscaping plan.

Name of Receiving Waters:

The site will drain through an on-site storm water management system and then into onsite retention ponds . It is the opinion of ADAMS that construction activities at this site with the practices contained in this SWPPP should not have an adverse impact on these water quality parameters.

EROSION AND SEDIMENT CONTROLS:

STABILIZATION PRACTICES

The contractor shall denude only areas where it is expected to be graded or altered within a two (2) week time frame. All pervious areas of the site included in grading that are disturbed during construction shall be graded and prepared with a combination of sod and/or seeding and mulched.

Temporary Stabilization - Top soil stock piles and disturbed portions of the site where construction activity temporarily ceases for at least 21 days shall be stabilized with temporary seed and mulch no later than 14 days from the last construction activity in that area. Grass seed shall be a mixture of 20 parts of Bermuda and 80 parts of Pensacola Bahia. The separate types of seed used shall be thoroughly dry mixed immediately before sowing. Seed which has become straw or hay consisting of oat, rye or wheat straw, or of Panola, peanut, coastal Bermuda or Bahia grass hay. Only un-deteriorated mulch which can be readily cut into the soil shall be used. Areas of the site which are to be paved will be temporarily stabilized by applying stabilization and base until bituminous pavement can be applied.

Permanent Stabilization - Disturbed portion of the site where construction activity permanently ceases shall be stabilized with sod no later than 14 days after the last construction activity.

Wind Erosion Stabilization -Areas within future units where earthwork is completed shall be completely seeded and mulched. Areas where construction operations will be continuous, fugitive dust shall be managed by applying a water spray to saturate the surface soils on a daily basis (or as needed) to maintain minimal dust transport. Fugitive dust shall be monitored continuously and additional measures may need to be taken to control off site transport of unacceptable levels of dust.

STRUCTURAL PRACTICES

Erosion Protection - During the construction phases, appropriate practices including, but not limited to: silt fence barriers, stabilized construction entrance, rock check dams, inlet protection with block and gravel and fabric material, and watering or other methods necessary will be implemented to control erosion.

Sediment Traps - Contractor shall excavate around all on-site drainage inlets and provide erosion control and overflow measures which shall serve as localized temporary sediment traps. At the contractor's discretion, the areas surrounding the on-site inlets can be excavated as much as two feet below the existing ground in order to allow any silt to be collected and removed prior to completion of the grading.

STORM WATER MANAGEMENT

Storm water drainage will be provided by an on-site storm drain and catch basin system. Any accumulated sediment shall be removed from the sediment basins. It is the responsibility of the contractor to construct and continually maintain all storm drains and retention/detention areas in accordance with the approved construction plans.

SPECIFIED OTHER CONTROLS:

WASTE DISPOSAL

Waste Materials - All waste materials shall be collected and contained in a controlled area pursuant to any state and/or local solid waste regulations. All trash and construction debris generated from construction is to be removed from the site and disposed of appropriately. No construction materials shall be buried on site. All personnel shall be instructed regarding the correct procedure for waste disposal. Notices stating these practices shall be posted in the construction office trailer. The job site superintendent (construction manager) responsible for the day-to-day site operations shall be responsible for seeing that these procedures are followed.

Hazardous Waste - If any, all hazardous waste materials shall be disposed of in the manner specified by state and/or local regulations. The contractor shall be responsible for seeing that these practices are followed.

Sanitary Waste - All sanitary waste shall be collected from the portable units by a license sanitary waste management contractor as required by state and/or local codes and regulations.

OFFSITE VEHICLE TRACKING

A stabilized construction entrance shall be provided to help reduce vehicle tracking of sediments. The paved streets adjacent to the site entrance will be swept daily to remove any excess mud, dirt or rock tracked from the site. Dump trucks hauling material from the site shall be covered with a tarpaulin.

TIMING OF CONTROL MEASURES:

As indicated in the Sequence of Major Events, staked silt fence and stabilized construction entrance shall be constructed prior to clearing or grading of any other portions of the site. Areas where construction activity temporarily ceases for more than 21 days shall be stabilized with a temporary seed and mulch within 14 days of the last disturbance. Once construction activities ceases permanently in an area, that area shall be stabilized with permanent seed and mulch. After the entire site is stabilized, the accumulated sediment will be removed from the silt fence and/or other controls shall be removed.

CERTIFICATION OF COMPLIANCE WITH FEDERAL, STATE AND LOCAL REGULATIONS:

The storm water pollution prevention plan reflects the jurisdictional and Water Management District requirements for storm water management and erosion & sediment control as established by the jurisdiction's storm water management technical manual, the Florida Administrative Code, Chapter 40D-4 and 40D-40, and the Water Management District.

MAINTENANCE/INSPECTION PRACTICES:

EROSION AND SEDIMENT CONTROL INSPECTION AND MAINTENANCE PRACTICES

These are the inspection and maintenance practices that shall be used to maintain erosion and sediment control:

1. Less than one half of the site shall be denuded at one time.
2. All control measures shall be inspected at least once each week and following any storm event of 0.5-inches or greater by a contractor's representative.
3. All measures shall be maintained in good working order; if a repair is necessary, it shall be initiated within 24 hours of report.
4. Built up sediment shall be removed from silt fence when it has reached one-third the height of the silt fence.
5. Silt fence shall be inspected regularly for depth of sediment, tears, to see if the fabric is securely attached to the fence posts, and to see that the fence posts are firmly in the ground.
6. The sediment basins, if present, shall be inspected for depth of sediment, and built up sediment shall be removed when it reaches 10% of the design capacity or at the end of the job.
7. Temporary and permanent grassing and mulching and sodding shall be inspected for bare spots, washouts, and healthy growth.
8. A maintenance inspection report shall be made after each inspection by the contractor and shall be kept in an active log readily available at the job site.
9. Either the site superintendent or his designees shall be responsible for inspections, maintenance, repair activities and completing the inspection and maintenance report.
10. Personnel selected for inspection and maintenance responsibilities shall receive training from the site superintendent. They shall be trained in all the inspection and maintenance practices necessary for keeping the erosion and sediment controls used on site in good working order.

NON-STORM WATER DISCHARGE

It is expected that the following non-storm water discharges which are allowed under the NPDES General Permit may occur from the site during the construction period. These types of discharges will be allowed under the conditions that no pollutants will be allowed to come in contact with the water prior to or after its discharge.

1. Discharges from firefighting activities
2. Fire hydrant flushings (See Note below)
3. Waters used to spray off loose solids from vehicles (waste waters from a more thorough cleaning, including the use of detergents or other cleaners is not authorized by this part) or control dust in accordance with Part V.D. 2.c. (2) of the Generic Permit
4. Potable water sources such as waterline flushings, routine external building washdown which does not use detergents, irrigation drainage (without detergents present) (See Note below)
5. Pavement washwaters where spills or leaks of toxic or hazardous materials have not occurred (unless all spill materials has been removed) and where detergents have not been used
6. Air conditioning condensate
7. Springs
8. Foundation or footing drains where flows where no contamination with process materials such as solvents is present

NOTE: Contractor shall neutralize any super-chlorinated water from water distribution pipes before releasing it into the environment. Neutralization techniques are available from the Engineer.

INVENTORY FOR POLLUTION PREVENTION PLAN:

The following materials or substances with known hazardous properties are expected to be present onsite during construction: Cleaning solvents, Detergents, Petroleum based products, Paints, Paint solvents, Acids, Fertilizers, Pesticides, Concrete, Concrete additives, Asphaltic Concrete, Tar and Soil stabilization additives.

SPILL PREVENTION:

MATERIAL MANAGEMENT PRACTICES

The following are the material management practices that shall be used to reduce the risk of spill or other accidental exposure of materials and substances to storm water runoff.

Good Housekeeping:
The following good housekeeping practices shall be followed onsite during the construction project.
1. An effort shall be made to store only enough products required to complete the project.
2. All materials stored on site shall be stored in a neat orderly manner in their appropriate containers and if possible, under a roof or other contained enclosure.
3. Products shall be kept in their original containers with the original manufacturer's label.
4. Substances shall not be mixed with one another unless recommended by the manufacturer.
5. Whenever possible, all of the product shall be used before disposing of the container.
6. Manufacturer's recommendations for proper use and disposal shall be followed.
7. The site superintendent shall inspect daily to ensure proper use and disposal of materials on site.

Hazardous Products:
These practices are used to reduce the risks associated with hazardous materials.
1. Products shall be kept in original containers unless the containers are not sealable.
2. Original labels and Material Safety Data Sheets (MSDS) shall be retained; they contain important product information.
3. If surplus product must be disposed of, manufacturer's and/or state and local recommended methods of proper disposal shall be followed.

PRODUCT SPECIFIC PRACTICES

Petroleum Products:
All on site vehicles shall be monitored for leaks and receive regular preventative maintenance to reduce the chance of leakage. Petroleum products shall be stored in tightly sealed containers which are clearly labeled. Any asphalt substances used onsite shall be applied accordingly to the manufacturer's recommendations.

Fertilizers:
Fertilizers shall be applied only in the minimum amount recommended by the manufacturer. Once applied, fertilizer shall be worked into the soil to limit exposure to storm water. Storage shall be in a covered shed. The contents of any partially used bags of fertilizer shall be transferred to a sealable plastic bin to avoid spills.

Paints:
All containers shall be tightly sealed and stored when not required for use. Excess paint shall not be discharged to the storm sewer system but shall be properly disposed of according to manufacturer's instructions and/or state and local regulations.

Concrete Trucks:
Contractor shall designate an area for discharge of surplus concrete or drum wash water and shall install a containment berm around this area to prevent runoff to the remainder of the site. Hard debris shall be disposed of by contractor upon completion of the project.

SPILL CONTROL PRACTICES:

In addition to the good housekeeping and materials practices discussed in the previous sections of this plan, the following practices shall be followed for spill prevention and cleanup:

1. Manufacturers recommended methods for spill clean up shall be clearly posted and site personnel shall be made aware of the procedures and the location of the information and clean up supplies. Material Safety Data Sheets (MSDS's) for each substance with hazardous properties that is used on the job site shall be obtained and used for the proper management of potential wastes that may result from these products. An MSDS will be posted in the immediate area where such product is stored and/or used and another copy of each MSDS will be maintained in the SWPPP file at the job site construction trailer office.
2. Materials and equipment necessary for spill clean up shall be kept in the material storage area onsite. Equipment and materials shall include, but not be limited to brooms, dust pans, mops, rags, gloves, goggles, kitty litter absorbent, sand, sawdust and plastic and metal trash containers specifically for this purpose.
3. All spills shall be cleaned up immediately after discovery.
4. The spill area shall be kept well ventilated and personnel shall wear appropriate protective clothing to prevent injury from contact with hazardous substance.
5. Spills of toxic or hazardous material shall be reported to the appropriate state or local government agency, regardless of the size.

The spill prevention plan shall be adjusted to include measures to prevent this type of spill from recurring and the clean up procedures for future use. A description of the spill, its cause and the clean up measures shall also be noted. Any owner or operator of a facility who has knowledge of any release of a hazardous substances from a facility in a quantity equal to or exceeding the reportable quantity in a 24 hour period shall notify the State Warning Point within one working day of the release. FDEP State Warning Point **1-850-413-9911** or **1-800-320-0519**.

NOTICE OF TERMINATION:

A notice of termination shall be submitted to the FDEP after the construction has been completed and the site has undergone final stabilization.

POLLUTION PREVENTION PLAN CERTIFICATION:

"I certify under penalty of law that this document and all attachments were prepared under my direction or supervision in accordance with a system designed to assure that qualified personnel properly gathered and evaluated the information submitted. Based on my inquiry of the person or persons who manage the system, or those persons directly responsible for gathering the information, the information submitted is, to the best of my knowledge and belief, true, accurate, and complete. I am aware that there are significant penalties for submitting false information, including the possibility of fine and imprisonment for knowing violations."

NAME: ____________ TITLE: ____________ COMPANY: ____________

SIGNATURE: ____________ DATE: ____________

CONTRACTOR'S CERTIFICATION:

"I certify under penalty of law that I understand, and shall comply with, the terms and conditions of the State of Florida Generic Permit for Stormwater Discharge from Large and Small Construction Activities and this Stormwater Pollution Prevention Plan prepared thereunder."

NAME	TITLE	COMPANY NAME, ADDRESS, AND PHONE #	DATE	SIGNATURE	RESPONSIBILITY

SWPPP NOTES

1. THE FLORIDA GENERIC PERMIT FOR CONSTRUCTION ACTIVITIES REQUIRES THAT THE PERMITTEE REVISE OR UPDATE THIS SWPPP WHENEVER THERE IS A CHANGE IN DESIGN, CONSTRUCTION, OPERATION, OR MAINTENANCE, OR WHENEVER THE RESULT OF AN INSPECTION INDICATES THAT THIS SWPPP IS INEFFECTIVE IN ELIMINATING OR SIGNIFICANTLY MINIMIZING POLLUTANTS IN STORM WATER DISCHARGES. HOWEVER, THE REGULATIONS OF THE FLORIDA BOARD OF PROFESSIONAL ENGINEERS REQUIRE THAT CHANGES MADE BY THE CONTRACTOR DURING CONSTRUCTION MUST BE AUTHORIZED BY A LICENSED FLORIDA ENGINEER. THESE CHANGES MAY BE AUTHORIZED BY THE ENGINEER OF RECORD THROUGH UPDATED DRAWINGS, WORK ORDER CHANGES, OR OTHER METHODS ACCEPTABLE TO THE ENGINEER; OR BY ANOTHER ENGINEER PROVIDED THAT THEY NOTIFY THE ENGINEER OF RECORD
2. ALL MEASURES STATED ON THIS EROSION AND SEDIMENT CONTROL PLAN, AND IN THE STORM WATER POLLUTION PREVENTION PLAN, SHALL BE MAINTAINED IN FULLY FUNCTIONAL CONDITION UNTIL NO LONGER REQUIRED FOR A COMPLETED PHASE OF WORK OR FINAL STABILIZATION OF THE SITE. ALL EROSION AND SEDIMENTATION CONTROL MEASURES SHALL BE CHECKED BY A QUALIFIED PERSON ON A SCHEDULE WHICH COMPLIES WITH THE GENERAL PERMIT REQUIREMENTS AND CLEANED AND REPAIRED WITHIN 48 HOURS OF THE INSPECTION IN ACCORDANCE WITH THE FOLLOWING:
   a. INLET PROTECTION DEVICES AND BARRIERS SHALL BE REPAIRED OR REPLACED IF THEY SHOW SIGNS OF UNDERMINING, OR DETERIORATION.
   b. ALL SEEDED AREAS SHALL BE CHECKED REGULARLY TO SEE THAT A GOOD STAND IS MAINTAINED. AREAS SHOULD BE FERTILIZED, WATERED AND RESEEDED AS NEEDED.
   c. SILT FENCES SHALL BE REPAIRED TO THEIR ORIGINAL CONDITIONS IF DAMAGED. SEDIMENT SHALL BE REMOVED FROM THE SILT FENCES WHEN IT REACHES ONE-THIRD THE HEIGHT OF THE SILT FENCE.
   d. THE TEMPORARY PARKING AND STORAGE AREA (IF PRESENT) SHALL BE KEPT IN GOOD CONDITION (SUITABLE FOR PARKING AND STORAGE). THIS MAY REQUIRE PERIODIC TOP DRESSING OF THE TEMPORARY PARKING AS CONDITIONS DEMAND.
   e. OUTLET STRUCTURES IN THE SEDIMENTATION BASINS OR SEDIMENT TRAPS (IF PRESENT) SHALL BE MAINTAINED IN OPERATIONAL CONDITION AT ALL TIMES. SEDIMENT SHALL BE REMOVED FROM SEDIMENT BASINS OR TRAPS WHEN THE DESIGN CAPACITY HAS BEEN REDUCED BY 10%.
   f. MAINTENANCE PROCEDURES FOR THE EROSION AND SEDIMENTATION CONTROL SYSTEMS SPECIFIED ARE PROVIDED ON THE STORM WATER POLLUTION PREVENTION PLAN.

OWNER'S CERTIFICATION

PER SECTION 2.8.1.C OF THE BASIS OF REVIEW, THE OWNER/PERMITTEE SHALL ENSURE THAT THE SURFACE WATER AND STORMWATER MANAGEMENT MEASURES PROPOSED IN THE PLAN ARE EFFECTIVELY IMPLEMENTED UNTIL COMPLETION OF THE PROJECT OR UNTIL THE PERMANENT SURFACE WATER MANAGEMENT SYSTEM IS OPERATIONAL.

BY: ____________
Rick Kolhoff - Owner's Representative

____
DATE

REVISIONS	DATE	BY

This drawing was prepared by Adams Consulting Engineers, Inc. (Adams) as an instrument of service, and shall remain the property of Adams. The information hereon shall be used only by the client to whom the services are rendered and only for the purpose of constructing or installing the work as shown at the designated location and site. Any other use, including (without limitation) any reproduction or alteration, is strictly prohibited, and the user shall hold harmless and indemnify Adams from all liabilities which may arise from such unauthorized use.
© Copyright 2016, Adams Engineering

Adams
27524 Cashford Cr. Suite 101 ■ Wesley Chapel, Florida 33544 ■ (813) 929-7499

OUR LADY OF THE ROSARY MATER DEI ADDITION

SWPP PLAN

TIM D. HODES LICENSE No 67017 STATE OF FLORIDA PROFESSIONAL ENGINEER 9-1-16

Certificate Of Authorization: #27614

PROJECT MGR. -
PROJECT TECH. RRP
CHECKED BY TDH
JOB NO. 2009.053
SHEET NO. **C2.2**

© Copyright 2016, Adams Engineering

FILENAME: C2.2 STORM WATER POLLUTION PREVENTION PLAN.dwg PLOTTED BY: Ricardo Ramos PLOT DATE: Wednesday, August 31, 2016 PLOT TIME: 3:39:13 PM PLOTTER: Adobe PDF

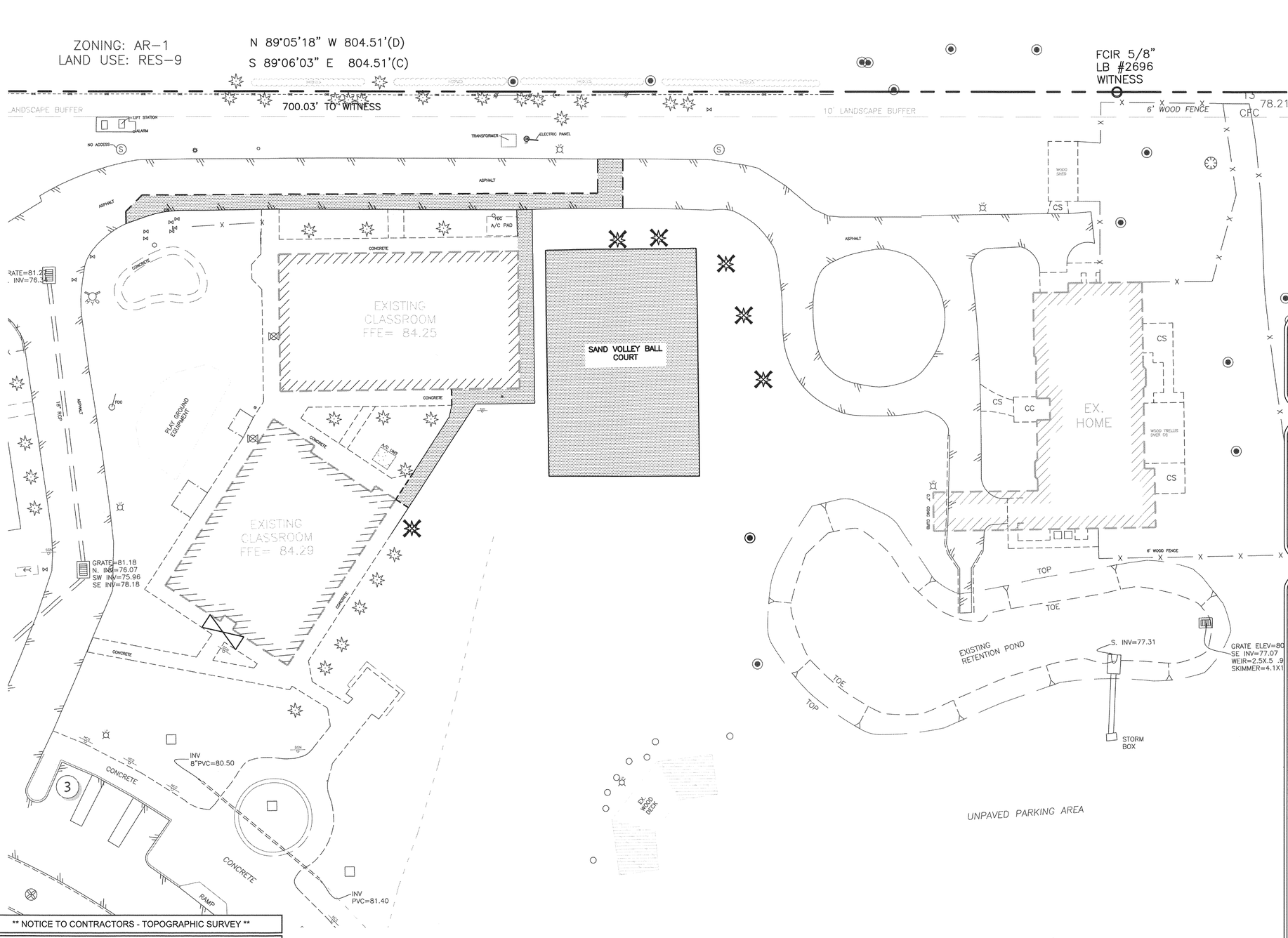

EXISTING TREE NOTE

ALL TREES REMOVED AS A RESULT OF THIS DEVELOPMENT ARE < 10" D.B.H.

LEGEND

- AREA OF REMOVAL(PAVEMENT, BUILDINGS, UNDERGROUND UTILITIES, CURBS, SIGNS, LIGHT POLES, LIGHT FIXTURES, ETC. UNLESS OTHERWISE NOTED.
- SAW-CUT LINE
- TREE/SHRUB TO BE REMOVED

DEMOLITION NOTES

1. A COPY OF THE APPROVED PERMIT AND PLANS SHALL BE AVAILABLE ON-SITE AT ALL TIMES WHEN ANY CONSTRUCTION ACTIVITIES IS OCCURRING ON THE SITE.
2. REFER TO SHEET C1.1 FOR ADDITIONAL NOTES.
3. CONTRACTOR IS RESPONSIBLE FOR PROTECTION OF ALL PROPERTY CORNERS AND PINS.
4. CONTRACTOR SHALL REMOVE PAVEMENT IN ACCORDANCE WITH SPECIFICATIONS.
5. CONTRACTOR IS RESPONSIBLE FOR THE REPAIR OF ANY DAMAGE TO EXISTING IMPROVEMENTS DURING CONSTRUCTION, SUCH AS, BUT NOT LIMITED TO: DRAINAGE, UTILITIES, PAVEMENT, STRIPING, CURB, LANDSCAPE, ETC. REPAIRS SHALL BE EQUAL TO OR BETTER THAN EXISTING CONDITIONS.
6. ALL WORK ON THIS PLAN SHALL BE DONE IN STRICT ACCORDANCE WITH SITE WORK SPECIFICATIONS.
7. CONTRACTOR SHALL COMPLY TO THE FULLEST EXTENT WITH THE LATEST STANDARDS OF OSHA DIRECTIVES OR ANY OTHER AGENCY HAVING JURISDICTION FOR EXCAVATION AND TRENCHING PROCEDURE. CONTRACTOR SHALL USE SUPPORT SYSTEMS, SLOPING, BENCHING, OR OTHER MEANS OF PROTECTION, INCLUDING BUT IS NOT LIMITED TO, ACCESS AND EGRESS FROM ALL EXCAVATION AND TRENCHING. CONTRACTOR IS RESPONSIBLE TO COMPLY WITH PERFORMANCE CRITERIA FOR OSHA.
8. CONTRACTOR SHALL BE RESPONSIBLE FOR PROTECTING THE PUBLIC DURING CONSTRUCTION, INCLUDING BUT NOT LIMITED TO: CONSTRUCTION FENCING, BARRICADES, SIGNAGE, ETC.
9. CONTRACTOR IS RESPONSIBLE FOR VERIFYING ALL UTILITIES AND NOTIFYING THE APPROPRIATE UTILITY COMPANY PRIOR TO BEGINNING CONSTRUCTION.
10. CONTRACTOR SHALL VERIFY HORIZONTAL AND VERTICAL LOCATION OF ALL EXISTING UTILITIES PRIOR TO CONSTRUCTION AND NOTIFY THE ENGINEER OF RECORD OF ANY UTILITY CONFLICTS.
11. CONTRACTOR SHALL SECURE DEMOLITION PERMIT FROM JURISDICTIONAL AGENCY PRIOR TO MOBILIZATION.
12. THE CONTRACTOR SHALL CREATE AMPLE STAGING AND STOCKPILING AREAS FOR TREE TRANSPLANTS, CRUSHED CONCRETE, TOPSOIL, ETC. IN ACCORDANCE WITH COUNTY SPECIFICATIONS.

**** NOTICE TO CONTRACTORS - TOPOGRAPHIC SURVEY ****

TOPOGRAPHIC INFORMATION TAKEN FROM A TOPOGRAPHIC SURVEY PERFORMED BY HAMILTON ENGINEERING AND SURVEYING. THE CONTRACTOR SHALL NOTIFY THE ENGINEER IMMEDIATELY, IN WRITING, OF ANY DISCREPANCIES OR OMISSIONS TO THE TOPOGRAPHIC INFORMATION. THE CONTRACTOR(S) SHALL BE RESPONSIBLE FOR CONFIRMING THE LOCATION (HORIZONTAL/VERTICAL) OF ANY BURIED CABLES, CONDUITS, PIPES, AND STRUCTURES (STORM SEWER, SANITARY SEWER, WATER, GAS, TELEVISION, TELEPHONE, ETC.) WHICH IMPACT THE CONSTRUCTION SITE. THE CONTRACTOR(S) SHALL NOTIFY THE OWNER AND ENGINEER IF ANY DISCREPANCIES ARE FOUND BETWEEN THE ACTUAL CONDITIONS VERSUS THE DATA CONTAINED IN THE CONSTRUCTION PLANS. ANY COSTS INCURRED AS THE RESULT OF NOT CONFIRMING THE ACTUAL LOCATION (HORIZONTAL/VERTICAL) OF SAID CABLES, CONDUITS, PIPES, AND STRUCTURES SHALL BE BORNE BY THE CONTRACTOR. ADDITIONALLY, THE CONTRACTOR(S) SHALL NOTIFY THE OWNER AND ENGINEER IF ANY ERRORS OR DISCREPANCIES ARE FOUND ON THE CONSTRUCTION DOCUMENTS (PS&E), WHICH NEGATIVELY IMPACT THE PROJECT. THE ENGINEER AND OWNER SHALL BE INDEMNIFIED OF PROBLEMS AND/OR COST WHICH MAY RESULT FROM CONTRACTOR'S FAILURE TO NOTIFY ENGINEER AND OWNER.

NOTICE TO CONTRACTORS - UTILITIES

THE CONTRACTOR IS SPECIFICALLY CAUTIONED THAT THE LOCATION AND/OR ELEVATION OF ANY EXISTING UTILITIES AS SHOWN ON THESE PLANS ARE BASED ON RECORDS OF THE VARIOUS UTILITY COMPANIES, THE GOVERNING MUNICIPALITY, AND WHERE POSSIBLE, MEASUREMENTS TAKEN IN THE FIELD. THE INFORMATION PROVIDED IS NOT TO BE RELIED ON AS BEING EXACT OR COMPLETE. THE CONTRACTOR MUST CALL THE APPROPRIATE UTILITY COMPANY AT LEAST 48 HOURS BEFORE ANY EXCAVATION TO REQUEST EXACT FIELD LOCATION OF UTILITIES. IT SHALL BE THE RESPONSIBILITY OF THE CONTRACTOR TO RELOCATE ALL EXISTING UTILITIES WHICH CONFLICT WITH THE PROPOSED IMPROVEMENTS SHOWN ON THESE PLANS.

!!!CAUTION!!!

EXISTING OVERHEAD & UNDERGROUND UTILITIES IN THE VICINITY. VERIFY LOCATION OF EXISTING UNDERGROUND UTILITIES BY VACUUM EXCAVATION OR OTHER POTHOLING TECHNIQUES.

811 Know what's **below.** Call before you dig.

THESE PLANS ARE SUBJECT TO REVIEW & APPROVAL BY JURISDICTIONAL ENTITIES.

REVISIONS	DATE	BY

This drawing was prepared by Adams Engineering, Inc. (Adams) as an instrument of service and shall remain the property of Adams. The information contained herein is for use only by the client to whom the contract is addressed and for the purposes of constructing or maintaining a building or facility at the designated location and site. Any other use, including but not limited to, reproduction or transfer to other parties, is prohibited and the user shall hold harmless Adams from any and all damages, losses, liabilities which may arise from such unauthorized use.

© Copyright 2016, Adams Engineering

Adams
27524 Cashford Cr. Suite 101 ■ Wesley Chapel, Florida 33544 ■ (813) 929-7409

OUR LADY OF THE ROSARY MATER DEI ADDITION

DEMOLITION PLAN

TIM D. HODGES
LICENSED
7-1-16
No 67017
STATE OF FLORIDA
PROFESSIONAL ENGINEER

Certificate Of Authorization: #27614

PROJECT MGR.	-
PROJECT TECH.	RRP
CHECKED BY	TDH
JOB NO.	2009.053
SHEET NO.	C3.0

© Copyright 2016, Adams Engineering

FULL PATH: I:_Projects\2009\2009.053 OLOR Catholic Church\Drawings\Mater Dei Addition\03-Production_Projects\2009\2009.053 OLOR Catholic Church\Drawings\Mater Dei Addition\03-Production\C3.0 DEMOLITION PLAN
PLOTTER: Adobe PDF
PLOT TIME: 4:04:16 PM
PLOT DATE: Wednesday, August 31, 2016
PLOTTED BY: Ricardo Ramos
FILENAME: C3.0 DEMOLITION PLAN.dwg

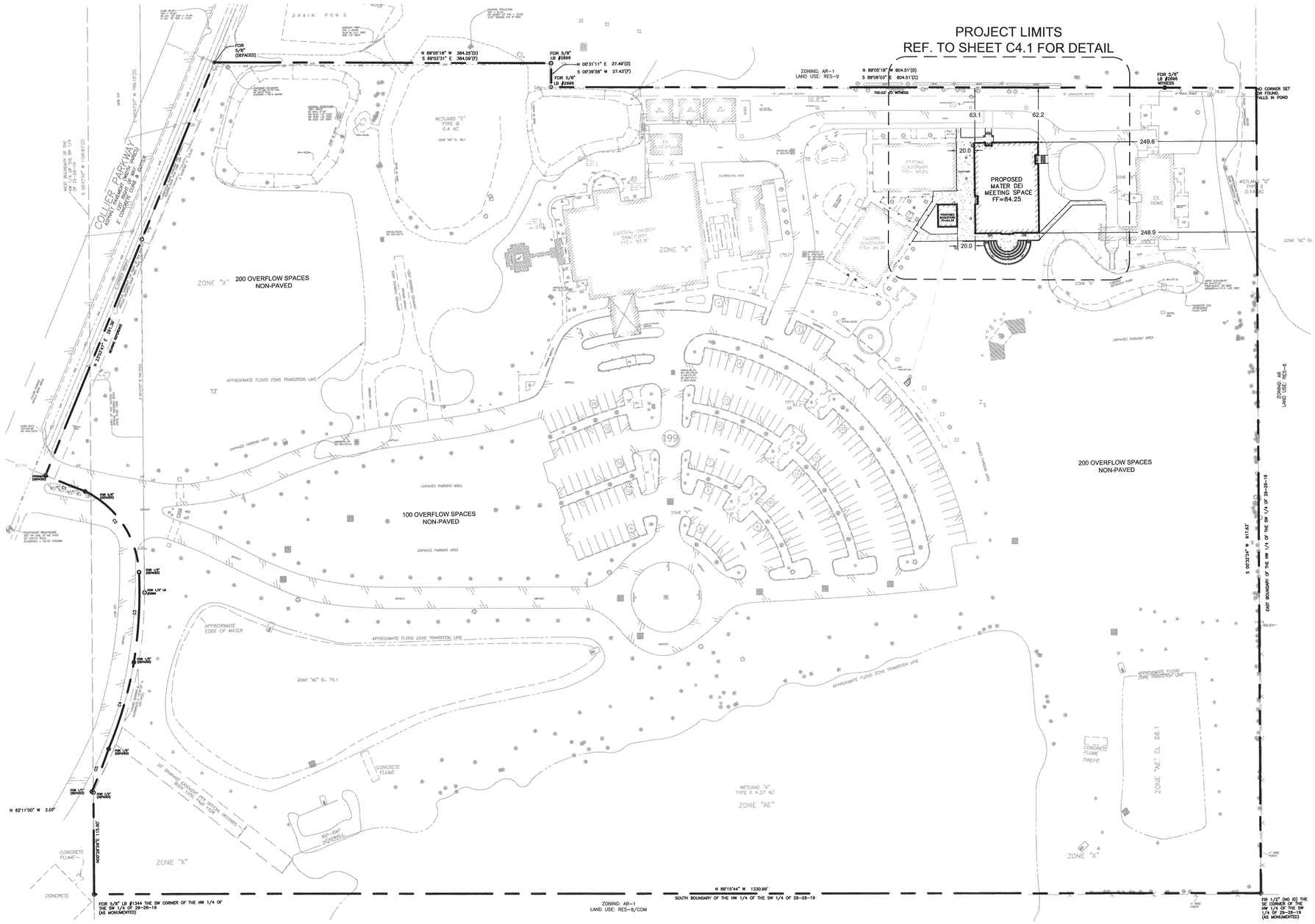

GRAPHIC SCALE

0 60 120 FEET

1"=60'

THESE PLANS ARE SUBJECT TO REVIEW & APPROVAL BY JURISDICTIONAL ENTITIES.

CONTACT INFORMATION

LAND OWNER/DEVELOPER:
CATHOLIC DIOCESE OF ST. PETERSBURG
6363 9TH AVENUE
ST. PETERSBURG, FLORIDA 33710
ATTN: RICK KOLHOFF
PHONE: (727) 341-6840

CIVIL ENGINEER:
ADAMS ENGINEERING
27524 CASHFORD CIRCLE, STE. 101
WESLEY CHAPEL, FLORIDA 33544
ATTN: TIM D. HODES, P.E.
PHONE: (813) 929-7499

PROJECT NARRATIVE

MATER DEI ADDITION - THIS PROJECT CONSISTS OF THE ADDITION OF 7,550 SF NEW MEETING SPACE FOR YOUTH RELIGIOUS EDUCATION WHERE THE SAND VOLLEYBALL COURT EXISTS TODAY. CURRENTLY THE YOUTH MEET IN THE EVENING INSIDE THE MAIN CHURCH BUILDING AND THE TEACHING MATERIALS ARE PULLED IN & OUT OF STORAGE AND THE CHAIRS ARE REARRANGED AS NEEDED MULTIPLE TIMES A WEEK. IT IS PREFERRED THAT THE YOUTH HAVE THEIR OWN MEETING SPACE AND STORAGE AREA DEDICATED FOR THEIR USE/ACTIVITIES. IT IS ALSO PLANNED TO HAVE A SEPARATE 581 SF BOOK STORE IN THE VICINITY OF THE EDUCATION ROOMS TO SUPPORT THE RELIGIOUS EDUCATION CURRICULUM IF FUNDS ALLOW FOR IT AT THIS TIME.

CURVE	RADIUS	ARC LENGTH	CHORD LENGTH	CHORD BEARING	DELTA ANGLE
C1	3359.03'	48.70'	48.70'	N 67°24'06" W	0°49'51"
C2	109.12'	118.24'	110.82'	N 32°54'30" W	61°01'55"
C3	504.60'	103.04'	102.86'	N 04°09'19" E	11°41'59"
C4	462.67'	103.51'	103.30'	N 17°06'27" E	12°49'07"
C5	614.00'	52.28'	52.27'	N 22°17'18" E	4°52'44"

SITE DATA TABLE

	EXISTING	PROPOSED	% CHANGE
Building Coverage	37,454 SF (0.86 Ac.)	45,585 SF (1.05 Ac.)	+21.71%
Paving & Walks	4.80 Ac.	4.92 Ac.	+2.50%
Pond Areas	2.30 Ac.	2.30 Ac.	0%
Wetland Areas	4.67 Ac.	4.67 Ac.	0%
Open Areas	14.14 Ac.	13.95 Ac.	-1.34%
Floor Area Ratio (FAR)	0.86 Ac. / 27.68 Ac.= 0.030	1.05 Ac. / 27.68 Ac.= 0.038	+26.67%
Impervious Surface Ratio	5.64 Ac. / 27.68 Ac.= 0.204	5.95 Ac. / 27.68 Ac.= 0.215	+5.39%

PARKING DATA TABLE

USE	REQUIRED PARKING RATE	# SPACES REQUIRED
CHURCH (1,200 SEATS - 17,698 SF)	1 SPACE / 3 SEATS	400
OFFICE & PORTABLES (5,833 SF)	1 SPACE / 300 SF	20
EX. MEETING SPACE /CLASSROOM (12 ROOMS-9,688 SF)	1 SPACE / STAFF MEMBER	24
NEW MATER DEI MEETING SPACE (7,550 SF)	1 SPACE / STAFF MEMBER	6
NEW BOOKSTORE (581 SF)	1 SPACE / 300 SF	2
TOTAL REQUIRED		**452**
TOTAL PARKING PROVIDED		
PAVED PARKING SPACES		**199**
OVERFLOW - NON PAVED SPACES		**500**

ZONING HISTORY

ZONING ACTION		DATE
RZ-3537	R-2 to R-4	03/10/1987
SE-4817	Church & Church School	12/07/1994

PASCO COUNTY SITE PLAN NOTES

1. ALL UTILITY CONSTRUCTION SHALL COMPLY WITH PASCO COUNTY STANDARDS FOR DESIGN AND CONSTRUCTION OF WATER AND WASTEWATER FACILITIES SPECIFICATIONS, LATEST EDITION.
2. ALL ON-SITE WATER AND SEWER FACILITIES SHALL BE OWNED AND MAINTAINED BY THE OWNER-DEVELOPER.
3. INSTALLATION OF FUEL STORAGE TANKS REQUIRES REVIEW AND APPROVAL BY THE FIRE MARSHAL AND THE ISSUANCE OF A SEPARATE BUILDING PERMIT. APPROVAL OF THE SITE PLAN DOES NOT CONSTITUTE APPROVAL OF THE LOCATION OF THE FUEL TANKS.
4. HANDICAP PARKING SPACES WILL BE PROPERLY SIGNED AND STRIPED IN ACCORDANCE WITH FLORIDA STATUE 316, THE MANUAL ON UNIFORM TRAFFIC CONTROL DEVICES, OR OTHER APPLICABLE STANDARDS.
5. THE ARCHITECT/ENGINEER CERTIFIES THAT THE SITE HAS BEEN DESIGNED IN ACCORDANCE WITH THE AMERICANS WITH DISABILITIES ACT.
6. ALL ON-SITE PARKING SPACES WILL BE STRIPED AND SIGNED IN ACCORDANCE WITH THE MANUAL ON UNIFORM TRAFFIC DEVICES, LATEST EDITION. PARKING SPACES, DIRECTIONAL ARROWS, AND STOP BARS SHALL BE STRIPED IN WHITE. IT SHALL BE THE OWNER/DEVELOPER'S RESPONSIBILITY TO PROPERLY SIGN AND STRIPE IN ACCORDANCE WITH APPLICABLE STANDARDS.
7. THE OWNER/DEVELOPER ACKNOWLEDGES THAT THIS APPROVAL DOES NOT INCLUDE ANY WORK IN THE COUNTY RIGHT-OF-WAY. ALL RIGHT-OF-WAY WORK SHALL BE A FUNCTION OF AN APPROVED PASCO RIGHT-OF-WAY USE PERMIT.
8. ALL CLEAR-SITE AREAS SHALL BE KEPT FREE OF ANY SIGNAGE PLANTINGS, TREES, ETC. IN EXCESS OF THREE-AND-A-HALF (3-1/2) FEET IN HEIGHT.
9. THE OWNER/DEVELOPER ACKNOWLEDGES THAT THE SITE AND ITS SUBSEQUENT BUILDING PERMITS SHALL COMPLY WITH ALL REZONING/MPUD/PUD CONDITIONS.

SITE INFORMATION

PROPERTY ADDRESS:	2348 COLLIER PARKWAY LAND O' LAKES, FLORIDA 34639
TOTAL LAND AREA:	27.68 Ac. ±
PARCEL I.D. #:	29-26-19-0000-01300-0000
S/T/R:	29 / 26 SOUTH / 19 EAST
CURRENT ZONING:	R-4 - HIGH DENSITY RESIDENTIAL DISTRICT
EXISTING LAND USE:	CHURCH (SPECIAL EXCEPTION USE)
PROPOSED LAND USE:	RES-9
PROPOSED ADDITION:	1-STORY MEETING SPACE BUILDING
BUILDING HEIGHT:	20'-10"
PROPOSED GROSS FLOOR AREA:	8,131 SF +/-

** FEMA NOTE **

Flood Statement: According to Community Panel No. 12101C0408F, Dated 09/26/2014, of the Federal Emergency Management Agency, National Flood Insurance Program Map, this property is within flood zone "X". If this site is not within an identified special flood hazard area, this flood statement does not imply that the property and/or the structures thereon will be free from flooding or flood damage. On rare occasions, greater floods can and will occur and flood heights may be increased by man-made or natural causes. This statement shall not create liability on the part of the Surveyor.

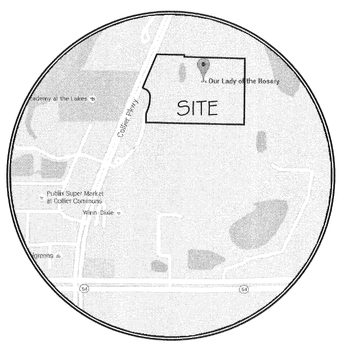

VICINITY MAP

N.T.S.

REVISIONS	DATE	BY

This drawing was prepared by Adams Consulting Engineers, Inc. and is the property of the licensee, and shall remain the property of the licensee. The information hereon shall be used only for the purpose for which the services are rendered and only for the project and location for which stipulating the work as shown in the drawing is intended. Reuse for any other use, including (without limitation) copying or transfer to another location, is strictly prohibited, except with the express written consent of and indemnity Adams from all claims arising from such reuse or such unauthorized use.

© Copyright 2016, Adams Engineering

Adams

27524 Cashford Cir. Suite 101 ■ Wesley Chapel, Florida 33544 ■ (813) 929-7499

OUR LADY OF THE ROSARY MATER DEI ADDITION

SITE PLAN

TIM D. HODES LICENSE No 67017 STATE OF FLORIDA PROFESSIONAL ENGINEER

Certificate Of Authorization: #27614

PROJECT MGR.	-
PROJECT TECH.	RRP
CHECKED BY	TDH
JOB NO.	2009.053
SHEET NO.	C4.0

© Copyright 2016, Adams Engineering

FILE PATH: H:_Projects\2009\2009.053 OLOR Catholic Church\Drawings\Mater Dei Addition\03-Production\C4.0 SITE PLAN
PLOTTER: Adobe PDF
PLOT TIME: 12:02:42 PM
PLOT DATE: Thursday, September 01, 2016
PLOTTED BY: Ricardo Ramos
FILENAME: C4.0 SITE PLAN.dwg

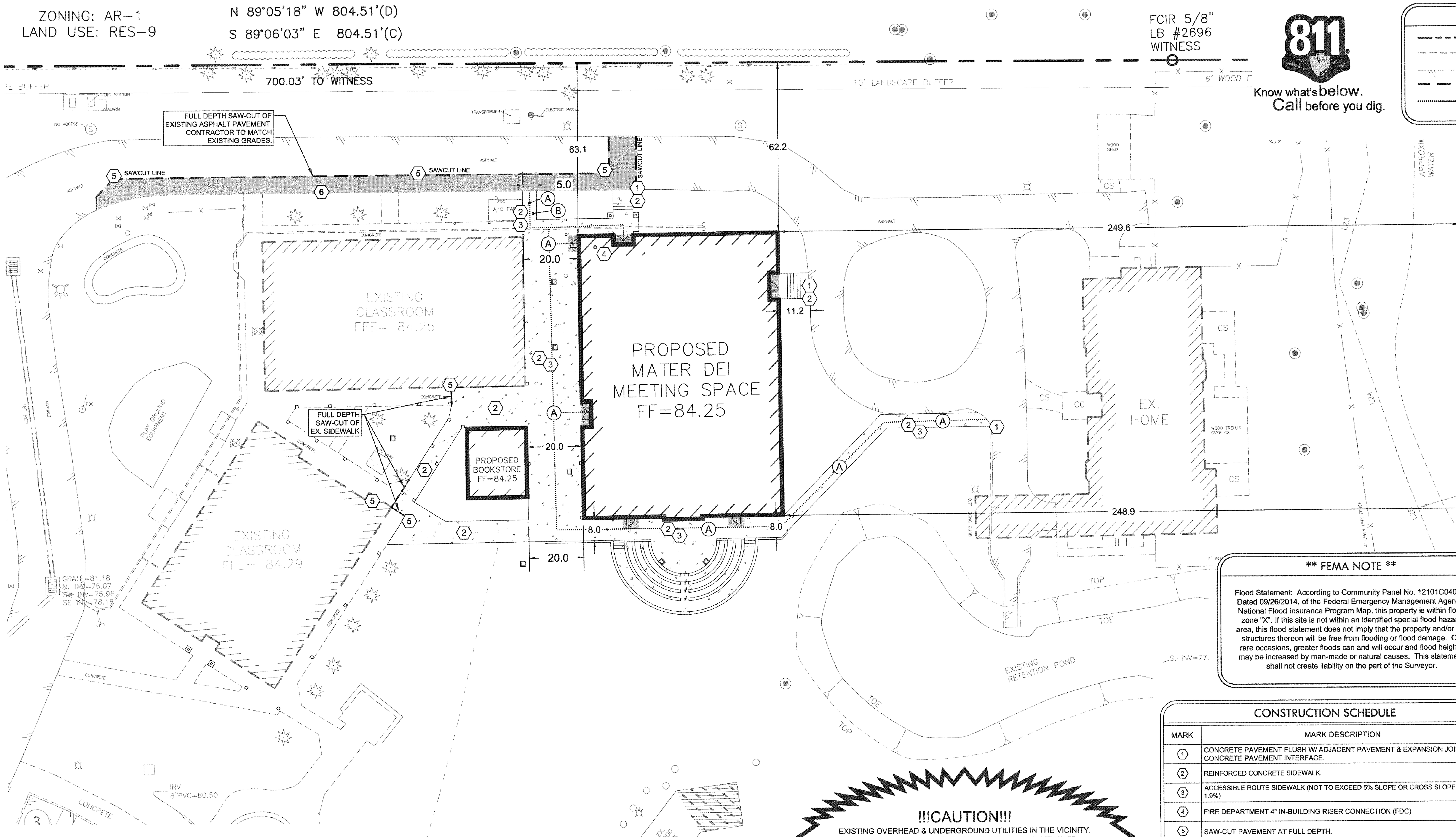

SITE LEGEND

BOUNDARY LINE	PROPOSED 6" HEAVY-DUTY ASPHALT PAVEMENT.
EXISTING CURBS	PROPOSED 4" THICK REINFORCED CONCRETE SIDEWALK
EXISTING PAVEMENT	
SAWCUT LINE	
ACCESSIBLE ROUTE	

GRAPHIC SCALE

0 20 40 FEET

1"=20'

THESE PLANS ARE SUBJECT TO REVIEW & APPROVAL BY JURISDICTIONAL ENTITIES.

CONTACT INFORMATION

LAND OWNER/DEVELOPER:
CATHOLIC DIOCESE OF ST. PETERSBURG
6363 9TH AVENUE N.
ST. PETERSBURG, FLORIDA 33710
ATTN: RICK KOLHOFF
PHONE: (727) 341-6840

CIVIL ENGINEER:
ADAMS ENGINEERING
27524 CASHFORD CIRCLE, STE. 101
WESLEY CHAPEL, FLORIDA 33544
ATTN: TIM D. HODES, P.E.
PHONE: (813) 929-7499

** FEMA NOTE **

Flood Statement: According to Community Panel No. 12101C0408F, Dated 09/26/2014, of the Federal Emergency Management Agency, National Flood Insurance Program Map, this property is within flood zone "X". If this site is not within an identified special flood hazard area, this flood statement does not imply that the property and/or the structures thereon will be free from flooding or flood damage. On rare occasions, greater floods can and will occur and flood heights may be increased by man-made or natural causes. This statement shall not create liability on the part of the Surveyor.

CONSTRUCTION SCHEDULE

MARK	MARK DESCRIPTION
1	CONCRETE PAVEMENT FLUSH W/ ADJACENT PAVEMENT & EXPANSION JOINTS AT CONCRETE PAVEMENT INTERFACE.
2	REINFORCED CONCRETE SIDEWALK.
3	ACCESSIBLE ROUTE SIDEWALK (NOT TO EXCEED 5% SLOPE OR CROSS SLOPE OF 1.9%)
4	FIRE DEPARTMENT 4" IN-BUILDING RISER CONNECTION (FDC)
5	SAW-CUT PAVEMENT AT FULL DEPTH.
6	HEAVY-DUTY ASPHALT PAVEMENT

!!!CAUTION!!!

EXISTING OVERHEAD & UNDERGROUND UTILITIES IN THE VICINITY. VERIFY LOCATION OF EXISTING UNDERGROUND UTILITIES BY VACUUM EXCAVATION OR OTHER POTHOLING TECHNIQUES.

** NOTICE TO CONTRACTORS - TOPOGRAPHIC SURVEY **

TOPOGRAPHIC INFORMATION TAKEN FROM A TOPOGRAPHIC SURVEY PERFORMED BY HAMILTON ENGINEERING AND SURVEYING. THE CONTRACTOR SHALL NOTIFY THE ENGINEER IMMEDIATELY, IN WRITING, OF ANY DISCREPANCIES OR OMISSIONS TO THE TOPOGRAPHIC INFORMATION. THE CONTRACTOR(S) SHALL BE RESPONSIBLE FOR CONFIRMING THE LOCATION (HORIZONTAL/VERTICAL) OF ANY BURIED CABLES, CONDUITS, PIPES, AND STRUCTURES (STORM SEWER, SANITARY SEWER, WATER, GAS, TELEVISION, TELEPHONE, ETC.) WHICH IMPACT THE CONSTRUCTION SITE. THE CONTRACTOR(S) SHALL NOTIFY THE OWNER AND ENGINEER IF ANY DISCREPANCIES ARE FOUND BETWEEN THE ACTUAL CONDITIONS VERSUS THE DATA CONTAINED IN THE CONSTRUCTION PLANS. ANY COSTS INCURRED AS THE RESULT OF NOT CONFIRMING THE ACTUAL LOCATION (HORIZONTAL/VERTICAL) OF SAID CABLES, CONDUITS, PIPES, AND STRUCTURES SHALL BE BORNE BY THE CONTRACTOR. ADDITIONALLY, THE CONTRACTOR(S) SHALL NOTIFY THE OWNER AND ENGINEER IF ANY ERRORS OR DISCREPANCIES ARE FOUND ON THE CONSTRUCTION DOCUMENTS (PS&E), WHICH NEGATIVELY IMPACT THE PROJECT. THE ENGINEER AND OWNER SHALL BE INDEMNIFIED OF PROBLEMS AND/OR COST WHICH MAY RESULT FROM CONTRACTOR'S FAILURE TO NOTIFY ENGINEER AND OWNER.

BENCHMARK INFORMATION

THE ELEVATIONS SHOWN HEREON ARE BASED ON THE NORTH AMERICAN VERTICAL DATUM OF 1988 (N.A.V.D. 1988) AS ESTABLISHED FROM N.G.S. MONUMENT "P-684", WITH AN ELEVATION OF 79.21 FEET N.A.V.D. 1988

NOTICE TO CONTRACTORS - UTILITIES

THE CONTRACTOR IS SPECIFICALLY CAUTIONED THAT THE LOCATION AND/OR ELEVATION OF ANY EXISTING UTILITIES AS SHOWN ON THESE PLANS ARE BASED ON RECORDS OF THE VARIOUS UTILITY COMPANIES, THE GOVERNING MUNICIPALITY, AND WHERE POSSIBLE, MEASUREMENTS TAKEN IN THE FIELD. THE INFORMATION PROVIDED IS NOT TO BE RELIED ON AS BEING EXACT OR COMPLETE. THE CONTRACTOR MUST CALL THE APPROPRIATE UTILITY COMPANY AT LEAST 48 HOURS BEFORE ANY EXCAVATION TO REQUEST EXACT FIELD LOCATION OF UTILITIES. IT SHALL BE THE RESPONSIBILITY OF THE CONTRACTOR TO RELOCATE ALL EXISTING UTILITIES WHICH CONFLICT WITH THE PROPOSED IMPROVEMENTS SHOWN ON THESE PLANS.

SITE DATA TABLE

	EXISTING	PROPOSED	% CHANGE
Building Coverage	37,454 SF (0.86 Ac.)	45,585 SF (1.05 Ac.)	+21.71%
Paving & Walks	4.80 Ac.	4.92 Ac.	+2.50%
Pond Areas	2.30 Ac.	2.30 Ac.	0%
Wetland Areas	4.67 Ac.	4.67 Ac.	0%
Open Areas	14.14 Ac.	13.95 Ac.	-1.34%
Floor Area Ratio (FAR)	0.86 Ac. / 27.68 Ac.= 0.030	1.05 Ac. / 27.68 Ac.= 0.038	+26.67%
Impervious Surface Ratio	5.64 Ac. / 27.68 Ac.= 0.204	5.95 Ac. / 27.68 Ac.= 0.215	+5.39%

PARKING DATA TABLE

USE	REQUIRED PARKING RATE	# SPACES REQUIRED
CHURCH (1,200 SEATS - 17,698 SF)	1 SPACE / 3 SEATS	400
OFFICE & PORTABLES (5,833 SF)	1 SPACE / 300 SF	20
EX. MEETING SPACE /CLASSROOM (12 ROOMS- 9,688 SF)	1 SPACE / STAFF MEMBER	24
NEW MATER DEI MEETING SPACE (7,550 SF)	1 SPACE / STAFF MEMBER	6
NEW BOOKSTORE (581 SF)	1 SPACE / 300 SF	2
TOTAL REQUIRED		452
TOTAL PARKING PROVIDED		
PAVED PARKING SPACES		199
OVERFLOW - NON PAVED SPACES		500

PASCO COUNTY SITE PLAN NOTES

1. ALL UTILITY CONSTRUCTION SHALL COMPLY WITH PASCO COUNTY STANDARDS FOR DESIGN AND CONSTRUCTION OF WATER AND WASTEWATER FACILITIES SPECIFICATIONS, LATEST EDITION.
2. ALL ON-SITE WATER AND SEWER FACILITIES SHALL BE OWNED AND MAINTAINED BY THE OWNER-DEVELOPER.
3. INSTALLATION OF FUEL STORAGE TANKS REQUIRES REVIEW AND APPROVAL BY THE FIRE MARSHAL AND THE ISSUANCE OF A SEPARATE BUILDING PERMIT. APPROVAL OF THE SITE PLAN DOES NOT CONSTITUTE APPROVAL OF THE LOCATION OF THE FUEL TANKS.
4. HANDICAP PARKING SPACES WILL BE PROPERLY SIGNED AND STRIPED IN ACCORDANCE WITH FLORIDA STATUE 316, THE MANUAL ON UNIFORM TRAFFIC CONTROL DEVICES, OR OTHER APPLICABLE STANDARDS.
5. THE ARCHITECT/ENGINEER CERTIFIES THAT THE SITE HAS BEEN DESIGNED IN ACCORDANCE WITH THE AMERICANS WITH DISABILITIES ACT.
6. ALL ON-SITE PARKING SPACES WILL BE STRIPED AND SIGNED IN ACCORDANCE WITH THE MANUAL ON UNIFORM TRAFFIC DEVICES, LATEST EDITION. PARKING SPACES, DIRECTIONAL ARROWS, AND STOP BARS SHALL BE STRIPED IN WHITE. IT SHALL BE THE OWNER/DEVELOPER'S RESPONSIBILITY TO PROPERLY SIGN AND STRIPE IN ACCORDANCE WITH APPLICABLE STANDARDS.
7. THE OWNER/DEVELOPER ACKNOWLEDGES THAT THIS APPROVAL DOES NOT INCLUDE ANY WORK IN THE COUNTY RIGHT-OF-WAY. ALL RIGHT-OF-WAY WORK SHALL BE A FUNCTION OF AN APPROVED PASCO RIGHT-OF-WAY USE PERMIT.
8. ALL CLEAR-SITE AREAS SHALL BE KEPT FREE OF ANY SIGNAGE PLANTINGS, TREES, ETC. IN EXCESS OF THREE-AND-A-HALF (3-1/2) FEET IN HEIGHT.
9. THE OWNER/DEVELOPER ACKNOWLEDGES THAT THE SITE AND ITS SUBSEQUENT BUILDING PERMITS SHALL COMPLY WITH ALL REZONING/MPUD/PUD CONDITIONS.

SITE INFORMATION

PROPERTY ADDRESS:	2348 COLLIER PARKWAY LAND O' LAKES, FLORIDA 34639
TOTAL LAND AREA:	27.68 Ac. ±
PARCEL I.D. #:	29-26-19-0000-01300-0000
S/T/R:	29 / 26 SOUTH / 19 EAST
CURRENT ZONING:	R-4 - HIGH DENSITY RESIDENTIAL DISTRICT
LAND USE:	CHURCH (SPECIAL EXCEPTION USE)
PROPOSED ADDITION:	MEETING SPACE BUILDING
PROPOSED GROSS FLOOR AREA:	8,131 SF +/-

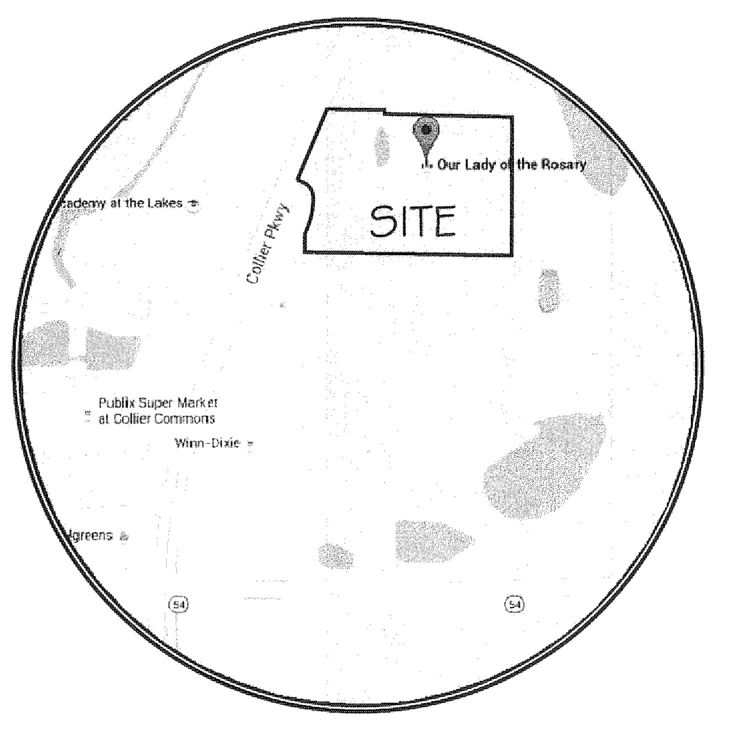

VICINITY MAP

N.T.S.

2012 FLORIDA ACCESSIBILITY CODE

(A) ACCESSIBLE ROUTES: (CHAPTER 4 - SECTION 403)

The running slope of walking surfaces shall not be steeper than 1:20. The cross slope of walking surfaces shall not be steeper than 1:48.

The clear width of walking surfaces shall be 36 inches minimum. The clear width shall be permitted to be reduced to 32 inches minimum for a legth of 24 inches maximum provided that reduced width segments are separated by segments that are 48 inches long minimum and 36 inches wide minimum. Where the accessible route makes a 180 degree turn around an element which is less than 48 inches wide, clear width shall be 42 inches minimum approaching the turn, 48 inches minimum at the turn and 42 inches minimum leaving the turn. An accessible route with a clear width less than 60 inches shall provide passing spaces at intervals of 200 feet maximum. Passing spaces shall be at least 60 inches by 60 inches minimum.

(B) RAMPS: (CHAPTER 4 - SECTION 405)

Ramp runs shall have a running slope not steeper than 1:12. The cross slope of ramp runs shall not be steeper than 1:48. Changes in level other than the running slope and cross slope are not permitted on ramp runs.

The clear width of a ramp run and, where handrails are provided, the clear width between handrails shall be 36 inches minimum.

The rise for any ramp run shall be 30 inches maximum. Ramps shall have landings at the top and the bottom of each ramp run. Landings slopes shall not be steeper than 1:48. The landing clear width shall be at least as wide as the widest ramp run leading to the landing. The landing clear length shall be 60 inches long minimum. Ramps that change directions between runs at landings shall have a clear landing 60 inches by 60 inches minimum.

Ramp runs with a rise greater than 6 inches shall have handrails complying with Section 505. Edge protection shall be provided on each side of ramp runs and at each side of ramp landing complying with Section 405.9. The floor or ground surface of the ramp run or landing shall extend 12 inches minimum beyond the inside face of a handrail.

(C) CURB RAMPS: (CHAPTER 4 - SECTION 406)

Curb ramp runs shall have a running slope not steeper than 1:12. The cross slope of ramp runs shall not be steeper than 1:48. Counter slopes of adjoining gutters and road surfaces immediately adjacent to the curb ramp shall not be steeper than 1:20. The adjacent surfaces at transitions at curb ramps to walk, gutters, and streets shall be at the same level.

Where provided, curb ramp flares shall not be steeper than 1:10.

Landings shall be provided at the tops of curb ramps. The landing clear length shall be 36 inches minimum. The landing clear width shall be at least as wide as the curb ramp, excluding flared sides, leading to the landing. In alterations, where there is no landing at the top of curb ramps, curb ramp flares shall be provided and shall not be steeper than 1:12.

Curb ramps and the flared sides of curb ramps shall be located so that they do not project into vertical traffic lanes, parking spaces, or parking access aisles.

Raised islands in crossings shall be cut through level with the street or have curb ramps at both sides. Each curb ramp shall have a level area 48 inches long minimum by 36 inches wide minimum at the top of the curb ramp in the part of the island intersected by the crossing.

Detectable warning shall extend the full width of the curb ramp and shall extend either the full depth of the curb ramp or 24 inches deep minimum measured from the back of the curb on the ramp surface.

(D) PARKING SPACES: (CHAPTER 5 - SECTION 502)

Each parking space must be at least 12 feet wide, shall be marked to define the width, and shall have an adjacent access aisle. Access aisles shall adjoin an accessible route that is at least 44 inches wide so that users are not compelled to walk or wheel behind parked vehicles. Access aisles serving car and van parking spaces shall be 60 inches wide minimum. Two parking spaces shall be permitted to share a common access aisle. Access aisles shall extend the full length of the parking spaces they serve. The access aisles must be striped diagonally to designate it as a no-parking zone

Access aisles shall be at the same level as the parking spaces they serve and slopes shall not be steeper than 1:48 in all directions.

Each accessible parking space must be prominently outlined with blue striping to be clearly distinguishable as a parking space designated for persons who have disabilities and must be posted with a permanent above-grade sign bearing the international symbol of accessibility, meeting the requirements of color and design approved by the Department of Transportation and the caption "parking by disabled permit only". Posted signage shall also indicate the penalty for illegal use of the space per jurisdictional entity.

(E) DETECTABLE WARNINGS: (CHAPTER 7 - SECTION 705)

Detectable warnings shall consist of a surface of truncated domes and shall comply with section 705. Detectable warning surfaces shall contrast visually with adjacent walking surfaces either light-on-dark, or dark-on-light. Detectable warning surfaces at platform boarding edges shall be 24 inches wide and shall extend the full length of the public use area of the platform.

REVISIONS	DATE	BY

This drawing was prepared by Adams Consulting Engineers, Inc. (Adams) as an instrument of service, and shall remain the property of Adams. The information hereon shall be used only by the client to whom the services are rendered and only for the purpose of constructing or installing the work as shown at the designated location and site. Any other use, including (without limitation) any reproduction or alteration, is strictly prohibited, and the user shall hold harmless and indemnify Adams from all liabilities which may arise from such unauthorized use.
© Copyright 2016, Adams Engineering

Adams

27524 Cashford Cr. Suite 101 ■ Wesley Chapel, Florida 33544 ■ (813) 929-7499

OUR LADY OF THE ROSARY MATER DEI ADDITION

ENLARGED SITE PLAN

TIM D. HODES LICENSE No 67017 STATE OF FLORIDA PROFESSIONAL ENGINEER 9-1-16

Certificate Of Authorization: #27614

PROJECT MGR.	-
PROJECT TECH.	RRP
CHECKED BY	TDH
JOB NO.	2009.053
SHEET NO.	C4.1

© Copyright 2016, Adams Engineering

FULL PATH: I:_Projects\2009\2009.053 OLOR Catholic Church\Drawings\Mater Dei Addition\03-Production\C4.1 ENLARGED SITE PLAN
PLOTTER: Adobe PDF
PLOT TIME: 6:05:32 PM
PLOT DATE: Wednesday, August 31, 2016
PLOTTED BY: Ricardo Ramos
FILENAME: C4.1 ENLARGED SITE PLAN.dwg

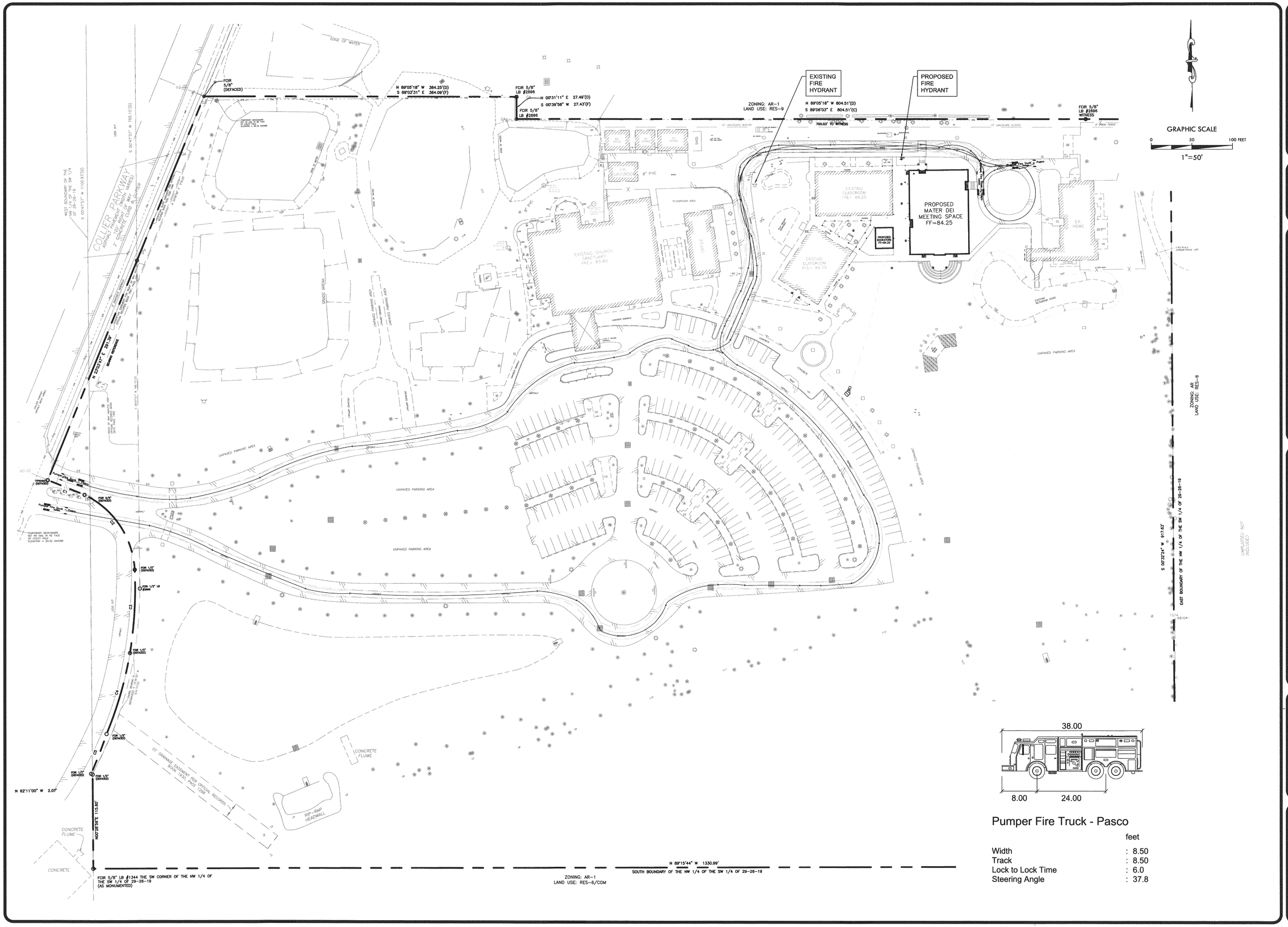

Pumper Fire Truck - Pasco

		feet
Width	:	8.50
Track	:	8.50
Lock to Lock Time	:	6.0
Steering Angle	:	37.8

REVISIONS	DATE	BY

This drawing and/or proposed fix, as indicated or described herein, is an instrument of service and shall remain the property of Adams. The reproduction, alteration or use for any purpose other than those authorized by the client for which it is designed is prohibited and illegal. Any reproduction, alteration or use for any purpose or in any manner, by any person other than the client for which it was intended, is prohibited and the client by whom furnished hereby agrees to indemnify and hold Adams harmless against all claims, losses, liabilities, and costs which may result from such reproduction, alteration or use.

© Copyright 2016, Adams Engineering

Adams
27524 Cashford Cr. Suite 101 ■ Wesley Chapel, Florida 33544 ■ (813) 929-7499

OUR LADY OF THE ROSARY MATER DEI ADDITION

FIRE TRUCK ANALYSIS

TIM D. HODES
LICENSE No 67017
STATE OF FLORIDA
PROFESSIONAL ENGINEER

Certificate Of Authorization: #27614

PROJECT MGR.	-
PROJECT TECH.	RRP
CHECKED BY	TDH
JOB NO.	2009.053
SHEET NO.	C4.2

© Copyright 2016, Adams Engineering

FULL PATH: I:_Projects\2009\2009.053 OLOR Catholic Church\Drawings\Mater Dei Addition\03-Production_Projects\2009\2009.053 OLOR Catholic Church\Drawings\Mater Dei Addition\03-Production\C4.2 FIRE TRUCK ANALYSIS
PLOTTED BY: Ricardo Rance
PLOT DATE: Wednesday, August 31, 2016
PLOT TIME: 8:53:49 PM
PLOTTER: Adobe PDF
FILENAME: C4.2 FIRE TRUCK ANALYSIS.dwg

FULL PATH: I:_Projects\2009\2009.053 OLOR Catholic Church\Drawings\Mater Dei Addition\03-Production_Projects\2009\2009.053 OLOR Catholic Church\Drawings\Mater Dei Addition\03-Production\C5.0 GRADING PLAN

PLOTTER: Adobe PDF

PLOT TIME: 9:49:48 AM

PLOT DATE: Thursday, September 01, 2016

PLOTTED BY: Ricardo Ramos

FILENAME: C5.0 GRADING PLAN.dwg

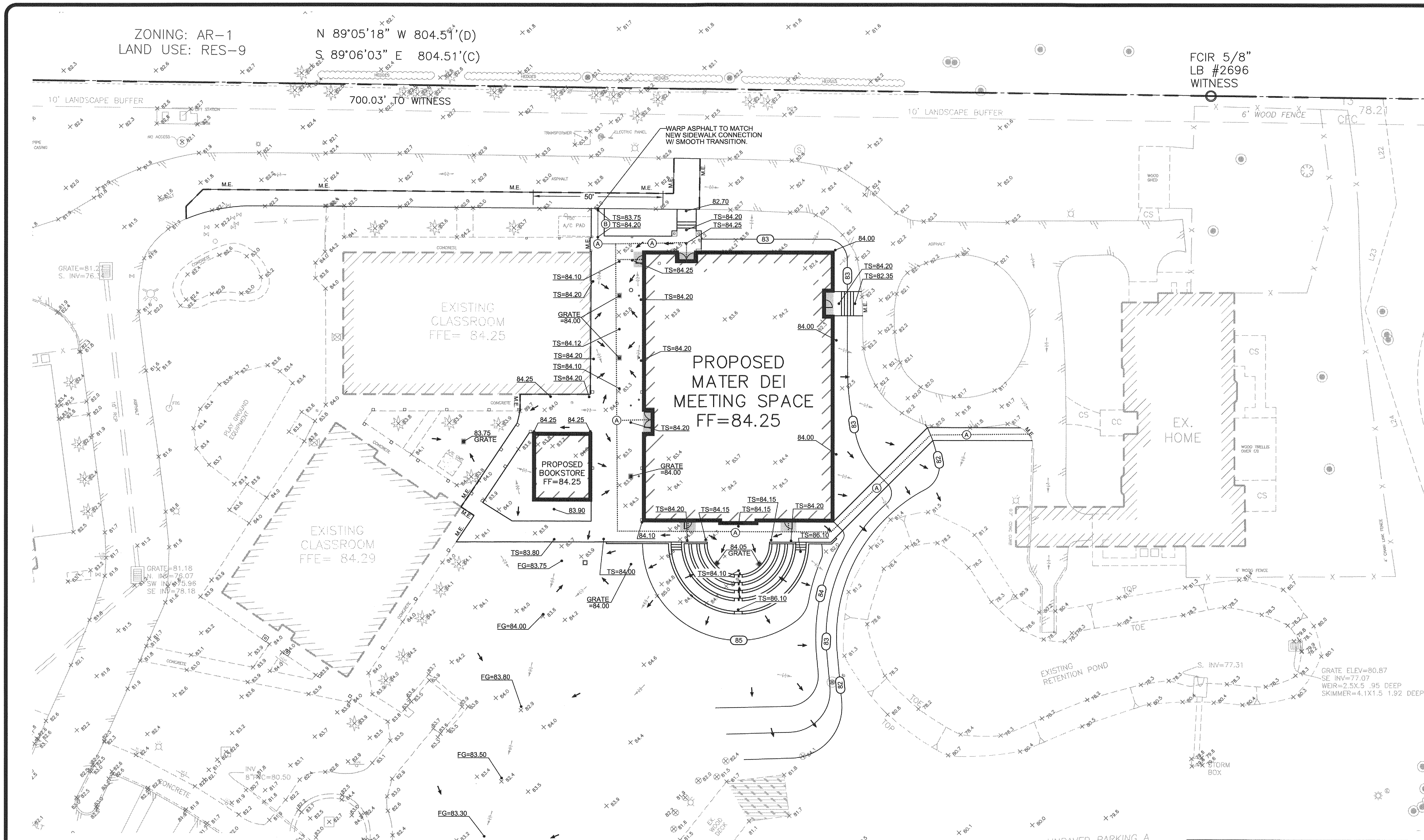

LEGEND

PROPOSED CONTOUR	(100)
ACCESSIBLE ROUTE	
FULL DEPTH SAW-CUT	
FLOWLINE	
PROPOSED SPOT GRADE	FG=100.50
EXISTING SPOT GRADE	99.99
EXISTING DRAINAGE DIRECTION	
PROPOSED DRAINAGE DIRECTION	
FF	FINISHED FLOOR
FG	FINISHED GRADE
TS	TOP OF SIDEWALK
M.E.	MATCH EXISTING

** FEMA NOTE **

Flood Statement: According to Community Panel No. 12101C0408F, Dated 09/26/2014, of the Federal Emergency Management Agency, National Flood Insurance Program Map, this property is within flood zone "X", which is not a special flood hazard area. If this site is not within an identified special flood hazard area, this flood statement does not imply that the property and/or the structures thereon will be free from flooding or flood damage. On rare occasions, greater floods can and will occur and flood heights may be increased by man-made or natural causes. This statement shall not create liability on the part of the Surveyor or Engineer.

** NOTICE TO CONTRACTORS - TOPOGRAPHIC SURVEY **

TOPOGRAPHIC INFORMATION TAKEN FROM A TOPOGRAPHIC SURVEY PERFORMED BY HAMILTON ENGINEERING AND SURVEYING. THE CONTRACTOR SHALL NOTIFY THE ENGINEER IMMEDIATELY, IN WRITING, OF ANY DISCREPANCIES OR OMISSIONS TO THE TOPOGRAPHIC INFORMATION. THE CONTRACTOR(S) SHALL BE RESPONSIBLE FOR CONFIRMING THE LOCATION (HORIZONTAL/VERTICAL) OF ANY BURIED CABLES, CONDUITS, PIPES, AND STRUCTURES (STORM SEWER, SANITARY SEWER, WATER, GAS, TELEVISION, TELEPHONE, ETC.) WHICH IMPACT THE CONSTRUCTION SITE. THE CONTRACTOR(S) SHALL NOTIFY THE OWNER AND ENGINEER IF ANY DISCREPANCIES ARE FOUND BETWEEN THE ACTUAL CONDITIONS VERSUS THE DATA CONTAINED IN THE CONSTRUCTION PLANS. ANY COSTS INCURRED AS THE RESULT OF NOT CONFIRMING THE ACTUAL LOCATION (HORIZONTAL/VERTICAL) OF SAID CABLES, CONDUITS, PIPES, AND STRUCTURES SHALL BE BORNE BY THE CONTRACTOR. ADDITIONALLY, THE CONTRACTOR(S) SHALL NOTIFY THE OWNER AND ENGINEER IF ANY ERRORS OR DISCREPANCIES ARE FOUND ON THE CONSTRUCTION DOCUMENTS (PS&E), WHICH NEGATIVELY IMPACT THE PROJECT. THE ENGINEER AND OWNER SHALL BE INDEMNIFIED OF PROBLEMS AND/OR COST WHICH MAY RESULT FROM CONTRACTOR'S FAILURE TO NOTIFY ENGINEER AND OWNER.

BENCHMARK DESCRIPTION

THE ELEVATIONS SHOWN HEREON ARE BASED ON THE NORTH AMERICAN VERTICAL DATUM OF 1988 (N.A.V.D. 1988) AS ESTABLISHED FROM N.G.S. MONUMENT "P-684", WITH AN ELEVATION OF 79.21 FEET N.A.V.D. 1988

NOTICE TO CONTRACTORS - UTILITIES

THE CONTRACTOR IS SPECIFICALLY CAUTIONED THAT THE LOCATION AND/OR ELEVATION OF ANY EXISTING UTILITIES AS SHOWN ON THESE PLANS ARE BASED ON RECORDS OF THE VARIOUS UTILITY COMPANIES, THE GOVERNING MUNICIPALITY, AND WHERE POSSIBLE, MEASUREMENTS TAKEN IN THE FIELD. THE INFORMATION PROVIDED IS NOT TO BE RELIED ON AS BEING EXACT OR COMPLETE. THE CONTRACTOR MUST CALL THE APPROPRIATE UTILITY COMPANY AT LEAST 48 HOURS BEFORE ANY EXCAVATION TO REQUEST EXACT FIELD LOCATION OF UTILITIES. IT SHALL BE THE RESPONSIBILITY OF THE CONTRACTOR TO RELOCATE ALL EXISTING UTILITIES WHICH CONFLICT WITH THE PROPOSED IMPROVEMENTS SHOWN ON THESE PLANS.

!!!CAUTION!!!

EXISTING OVERHEAD & UNDERGROUND UTILITIES IN THE VICINITY. VERIFY LOCATION OF EXISTING UNDERGROUND UTILITIES BY VACUUM EXCAVATION OR OTHER POTHOLING TECHNIQUES.

811

Know what's **below.**
Call before you dig.

THESE PLANS ARE SUBJECT TO REVIEW & APPROVAL BY JURISDICTIONAL ENTITIES.

*** CONSTRUCTION NOTES ***

1. THE EARTHWORK FOR ALL BUILDING FOUNDATIONS AND SLABS SHALL BE IN ACCORDANCE WITH ARCHITECTURAL BUILDING PLANS AND SPECIFICATIONS.
2. ADJUST PAVEMENT AND/OR CURB ELEVATIONS AS NECESSARY TO ASSURE AS SMOOTH FIT AND CONTINUOUS GRADE WITH EXISTING.
3. CONTRACTOR IS RESPONSIBLE FOR VERIFYING ALL UTILITIES AND NOTIFYING THE APPROPRIATE UTILITY COMPANY PRIOR TO BEGINNING CONSTRUCTION.
4. CONTRACTOR SHALL VERIFY HORIZONTAL AND VERTICAL LOCATION OF ALL EXISTING STORM SEWER STRUCTURES, PIPES, AND ALL UTILITIES PRIOR TO CONSTRUCTION.
5. CONTRACTOR IS RESPONSIBLE FOR REPAIRS OF DAMAGE TO ANY EXISTING IMPROVEMENTS DURING CONSTRUCTION, SUCH AS BUT NOT LIMITED TO DRAINAGE, UTILITIES, PAVEMENT, STRIPING, CURBS, ETC. REPAIRS SHALL BE EQUAL TO OR BETTER THAN EXISTING CONDITIONS.
6. CONTRACTOR TO ADJUST ALL UTILITY BOXES, COVERS, CLEAN-OUTS, ETC. TO FINISHED GRADE. ADD EXTENSIONS/MODIFIED TOPS AS NECESSARY.
7. PROPOSED SPOT GRADES SHOWN ARE TO TOP OF PAVEMENT UNLESS OTHERWISE NOTED.
8. EXISTING AND PROPOSED GRADE CONTOUR INTERVALS SHOWN AT ONE FOOT (1')
9. ALL UN-SURFACED AREAS DISTURBED BY GRADING OPERATION SHALL RECEIVE FOUR (4) INCHES OF TOPSOIL. CONTRACTOR SHALL APPLY STABILIZATION FABRIC TO ALL SLOPES 3H:1V OR STEEPER. CONTRACTOR SHALL GRASS DISTURBED AREAS IN ACCORDANCE WITH STANDARD SPECIFICATIONS UNTIL A HEALTHY STAND OF GRASS IS OBTAINED.
10. FOR LOCATION OF ALL UTILITY ENTRANCES, SEE ARCHITECTURAL PLANS AND SPECIFICATIONS.
11. CONTRACTOR SHALL COORDINATE WITH ARCHITECTURAL PLANS, POWER COMPANY, TELEPHONE COMPANY & GAS COMPANY FOR ACTUAL ROUTING OF POWER AND SERVICES TO BUILDING.
12. CONSTRUCTION SHALL COMPLY WITH ALL GOVERNING CODES AND BE CONSTRUCTED TO SAME.
13. AFTER PERMITS HAVE BEEN OBTAINED & EROSION CONTROL MEASURES INSTALLED, THE CONTRACTOR SHALL GRADE BUILDING PAD TO 0 TO -1/2" OF SUBGRADE.

2012 FLORIDA ACCESSIBILITY CODE

Ⓐ ACCESSIBLE ROUTES: (CHAPTER 4 - SECTION 403)

The running slope of walking surfaces shall not be steeper than 1:20. The cross slope of walking surfaces shall not be steeper than 1:48.

The clear width of walking surfaces shall be 36 inches minimum. The clear width shall be permitted to be reduced to 32 inches minimum for a legth of 24 inches maximum provided that reduced width segments are separated by segments that are 48 inches long minimum and 36 inches wide minimum. Where the accessible route makes a 180 degree turn around an element which is less than 48 inches wide, clear width shall be 42 inches minimum approaching the turn, 48 inches minimum at the turn and 42 inches minimum leaving the turn. An accessible route with a clear width less than 60 inches shall provide passing spaces at intervals of 200 feet maximum. Passing spaces shall be at least 60 inches by 60 inches minimum.

Ⓑ RAMPS: (CHAPTER 4 - SECTION 405)

Ramp runs shall have a running slope not steeper than 1:12. The cross slope of ramp runs shall not be steeper than 1:48. Changes in level other than the running slope and cross slope are not permitted on ramp runs.

The clear width of a ramp run and, where handrails are provided, the clear width between handrails shall be 36 inches minimum.

The rise for any ramp run shall be 30 inches maximum. Ramps shall have landings at the top and the bottom of each ramp run. Landings slopes shall not be steeper than 1:48. The landing clear width shall be at least as wide as the widest ramp run leading to the landing. The landing clear length shall be 60 inches long minimum. Ramps that change directions between runs at landings shall have a clear landing 60 inches by 60 inches minimum.

Ramp runs with a rise greater than 6 inches shall have handrails complying with Section 505. Edge protection shall be provided on each side of ramp runs and at each side of ramp landing complying with Section 405.9. The floor or ground surface of the ramp run or landing shall extend 12 inches minimum beyond the inside face of a handrail.

Ⓒ CURB RAMPS: (CHAPTER 4 - SECTION 406)

Curb ramp runs shall have a running slope not steeper than 1:12. The cross slope of ramp runs shall not be steeper than 1:48. Counter slopes of adjoining gutters and road surfaces immediately adjacent to the curb ramp shall not be steeper than 1:20. The adjacent surfaces at transitions at curb ramps to walk, gutters, and streets shall be at the same level.

Where provided, curb ramp flares shall not be steeper than 1:10.

Landings shall be provided at the tops of curb ramps. The landing clear length shall be 36 inches minimum. The landing clear width shall be at least as wide as the curb ramp, excluding flared sides, leading to the landing. In alterations, where there is no landing at the top of curb ramps, curb ramp flares shall be provided and shall not be steeper than 1:12.

Curb ramps and the flared sides of curb ramps shall be located so that they do not project into vertical traffic lanes, parking spaces, or parking access aisles.

Raised islands in crossings shall be cut through level with the street or have curb ramps at both sides. Each curb ramp shall have a level area 48 inches long minimum by 36 inches wide minimum at the top of the curb ramp in the part of the island intersected by the crossing.

Detectable warning shall extend the full width of the curb ramp and shall extend either the full depth of the curb ramp or 24 inches deep minimum measured from the back of the curb on the ramp surface.

Ⓓ PARKING SPACES: (CHAPTER 5 - SECTION 502)

Each parking space must be at least 12 feet wide, shall be marked to define the width, and shall have an adjacent access aisle. Access aisles shall adjoin an accessible route that is at least 44 inches wide so that users are not compelled to walk or wheel behind parked vehicles. Access aisles serving car and van parking spaces shall be 60 inches wide minimum. Two parking spaces shall be permitted to share a common access aisle. Access aisles shall extend the full length of the parking spaces they serve. The access aisles must be striped diagonally to designate it as a no-parking zone

Access aisles shall be at the same level as the parking spaces they serve and slopes shall not be steeper than 1:48 in all directions.

Each accessible parking space must be prominently outlined with blue striping to be clearly distinguishable as a parking space designated for persons who have disabilities and must be posted with a permanent above-grade sign bearing the international symbol of accessibility, meeting the requirements of color and design approved by the Department of Transportation and the caption "parking by disabled permit only". Posted signage shall also indicate the penalty for illegal use of the space per jurisdictional entity.

Ⓔ DETECTABLE WARNINGS: (CHAPTER 7 - SECTION 705)

Detectable warnings shall consist of a surface of truncated domes and shall comply with section 705. Detectable warning surfaces shall contrast visually with adjacent walking surfaces either light-on-dark, or dark-on-light. Detectable warning surfaces at platform boarding edges shall be 24 inches wide and shall extend the full length of the public use area of the platform.

REVISIONS	DATE	BY

This drawing was prepared by Adams Consulting Engineers, Inc. (Adams) as an instrument of service, and shall remain the property of Adams. The information hereon shall be used only by the client to whom the services are rendered and only for the purpose of constructing or installing the work as shown at the designated location and site. Any other use, including (without limitation) any reproduction or alteration, is strictly prohibited, and the user shall hold harmless and indemnify Adams from all liabilities which may arise from such unauthorized use.

© Copyright 2016, Adams Engineering

Adams

27524 Cashford Cr. Suite 101 ■ Wesley Chapel, Florida 33544 ■ (813) 929-7499

OUR LADY OF THE ROSARY MATER DEI ADDITION

GRADING PLAN

TIM D. HODES LICENSE No 67017 STATE OF FLORIDA PROFESSIONAL ENGINEER 9-1-16

Certificate Of Authorization: #27614

PROJECT MGR.	-
PROJECT TECH.	RRP
CHECKED BY	TDH
JOB NO.	2009.053
SHEET NO.	C5.0

© Copyright 2016, Adams Engineering

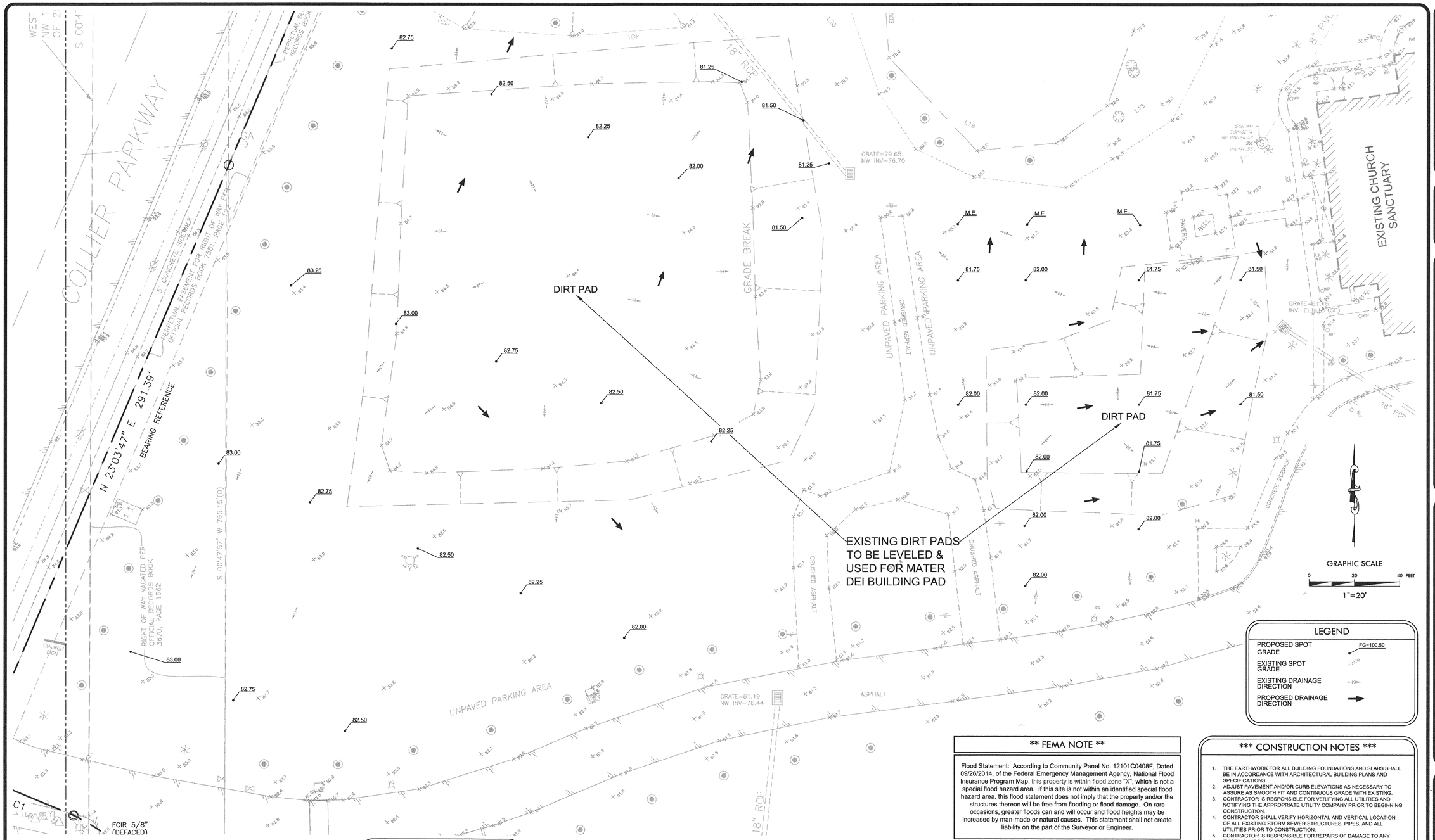

LEGEND

PROPOSED SPOT GRADE	FG=100.50
EXISTING SPOT GRADE	123.99
EXISTING DRAINAGE DIRECTION	
PROPOSED DRAINAGE DIRECTION	

** NOTICE TO CONTRACTORS - TOPOGRAPHIC SURVEY **

TOPOGRAPHIC INFORMATION TAKEN FROM A TOPOGRAPHIC SURVEY PERFORMED BY HAMILTON ENGINEERING AND SURVEYING. THE CONTRACTOR SHALL NOTIFY THE ENGINEER IMMEDIATELY, IN WRITING, OF ANY DISCREPANCIES OR OMISSIONS TO THE TOPOGRAPHIC INFORMATION. THE CONTRACTOR(S) SHALL BE RESPONSIBLE FOR CONFIRMING THE LOCATION (HORIZONTAL/VERTICAL) OF ANY BURIED CABLES, CONDUITS, PIPES, AND STRUCTURES (STORM SEWER, SANITARY SEWER, WATER, GAS, TELEVISION, TELEPHONE, ETC.) WHICH IMPACT THE CONSTRUCTION SITE. THE CONTRACTOR(S) SHALL NOTIFY THE OWNER AND ENGINEER IF ANY DISCREPANCIES ARE FOUND BETWEEN THE ACTUAL CONDITIONS VERSUS THE DATA CONTAINED IN THE CONSTRUCTION PLANS. ANY COSTS INCURRED AS THE RESULT OF NOT CONFIRMING THE ACTUAL LOCATION (HORIZONTAL/VERTICAL) OF SAID CABLES, CONDUITS, PIPES, AND STRUCTURES SHALL BE BORNE BY THE CONTRACTOR. ADDITIONALLY, THE CONTRACTOR(S) SHALL NOTIFY THE OWNER AND ENGINEER IF ANY ERRORS OR DISCREPANCIES ARE FOUND ON THE CONSTRUCTION DOCUMENTS (PS&E), WHICH NEGATIVELY IMPACT THE PROJECT. THE ENGINEER AND OWNER SHALL BE INDEMNIFIED OF PROBLEMS AND/OR COST WHICH MAY RESULT FROM CONTRACTOR'S FAILURE TO NOTIFY ENGINEER AND OWNER.

BENCHMARK DESCRIPTION

THE ELEVATIONS SHOWN HEREON ARE BASED ON THE NORTH AMERICAN VERTICAL DATUM OF 1988 (N.A.V.D. 1988) AS ESTABLISHED FROM N.G.S. MONUMENT "P-684", WITH AN ELEVATION OF 79.21 FEET N.A.V.D. 1988

NOTICE TO CONTRACTORS - UTILITIES

THE CONTRACTOR IS SPECIFICALLY CAUTIONED THAT THE LOCATION AND/OR ELEVATION OF ANY EXISTING UTILITIES AS SHOWN ON THESE PLANS ARE BASED ON RECORDS OF THE VARIOUS UTILITY COMPANIES, THE GOVERNING MUNICIPALITY, AND WHERE POSSIBLE, MEASUREMENTS TAKEN IN THE FIELD. THE INFORMATION PROVIDED IS NOT TO BE RELIED ON AS BEING EXACT OR COMPLETE. THE CONTRACTOR MUST CALL THE APPROPRIATE UTILITY COMPANY AT LEAST 48 HOURS BEFORE ANY EXCAVATION TO REQUEST EXACT FIELD LOCATION OF UTILITIES. IT SHALL BE THE RESPONSIBILITY OF THE CONTRACTOR TO RELOCATE ALL EXISTING UTILITIES WHICH CONFLICT WITH THE PROPOSED IMPROVEMENTS SHOWN ON THESE PLANS.

!!!CAUTION!!!

EXISTING OVERHEAD & UNDERGROUND UTILITIES IN THE VICINITY. VERIFY LOCATION OF EXISTING UNDERGROUND UTILITIES BY VACUUM EXCAVATION OR OTHER POTHOLING TECHNIQUES.

811 Know what's below. Call before you dig.

THESE PLANS ARE SUBJECT TO REVIEW & APPROVAL BY JURISDICTIONAL ENTITIES.

** FEMA NOTE **

Flood Statement: According to Community Panel No. 12101C0408F, Dated 09/26/2014, of the Federal Emergency Management Agency, National Flood Insurance Program Map, this property is within flood zone "X", which is not a special flood hazard area. If this site is not within an identified special flood hazard area, this flood statement does not imply that the property and/or the structures thereon will be free from flooding or flood damage. On rare occasions, greater floods can and will occur and flood heights may be increased by man-made or natural causes. This statement shall not create liability on the part of the Surveyor or Engineer.

*** CONSTRUCTION NOTES ***

1. THE EARTHWORK FOR ALL BUILDING FOUNDATIONS AND SLABS SHALL BE IN ACCORDANCE WITH ARCHITECTURAL BUILDING PLANS AND SPECIFICATIONS.
2. ADJUST PAVEMENT AND/OR CURB ELEVATIONS AS NECESSARY TO ASSURE AS SMOOTH FIT AND CONTINUOUS GRADE WITH EXISTING.
3. CONTRACTOR IS RESPONSIBLE FOR VERIFYING ALL UTILITIES AND NOTIFYING THE APPROPRIATE UTILITY COMPANY PRIOR TO BEGINNING CONSTRUCTION.
4. CONTRACTOR SHALL VERIFY HORIZONTAL AND VERTICAL LOCATION OF ALL EXISTING STORM SEWER STRUCTURES, PIPES, AND ALL UTILITIES PRIOR TO CONSTRUCTION.
5. CONTRACTOR IS RESPONSIBLE FOR REPAIRS OF DAMAGE TO ANY EXISTING IMPROVEMENTS DURING CONSTRUCTION, SUCH AS BUT NOT LIMITED TO DRAINAGE, UTILITIES, PAVEMENT, STRIPING, CURBS, ETC. REPAIRS SHALL BE EQUAL TO OR BETTER THAN EXISTING CONDITIONS.
6. CONTRACTOR TO ADJUST ALL UTILITY BOXES, COVERS, CLEAN-OUTS, ETC. TO FINISHED GRADE. ADD EXTENSIONS/MODIFIED TOPS AS NECESSARY.
7. PROPOSED SPOT GRADES SHOWN ARE TO TOP OF PAVEMENT UNLESS OTHERWISE NOTED.
8. EXISTING AND PROPOSED GRADE CONTOUR INTERVALS SHOWN AT ONE FOOT (1').
9. ALL UN-SURFACED AREAS DISTURBED BY GRADING OPERATION SHALL RECEIVE FOUR (4) INCHES OF TOPSOIL. CONTRACTOR SHALL APPLY STABILIZATION FABRIC TO ALL SLOPES 3H:1V OR STEEPER. CONTRACTOR SHALL GRASS DISTURBED AREAS IN ACCORDANCE WITH STANDARD SPECIFICATIONS UNTIL A HEALTHY STAND OF GRASS IS OBTAINED.
10. FOR LOCATION OF ALL UTILITY ENTRANCES, SEE ARCHITECTURAL PLANS AND SPECIFICATIONS.
11. CONTRACTOR SHALL COORDINATE WITH ARCHITECTURAL PLANS, POWER COMPANY, TELEPHONE COMPANY & GAS COMPANY FOR ACTUAL ROUTING OF POWER AND SERVICES TO BUILDING.
12. CONSTRUCTION SHALL COMPLY WITH ALL GOVERNING CODES AND BE CONSTRUCTED TO SAME.
13. AFTER PERMITS HAVE BEEN OBTAINED & EROSION CONTROL MEASURES INSTALLED, THE CONTRACTOR SHALL GRADE BUILDING PAD TO 0 TO -1/2" OF SUBGRADE.

REVISIONS	DATE	BY

This drawing was prepared by Adams Engineering, Inc. Adams is an instrument of service and is the property of Adams. The information shown is intended only for the client to whom the seal is addressed and for the purpose of constructing or permitting improvements on the designated location and site. Any other use of the information (or portion) are reproduction or modification without written consent and the user shall hold harmless Adams for any damages to the facilities which may arise from such unauthorized use.

© Copyright 2016, Adams Engineering

Adams
27524 Cashford Cr. Suite 101 ■ Wesley Chapel, Florida 33544 ■ (813) 929-7499

OUR LADY OF THE ROSARY MATER DEI ADDITION

GRADING PLAN

TIM D. HODGES
LICENSED
No 67017
STATE OF FLORIDA
PROFESSIONAL ENGINEER

Certificate Of Authorization: #27614

PROJECT MGR.	-
PROJECT TECH.	RRP
CHECKED BY	TDH
JOB NO.	2009.053
SHEET NO.	C5.1

© Copyright 2016, Adams Engineering

FULL PATH: H:_Projects\2009\2009.053 OLQR Catholic Church\Drawings\Mater Dei Addition\03-Production_Projects\2009\2009.053 OLQR Catholic Church\Drawings\Mater Dei Addition\03-Production\C5.1 GRADING PLAN
PLOTTED BY: Ricardo Ramos
PLOT DATE: Wednesday, August 31, 2016
PLOT TIME: 4:32:54 PM
PLOTTER: Adobe PDF
FILENAME: C5.1 GRADING PLAN.dwg

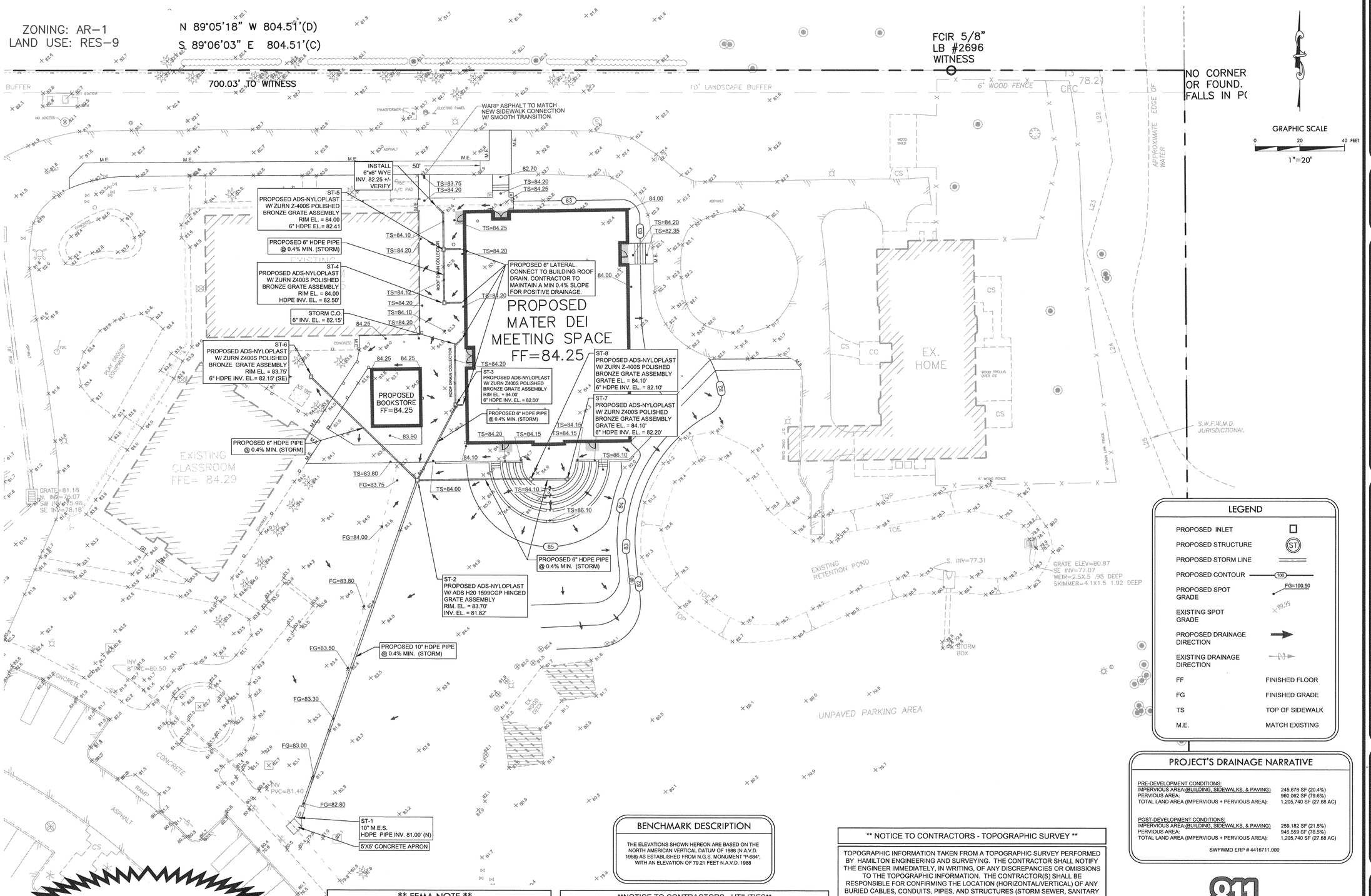

LEGEND

PROPOSED INLET	
PROPOSED STRUCTURE	ST
PROPOSED STORM LINE	
PROPOSED CONTOUR	100
PROPOSED SPOT GRADE	FG=100.50
EXISTING SPOT GRADE	+99.99
PROPOSED DRAINAGE DIRECTION	
EXISTING DRAINAGE DIRECTION	
FF	FINISHED FLOOR
FG	FINISHED GRADE
TS	TOP OF SIDEWALK
M.E.	MATCH EXISTING

PROJECT'S DRAINAGE NARRATIVE

PRE-DEVELOPMENT CONDITIONS:

IMPERVIOUS AREA (BUILDING, SIDEWALKS, & PAVING)	245,678 SF (20.4%)
PERVIOUS AREA:	960,062 SF (79.6%)
TOTAL LAND AREA (IMPERVIOUS + PERVIOUS AREA):	1,205,740 SF (27.68 AC)

POST-DEVELOPMENT CONDITIONS:

IMPERVIOUS AREA (BUILDING, SIDEWALKS, & PAVING)	259,182 SF (21.5%)
PERVIOUS AREA:	946,559 SF (78.5%)
TOTAL LAND AREA (IMPERVIOUS + PERVIOUS AREA):	1,205,740 SF (27.68 AC)

SWFWMD ERP # 4416711.000

BENCHMARK DESCRIPTION

THE ELEVATIONS SHOWN HEREON ARE BASED ON THE NORTH AMERICAN VERTICAL DATUM OF 1988 (N.A.V.D. 1988) AS ESTABLISHED FROM N.G.S. MONUMENT "P-684", WITH AN ELEVATION OF 79.21 FEET N.A.V.D. 1988

** NOTICE TO CONTRACTORS - TOPOGRAPHIC SURVEY **

TOPOGRAPHIC INFORMATION TAKEN FROM A TOPOGRAPHIC SURVEY PERFORMED BY HAMILTON ENGINEERING AND SURVEYING. THE CONTRACTOR SHALL NOTIFY THE ENGINEER IMMEDIATELY, IN WRITING, OF ANY DISCREPANCIES OR OMISSIONS TO THE TOPOGRAPHIC INFORMATION. THE CONTRACTOR(S) SHALL BE RESPONSIBLE FOR CONFIRMING THE LOCATION (HORIZONTAL/VERTICAL) OF ANY BURIED CABLES, CONDUITS, PIPES, AND STRUCTURES (STORM SEWER, SANITARY SEWER, WATER, GAS, TELEVISION, TELEPHONE, ETC.) WHICH IMPACT THE CONSTRUCTION SITE. THE CONTRACTOR(S) SHALL NOTIFY THE OWNER AND ENGINEER IF ANY DISCREPANCIES ARE FOUND BETWEEN THE ACTUAL CONDITIONS VERSUS THE DATA CONTAINED IN THE CONSTRUCTION PLANS. ANY COSTS INCURRED AS THE RESULT OF NOT CONFIRMING THE ACTUAL LOCATION (HORIZONTAL/VERTICAL) OF SAID CABLES, CONDUITS, PIPES, AND STRUCTURES SHALL BE BORNE BY THE CONTRACTOR. ADDITIONALLY, THE CONTRACTOR(S) SHALL NOTIFY THE OWNER AND ENGINEER IF ANY ERRORS OR DISCREPANCIES ARE FOUND ON THE CONSTRUCTION DOCUMENTS (PS&E), WHICH NEGATIVELY IMPACT THE PROJECT. THE ENGINEER AND OWNER SHALL BE INDEMNIFIED OF PROBLEMS AND/OR COST WHICH MAY RESULT FROM CONTRACTOR'S FAILURE TO NOTIFY ENGINEER AND OWNER.

!!!CAUTION!!!

EXISTING OVERHEAD & UNDERGROUND UTILITIES IN THE VICINITY. VERIFY LOCATION OF EXISTING UNDERGROUND UTILITIES BY VACUUM EXCAVATION OR OTHER POTHOLING TECHNIQUES.

** FEMA NOTE **

Flood Statement: According to Community Panel No. 12101C0408F, Dated 09/26/2014, of the Federal Emergency Management Agency, National Flood Insurance Program Map, this property is within flood zone "X", which is not a special flood hazard area. If this site is not within an identified special flood hazard area, this flood statement does not imply that the property and/or the structures thereon will be free from flooding or flood damage. On rare occasions, greater floods can and will occur and flood heights may be increased by man-made or natural causes. This statement shall not create liability on the part of the Surveyor or Engineer.

NOTICE TO CONTRACTORS - UTILITIES

THE CONTRACTOR IS SPECIFICALLY CAUTIONED THAT THE LOCATION AND/OR ELEVATION OF ANY EXISTING UTILITIES AS SHOWN ON THESE PLANS ARE BASED ON RECORDS OF THE VARIOUS UTILITY COMPANIES, THE GOVERNING MUNICIPALITY, AND WHERE POSSIBLE, MEASUREMENTS TAKEN IN THE FIELD. THE INFORMATION PROVIDED IS NOT TO BE RELIED ON AS BEING EXACT OR COMPLETE. THE CONTRACTOR MUST CALL THE APPROPRIATE UTILITY COMPANY AT LEAST 48 HOURS BEFORE ANY EXCAVATION TO REQUEST EXACT FIELD LOCATION OF UTILITIES. IT SHALL BE THE RESPONSIBILITY OF THE CONTRACTOR TO RELOCATE ALL EXISTING UTILITIES WHICH CONFLICT WITH THE PROPOSED IMPROVEMENTS SHOWN ON THESE PLANS.

Know what's below. Call before you dig.

THESE PLANS ARE SUBJECT TO REVIEW & APPROVAL BY JURISDICTIONAL ENTITIES.

REVISIONS	DATE	BY

This drawing was prepared by Adams as an instrument of service and shall remain the property of Adams. The information shown is intended only for the client to whom the drawing is addressed and for the purpose of constructing or permitting the improvements on the designated location and site. Any other use, including but not limited to, extrapolation, any reproduction or transmittal to other parties, is prohibited without written consent of Adams and the user shall hold harmless Adams from any and all claims and liabilities which may arise from such unauthorized use.

© Copyright 2016, Adams Engineering

Adams
27524 Cashford Cr. Suite 101 ■ Wesley Chapel, Florida 33544 ■ (813) 929-7499

OUR LADY OF THE ROSARY MATER DEI ADDITION

DRAINAGE PLAN

TIM D. HODES LICENSE No 67017 STATE OF FLORIDA PROFESSIONAL ENGINEER
9-1-16

Certificate Of Authorization: #27614

PROJECT MGR.	-
PROJECT TECH.	RRP
CHECKED BY	TDH
JOB NO.	2009.053
SHEET NO.	C6.0

© Copyright 2016, Adams Engineering

FULL PATH: I:_Projects\2009\2009.053 OLOR Catholic Church\Drawings\Mater Dei Addition\03-Production\C6.0 DRAINAGE PLAN
PLOTTER: Adobe PDF
PLOT TIME: 9:32:06 AM
PLOT DATE: Thursday, September 01, 2016
PLOTTED BY: Rosario Ramos
FILENAME: C6.0 DRAINAGE PLAN.dwg

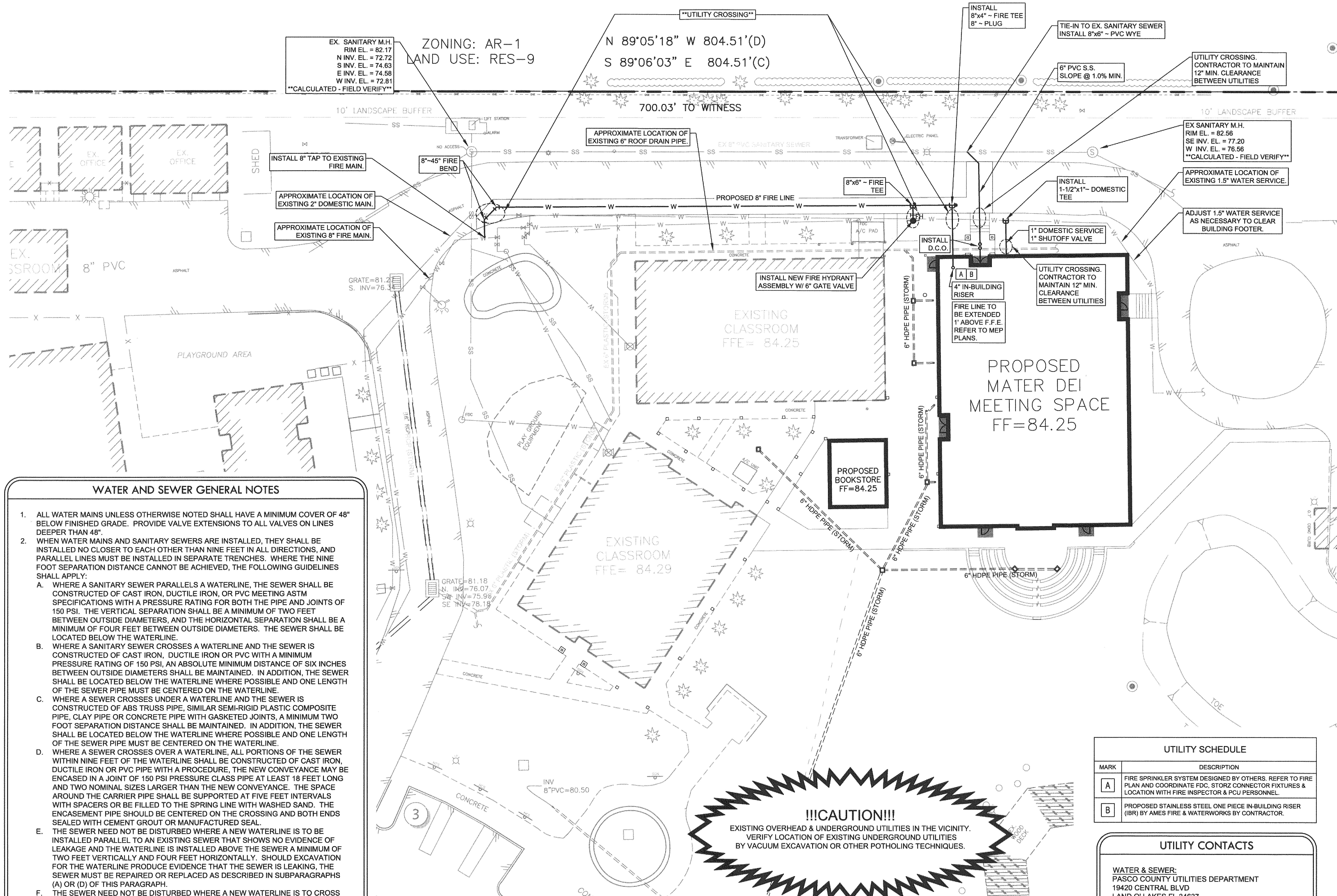

WATER AND SEWER GENERAL NOTES

1. ALL WATER MAINS UNLESS OTHERWISE NOTED SHALL HAVE A MINIMUM COVER OF 48" BELOW FINISHED GRADE. PROVIDE VALVE EXTENSIONS TO ALL VALVES ON LINES DEEPER THAN 48".
2. WHEN WATER MAINS AND SANITARY SEWERS ARE INSTALLED, THEY SHALL BE INSTALLED NO CLOSER TO EACH OTHER THAN NINE FEET IN ALL DIRECTIONS, AND PARALLEL LINES MUST BE INSTALLED IN SEPARATE TRENCHES. WHERE THE NINE FOOT SEPARATION DISTANCE CANNOT BE ACHIEVED, THE FOLLOWING GUIDELINES SHALL APPLY:
   A. WHERE A SANITARY SEWER PARALLELS A WATERLINE, THE SEWER SHALL BE CONSTRUCTED OF CAST IRON, DUCTILE IRON, OR PVC MEETING ASTM SPECIFICATIONS WITH A PRESSURE RATING FOR BOTH THE PIPE AND JOINTS OF 150 PSI. THE VERTICAL SEPARATION SHALL BE A MINIMUM OF TWO FEET BETWEEN OUTSIDE DIAMETERS, AND THE HORIZONTAL SEPARATION SHALL BE A MINIMUM OF FOUR FEET BETWEEN OUTSIDE DIAMETERS. THE SEWER SHALL BE LOCATED BELOW THE WATERLINE.
   B. WHERE A SANITARY SEWER CROSSES A WATERLINE AND THE SEWER IS CONSTRUCTED OF CAST IRON, DUCTILE IRON OR PVC WITH A MINIMUM PRESSURE RATING OF 150 PSI, AN ABSOLUTE MINIMUM DISTANCE OF SIX INCHES BETWEEN OUTSIDE DIAMETERS SHALL BE MAINTAINED. IN ADDITION, THE SEWER SHALL BE LOCATED BELOW THE WATERLINE WHERE POSSIBLE AND ONE LENGTH OF THE SEWER PIPE MUST BE CENTERED ON THE WATERLINE.
   C. WHERE A SEWER CROSSES UNDER A WATERLINE AND THE SEWER IS CONSTRUCTED OF ABS TRUSS PIPE, SIMILAR SEMI-RIGID PLASTIC COMPOSITE PIPE, CLAY PIPE OR CONCRETE PIPE WITH GASKETED JOINTS, A MINIMUM TWO FOOT SEPARATION DISTANCE SHALL BE MAINTAINED. IN ADDITION, THE SEWER SHALL BE LOCATED BELOW THE WATERLINE WHERE POSSIBLE AND ONE LENGTH OF THE SEWER PIPE MUST BE CENTERED ON THE WATERLINE.
   D. WHERE A SEWER CROSSES OVER A WATERLINE, ALL PORTIONS OF THE SEWER WITHIN NINE FEET OF THE WATERLINE SHALL BE CONSTRUCTED OF CAST IRON, DUCTILE IRON OR PVC PIPE WITH A PROCEDURE, THE NEW CONVEYANCE MAY BE ENCASED IN A JOINT OF 150 PSI PRESSURE CLASS PIPE AT LEAST 18 FEET LONG AND TWO NOMINAL SIZES LARGER THAN THE NEW CONVEYANCE. THE SPACE AROUND THE CARRIER PIPE SHALL BE SUPPORTED AT FIVE FEET INTERVALS WITH SPACERS OR BE FILLED TO THE SPRING LINE WITH WASHED SAND. THE ENCASEMENT PIPE SHOULD BE CENTERED ON THE CROSSING AND BOTH ENDS SEALED WITH CEMENT GROUT OR MANUFACTURED SEAL.
   E. THE SEWER NEED NOT BE DISTURBED WHERE A NEW WATERLINE IS TO BE INSTALLED PARALLEL TO AN EXISTING SEWER THAT SHOWS NO EVIDENCE OF LEAKAGE AND THE WATERLINE IS INSTALLED ABOVE THE SEWER A MINIMUM OF TWO FEET VERTICALLY AND FOUR FEET HORIZONTALLY. SHOULD EXCAVATION FOR THE WATERLINE PRODUCE EVIDENCE THAT THE SEWER IS LEAKING, THE SEWER MUST BE REPAIRED OR REPLACED AS DESCRIBED IN SUBPARAGRAPHS (A) OR (D) OF THIS PARAGRAPH.
   F. THE SEWER NEED NOT BE DISTURBED WHERE A NEW WATERLINE IS TO CROSS OVER (BY TWO FEET OR MORE) EXISTING SEWER SHOWING NO EVIDENCE OF LEAKAGE. SHOULD EXCAVATION FOR THE WATERLINE PRODUCE EVIDENCE THAT THE SEWER IS LEAKING, THEN THE SEWER MUST BE REPAIRED OR REPLACED AS DESCRIBED IN SUBSECTIONS (C) OR (D).
3. CONTRACTOR TO VERIFY ALL EXISTING SEWER FLOW LINES BEFORE BEGINNING CONSTRUCTION.
4. ALL SANITARY SEWER LINES SHALL BE TESTED IN ACCORDANCE WITH THE STANDARD CITY SPECIFICATIONS.
5. THE UTILITY CONTRACTOR SHALL INSTALL THE WATER SERVICES TO A POINT AS SHOWN ON THE PLANS. THE METER BOX SHALL BE FURNISHED AND INSTALLED BY THE CONTRACTOR AFTER THE PAVING CONTRACTOR HAS COMPLETED THE FINE GRADING BEHIND THE BACK OF THE CURB. EACH SERVICE LOCATION WILL BE MARKED ON THE CURB, WITH A BLUE LETTER "W" BY THE UTILITY CONTRACTOR AND TIED TO PROPERTY CORNERS ON THE "RECORD DRAWINGS".
6. ALL METER BOXES SHALL BE LOCATED IN NON-TRAFFIC AREAS.
7. VALVE BOXES SHALL BE FURNISHED AND SET ON EACH GATE VALVE. AFTER THE FINAL CLEANUP AND ALIGNMENT HAS BEEN COMPLETED, THE CONTRACTOR (UTILITY) SHALL POUR A CONCRETE BLOCK 24"X24"X6" AROUND ALL VALVE BOX TOPS SO THAT THE TOP OF BOX IS LEVEL WITH THE FINISHED GRADE. MARK WITH F OR O OR S IN CONCRETE.
8. CONTRACTOR SHALL RAISE/LOWER OR ADJUST ALL EXISTING UTILITY MAINS IN CONFLICT WITH PROPOSED UTILITIES AS PART OF THE BASE BIDS FOR ALL KNOWN OR UNKNOWN LINES.

** NOTICE TO CONTRACTORS - TOPOGRAPHIC SURVEY **

TOPOGRAPHIC INFORMATION TAKEN FROM A TOPOGRAPHIC SURVEY PERFORMED BY HAMILTON ENGINEERING AND SURVEYING. THE CONTRACTOR SHALL NOTIFY THE ENGINEER IMMEDIATELY, IN WRITING, OF ANY DISCREPANCIES OR OMISSIONS TO THE TOPOGRAPHIC INFORMATION. THE CONTRACTOR(S) SHALL BE RESPONSIBLE FOR CONFIRMING THE LOCATION (HORIZONTAL/VERTICAL) OF ANY BURIED CABLES, CONDUITS, PIPES, AND STRUCTURES (STORM SEWER, SANITARY SEWER, WATER, GAS, TELEVISION, TELEPHONE, ETC.) WHICH IMPACT THE CONSTRUCTION SITE. THE CONTRACTOR(S) SHALL NOTIFY THE OWNER AND ENGINEER IF ANY DISCREPANCIES ARE FOUND BETWEEN THE ACTUAL CONDITIONS VERSUS THE DATA CONTAINED IN THE CONSTRUCTION PLANS. ANY COSTS INCURRED AS THE RESULT OF NOT CONFIRMING THE ACTUAL LOCATION (HORIZONTAL/VERTICAL) OF SAID CABLES, CONDUITS, PIPES, AND STRUCTURES SHALL BE BORNE BY THE CONTRACTOR. ADDITIONALLY, THE CONTRACTOR(S) SHALL NOTIFY THE OWNER AND ENGINEER IF ANY ERRORS OR DISCREPANCIES ARE FOUND ON THE CONSTRUCTION DOCUMENTS (PS&E), WHICH NEGATIVELY IMPACT THE PROJECT. THE ENGINEER AND OWNER SHALL BE INDEMNIFIED OF PROBLEMS AND/OR COST WHICH MAY RESULT FROM CONTRACTOR'S FAILURE TO NOTIFY ENGINEER AND OWNER.

!!!CAUTION!!!

EXISTING OVERHEAD & UNDERGROUND UTILITIES IN THE VICINITY. VERIFY LOCATION OF EXISTING UNDERGROUND UTILITIES BY VACUUM EXCAVATION OR OTHER POTHOLING TECHNIQUES.

BENCHMARK DESCRIPTION

THE ELEVATIONS SHOWN HEREON ARE BASED ON THE NORTH AMERICAN VERTICAL DATUM OF 1988 (N.A.V.D. 1988) AS ESTABLISHED FROM N.G.S. MONUMENT "P-684", WITH AN ELEVATION OF 79.21 FEET N.A.V.D. 1988

NOTICE TO CONTRACTORS - UTILITIES

THE CONTRACTOR IS SPECIFICALLY CAUTIONED THAT THE LOCATION AND/OR ELEVATION OF ANY EXISTING UTILITIES AS SHOWN ON THESE PLANS ARE BASED ON RECORDS OF THE VARIOUS UTILITY COMPANIES, THE GOVERNING MUNICIPALITY, AND WHERE POSSIBLE, MEASUREMENTS TAKEN IN THE FIELD. THE INFORMATION PROVIDED IS NOT TO BE RELIED ON AS BEING EXACT OR COMPLETE. THE CONTRACTOR MUST CALL THE APPROPRIATE UTILITY COMPANY AT LEAST 48 HOURS BEFORE ANY EXCAVATION TO REQUEST EXACT FIELD LOCATION OF UTILITIES. IT SHALL BE THE RESPONSIBILITY OF THE CONTRACTOR TO RELOCATE ALL EXISTING UTILITIES WHICH CONFLICT WITH THE PROPOSED IMPROVEMENTS SHOWN ON THESE PLANS.

UTILITY SCHEDULE

MARK	DESCRIPTION
A	FIRE SPRINKLER SYSTEM DESIGNED BY OTHERS. REFER TO FIRE PLAN AND COORDINATE FDC, STORZ CONNECTOR FIXTURES & LOCATION WITH FIRE INSPECTOR & PCU PERSONNEL.
B	PROPOSED STAINLESS STEEL ONE PIECE IN-BUILDING RISER (IBR) BY AMES FIRE & WATERWORKS BY CONTRACTOR.

UTILITY CONTACTS

WATER & SEWER:
PASCO COUNTY UTILITIES DEPARTMENT
19420 CENTRAL BLVD
LAND O' LAKES FL 34637
PHONE: (813) 235-6189

ELECTRIC:
WITHLACHOOCHEE RIVER ELECTRIC COOPERATIVE
12013 HAYS ROAD
SHADY HILLS, FLORIDA 34610
PHONE: (727) 868-9465

TELEPHONE:
FRONTIER COMMUNICATIONS
1280 CLEVELAND STREET
CLEARWATER, FLORIDA 33755
ATTN: DAN SULLIVAN
PHONE: (727) 562-1190

GAS:
TECO/PEOPLES GAS
1400 CHANNELSIDE DRIVE
TAMPA, FLORIDA 33605
ATTN: KEN MIRACOLA
PHONE: (813) 927-7719

LEGEND

PROPOSED SANITARY SEWER	—— SS ——
PROPOSED WATER	—— W ——
PROPOSED FIRE HYDRANT	FH
EXISTING SANITARY SEWER	---- SS ----
EXISTING WATER	---- W ----

PIPE MATERIAL SPECIFICATIONS

SANITARY SEWER PIPE MATERIAL SPECIFICATIONS
ALL SANITARY SEWER PIPE SHALL MEET ASTM D3034, DR-26 & GREEN IN COLOR

WATER PIPE MATERIAL SPECIFICATIONS
3/4" TO 2" - POLYTHYLENE EXTRUSION TUBING (PET) SHALL MEET NSF, PE-3408, DR-9, 200 PSI (COPPER TUBING SIZE) & BE BLUE IN COLOR W/ BLACK LETTERING.

4" - AWWA C900 PVC, CLASS 150, DR-14 (OUTSIDE DIAMETER AS DIP)
OR
4" - ANSI/AWWA C151/A DUCTILE IRON, CLASS 50

ALL WATER LINES MUST BE INSTALLED A MINIMUM OF 36" BELOW FINISH GRADE.

WATER LINES SHALL BE INSTALLED ABOVE SEWER LINES WHEN POSSIBLE.

WATER LINES SHALL HAVE 12" VERTICAL CLEARANCE AT SANITARY SEWER CROSSINGS.

*** UTILITY GENERAL NOTES ***

1. CONTRACTOR TO EXPOSE & VERIFY ALL UTILITY CONNECTION POINTS & AREAS OF POTENTIAL CONFLICTS PRIOR TO MOBILIZATION. CONTRACTOR TO NOTIFY ENGINEER OF RECORD OF ANY UTILITY CONFLICTS DURING INSPECTION POTHOLE.
2. ALL WATER CONSTRUCTION TO THE POINT OF METERING TO BE IN ACCORDANCE WITH FGUA STANDARD SPECIFICATION.
3. INSTALL COUNTY APPROVED REFLECTORIZED PAVEMENT MARKINGS/ BUTTONS & FIRE DEPARTMENT SIGNAGE AS REQUIRED BY JURISDICTIONAL FIRE DEPARTMENT.
4. ALL UTILITY AND ELECTRICAL/CONDUIT RUNS ARE SCHEMATIC ONLY. LOT LIGHTS ARE TO BE WIRED TO 2 (TWO) OR MORE CIRCUITS IN AN ALTERNATING SEQUENCE.
5. THE CONTRACTOR SHALL VERIFY LOCATION AND FLOWLINE OF EXISTING SANITARY SEWER MAIN TO BE USED, AND SHALL INSTALL SANITARY SEWER LINE AT MINIMUM SLOPES PER GOVERNING AUTHORITY'S DESIGN SPECIFICATIONS.
6. PRIVATE UTILITY CONNECTIONS SHOWN AS SCHEMATIC ONLY. CONTRACTOR TO COORDINATE WITH UTILITY COMPANY PRIOR TO BID.
7. MANHOLES/VALVE BOXES/CLEANOUTS WITHIN PAVEMENT AREAS SHALL HAVE A 6" MIN. THICK CONCRETE PAVEMENT PAD AROUND THE RIM/LID. A 2'x2' SQUARE FOR CLEANOUTS & VALVE BOXES AND A 6'x6' SQUARE FOR MANHOLES. ALL ASPHALT PAVEMENT SHALL BE REMOVED ALONG NEAT SAW CUT LINES.
8. CONTRACTOR TO ADJUST ALL UTILITY BOXES, COVERS, CLEAN-OUTS, ETC. TO FINISHED GRADE. ADD EXTENSIONS/MODIFIED TOPS AS NECESSARY.

811 Know what's below. Call before you dig.

THESE PLANS ARE SUBJECT TO REVIEW & APPROVAL BY JURISDICTIONAL ENTITIES.

REVISIONS	DATE	BY

This drawing was prepared by Adams Consulting Engineers, Inc. (Adams) as an instrument of service, and shall remain the property of Adams. The information hereon shall be used only by the client to whom the services are rendered and only for the purpose of constructing or installing the work as shown at the designated location and site. Any other use, including (without limitation) any reproduction or alteration, is strictly prohibited, and the user shall hold harmless and indemnify Adams from all liabilities which may arise from such unauthorized use. © Copyright 2016, Adams Engineering

Adams
27524 Cashford Cr. Suite 101 ■ Wesley Chapel, Florida 33544 ■ (813) 929-7499

OUR LADY OF THE ROSARY MATER DEI ADDITION

UTILITY PLAN

TIM D. HODES LICENSE No 67017 STATE OF FLORIDA PROFESSIONAL ENGINEER 9-1-16

Certificate Of Authorization: #27614

PROJECT MGR.	-
PROJECT TECH.	RRP
CHECKED BY	TDH
JOB NO.	2009.053
SHEET NO.	C7.0

© Copyright 2016, Adams Engineering

FULL PATH: I:_Projects\2009\2009.053 OLOR Catholic Church\Drawings\Mater Dei Addition\03-Production\I_Projects\2009\2009.053 OLOR Catholic Church\Drawings\Mater Dei Addition\03-Production\C7.0 UTILITY PLAN
PLOTTER: Adobe PDF
PLOT TIME: 6:14:26 PM
PLOT DATE: Wednesday, August 31, 2016
PLOTTED BY: Ricardo Ramos
FILENAME: C7.0 UTILITY PLAN.dwg

FULL PATH: I:_Projects\2009\2009.053 OLOR Catholic Church\Drawings\Mater Dei Addition\03-Production_Projects\2009\2009.053 OLOR Catholic Church\Drawings\Mater Dei Addition\03-Production\C7.1 UTILITY DETAILS -

PLOTTER: Adobe PDF   PLOT TIME: 4:52:12 PM   PLOT DATE: Wednesday, August 31, 2016   PLOTTED BY: Ricardo Ramos   FILENAME: C7.1 UTILITY DETAILS -.dwg

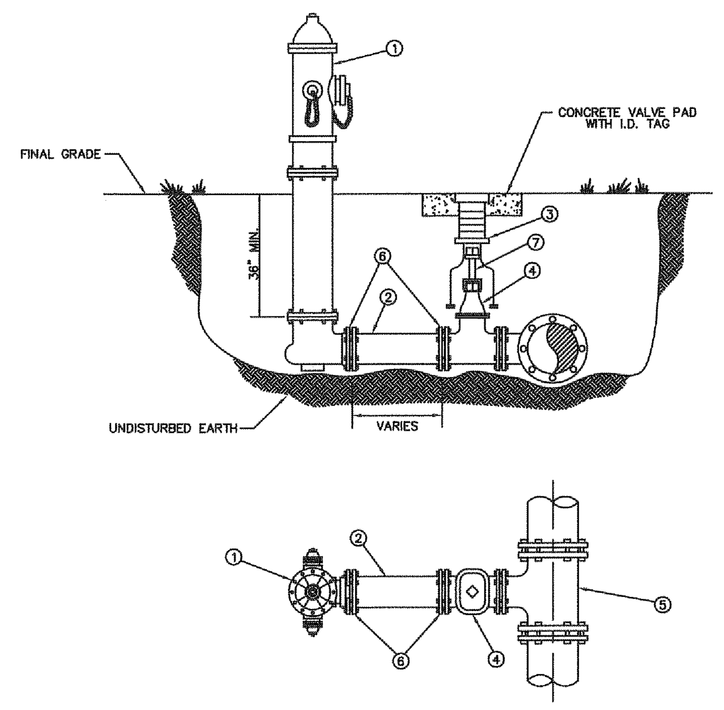

MATERIALS		
ITEM	QUANT.	DESCRIPTION
1	1	HYDRANT, FIRE (5 1/4" VALVE MIN.), PAINTED YELLOW
2	*	6" PIPE, P.V.C. (DR-18)
3	1	BOX, VALVE SLIP TYPE
4	1	6" VALVE, GATE, M.J. RESILIENT WEDGE
5	1	TEE, ANCHORING, M.J.
6	*	6" RESTRAINER GLAND (MEGALUG)
7	*	VALVE EXTENSION ROD, AS NECESSARY (3' MAX. BELOW GRADE)

CREATED 02/24/03
REVISED
FIRE HYDRANT
PERPENDICULAR TO THE MAIN
PROVIDED FOR INFORMATIONAL PURPOSES ONLY. NO MODIFICATIONS WITHOUT WRITTEN PCU APPROVAL
PASCO COUNTY UTILITIES
DETAIL 27

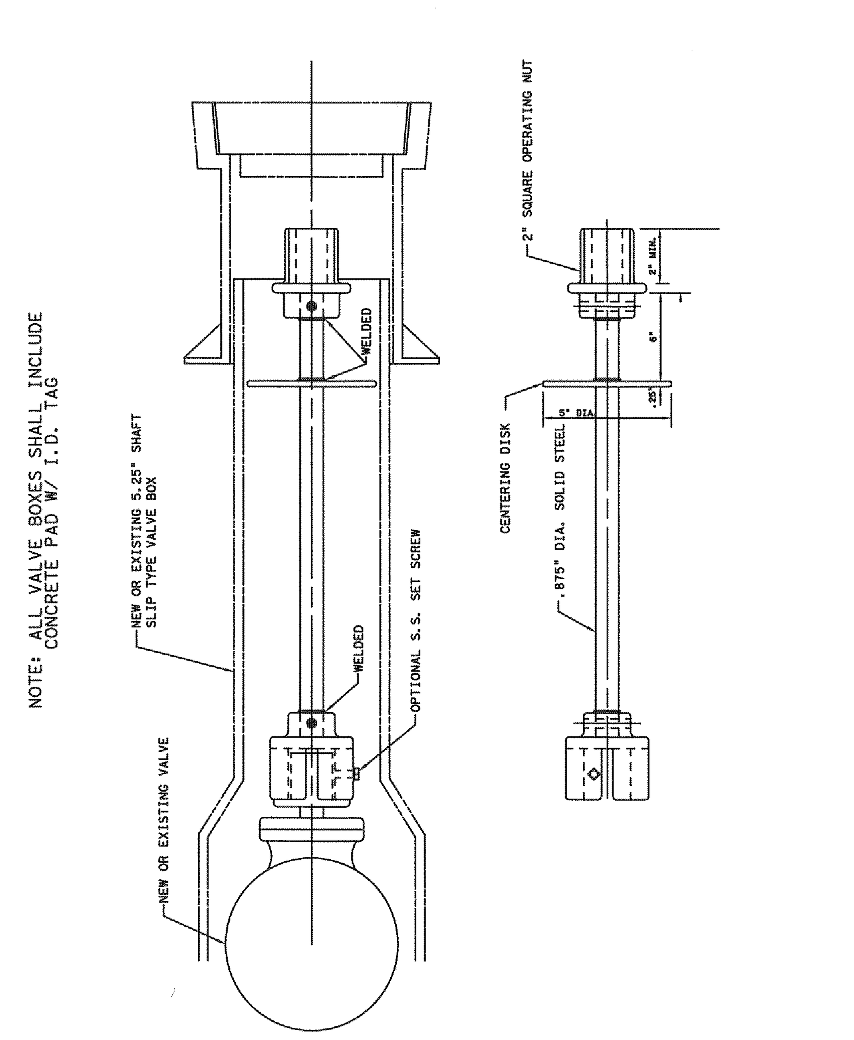

CREATED 02/24/03
REVISED
VALVE EXTENSION RODS
PROVIDED FOR INFORMATIONAL PURPOSES ONLY. NO MODIFICATIONS WITHOUT WRITTEN PCU APPROVAL
PASCO COUNTY UTILITIES
DETAIL 29

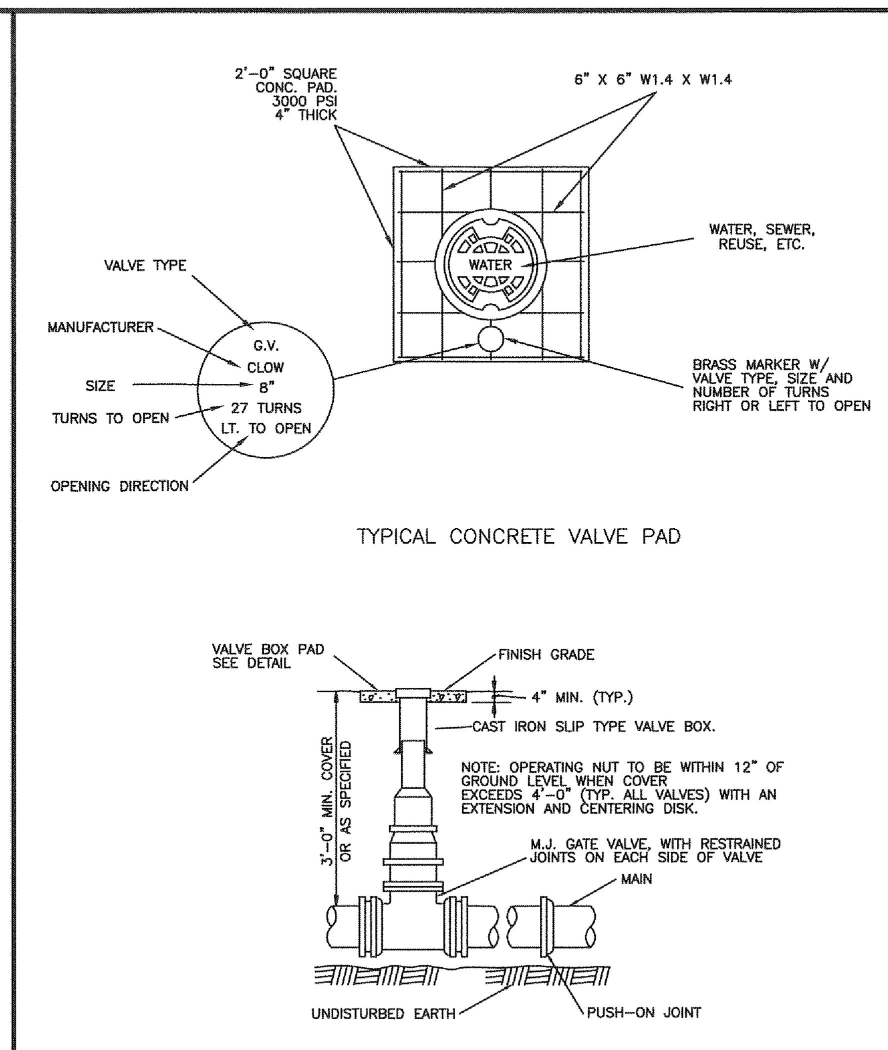

CREATED 02/24/03
REVISED
VALVE BOX DETAIL
SLIP TYPE
PROVIDED FOR INFORMATIONAL PURPOSES ONLY. NO MODIFICATIONS WITHOUT WRITTEN PCU APPROVAL
PASCO COUNTY UTILITIES
DETAIL 30

PIPE RESTRAINT LENGTHS IN FEET COMMON FITTINGS

WATER MAINS - TEST PRESSURE 150 PSI						
		FITTING TYPE				
		11-1/4°	22-1/2°	45°	90°	DEAD END
PIPE SIZE	4"	2'	4'	8'	20'	45'
	6"	3'	6'	12'	28'	63'
	8"	4'	7'	15'	36'	82'
	10"	4'	9'	18'	43'	98'
	12"	5'	10'	21'	50'	116'
	16"	6'	13'	26'	63'	148'
	20"	7'	15'	31'	76'	179'
	24"	9'	17'	36'	87'	208'

FORCE MAINS - TEST PRESSURE 100 PSI						
		FITTING TYPE				
		11-1/4°	22-1/2°	45°	90°	DEAD END
PIPE SIZE	4"	1'	3'	6'	13'	30'
	6"	2'	4'	8'	19'	42'
	8"	2'	5'	10'	24'	55'
	10"	3'	6'	12'	29'	66'
	12"	3'	7'	14'	34'	77'
	16"	4'	8'	18'	42'	99'
	20"	5'	10'	21'	50'	119'
	24"	6'	11'	24'	58'	139'

RESTRAINT LENGTHS ARE MEASURED FROM THE CENTER LINE OF THE FITTING ALONG THE PIPE IN BOTH DIRECTIONS (EXCEPT DEAD ENDS).

CREATED 02/24/03
REVISED
RESTRAINED JOINT TABLE
COMMON FITTINGS
PROVIDED FOR INFORMATIONAL PURPOSES ONLY. NO MODIFICATIONS WITHOUT WRITTEN PCU APPROVAL
PASCO COUNTY UTILITIES
DETAIL 31

PIPE RESTRAINT LENGTHS IN FEET TEES (BRANCH SIDE)

WATER MAINS - TEST PRESSURE 150 PSI										
		BRANCH SIZE								
		3"	4"	6"	8"	10"	12"	16"	20"	24"
RUN SIZE	3"	6'	14'	30'	—	—	—	—	—	—
	4"	2'	11'	28'	44'	—	—	—	—	—
	6"	1'	2'	22'	40'	52'	—	—	—	—
	8"	1'	1'	16'	35'	48'	62'	—	—	—
	10"	1'	1'	10'	30'	44'	58'	83'	—	—
	12"	1'	1'	3'	25'	40'	55'	80'	103'	—
	16"	1'	1'	1'	14'	31'	48'	75'	98'	119'
	20"	1'	1'	1'	2'	22'	40'	69'	94'	116'
	24"	1'	1'	1'	1'	11'	31'	63'	89'	111'

RESTRAINT LENGTHS ARE MEASURED FROM THE CENTER LINE OF THE TEE ALONG THE BRANCH FOR THE DISTANCE INDICATED. A MINIMUM OF 5 FEET OF RESTRAINED PIPE MUST BE INSTALLED ON BOTH RUNS OF THE TEE. MEGALUG TYPE RESTRAINERS ARE REQUIRED ON ALL JOINTS.

CREATED 02/24/03
REVISED
RESTRAINED JOINT TABLE
TEES (BRANCH SIDE)
PROVIDED FOR INFORMATIONAL PURPOSES ONLY. NO MODIFICATIONS WITHOUT WRITTEN PCU APPROVAL
PASCO COUNTY UTILITIES
DETAIL 32

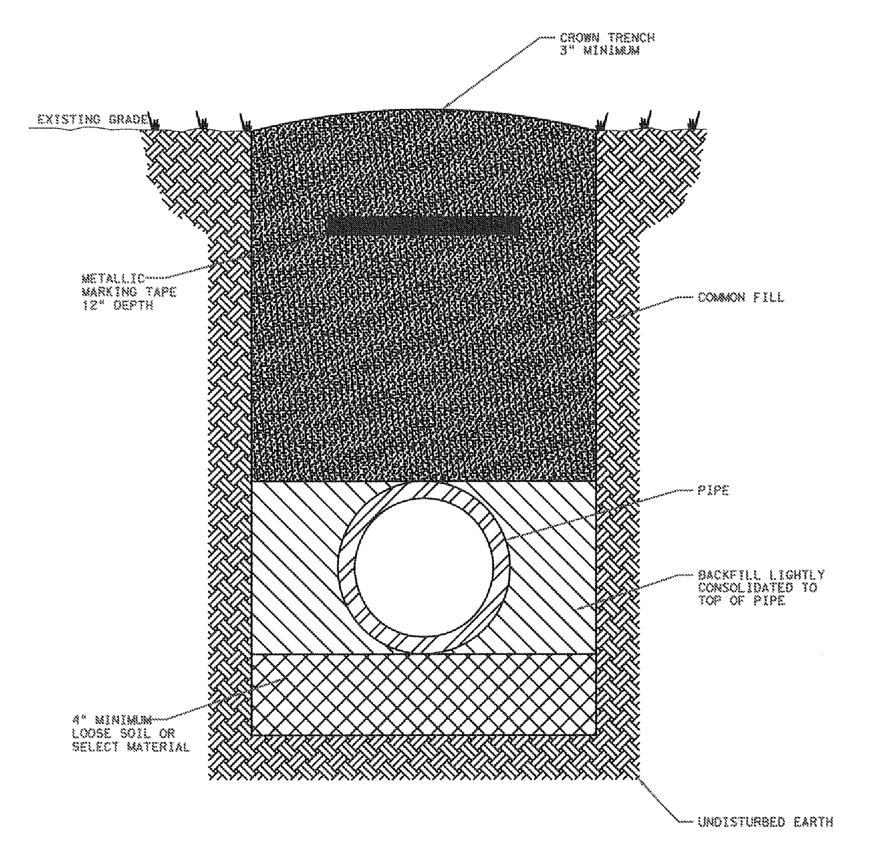

NOTES: -LOOSE SOIL OR SELECT MATERIAL IS NATIVE SOIL EXCAVATED FROM THE TRENCH FREE OF ROCKS AND FOREIGN MATERIAL.
-COMMON FILL TO BE PLACED AND COMPACTED IN 12" LAYERS. ROLLING EQUIPMENT SHALL NOT BE USED FOR COMPACTION UNTIL A MINIMUM OF 18" OF COMMON FILL HAS BEEN PLACED AND COMPACTED OVER THE PIPE. THREE FEET OF FILL SHALL BE PLACED BEFORE A HYDROHAMMER MAY BE USED FOR COMPACTION.

NTS

CREATED 02/24/03
REVISED
PIPE LAYING CONDITIONS
STANDARD UNPAVED AREAS
PROVIDED FOR INFORMATIONAL PURPOSES ONLY. NO MODIFICATIONS WITHOUT WRITTEN PCU APPROVAL
PASCO COUNTY UTILITIES
DETAIL 35

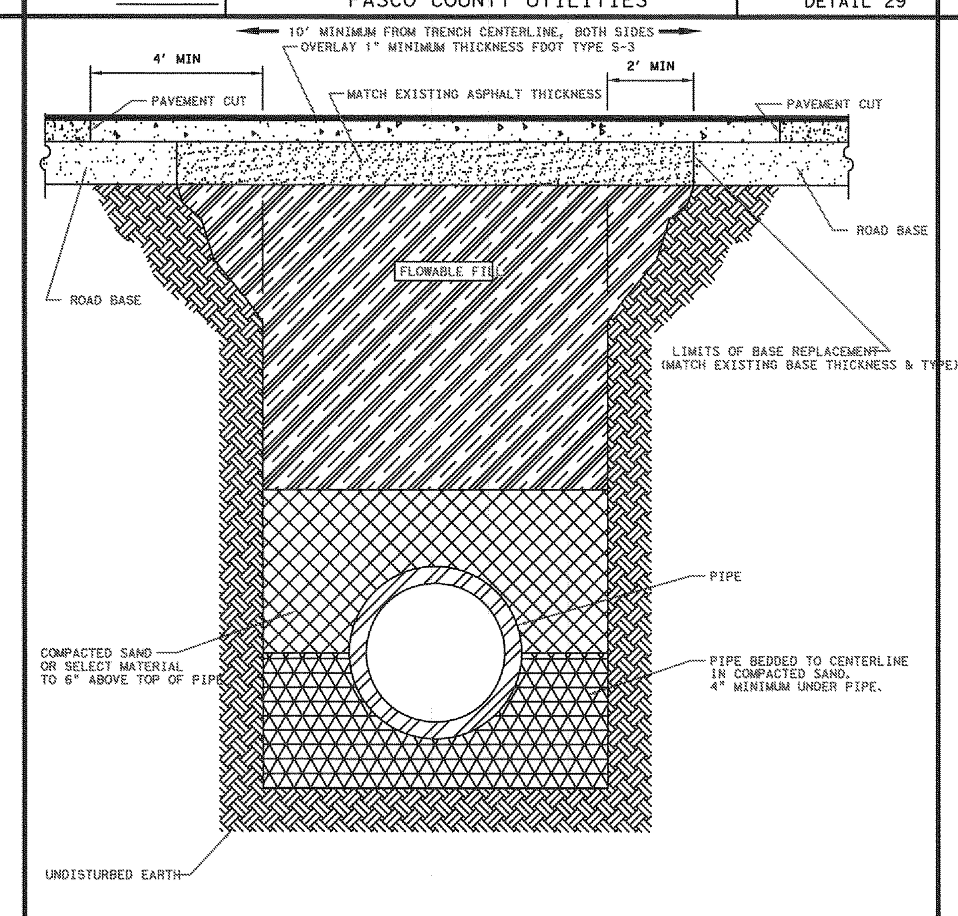

NOTE: -SELECT MATERIAL IS NATIVE SOIL EXCAVATED FROM THE TRENCH FREE OF ROCKS AND FOREIGN MATERIAL.
-COMPACTION TO TOP OF PILE IS TO BE APPROXIMATELY 98 STANDARD PROCTOR, AASHTO T-99.
-EXISTING CONCRETE/ASPHALT PAVEMENT SURFACE AND BASE TO BE CUT SQUARE WITH CONCRETE SAW.

NTS

CREATED 03/06/03
REVISED
PIPE LAYING CONDITIONS
FLOWABLE FILL BACKFILL
STANDARD EXISTING PAVED AREAS & ROADWAYS
PROVIDED FOR INFORMATIONAL PURPOSES ONLY. NO MODIFICATIONS WITHOUT WRITTEN PCU APPROVAL
PASCO COUNTY UTILITIES
DETAIL 36

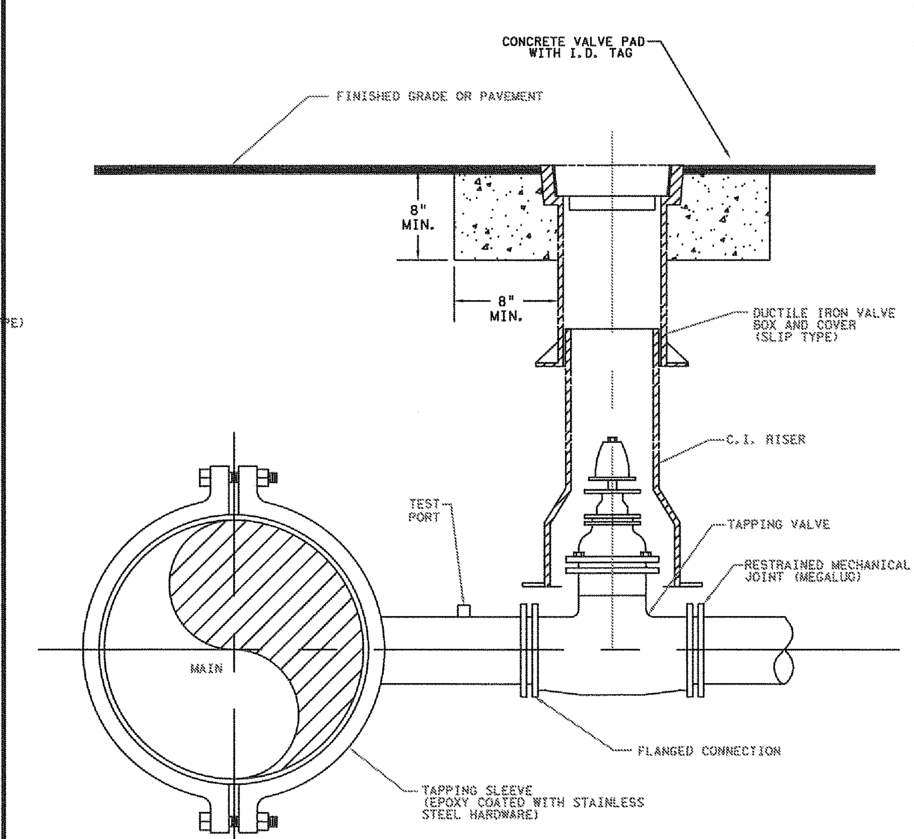

NOTES:
- SADDLE CONNECTION WILL BE TESTED TO 150 PSI PRIOR TO TAPPING MAIN.
- MECHANICAL JOINTS/UNDERGROUND PIPING SHALL BE RESTRAINED AS SPECIFIED BY COUNTY/ENGINEER.
- VALVE EXTENSION ROD SHALL BE UTILIZED, AS NECESSARY, SO THAT VALVE OPERATING NUT IS A MAXIMUM OF 3' BELOW GRADE.

CREATED 02/24/03
REVISED
WATER, REUSE, AND FORCE MAIN
TAPPING DETAIL W/ VALVE LOCATION
PROVIDED FOR INFORMATIONAL PURPOSES ONLY. NO MODIFICATIONS WITHOUT WRITTEN PCU APPROVAL
PASCO COUNTY UTILITIES
DETAIL 37

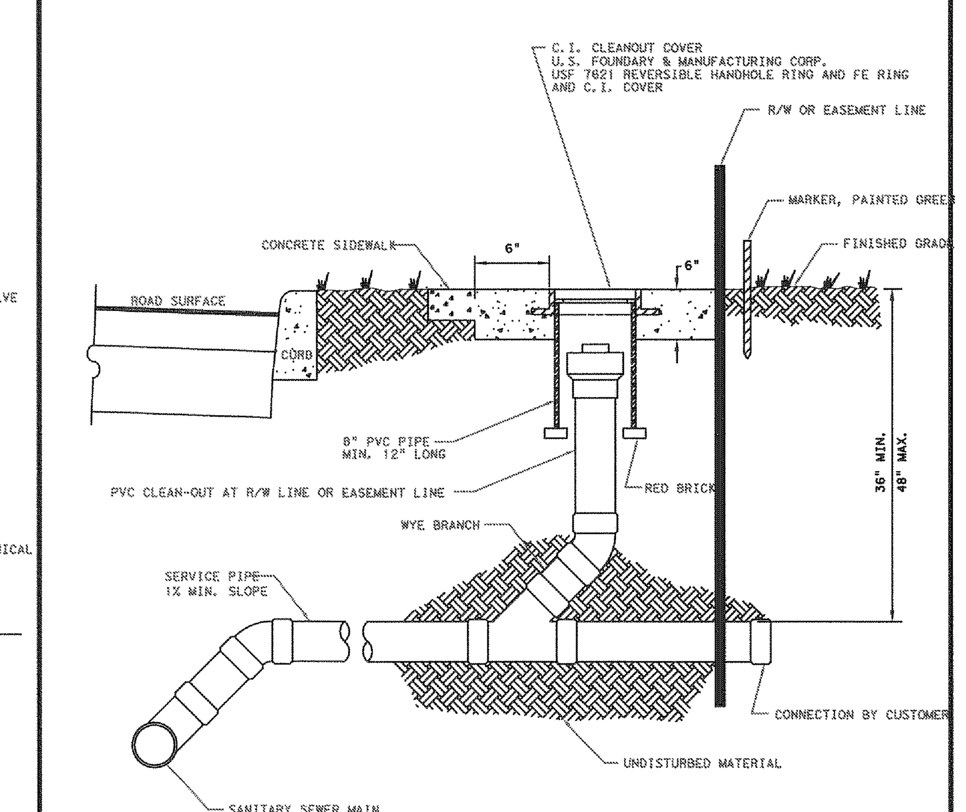

NTS

CREATED 02/24/03
REVISED
SANITARY SEWER - SINGLE WYE CONNECTION
AND TYPICAL CLEAN-OUT
PROVIDED FOR INFORMATIONAL PURPOSES ONLY. NO MODIFICATIONS WITHOUT WRITTEN PCU APPROVAL
PASCO COUNTY UTILITIES
DETAIL 45

PASCO COUNTY STANDARD FIRE PROTECTION NOTES

1. ALL PROJECTS MUST COMPLY WITH PASCO COUNTY HYDRANT ORDINANCE NO. 46-51.
2. FIRE HYDRANTS SHALL BE INSTALLED AND IN SERVICE PRIOR TO THE ACCUMULATION OF COMBUSTIBLES.
3. PER THE NATIONAL FIRE PROTECTION ASSOCIATION, NFPA-1, 16.4.3.1.3: WHERE UNDERGROUND WATER MAINS AND HYDRANTS ARE TO BE PROVIDED, THEY SHALL BE INSTALLED, COMPLETED, AND IN SERVICE PRIOR TO CONSTRUCTION WORK.
4. PER NFPA-1, 18.3.4.1: CLEARANCES OF 7-1/2 FEET IN FRONT OF AND TO THE SIDES OF THE FIRE HYDRANT WITH A 4-FOOT CLEARANCE TO THE REAR MUST BE MAINTAINED AT ALL TIMES.
5. GATED ENTRIES REQUIRE A SIREN OPERATING SYSTEM OR A 3M OPTICOM SYSTEM FOR EMERGENCY ACCESS.

REVISIONS	DATE	BY

This drawing was prepared by Adams Consulting Engineers, Inc. (Adams) as an instrument of service, and shall remain the property of Adams. The information hereon shall be used only by the client to whom the services are rendered and only for the purpose of constructing or installing the work as shown at the designated location and site. Any other use, including (without limitation) any reproduction or alteration, is strictly prohibited, and the user shall hold harmless and indemnify Adams from all liabilities which may arise from such unauthorized use.
© Copyright 2016, Adams Engineering

Adams
27524 Cashford Cr. Suite 101 ■ Wesley Chapel, Florida 33544 ■ (813) 929-7499

OUR LADY OF THE ROSARY MATER DEI ADDITION

UTILITY DETAILS

TIM D. HODES LICENSE No 67017 STATE OF FLORIDA PROFESSIONAL ENGINEER
9-1-16

Certificate Of Authorization: #27614

PROJECT MGR.
-
PROJECT TECH.
RRP
CHECKED BY
TDH
JOB NO.
2009.053
SHEET NO.
C7.1

© Copyright 2016, Adams Engineering

FULL PATH: I:_Projects\2009\2009.053 OLOR Catholic Church\Drawings\Mater Dei Addition\03-Production\!_Projects\2009\2009.053 OLOR Catholic Church\Drawings\Mater Dei Addition\03-Production\L1.0 LANDSCAPE PLAN
PLOTTER: Adobe PDF
PLOT TIME: 9:45:33 AM
PLOT DATE: Thursday, September 01, 2016
PLOTTED BY: Ricardo Ramos
FILENAME: L1.0 LANDSCAPE PLAN.dwg

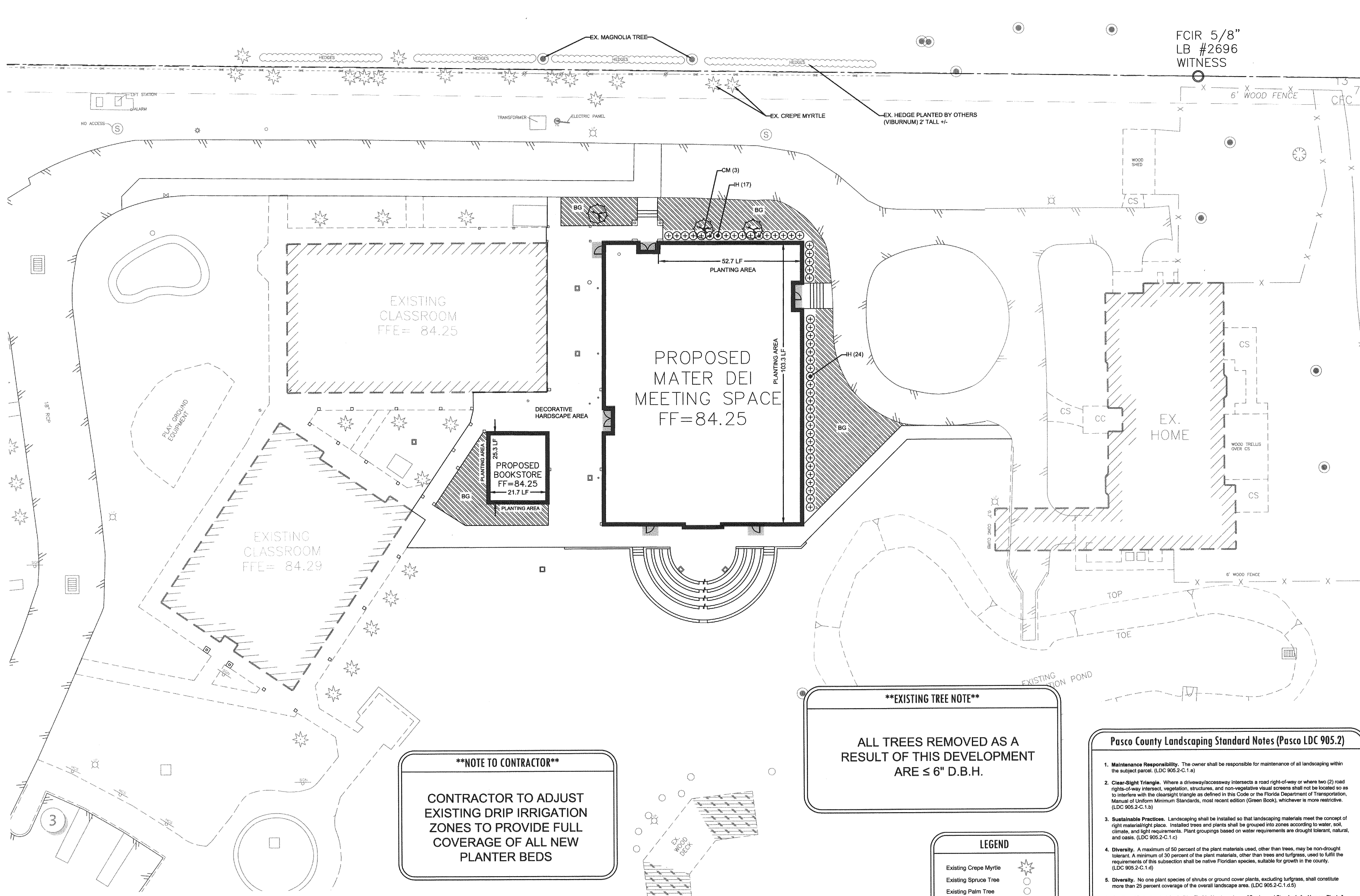

NOTE TO CONTRACTOR

CONTRACTOR TO ADJUST EXISTING DRIP IRRIGATION ZONES TO PROVIDE FULL COVERAGE OF ALL NEW PLANTER BEDS

EXISTING TREE NOTE

ALL TREES REMOVED AS A RESULT OF THIS DEVELOPMENT ARE ≤ 6" D.B.H.

LEGEND

- Existing Crepe Myrtle
- Existing Spruce Tree
- Existing Palm Tree
- Existing Magnolia Tree
- Existing Hedges

Know what's **below.**
Call before you dig.

THESE PLANS ARE SUBJECT TO REVIEW & APPROVAL BY JURISDICTIONAL ENTITIES.

LANDSCAPE PROJECT NOTES

All plant material shall be Florida Grade #1 or better as specified in Florida Grades and Standards for Nursery Plants updated August 2015. All landscape installation shall conform to the Florida Chapter, International Society of Arboriculture Standards for Planting and the Florida Nursery Growers and Landscape Association.

Refer to Sitework Specifications for all information needed for landscape work.

Notify Landscape Architect or designated representative of any layout discrepancies or any condition which may prohibit the installation as shown.

Verify and locate all utilities and site lighting conduits before landscape construction begins. Protection of all utilities is the responsibility of the Contractor.

All landscape planting areas illustrated shall be graded smooth with three inches (3") of topsoil and three inches (3") of compost applied and consistently blended (tilled) to a depth of nine inches (9"). If adequate or sufficient topsoil is not available on site, the Contractor shall provide topsoil per the specifications and approved by the Owner. To obtain final grade, excavation may be necessary to accept the required depth of topsoil/compost mix with surface dressing or mulch. All beds shall be crowned to anticipate settlement and ensure drainage without disrupting surrounding planned drainage paths. Any areas disturbed for any reason prior to final acceptance of the project shall be corrected by the Contractor at no additional expense to the Owner.

All landscaped areas will be irrigated with an underground automatic system.

Quantities shown on these plans are for reference only. Plant spacing is as indicated in the Plant Material List unless otherwise noted. The Contractor has full responsibility to provide coverage in all planting areas as specified.

All trees and shrubs shall be installed per planting details.

Trees shall be planted at least five feet (5') from any utility line or sidewalk, and to the outside of utility easements with a clear ten feet (10') around fire hydrants. Furthermore, planting within areas of turf shall give priority of location to irrigation. Trees, shall not be planted within five feet (5') of a spray head or ten feet (10') of a rotor. Remaining irrigation components shall respect the location of the illustrated landscape design. Shrubs, regardless of type, shall not be planted within thirty inches (30") of bed perimeters.

All plant material shall be maintained in a healthy and growing condition, and must be replaced with similar variety and size if damaged or removed. Container grown plant material is preferred, however ball and burlap material may be substituted as indicated in the plant material list.

All planting beds as designated shall be bordered by Owner approved four inch (4") steel edging w/ 3/16" min. thickness unless bed is bordered by concrete. Steel edging adjacent to decomposed granite beds shall have a 1/4" min. thickness. Terminate edging flush with paved surface with no sharp corners exposed.

A four inch (4") dressing of dark brown shredded hardwood mulch over a 4.1 oz, woven polypropylene, needle-punched fabric or equal weed barrier shall be used in all plant beds and around all trees. Single trees or shrubs shall be mulched to the outside edge of the saucer or landscape island (See planting details).

Fertilize all plants at the time of planting with 10-10-10 time release fertilizer.

SOD PROJECT NOTES

EROSION CONTROL:
Throughout the project and the maintenance period for turfgrass, it is the Contractor's responsibility to maintain the topsoil in place at specified grades. Topsoil and turfgrass losses due to erosion will be replaced by the Contractor until ESTABLISHMENT and ACCEPTANCE is achieved.

SOIL PREPARATION:
All slopes and areas disturbed by construction, except those occupied by buildings, structures, or paving shall be graded smooth and four (4") inches of topsoil applied. If adequate topsoil is not available onsite, the Contractor shall provide topsoil as approved by the Owner. The area shall be dressed to typical sections and plowed to a depth of five (5") inches. Soil shall be further prepared by the removal of debris, weeds and stones larger than 3/4 inch in diameter. After tillage and cleaning, all areas to receive turf shall be leveled, fine graded, and drug with a weighted spike harrow or float drag.

GRASS SOD:
Turfgrass sod shall be 100% Argentine Bahia Grass. Sod shall consist of stolons, leaf blades, rhizomes and roots with a healthy, virile system of dense, thickly matted roots throughout the soil of the sod for a thickness not less than three-quarters (3/4") inch. Sod shall be alive, healthy, vigorous, free of insects, disease, stones, and undesirable foreign materials and grasses. The grass shall have been mowed prior to sod cutting so that the height of grass shall not exceed four (4") inches. Sod shall have been produced on growing beds of clay-loam topsoil. Sod shall not be harvested or planted when its moisture condition is so excessively wet or dry that its survival will be affected. All sod is to be harvested, delivered, and planted within a thirty-six (36) hour period of time. Sod shall be protected from exposure to wind, sun, and freezing. Should installation occur between November and March, sod shall include an over-seed of Annual Rye for a grown-in appearance.

IRRIGATION:
In the absence of an irrigation system or areas beyond the coverage limits of a permanent irrigation system, Contractor shall water sod temporarily to develop adequate growth and establishment before regular maintenance begins. Turf shall be watered until firmly established.

Water shall be furnished by the Contractor with means and methods available to achieve acceptable turf. The water source shall be clean and free of industrial wastes or other substances harmful to the growth of the turf.

MAINTENANCE REQUIREMENTS:
Vegetation should be inspected regularly to ensure that plant material is established properly and remains healthy. Mowing, trimming and supervision of water applications shall be the responsibility of the Contractor until the Owner or Owner's Representative accepts and assumes regular maintenance.

Pasco County Landscaping Standard Notes (Pasco LDC 905.2)

1. **Maintenance Responsibility.** The owner shall be responsible for maintenance of all landscaping within the subject parcel. (LDC 905.2-C.1.a)
2. **Clear-Sight Triangle.** Where a driveway/accessway intersects a road right-of-way or where two (2) road rights-of-way intersect, vegetation, structures, and non-vegetative visual screens shall not be located so as to interfere with the clearsight triangle as defined in this Code or the Florida Department of Transportation, Manual of Uniform Minimum Standards, most recent edition (Green Book), whichever is more restrictive. (LDC 905.2-C.1.b)
3. **Sustainable Practices.** Landscaping shall be installed so that landscaping materials meet the concept of right material/right place. Installed trees and plants shall be grouped into zones according to water, soil, climate, and light requirements. Plant groupings based on water requirements are drought tolerant, natural, and oasis. (LDC 905.2-C.1.c)
4. **Diversity.** A maximum of 50 percent of the plant materials used, other than trees, may be non-drought tolerant. A minimum of 30 percent of the plant materials, other than trees and turfgrass, used to fulfill the requirements of this subsection shall be native Floridian species, suitable for growth in the county. (LDC 905.2-C.1.d)
5. **Diversity.** No one plant species of shrubs or ground cover plants, excluding turfgrass, shall constitute more than 25 percent coverage of the overall landscape area. (LDC 905.2-C.1.d.5)
6. **Quality.** All plant materials shall be Florida No. 1 grade per "Grades and Standards for Nursery Plants," Florida Department of Agriculture and Consumer Services (FDACS), which is incorporated herein by reference. (LDC 905.2-C.2.a)
7. **Avoid Easements.** Trees shall not be planted within any easement so as to interfere with the use of that easement, nor under any present or planned overhead utility, nor in any rights-of-way without County approval through the associated review process. (LDC 905.2-C.3.c)
8. Mulch shall be used in conjunction with living plant materials so as to cover exposed soil. Mulch shall be installed to a minimum depth of three (3) inches. The mulch should not be placed directly against the plant stem or tree trunk. Mulch shall not be required for annual beds. Stone or gravel may be used to cover a maximum of 20 percent of the landscaped area. (LDC 905.2-C.3.d)
9. **Quality Practices.** All landscaping shall be installed in accordance with standards and practices of the Florida Nursery, Growers, and Landscape Association and the Florida Chapter of the International Society of Arboriculture. (LDC 905.2-C.3.e)
10. All portions of a lot upon which development has commenced, but not continued for a period of 30 days, shall be planted with a grass species or ground cover to prevent erosion and encourage soil stabilization. Adequate coverage, so as to suppress fugitive dust, shall be achieved within 45 days. (LDC 905.2-C.3.g)
11. All required landscaping shall be maintained in a healthy condition in perpetuity in accordance with this Code. (LDC 905.2-E.2)
12. Ongoing maintenance to prevent the establishment of prohibited exotic species is required. (LDC 905.2-E.4)

LANDSCAPE REQUIREMENTS for Pasco County, FL

C. General Standards
1. Design
d. Diversity
(1) A maximum of fifty (50) percent of the plant materials used, other than trees, may be nondrought tolerant. The use of turfgrass varieties with excellent drought tolerance may exceed the fifty (50) percent limitation.
(2) A minimum of thirty (30) percent of the plant materials, other than trees and turfgrass, shall be native Floridian species suitable for growth in the County.
(3) Tree diversity shall be required based on the number of required trees on site (see Table 905.2-B).

TABLE 905.2-B	
Required Number of Trees	Required Species
21-25	5

(4) Where more than one (1) species is required, even distribution shall be strived for and subject to County approval through the associated review process.

(5) No one (1) plant species of shrubs or ground cover plants or combination thereof, excluding turfgrass, shall constitute more than twenty-five (25) percent coverage of the overall landscape area.

D. Specific Planting Requirements
1. Generally. The following general standards and the specific planting standards below shall apply to all sites:
a. All portions of each site, which are not devoted to buildings, sidewalks, paving, or special landscape features shall be grassed. However, no more than thirty (30) percent of the required landscape area may be grassed; the balance shall be landscaped in shrubs and ground cover plants.

3. Vehicular Use Areas. Landscaping and buffering of vehicular use areas shall be in accordance with Table 905.2.C.

Table 905.2.C
Landscape Area Required: A minimum of ten (10) percent of the on-site, vehicular use area shall be devoted to interior landscaped area.

Shade Trees Required: A minimum of one (1) shade tree for every 200 square feet of required interior landscaped area.

Landscape Islands: A minimum of one (1) landscape island per every ten (10) parking spaces.

Plantings Required and Location: A minimum of one (1) shade tree with shrubs, dwarf shrubs, and/or other ground cover plants per each island. Other than trees, planting materials shall naturally grow no taller than thirty (30) inches. Trees shall be set back from drive aisles a minimum of four (4) feet.

Landscaping Required for Terminal Islands: Shade trees, shrubs, dwarf shrubs, and ground cover plants shall be used in terminal islands. If a large tree with a mature canopy of thirty-five (35) feet or more is proposed in a double island, only one (1) such tree shall be planted in the island.

4. Building Perimeters
Building perimeter landscaping shall be placed such that a minimum of fifty (50) percent of the building perimeter is landscaped.

a. All shopping center, retail, office, apartment, condominium, townhouse, clubhouse, and similar uses shall provide perimeter building landscaped beds in a minimum amount equal to ten (10) percent of the proposed building ground-level floor area.

b. These building perimeter landscapings shall be located adjacent to the building and shall consist of landscaped areas, raised planters, or planter boxes that are a minimum of five (5) feet wide. These landscaped areas shall include shade trees, understory trees and/or palms, shrubs, dwarf shrubs, and ground cover plants.

5. Perimeter Landscape Buffering and Screening:
Type A Buffer: Ten (10) feet wide.
Single row of trees; maximum sixty (60) feet on center
Continuous row of evergreen shrubs

Type D Buffer: Ten (10) feet wide
Shade and understory trees shall be planted of thirty (30) feet apart. Minimum spacing twenty (20) feet; maximum forty-five (45) feet. Where a vehicular use area abuts the right-of-way, the buffer shall also contain an earthen berm a minimum of eighteen (18) inches in height; shall be planted so as to form a continuous, unbroken, solid visual screen within one (1) year of time of plantings; and ground cover plants.

E. Landscape Maintenance and Prohibitions
1. All landscaping, including those areas located in the public right-of-way as approved through the applicable development review process, shall be maintained by an entity other than the County.
2. All required landscaping shall be maintained in a healthy condition in perpetuity in accordance.
3. All installed landscaping shall be neat and orderly in appearance and kept free of refuse, debris, disease, pests, and weeds, and shall be fertilized and irrigated as needed to maintain plants in a healthy condition.
4. Ongoing maintenance to prevent the establishment of prohibited, invasive species is required.
5. Any plant materials of whatsoever type and kind required by these regulations shall be replaced within thirty (30) days of their demise and/or removal.
6. Paving, treating, or covering a required landscape area in any way that renders it impervious is prohibited.
7. Parking of vehicles shall not be permitted in required landscape areas.

Plant Material List

SYM.	KEY	QTY.	COMMON NAME / SCIENTIFIC NAME	O.C.	ROOT	SIZE	HEIGHT	SPREAD	COMMENT	FLORIDA NATIVE	DROUGHT TOLERANT
	CM	3	Tuskegee Crape Myrtle / Lagerstroemia 'tuskegee'	N/A	Cont.	3" cal.	8' min.	18" min.	Tree Form, Multi-trunk, 3-cane min., Healthy, Full	No	Yes
⊕	IH	41	Dwarf Indian Hawthorn / Raphiolepis indica 'Dwarf'	36"	Cont.	5 gal.	24" min.	18" min.	Full, Healthy, Branching to Ground	No	No
	BG	2,583 sf	Bahia Grass Sod / Paspalum Notatum	-	-	-	-	-	Healthy & Disease Free	Yes	Yes

REVISIONS	DATE	BY

This drawing was prepared by Adams Consulting Engineers, Inc. (Adams) as an instrument of service, and shall remain the property of Adams. The information hereon shall be used only by the client to whom the services are rendered and only for the purpose of constructing or installing the work as shown at the designated location and site. Any other use, including (without limitation) any reproduction or alteration, is strictly prohibited, and the user shall hold harmless and indemnify Adams from all liabilities which may arise from such unauthorized use.
© Copyright 2016, Adams Engineering

Adams
27524 Cashford Cr. Suite 101 ■ Wesley Chapel, Florida 33544 ■ (813) 929-7499

OUR LADY OF THE ROSARY MATER DEI ADDITION

LANDSCAPE PLAN

TIM D. HODES LICENSE No 67017 STATE OF FLORIDA PROFESSIONAL ENGINEER 9-1-16

Certificate Of Authorization: #27614

PROJECT MGR.
-
PROJECT TECH.
RRP
CHECKED BY
TDH
JOB NO.
2009.053
SHEET NO.
L1.0

© Copyright 2016, Adams Engineering

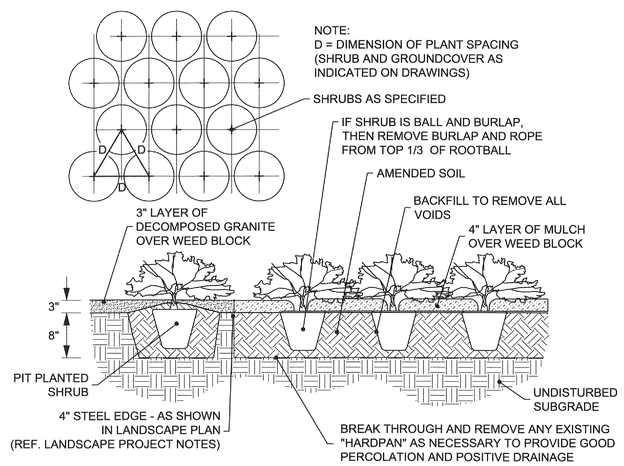

NOTE:
1. SEE LANDSCAPE NOTES FOR THE TYPE OF WEED BLOCK AND MULCH MATERIAL TO USE.
2. OMIT WEED BLOCK WHEN PLANT SPACING IS 18" O.C. OR LESS

SHRUB PLANTING AND SPACING

N.T.S.

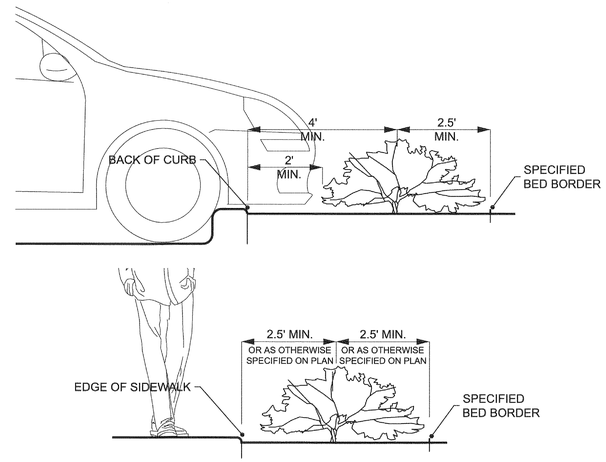

NOTE: SEE LANDSCAPE NOTES AND SHRUB PLANTING AND SPACING DETAIL FOR INSTALLATION.

SHRUB DISTANCE FROM EDGE OF BED

N.T.S.

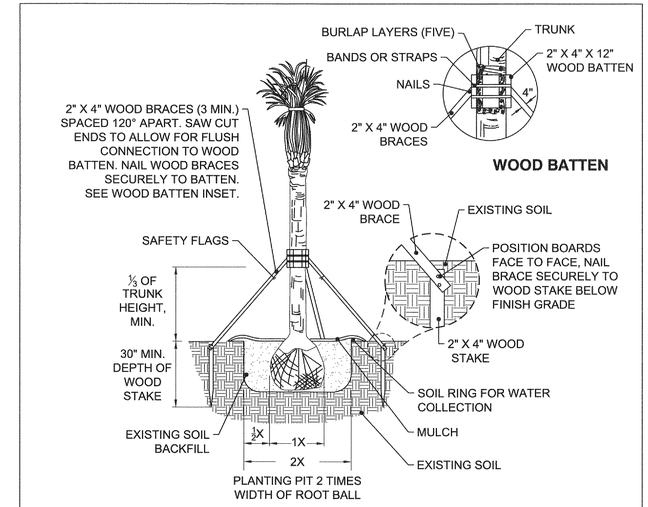

PALM TREE STAKING

N.T.S.

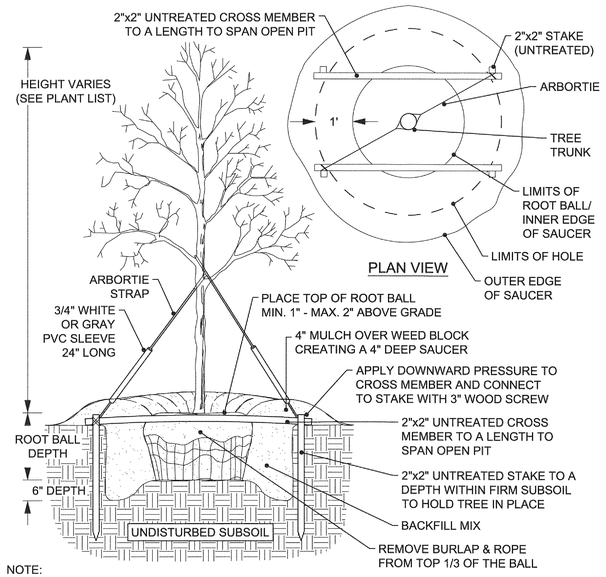

NOTE:
1. ARBORTIE SHOULD ONLY BE USED AS A REMEDIAL MEANS TO PLUMB A TREE WHEN THE PRIMARY BELOW GRADE STAKING CAN NO LONGER BE ADJUSTED EFFECTIVELY AND CONDITIONS ARE WARRANTED BY THE LANDSCAPE ARCHITECT.
2. SEE LANDSCAPE NOTES FOR THE TYPE OF WEED BLOCK AND MULCH MATERIAL TO USE.

TREE PLANTING

N.T.S.

REVISIONS	DATE	BY

This drawing was prepared by Adams Consulting Engineers, Inc. and is an instrument of service, and shall remain the property of the undersigned. The information hereon shall be used only for the purpose for which the services are rendered and only for the project for which the services regarding the work as shown on this drawing are rendered. Any other use, including without limitation, any reproduction or alteration, is strictly prohibited, and Indemnity Adams from all liability and expenses resulting from such unauthorized use.
© Copyright 2016, Adams Engineers

Adams
27524 Cashford Cir. Suite 101 ■ Wesley Chapel, Florida 33544 ■ (813) 929-7499

OUR LADY OF THE ROSARY MATER DEI ADDITION

LANDSCAPE DETAILS

TIM D. HODES LICENSE No 67017 STATE OF FLORIDA PROFESSIONAL ENGINEER
9-1-16

Certificate Of Authorization: #27614

PROJECT MGR.	-
PROJECT TECH.	RRP
CHECKED BY	TDH
JOB NO.	2009.053
SHEET NO.	L1.1

© Copyright 2016, Adams Engineering

FULL PATH: I:_Projects\2009\2009.053 OLOR Catholic Church\Drawings\Mater Dei Addition\03-Production\L1 Projects\2009\2009.053 OLOR Catholic Church\Drawings\Mater Dei Addition\03-Production\L1.0 LANDSCAPE PLAN
PLOTTER: Adobe PDF
PLOT TIME: 4:57:45 PM
PLOT DATE: Wednesday, August 31, 2016
PLOTTED BY: Ricardo Ramos
FILENAME: L1.0 LANDSCAPE PLAN.dwg